ENGINEERING
TOMORROW

Installation guide

Pressure switch
KPU

060R9767

060R9767

Application
KPU pressure switches are for use on commercial refrigeration and air conditioning systems to give protection against excessively low suction pressure or excessively high discharge pressure.

They are also used for starting and stopping refrigeration compressors and fans on air-cooled condensers.
KPU pressure switches are fitted with the Single-Pole Single-Throw (SPST) or Single-Pole Double-Throw (SPDT) switches, suitable for direct as well as indirect (with a contactor) control.

KPU pressure switches are available in several pressure ranges and are compatible with refrigerants listed below. KPU 6W and KPU 6B are fail safe switches for high pressure refrigerants. Standard enclosure is ~NEMA 1.

Refrigerants:
R22, R134a, R404A, R407A, R407C, R407F, R410A*), R422B, R422D, R438A, R448A, R449A, R450A, R452A, R507A, R513A

For complete list of approved refrigerants, go to http://products.danfoss.com/all-products/

*) R410A only for KPU 6W and KPU 6B

Product Specification

Application	Type	Code number		Reset	Contact system		Regulating range [inHg] [psig]	Differential Δp [psi]	Max. working pressure [psig]	Max. testing pressure [psig]	Ambient temp. [°F]
		¼ in male flare	36 in. cap. tube w. ¼ in flare nut		Type	Switch action					
Low Pressure Switch Cut Out on pressure fall	KPU 1	060-5231	060-5233	Auto.	SPDT	—	6 in. – 108	10 – 60	250	290	-40 – 122 (175 for max. 2 hours)
	KPU 1	060-5236	—	Auto.	SPST(NO)	close High open Low	6 in. – 108	10 – 60	250	290	
	KPU 2	060-5237	060-5235	Auto.	SPST(NO)	close High open Low	6 in. – 73	6 – 30	250	290	
	KPU 2	060-5239	060-5240	Auto.	SPDT	—	6 in. – 73	6 – 30	250	290	
	KPU1B	060-5232	060-5234	Man (Min.)	SPDT	—	28 in. – 100	10 fixed	250	290	
Fan switch	KPU 5	060-5241	060-5242	Auto.	SPST(NO)	close High open Low	100 – 465	25 – 85	510	530	
High Pressure Switch Cut Out on pressure rise	KPU 6W	060-5243	060-5245	Auto.	SPDT	—	100 – 600	58 – 145	675 / 610*	725	
	KPU 6B	060-5244	060-5246	Man. (Max.)	SPDT	—	100 – 600	60 fixed	675 / 610*	725	

* 610psig - MWP for products used according to 2014/68/EU PED directive.

Installation
Select an accessible location, where the switch and pressure connection line will not be subject to damage.

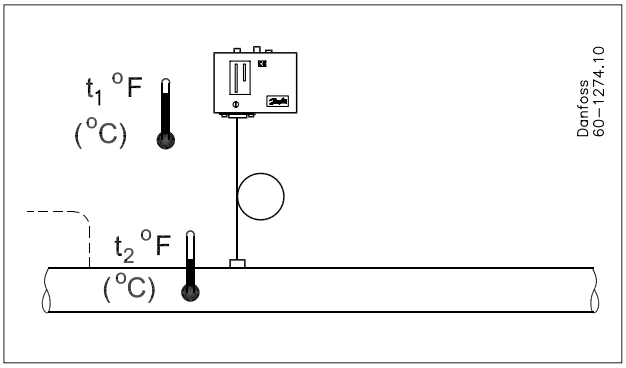

IMPORTANT:
Mount the pressure switch in a position that will allow drainage of liquids away from switch bellows. Pressure connection of the switch must always be located on the top side of the refrigerant line.
This reduces the possibility of oil, liquids, or sediment collecting in the bellows, which could cause the switch malfunction.

IMPORTANT:
Ensure the ambient temperature for the pressure switch is higher than the refrigeration line as that will prevent liquid migration and accumulation in the bellows.

Mount the KPU pressure switch on a bracket or on a completely flat surface.
Mounting to an uneven surface might cause improper switch operation.
For bracket mounting use only the 10-32x3/16 screws provided with the switch. If other screws are used function of the pressure switch might be disturbed (they may not protrude into the switch more than $^1/_8$ in.).

Use only the mounting holes provided; no other holes are to be added to the switch.

IMPORTANT:
Pressure pulsations in the refrigeration system reduce life time of the bellows and might disturb switch function. Pressure pulsations should always be effectively damped e.g. by connection the pressure switches to the refrigeration system through a capillary tube.

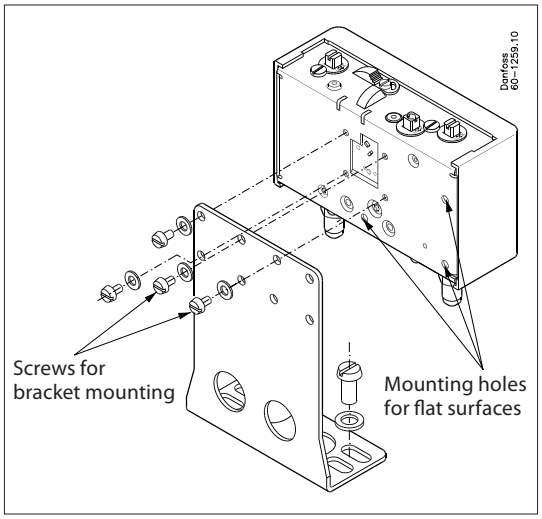

Recommendations for capillary tube and flare connections:

1. Ensure self-draining of the capillary tube to minimize clogging.
2. Coil excess capillary tube into smooth, circular coils (approx. 3 inch diameter). The coiled tube should be securely fastened in order to prevent possible damage due to vibration.
3. Leave a little slack in the capillary tube as it helps to damp mechanical vibrations.
4. Avoid sharp bends as well as re-bending of the capillary tube on the same point as it weakens the material, increasing the risk of crack.
5. Never allow for contact between the capillary tube and sharp or abrasive objects as during vibrations the tube could be damaged due to friction.
6. Purge the piping before connecting pressure switches.

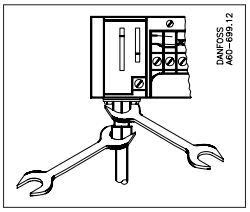

7. Always use two wrenches tightening the flare nut on the pressure switch. One wrench should support the connector while the second wrench is used to tighten the nut.
8. Do not over tighten flare nuts as it may damage the threads causing leaks.
9. Protect the capillary tube from damage caused by vibrations from compressor:
   – when the switch unit is mounted directly on the compressor, the capillary must be secured to the compressor so that everything vibrates as a whole.
   – when the switch is mounted remote from the compressor, make the pressure connections away from the compressor.
   – when the switch is mounted remote from the compressor and the pressure connections have to be on the compressor, then damping coils must be used between the compressor and the pressure switch.

NOTE:
After installing the pressure switch, evacuate the plant in accordance with applicable EPA and other regulations, to remove air, moisture, and other contaminants.

Wiring

Electrical ratings according to UL regulations

120 V AC	24 FLA, 144 LRA – make only
240 V AC	24 FLA, 144 LRA – make only
240 V DC	12 W pilot duty

European electrical ratings according to EN 60947

AC1	AC3	AC15	LR	DC13
16 A	16 A	10 A	112 A	12 W
400 V				220 V

CAUTION:
Disconnect power supply before wiring connections are made or service to avoid possible electrical shock or damage to equipment.
Do never touch live parts with your fingers or with any tool.

NOTE:
All wiring should conform to the National Electrical Code and local regulations.
Use copper wire only.
Use terminal screws furnished in the contact block.
Do not exceed tightening torque 20 lb. in (2.3 Nm).
Do not exceed electrical ratings for the switch.

The terminal block as well as grounding screw are accessible after dismounting of the front cover.

© Danfoss | DCS (sb) | 2019.12

Wiring Option A:
– Low Pressure Switch Cut Out on pressure fall
– Condenser Fan Cycling

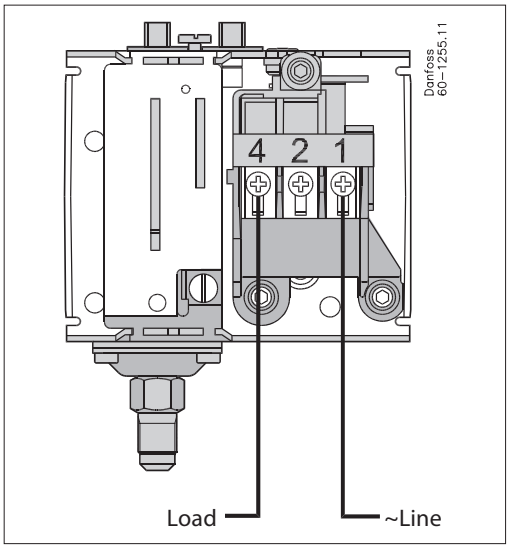

Wiring Option B:
– High Pressure Switch Cut Out on pressure rise

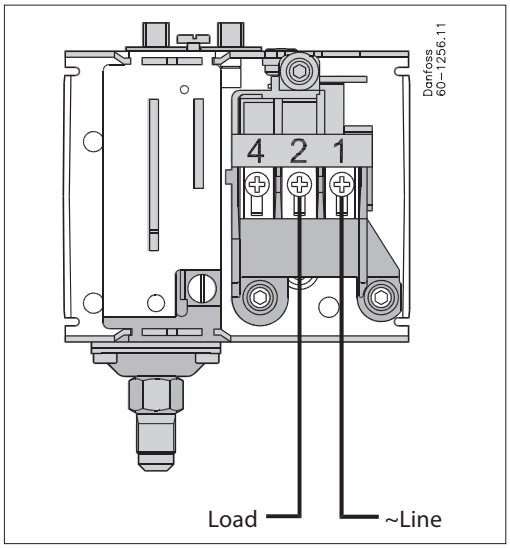

Wire dimensions: 10 AWG max.
Cable entry: $^{7}/_{8}$ in. cable entry for ½ in. male pipe thread connection (conduit boss) or similar (Pg13.5 or Pg16) screwed cable entry.

Contact function test (Manual trip)
When the electrical leads are connected the contact function can be manually tested regardless of pressure condition in the system. The manual trip lever is located in the left side of the KPU. It must be operated with fingers only. Do not use screwdriver as it will damage the switch.

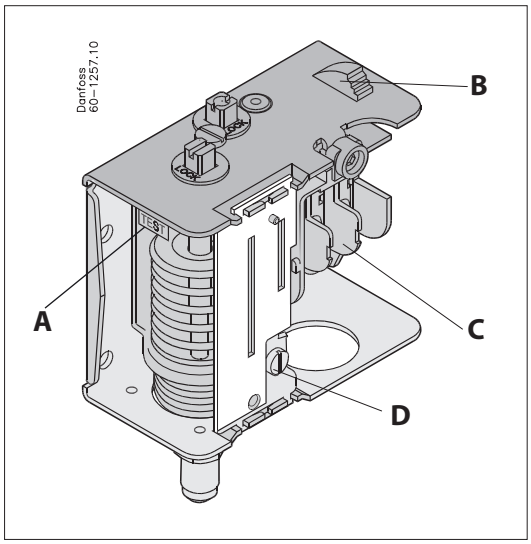

A: Manual trip. Press the lever up. USE FINGERS ONLY!
B: Manual reset button
(available only for contols with manual reset function)
C: Terminal block
D: Grounding screw

NOTE:
While operating the manual trip on KPU switches with manual reset it is necessary to push the reset knob.

Adjustment
Before adjustment, loosen the locking plate.
For setting use the Universal Refrigeration Wrench.

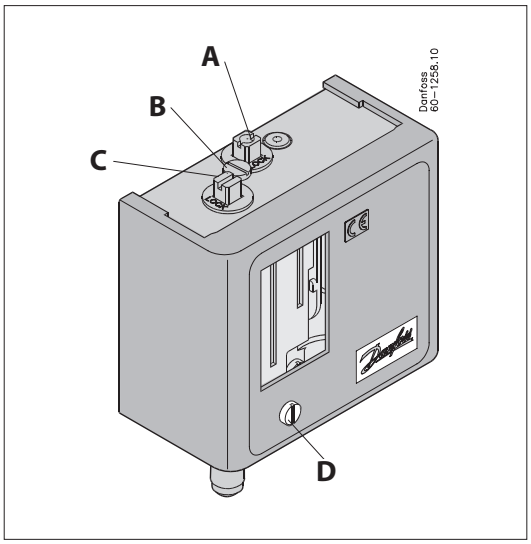

A: Differential adjusting screw
B: Locking plate
C: Range adjusting screw
D: Cover screw

NOTE:
Adjust the pressure switch with settings specified by the manufacturer of the controlled quipment.
Do not exceed the pressure ratings of the controlled equipment or any of its components when checking pressure switch operation or operating the controlled equipment.
Do not adjust pointers beyond the highest or lowest indicator marks on the scale plate, as this may cause inaccurate switch operation.

IMPORTANT:
The scale plate is only for reference and for more precise setting a pressure gauge should be used.

IMPORTANT:
After installing and adjusting pressure switch run the controlled equipment several times (at least three cycles) at normal operating conditions.

Adjustment: Low Pressure Switch

Cut out on pressure fall with automatic reset.

Scale plate directly indicates the Cut In and the Differential set points.

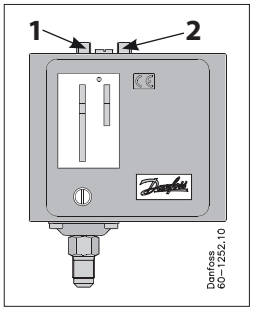

1. Set Cut In by adjusting range screw. Turn the screw clockwise to lower the set point.

2. Then set Differential by adjusting differential screw. Turn the screw clockwise to increase the Differential.

3. The Cut Out setting equals the Cut In less the Differential: CUT OUT = CUT IN - DIFFERENTIAL

NOTE:
Cut Out set point must be above absolute vacuum! If the Differential is set too high then the switch will not stop the compressor.

Adjustment: Low Pressure Switch

Cut out on pressure fall with manual reset.

Scale plate directly indicates the Cut Out set point. There is no pointer for the Differential.
The Differential pressure value is fixed and printed on the scale plate.

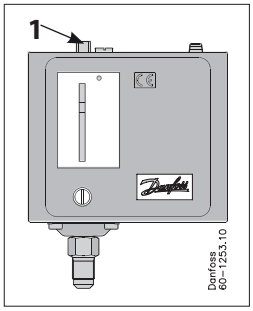

1. Set Cut Out by adjusting range screw. Turn the screw clockwise to lower the set point.

2. The Cut In setting equals the Cut Out plus the Differential: CUT IN = CUT OUT + 10 psi

Adjustment: Condenser Fan Cycling

Scale plate directly indicates the Cut In and the Differential set points.

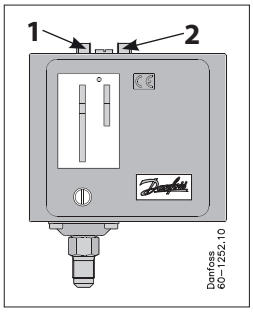

1. Set Cut In by adjusting range screw. Turn the screw clockwise to lower the set point.

2. Then set Differential by adjusting differential screw. Turn the screw clockwise to increase the Differential.

3. The Cut Out setting equals the Cut In less the Differential: CUT OUT = CUT IN - DIFFERENTIAL

Adjustment: High Pressure Switch

Cut Out on pressure rise with automatic reset.

Scale plate directly indicates the Cut Out and the Differential set points.

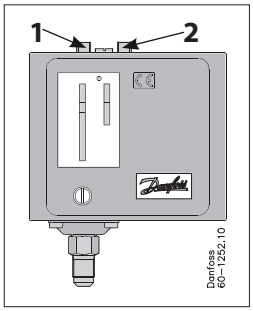

1. Set Cut Out by adjusting range screw. Turn the screw clockwise to lower the set point.

2. Then set Differential by adjusting differential screw. Turn the screw clockwise to decrease the Differential.

3. The Cut In setting equals the Cut Out less the Differential: CUT IN = CUT OUT - DIFFERENTIAL

Adjustment: High Pressure Switch

Cut Out on pressure rise with manual reset.

Scale plate directly indicates the Cut Out set point.
There is no pointer for the Differential.
The Differential pressure value is fixed and printed on the scale plate.

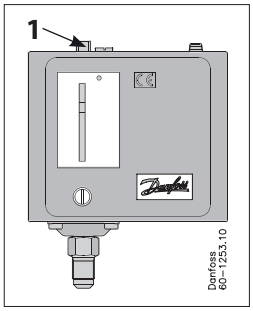

1. Set Cut Out by adjusting range screw. Turn the screw clockwise to lower the set point.

2. The Cut In setting equals the Cut Out less the Differential: CUT IN = CUT OUT - 60 psi

© Danfoss | DCS (sb) | 2019.12