SERVICE PARTS LIST

BULLETIN NO. 54-24-2990

SPECIFY CATALOG NO. AND SERIAL NO. WHEN ORDERING PARTS			REVISED BULLETIN	DATE Aug. 2022
M18™ FUEL™ Brushless Hammer-Drill			WIRING INSTRUCTION **SEE PAGE 2**	
CATALOG NO. 2904-20	STARTING SERIAL NO.	**M64A**		

FIG.	PART NO.	DESCRIPTION OF PART	NO. REQ.
1	05-88-0019	M8.0 x 1 LH T-40 Chuck Screw	(1)
2	----------	1/2" Keyless Chuck	(1)
12	06-82-7337	M4 x 20mm Pan Hd. ST T-10 w/Washer Scr.	(4)
19	42-92-7012	Back Cap	(1)
20	06-82-6351	M3 x 16mm Pan Hd. ST T-10 Screw	(9)
22	----------	Lens	(1)
23	----------	Right Housing Halve - Cover	(1)
24	42-42-7003	Forward/Reverse Shuttle	(1)
25	06-82-2367	M3 x 38mm Pan Hd. ST T-10 Screw	(2)
26	----------	Bit Holder	(1)
27	06-82-2500	#6-32 x 7mm Pan Hd. Machine Screw	(2)
28	----------	Belt Clip	(1)
29	44-10-0160	Detent Spring	(1)
30	45-24-2670	Speed Selector	(1)
31	----------	Left Housing Halve - Support	(1)
59	44-10-4020	Shift Spring	(1)

EXAMPLE: 00 | 0 — Component Parts (Small #) Are Included When Ordering The Assembly (Large #).

See page 3 for fastener tightening procedure and torque specifications.

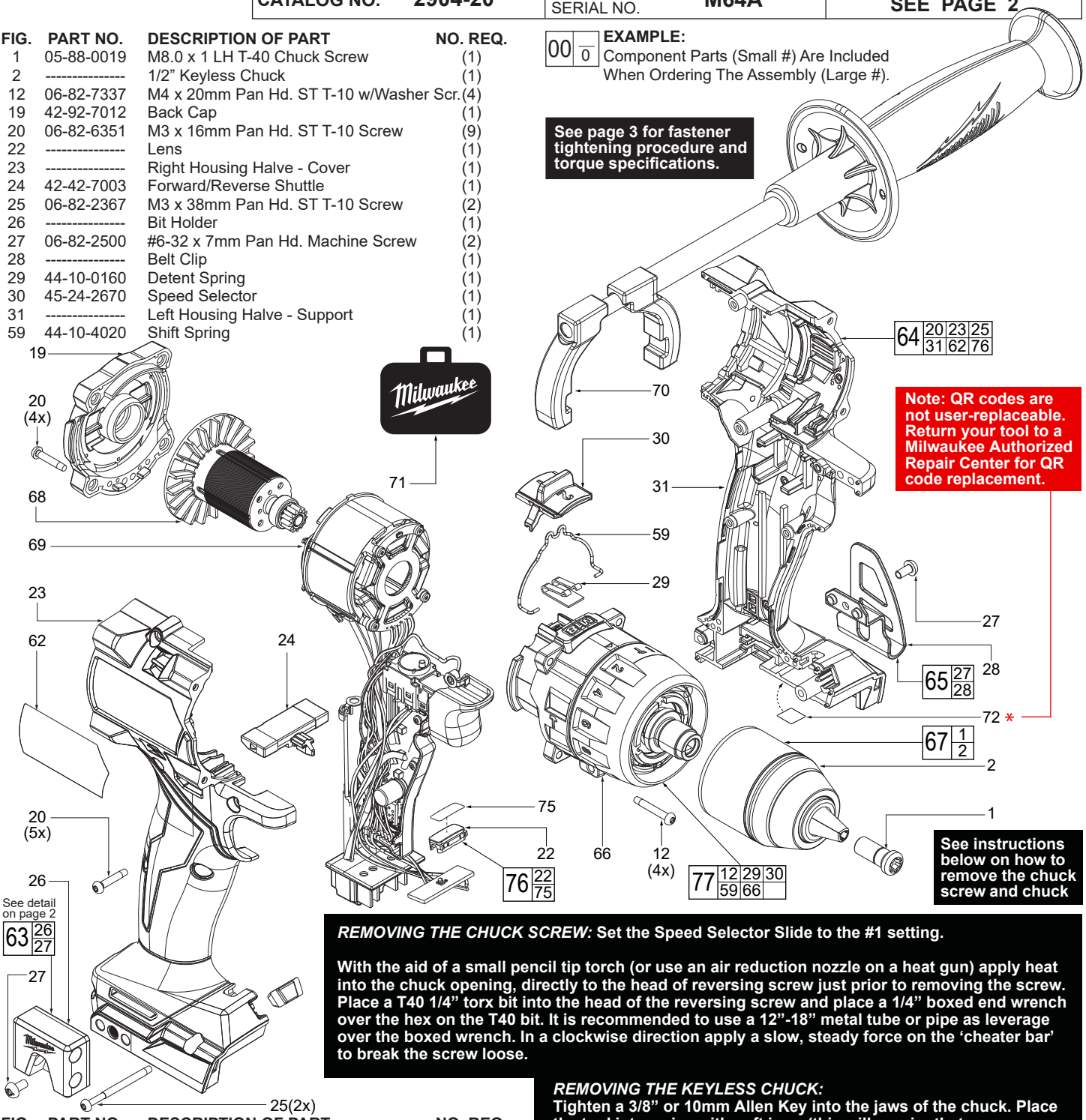

Note: QR codes are not user-replaceable. Return your tool to a Milwaukee Authorized Repair Center for QR code replacement.

See instructions below on how to remove the chuck screw and chuck

REMOVING THE CHUCK SCREW: **Set the Speed Selector Slide to the #1 setting.**

With the aid of a small pencil tip torch (or use an air reduction nozzle on a heat gun) apply heat into the chuck opening, directly to the head of reversing screw just prior to removing the screw. Place a T40 1/4" torx bit into the head of the reversing screw and place a 1/4" boxed end wrench over the hex on the T40 bit. It is recommended to use a 12"-18" metal tube or pipe as leverage over the boxed wrench. In a clockwise direction apply a slow, steady force on the 'cheater bar' to break the screw loose.

REMOVING THE KEYLESS CHUCK:
Tighten a 3/8" or 10mm Allen Key into the jaws of the chuck. Place the tool into a vise with soft jaws (this will require that you remove the belt clip from the tool). It is recommended to use a 12"-18" metal tube or pipe as leverage over the allen key. In a counter-clockwise direction apply a slow, steady force on the 'cheater bar' to break the chuck loose.

INSTALLING NEW CHUCK AND SCREW:
Torque Chuck to 1095 kg/cm (950.418 in/lbs or 79.20 ft/lbs)
Torque Screw to 400 kg/cm (347 in/lbs or 28.93 ft/lbs)

FIG.	PART NO.	DESCRIPTION OF PART	NO. REQ.
62	12-20-9095	Service Nameplate	(1)
63	49-16-3697	Bit Holder Kit (Accessory)	(1)
64	31-44-7060	Housing Service Assembly	(1)
65	42-70-0950	Belt Clip Service Kit	(1)
66	----------	Gearbox	(1)
67	42-66-2720	1/2" Keyless Chuck	(1)
68	16-07-2983	Rotor Service Assembly	(1)
69	14-20-6560	Electronic Service Assembly	(1)
70	42-62-0550	Side Handle Service Assembly	(1)
71	42-55-9020	Blow Molded Carrying Case	(1)
72	----------	QR Code Label	(1)
75	----------	Auto-Stop Label	(1)
76	31-44-7008	Lens/Label Assembly	(1)
77	14-29-5015	Gearbox Service Assembly	(1)

MILWAUKEE TOOL • www.milwaukeetool.com
13135 W. Lisbon Rd., Brookfield, WI 53005

Position ground ring terminal behind lug of gearcase. Route ground wire through wire trap channel as shown. The view is shown with forward/reverse shuttle removed.

1. Install LED light as shown.
2. Insert light board into housing cavity.
3. Place battery connector block into corresponding housing cavity.

LED Light

Light Board

Battery Connector Block

Bit Holder on M12™ Products

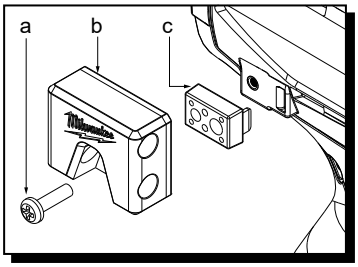

Bit Holder on M18™ Products

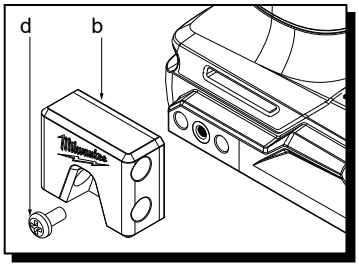

49-16-3697 BIT HOLDER (ACCESSORY)

FIG.	PART NO.	DESCRIPTION OF PART
a	06-82-3008	6-32 x 12.7mm Pan Hd. Phillips Screw (For M12™ Tools)
b	----------	Bit Holder
c	----------	Adapter (For M12™ Tools)
d	06-82-2500	6-32 x 7mm Pan Hd. Phillips Screw (For M18™ Tools)

FOR M18™ TOOLS, DISCARD KIT PARTS 'A' AND 'C'.

FIG.	SERVICE NOTES
62	A clean, dry surface is essential for proper performance for any adhesive system. The area intended for application of any adhesive label or nameplate must be prepared by cleaning with isopropyl alcohol. The solvent is to be applied with a clean, lint free applicator and the surface allowed to dry before applying the label or nameplate.

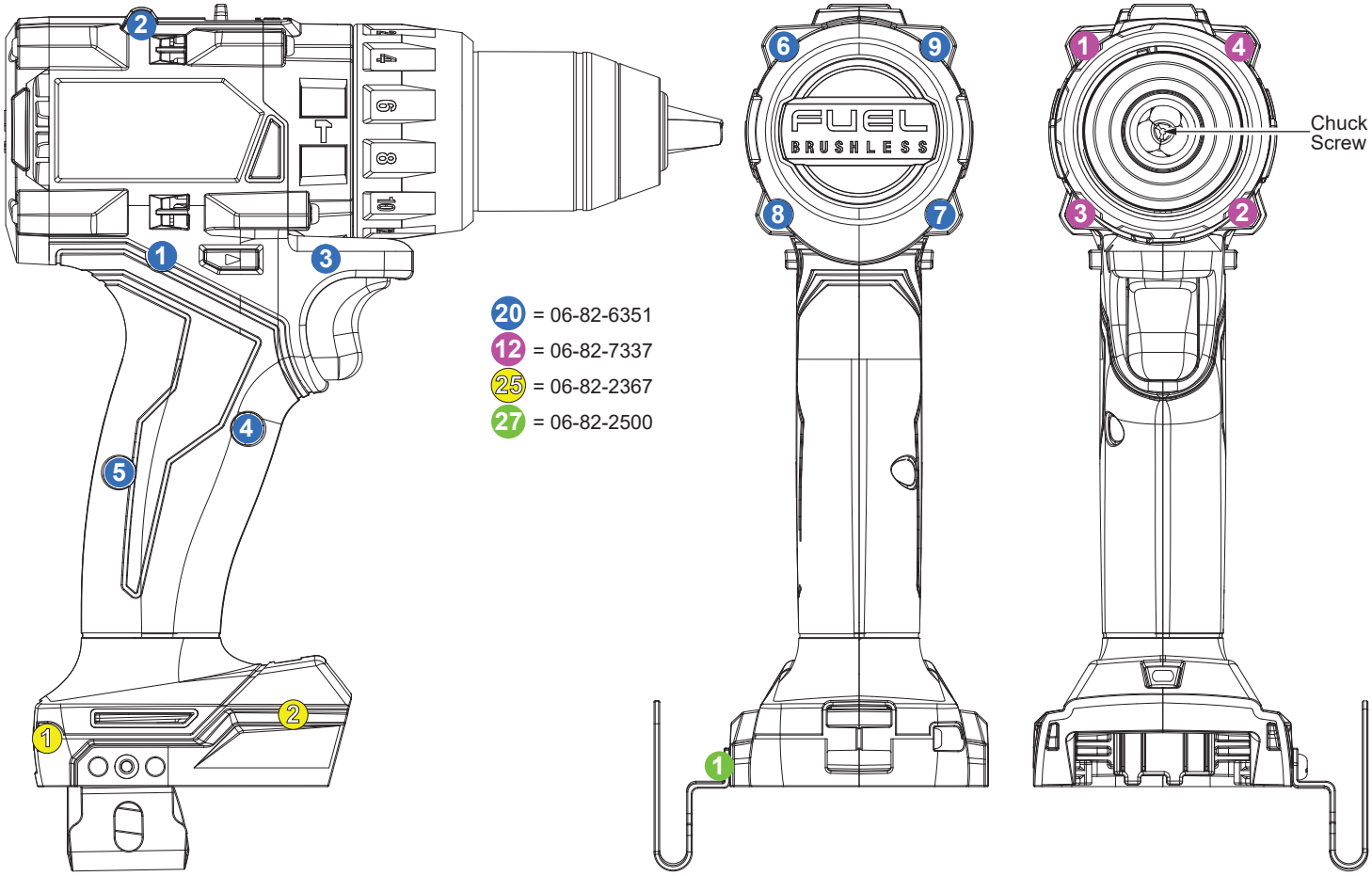

SCREW TORQUE SPECIFICATIONS

FIG.	PART NO.	DESCRIPTION OF FASTENER	WHERE USED	SEAT TORQUE (KGF/CM)	SEAT TORQUE (IN/LBS)
20	06-82-6351	M3 x 16mm Pan Hd. ST T-10 Screw	Right Housing Halve - Cover (Steps 1 thru 5)	9.0±1	7.8±1
20	06-82-6351	M3 x 16mm Pan Hd. ST T-10 Screw	Back Cap (Steps 6 thru 9)	9.0±1	7.8±1
12	06-82-7337	M4 x 20mm Pan Hd. ST T-10 w/Washer	Gearbox Service Assembly (Steps 1 thru 4)	10±1	8.6±1
25	06-82-2367	M3 x 38mm Pan Hd. ST T-10 Screw	Right Housing Halve - Cover (Steps 1 and 2)	10±1	8.6±1
27	06-82-2500	#6-32 x 7mm Pan Hd. Machine Screw	Belt Clip / Right Housing Halve	16±2	13.8±1
1	05-88-0019	M8.0 x 1 LH T-40 Chuck Screw	Chuck / Gearbox Spindle	400±29	347±25
2	----------	1/2” Keyless Chuck	Gearbox Spindle	1095±58	950±50