INSTALLATION INSTRUCTIONS

97G2UHV

Warm Air Gas Furnace Upflow/ Horizontal Left/Right Air Discharge Direct Vent & Non-Direct Vent

This manual must be left with the homeowner for future reference.

This is a safety alert symbol and should never be ignored. When you see this symbol on labels or in manuals, be alert to the potential for personal injury or death.

WARNING

Improper installation, adjustment, alteration, service or maintenance can cause property damage, personal injury or loss of life. Installation and service must be performed by a licensed professional installer (or equivalent), service agency or the gas supplier.

CAUTION

As with any mechanical equipment, personal injury can result from contact with sharp sheet metal edges. Be careful when you handle this equipment.

Table of Contents

Unit Dimensions 2
Parts Arrangement....3
Gas Furnace....4
Shipping and Packing List 4
Safety Information 4
General....6
Installation 10
Filters....13
Duct System 14
Venting Practices....15
Condensate Piping 34
Gas Piping....37
Electrical....40
Blower Performance....50
Unit Start-Up....54
Other Unit Adjustments....56
Service....57
Repair Parts List....59

Manufactured By
Allied Air Enterprises LLC
A Lennox International, Inc. Company
215 Metropolitan Drive
West Columbia, SC 29170

(P) 508404-01

Unit Dimensions

1 NOTE - C*20 and D*20 (5 Ton) size units installed in upflow applications that require air volumes of 1800 cfm (850 L/s) or greater must have one of the following:

1. Single side return air with transition, to accommodate 20 x 25 x 1 in. (508 x 635 x 25 mm) air filter.
2. Single side return air with optional RAB Return Air Base
3. Bottom return air.
4. Return air from both sides.
5. Bottom and one side return air.

2 Optional External Side Return Air Filter kit is not for use with optional Return Air Base.

* Consider sizing requirements for optional IAQ equipment before cutting side return opening.

TOP VIEW

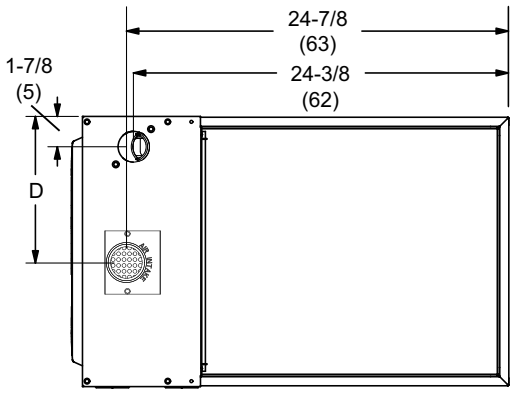

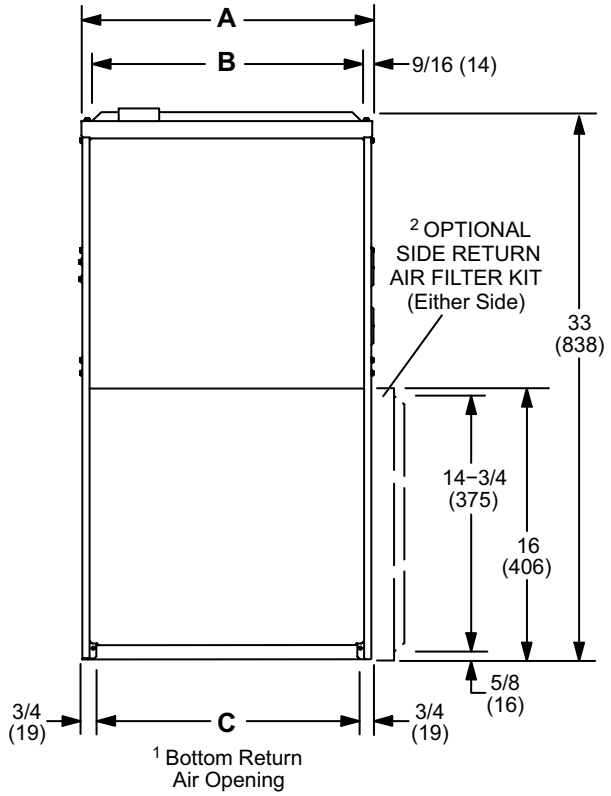

FRONT VIEW

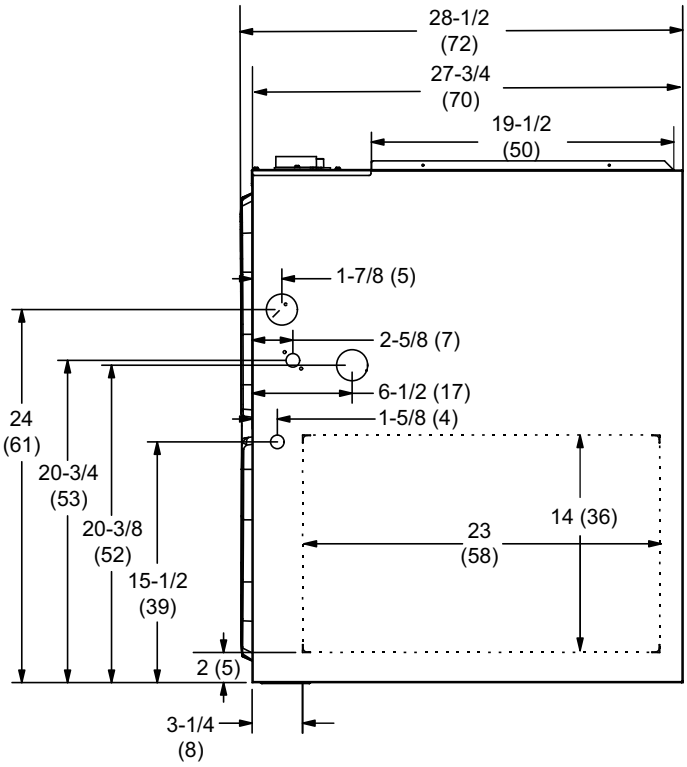

SIDE VIEW

Model	A		B		C		D	
	in.	mm	in.	mm	in.	mm	in.	mm
045-12 070-12	17-1/2	448	16-3/8	416	16	406	7-5/8	194
090-12 090-16 090-20 110-16 110-20	21	533	19-7/8	505	19-1/2	495	9-3/8	238
135-20	24-1/2	622	23-3/8	594	23	584	11-1/8	283

Parts Arrangement

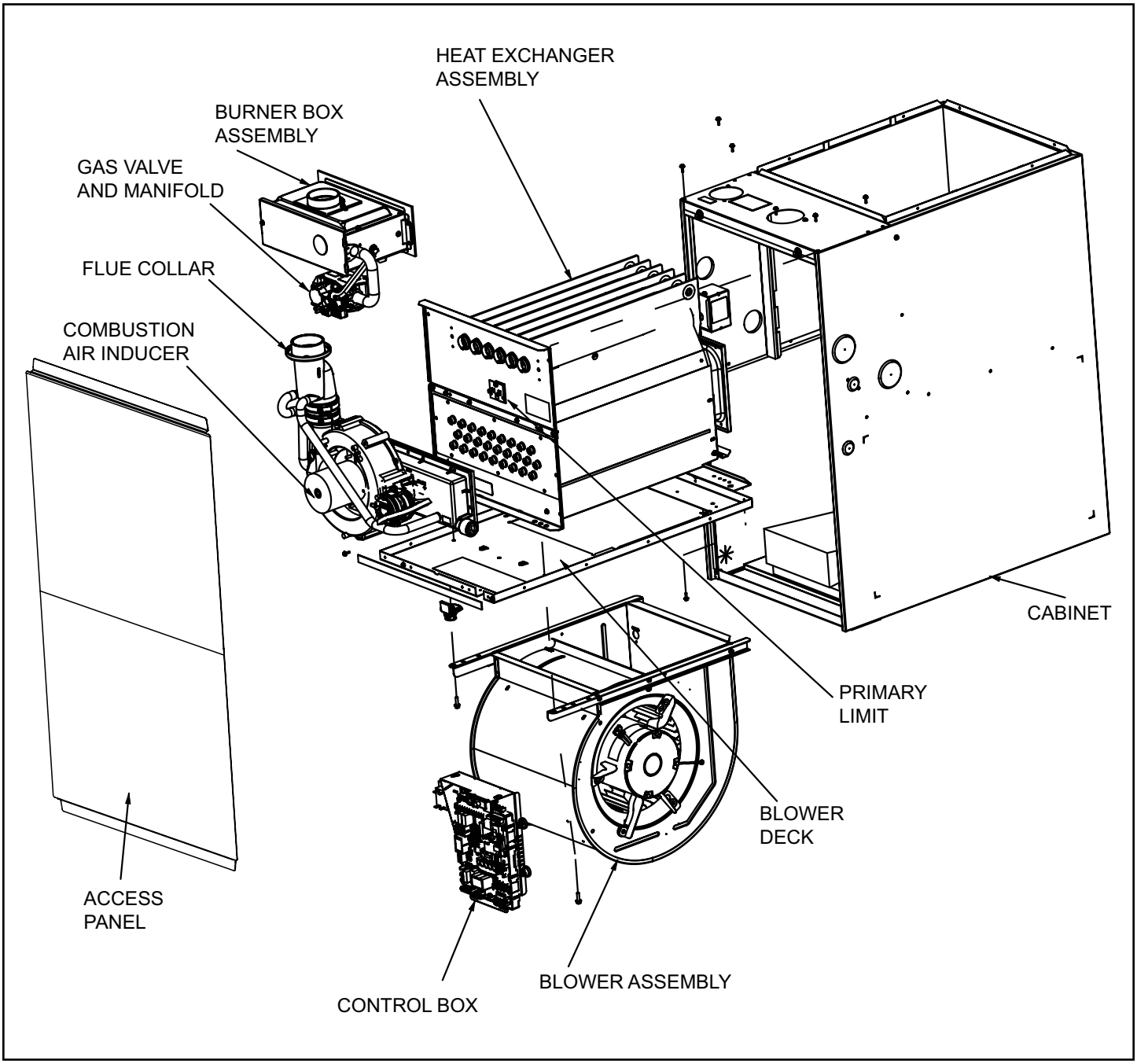

Figure 1.

Gas Furnace

The 97G2UHV Category IV gas furnace is shipped ready for installation in the upflow or horizontal position. The furnace is shipped with the bottom panel in place. The bottom panel must be removed if the unit is to be installed in horizontal or upflow applications with bottom return air.

The 97G2UHV can be installed as either a Direct Vent or a Non-Direct Vent Gas Central Furnace.

The furnace is equipped for installation in natural gas applications. A conversion kit (ordered separately) is required for use in propane/LP gas applications.

NOTE: *In Direct Vent installations, combustion air is taken from outdoors and flue gases are discharged outdoors. Non-Direct Vent installations, combustion air is taken from indoors or a ventilated attic or crawl space and flue gases are discharged outdoors. See Figure 2 and Figure 3 for applications involving roof termination.*

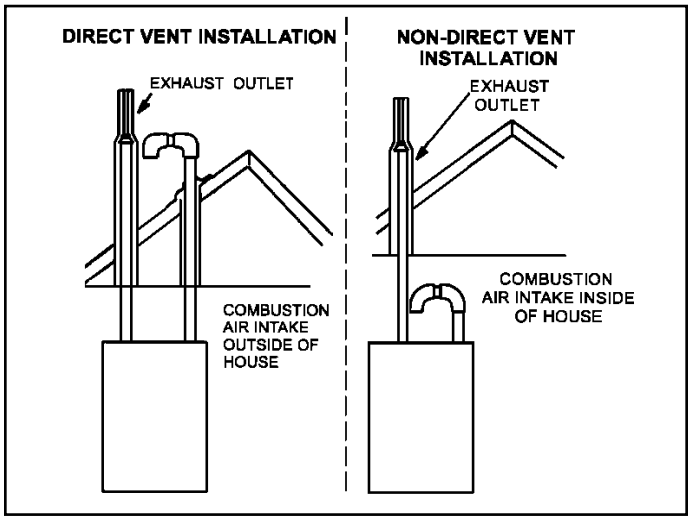

Figure 2.

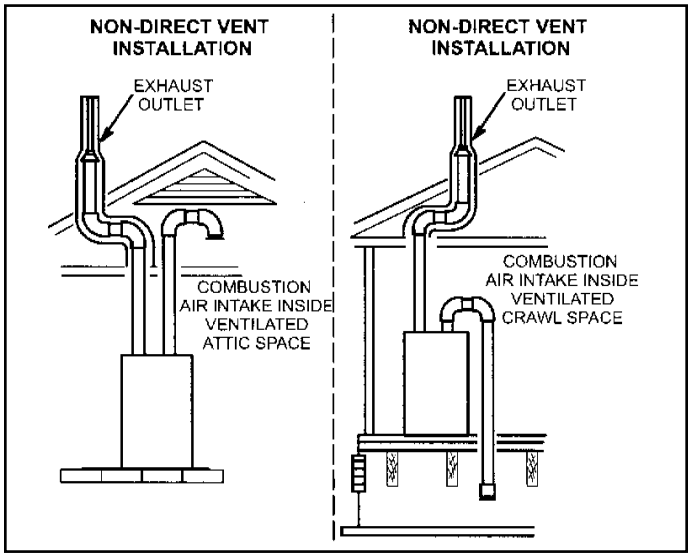

Figure 3.

Shipping and Packing List

1 - Assembled Gas Furnace

1 - Bag assembly containing the following:

- 1 - Snap bushing
- 1 - Snap Plug
- 1 - Wire tie
- 1 - Condensate trap
- 1 - Condensate trap cap
- 1 - Condensate trap clamp
- 1 - 2” Diameter debris screen
- 1 - 3/4” Threaded street elbow

Check equipment for shipping damage. If you find any damage, immediately contact the last carrier.

Please refer to specification sheets for available accessories.

Safety Information

⚠ WARNING

Improper installation, adjustment, alteration, service or maintenance can cause property damage, personal injury or loss of life. Installation and service must be performed by a licensed professional installer (or equivalent), service agency or the gas supplier.

⚠ CAUTION

As with any mechanical equipment, personal injury can result from contact with sharp sheet metal edges. Be careful when you handle this equipment.

⚠ DANGER

DANGER OF EXPLOSION!

There are circumstances in which odorant used with LP/Propane gas can lose its scent. In case of a leak, LP/Propane gas will settle close to the floor and may be difficult to smell. An LP/Propane leak detector should be installed in all LP applications.

Use only the type of gas approved for use with this furnace. Refer to unit nameplate.

97G2UHV units are CSA International certified to ANSI Z21.47 and CSA 2.3 standards.

Building Codes

In the USA, installation of gas furnaces must conform with local building codes. In the absence of local codes, units must be installed according to the current National Fuel Gas Code (ANSI Z223.1/NFPA 54). The National Fuel Gas Code is available from the American National Standards Institute, Inc., 11 West 42nd Street, New York, NY 10036.

In Canada, installation must conform with current National Standard of Canada CSA-B149 Natural Gas and Propane Installation Codes, local plumbing or waste water codes and other applicable local codes.

In order to ensure proper unit operation in non-direct vent applications, combustion and ventilation air supply must be provided according to the current National Fuel Gas Code or CSA-B149 standard.

Installed Locations

This furnace is CSA International certified for installation clearances to combustible material as listed on the unit nameplate and in the table in Figure 12 and Figure 18. Accessibility and service clearances must take precedence over fire protection clearances.

NOTE: *For installation on combustible floors, the furnace shall not be installed directly on carpeting, tile, or other combustible material other than wood flooring.*

For installation in a residential garage, the furnace must be installed so that the burner(s) and the ignition source are located no less than 18 inches (457 mm) above the floor. The furnace must be located or protected to avoid physical damage by vehicles. When a furnace is installed in a public garage, hangar, or other building that has a hazardous atmosphere, the furnace must be installed according to recommended good practice requirements and current National Fuel Gas Code or CSA B149 standards.

NOTE: *Furnace must be adjusted to obtain a temperature rise within the range specified on the unit nameplate. Failure to do so may cause erratic limit operation and premature heat exchanger failure.*

This furnace must be installed so that its electrical components are protected from water.

Installed in Combination with a Cooling Coil

When this furnace is used with cooling units (Figure 4), it shall be installed in parallel with, or on the upstream side of, cooling units to avoid condensation in the heating compartment. With a parallel flow arrangement, a damper (or other means to control the flow of air) must adequately prevent chilled air from entering the furnace. If the damper is manually operated, it must be equipped to prevent operation of either the heating or the cooling unit, unless it is in the full HEAT or COOL setting.

When installed, this furnace must be electrically grounded according to local codes. In addition, in the United States, installation must conform with the current National Electric Code, ANSI/NFPA No. 70. The National Electric Code (ANSI/NFPA No. 70) is available from the following address:

National Fire Protection Association
1 Battery March Park
Quincy, MA 02269

In Canada, all electrical wiring and grounding for the unit must be installed according to the current regulations of the Canadian Electrical Code Part I (CSA Standard C22.1) and/or local codes.

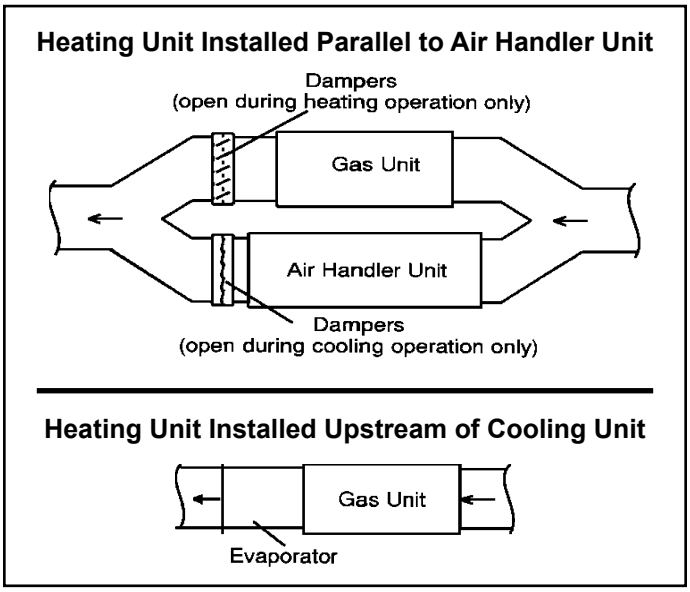

Figure 4.

NOTE: *This furnace is designed for a minimum continuous return air temperature of 60°F (16°C) or an intermittent operation down to 55°F (13°C) dry bulb for cases where a night setback thermostat is used. Return air temperature must not exceed 85°F (29°C) dry bulb.*

This furnace may be installed in alcoves, closets, attics, basements, garages, and utility rooms in the upflow or horizontal position.

This furnace design has not been CSA certified for installation in mobile homes, recreational vehicles, or outdoors.

Use of Furnace as a Construction Heater

Units may be used for heating of buildings or structures under construction, if the following conditions are met to ensure proper operation.

DO NOT USE THE UNIT FOR CONSTRUCTION HEAT UNLESS ALL OF THE FOLLOWING CRITERIA ARE MET:

a. Furnace must be in its final location. The vent system must be permanently installed per these installation instructions.

b. Furnace must be installed as a two pipe system and one hundred percent (100%) outdoor air must be provided for combustion air requirements during construction.

c. A room thermostat must control the furnace. The use of fixed jumpers that will provide continuous heating is prohibited.

d. The input rate and temperature rise must be set per the furnace rating plate.

e. Supply and Return air ducts must be provided and sealed to the furnace. Return air must be terminated outside of the space where furnace is installed.

f. Return air temperature range between 60°F (16°C) and 80°F (27°C) must be maintained.

g. MERV 11 or greater air filters must be installed in the system and must be regularly inspected and maintained (e.g., regular static checks and replaced at end of life) during construction.

h. Blower and vestibule access panels must be in place on the furnace at all times.

i. The furnace heat exchanger, components, duct system, and evaporator coils must be thoroughly cleaned following final construction clean−up.

j. Air filters must be replaced upon construction completion.

k. All furnace operating conditions (including ignition, input rate, temperature rise and venting) must be verified in accordance with these installation instructions.

EQUIPMENT MAY EXPERIENCE PREMATURE COMPONENT FAILURE AS A RESULT OF FAILURE TO FOLLOW THE ABOVE INSTALLATION INSTRUCTIONS. FAILURE TO FOLLOW THE ABOVE INSTALLATION INSTRUCTIONS VOIDS THE MANUFACTURER'S EQUIPMENT LIMITED WARRANTY. ALLIED AIR DISCLAIMS ALL LIABILITY IN CONNECTION WITH INSTALLER'S FAILURE TO FOLLOW THE ABOVE INSTALLATION INSTRUCTIONS.

NOTWITHSTANDING THE FOREGOING, INSTALLER IS RESPONSIBLE FOR CONFIRMING THAT THE USE OF CONSTRUCTION HEAT IS CONSISTENT WITH THE POLICIES AND CODES OF ALL REGULATING ENTITIES. ALL SUCH POLICIES AND CODES MUST BE ADHERED TO.

General

These instructions are intended as a general guide and do not supersede local codes in any way. Consult authorities having jurisdiction before installation.

In addition to the requirements outlined previously, the following general recommendations must be considered when installing one of these furnaces:

- Place the furnace as close to the center of the air distribution system as possible. The furnace should also be located close to the chimney or vent termination point.
- When the furnace is installed in an attic or other insulated space, keep insulation away from the furnace.
- When the furnace is installed in non-direct vent applications, do not block the furnace combustion air opening with clothing, boxes, doors, etc. Air is needed for proper combustion and safe unit operation.
- When the furnace is installed in an attic or other insulated space, keep insulation away from the furnace.
- When the furnace is installed in an unconditioned space, consider provisions required to prevent freezing of condensate drain system.

NOTE: *The Commonwealth of Massachusetts stipulates these additional requirements:*

- Gas furnaces shall be installed by a licensed plumber or fitter only.
- The gas cock must be "T handle" type.
- When a furnace is installed in an attic, the passageway to and service area surrounding the equipment shall be floored.

⚠ CAUTION

These units should not be installed in areas normally subject to freezing temperatures.

Combustion, Dilution & Ventilation Air

If this unit is installed as a Non-Direct Vent Furnace, follow the guidelines in this section.

NOTE: *In Non-Direct Vent Installations, combustion air is taken from indoors and flue gases are discharged outdoors.*

⚠ WARNING

Insufficient combustion air can cause headaches, nausea, dizziness or asphyxiation. It will also cause excess water in the heat exchanger resulting in rusting and premature heat exchanger failure. Excessive exposure to contaminated combustion air will result in safety and performance related problems. Avoid exposure to the following substances in the combustion air supply:

- Permanent wave solutions
- Chlorinated waxes and cleaners
- Chlorine base swimming pool chemicals
- Water softening chemicals
- De-icing salts or chemicals
- Carbon tetrachloride
- Halogen type refrigerants
- Cleaning solvents (such as perchloroethylene)
- Printing inks, paint removers, varnishes, etc.
- Hydrochloric acid
- Cements and glues
- Antistatic fabric softeners for clothes dryers
- Masonry acid washing materials

In the past, there was no problem in bringing in sufficient outdoor air for combustion. Infiltration provided all the air that was needed. In today's homes, tight construction practices make it necessary to bring in air from outside for combustion. Take into account that exhaust fans, appliance vents, chimneys, and fireplaces force additional air that could be used for combustion out of the house. Unless outside air is brought into the house for combustion, negative pressure (outside pressure is greater than inside pressure) will build to the point that a down draft can occur in the furnace vent pipe or chimney. As a result, combustion gases enter the living space creating a potentially dangerous situation.

In the absence of local codes concerning air for combustion and ventilation, use the guidelines and procedures in this section to install these furnaces to ensure efficient and safe operation. You must consider combustion air needs and requirements for exhaust vents and gas piping. A portion of this information has been reprinted with permission from the National Fuel Gas Code (ANSI-Z223.1/NFPA 54). This reprinted material is not the complete and official position of ANSI on the referenced subject, which is represented only by the standard in its entirely.

In Canada, refer to the CSA B149 Installation codes.

⚠ CAUTION

Do not install the furnace in a corrosive or contaminated atmosphere. Meet all combustion and ventilation air requirements, as well as all local codes.

All gas-fired appliances require air for the combustion process. If sufficient combustion air is not available, the furnace or other appliance will operate inefficiently and unsafely. Enough air must be provided to meet the needs of all fuel-burning appliances and appliances such as exhaust fans which force air out of the house. When fireplaces, exhaust fans, or clothes dryers are used at the same time as the furnace, much more air is required to ensure proper combustion and to prevent a down draft. Insufficient air causes incomplete combustion which can result in carbon monoxide.

In addition to providing combustion air, fresh outdoor air dilutes contaminants in the indoor air. These contaminants may include bleaches, adhesives, detergents, solvents and other contaminants which can corrode furnace components.

The requirements for providing air for combustion and ventilation depend largely on whether the furnace is installed in an unconfined or a confined space.

Unconfined Space

An unconfined space is an area such as a basement or large equipment room with a volume greater than 50 cubic feet (1.42 m³) per 1,000 Btu (.29 kW) per hour of the combined input rating of all appliances installed in that space. This space also includes adjacent rooms which are not separated by a door. Though an area may appear to be unconfined, it might be necessary to bring in outdoor air for combustion if the structure does not provide enough air by infiltration. If the furnace is located in a building of tight construction with weather stripping and caulking around the windows and doors, follow the procedures in the "Air from Outside" section.

Confined Space

A confined space is an area with a volume less than 50 cubic feet (1.42 m³) per 1,000 Btu (.29 kW) per hour of the combined input rating of all appliances installed in that space. This definition includes furnace closets or small equipment rooms.

When the furnace is installed so that supply ducts carry air circulated by the furnace to areas outside the space containing the furnace, the return air must be handled by ducts which are sealed to the furnace casing and which

terminate outside the space containing the furnace. This is especially important when the furnace is mounted on a platform in a confined space such as a closet or small equipment room. Even a small leak around the base of the unit at the platform or at the return air duct connection can cause a potentially dangerous negative pressure condition. Air for combustion and ventilation can be brought into the confined space either from inside the building or from outside.

Air from Inside

If the confined space that houses the furnace adjoins a space categorized as unconfined, air can be brought in by providing two permanent openings between the two spaces. Each opening must have a minimum free area of 1 square inch (645 mm²) per 1,000 Btu (.29 kW) per hour of total input rating of all gas-fired equipment in the confined space. Each opening must be at least 100 square inches (64516 mm²). One opening shall be within 12 inches (305 mm) of the top of the enclosure and one opening within 12 inches (305 mm) of the bottom. See Figure 5.

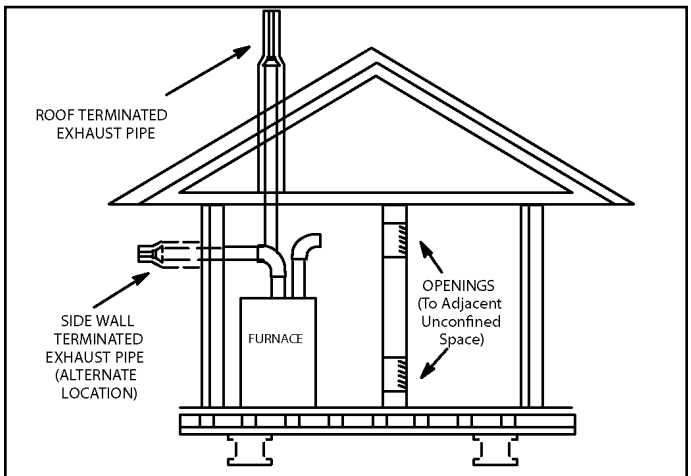

NOTE – Each opening shall have a free area of at least one square inch per 1,000 Btu (645 mm^2 per .29kW) per hour of the total input rating of all equipment in the enclosure, but not less than 100 square inches (64516 mm^2).

Figure 5. Equipment in Confined Space - All Air From Inside

Air from Outside

If air from outside is brought in for combustion and ventilation, the confined space shall be provided with two permanent openings. One opening shall be within 12” (305 mm) of the top of the enclosure and one within 12” (305 mm) of the bottom. These openings must communicate directly or by ducts with the outdoors or spaces (crawl or attic) that freely communicate with the outdoors or indirectly through vertical ducts. Each opening shall have a minimum free area of 1 square inch per 4,000 Btu (645 mm² per .59 kW) per hour of the total input rating of all equipment in the enclosure (see Figure 6 and Figure 7). It is also permissible to bring air for combustion from a ventilated attic (Figure 9) or ventilated crawl space (Figure 10).

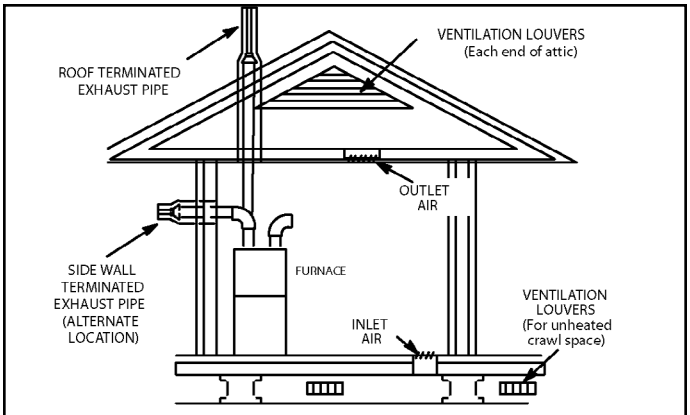

NOTE–The inlet and outlet air openings shall each have a free area of at least one square inch per 4,000 Btu (645 mm^2 per 1.17kW) per hour of the total input rating of all equipment in the enclosure.

Figure 6. Equipment in Confined Space - All Air from Outside (Inlet Air from Crawl Space and Outlet Air to Ventilated Attic)

When communicating with the outdoors through horizontal ducts, each opening shall have a minimum free area of 1 square inch (645 mm²) per 2,000 Btu (.56 kW) per hour of the total input rating of all equipment in the enclosure. See Figure 8.

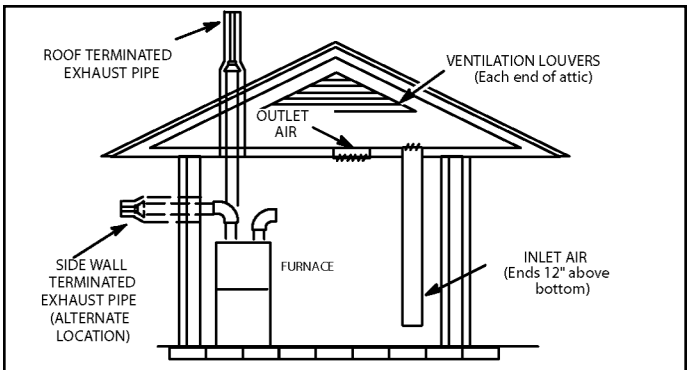

NOTE–The inlet and outlet air openings shall each have a free area of at least one square inch per 4,000 Btu (645mm^2 per 1.17kW) per hour of the total input rating of all equipment in the enclosure.

Figure 7. Equipment in Confined Space - All Air from Outside (All Air through Ventilated Attic)

⚠ WARNING

If this unit is being installed in an application with combustion air coming in from a space serviced by an exhaust fan, power exhaust fan, or other device which may create a negative pressure in the space, take care when sizing the inlet air opening. The inlet air opening must be sized to accommodate the maximum volume of exhaust air as well as the maximum volume of combustion air required for all gas appliances serviced by this space.

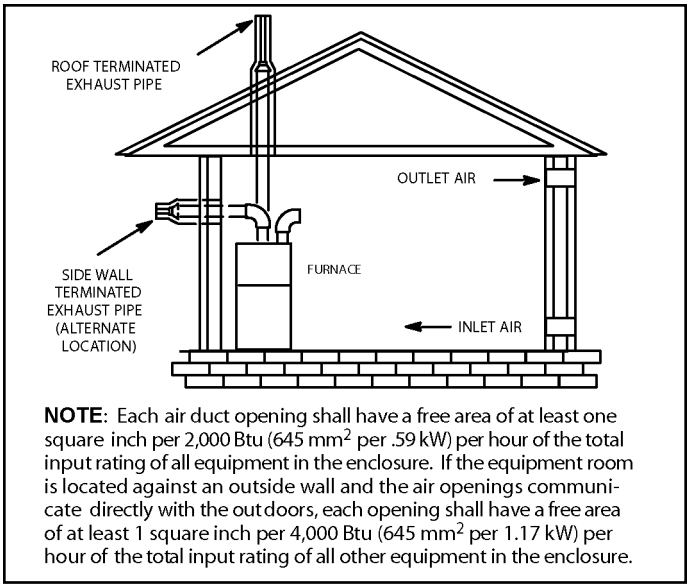

Figure 8. Equipment in Confined Space - All Air from Outside

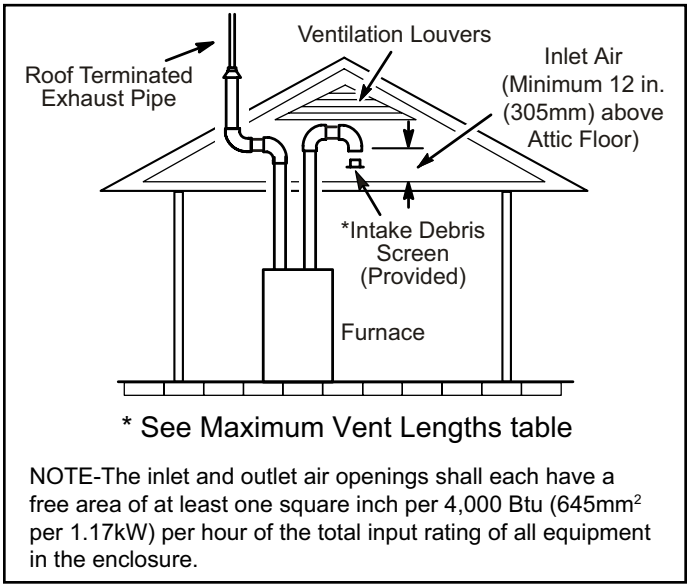

Figure 9. Equipment in Confined Space (Inlet Air from Ventilated Attic and Outlet Air to Outside)

When ducts are used, they shall be of the same cross-sectional area as the free area of the openings to which they connect. The minimum dimension of rectangular air ducts shall be no less than 3 inches (75 mm). In calculating free area, the blocking effect of louvers, grilles, or screens must be considered. If the design and free area of protective covering is not known for calculating the size opening required, it may be assumed that wood louvers will have 20 to 25 percent free area and metal louvers and grilles will have 60 to 75 percent free area. Louvers and grilles must be fixed in the open position or interlocked with the equipment so that they are opened automatically during equipment operation.

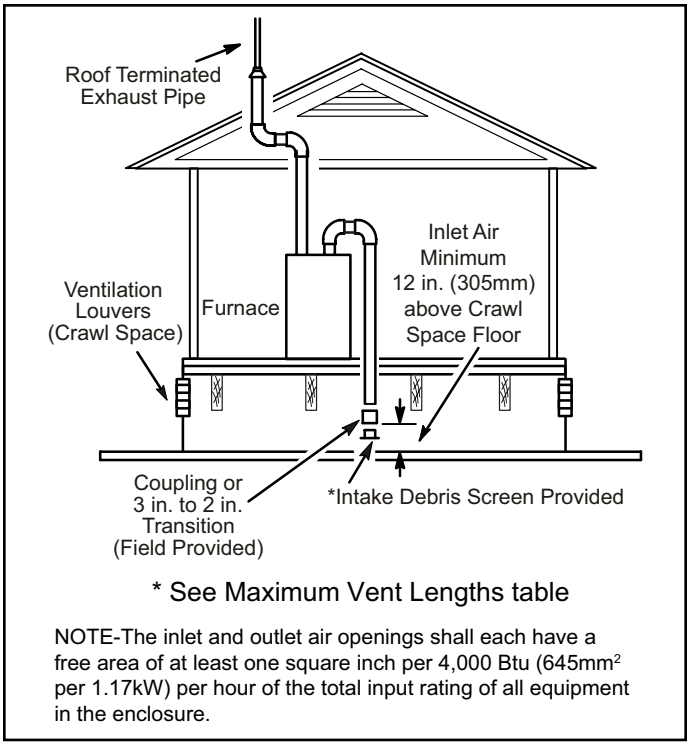

Figure 10. Equipment in Confined Space (Inlet Air from Ventilated Crawlspace and Outlet Air to Outside)

Shipping Bolt Removal

Units with 1/2 hp blower motor are equipped with three flexible legs and one rigid leg. The rigid leg is equipped with a shipping bolt and a flat white plastic washer (rather than the rubber mounting grommet used with a flexible mounting leg). See Figure 11. The bolt and washer must be removed before the furnace is placed into operation. After the bolt and washer have been removed, the rigid leg will not touch the blower housing.

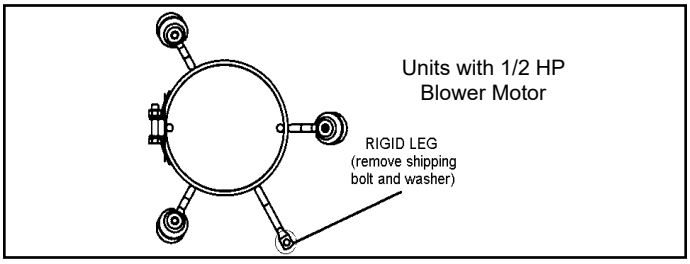

Figure 11.

Installation

Setting Equipment

⚠ WARNING

Do not connect the return air ducts to the back of the furnace. Doing so will adversely affect the operation of the safety control devices, which could result in personal injury or death.

⚠ WARNING

Blower access panel must be securely in place when blower and burners are operating. Gas fumes, which could contain carbon monoxide, can be drawn into living space resulting in personal injury or death.

Upflow Applications

The gas furnaces can be installed as shipped in the upflow position. Refer to Figure 12 for clearances. Select a location that allows for the required clearances that are listed on the unit nameplate. Also consider gas supply connections, electrical supply, vent connection, condensate trap and drain connections, and installation and service clearances [24 inches (610 mm) at unit front]. The unit must be level from side to side. Tilt the unit slightly (maximum 1/2 in. from level) from back to front to aid in the draining of the heat exchanger. See Figure 13.

Allow for clearances to combustible materials as indicated on the unit nameplate.

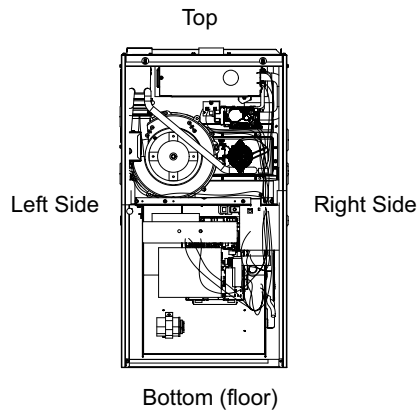

Top/Plenum	1 in. (25 mm)
*Front	0
Back	0
Sides	0†
Vent	0
Floor	0‡

* Front clearance in alcove installation must be 24 in. (610 mm). Maintain a minimum of 24 in. (610 mm) for front service access.

† Allow proper clearances to accommodate condensate trap and vent pipe installation.

‡ For installations on a combustible floor, do not install the furnace directly on carpeting, tile or other combustible materials other than wood flooring.

Figure 12. Installation Clearances

Unit must be level side-to-side in all applications.

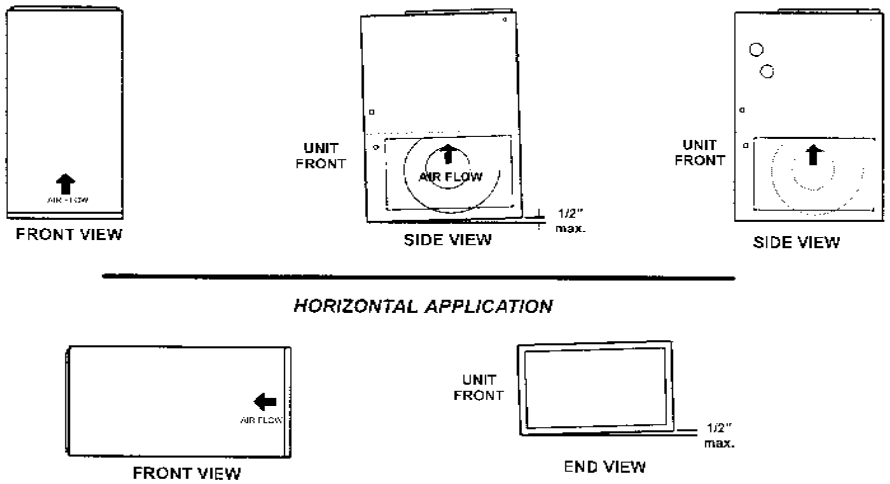

Tilt the unit slightly (Max. 1/2") from back to front to aid in the draining of the heat exchanger.

Figure 13. Setting Equipment

⚠ WARNING

Improper installation of the furnace can result in personal injury or death. Combustion and flue products must never be allowed to enter the return air system or air in the living space. Use sheet metal screws and joint tape to seal return air system to furnace.

In platform installations with furnace return, the furnace should be sealed airtight to the return air plenum. A door must never be used as a portion of the return air duct system. The base must provide a stable support and an airtight seal to the furnace. Allow absolutely no sagging, cracks, gaps, etc.

For no reason should return and supply air duct systems ever be connected to or from other heating devices such as a fireplace or stove, etc. Fire, explosion, carbon monoxide poisoning, personal injury and/or property damage could result.

Return Air Guidelines

Return air can be brought in through the bottom or either side of the furnace installed in an upflow application. If the furnace is installed on a platform with bottom return, make an airtight seal between the bottom of the furnace and the platform to ensure that the furnace operates properly and safely. The furnace is equipped with a removable bottom panel to facilitate installation.

Markings are provided on both sides of the furnace cabinet for installations that require side return air. Cut the furnace cabinet at the maximum dimensions shown on Page 2.

Furnace applications which include side return air and a condensate trap installed on the same side of the cabinet (trap can be installed remotely within 5 ft.) require either a return air base or field-fabricated transition to accommodate an optional IAQ accessory taller than 14.5”. See Figure 14.

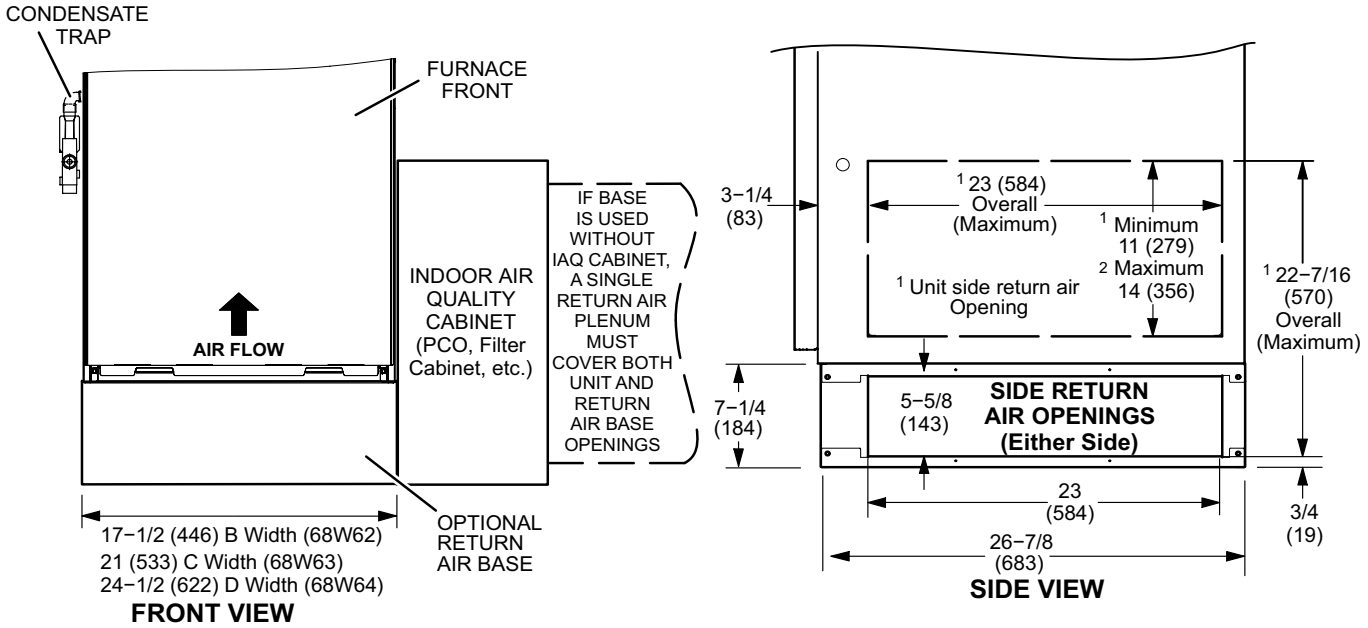

NOTE: Optional side return air filter kits are not for use with return air base.

1 Both the unit return air opening and the base return air opening must be covered by a single plenum or IAQ cabinet.

Minimum unit side return air opening dimensions for units requiring 1800 cfm or more of air (W x H): 23 x 11 in. (584 x 279 mm).

The opening can be cut as needed to accommodate plenum or IAQ cabinet while maintaining dimensions shown.

Side return air openings must be cut in the field. There are cutting guides stenciled on the cabinet for the side return air opening.

The size of the opening must not extend beyond the markings on the furnace cabinet.

2 To minimize pressure drop, the largest opening height possible (up to 14 inches) is preferred.

Figure 14. Optional Return Air Base (Upflow Applications Only)

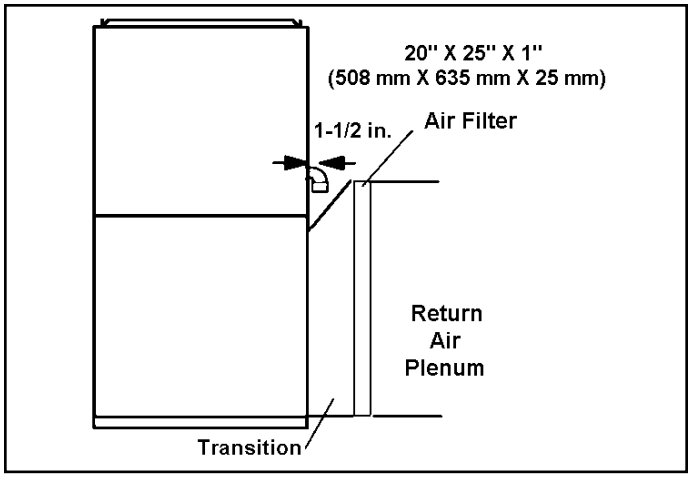

Figure 15. Side Return Air (with transition and filter)

Removing the Bottom Panel

Remove the two screws that secure the bottom cap to the furnace. Pivot the bottom cap down to release the bottom panel. Once the bottom panel has been removed, reinstall the bottom cap. See Figure 16.

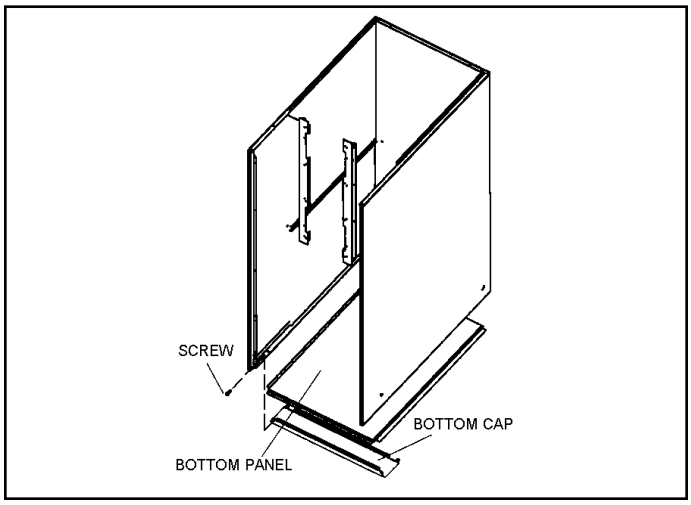

Figure 16. Removing the Bottom Panel

Horizontal Applications

⚠ WARNING

Do not install the furnace on its front or its back. See Figure 17.

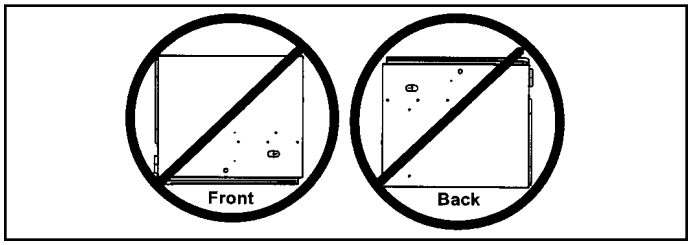

Figure 17.

This furnace can be installed in horizontal applications with either right or left hand air discharge.

Refer to Figure 18 for clearances in horizontal applications.

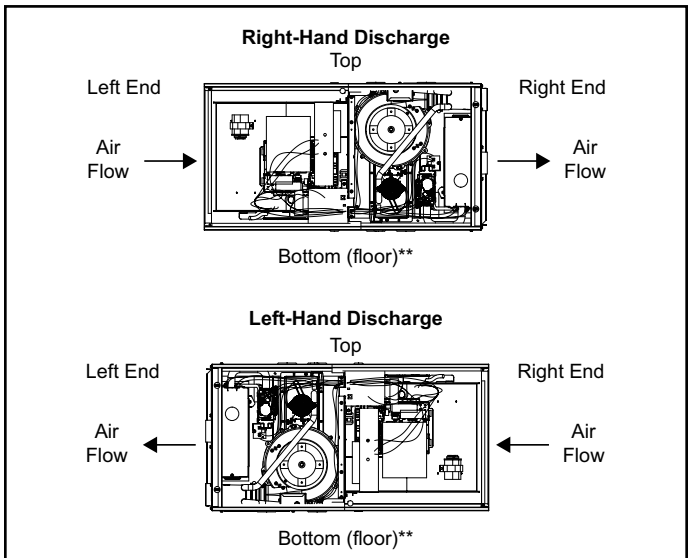

Top	0
*Front	0
Back	0
Ends	0
Vent	0
Floor	0‡

* Front clearance in alcove installation must be 24 in. (610 mm). Maintain a minimum of 24 in. (610 mm) for front service access.

** An 8” service clearance must be maintained below the unit to provide for servicing of the condensate trap unless the trap is mounted remotely.

‡ For installations on a combustible floor, do not install the furnace directly on carpeting, tile or other combustible materials other than wood flooring.

Figure 18. Horizontal Application Installation Clearances

Suspended Installation of Horizontal Unit

This furnace may be installed in either an attic or a crawl space. Either suspend the furnace from roof rafters or floor joists, as shown in Figure 19, or install the furnace on a platform, as shown in Figure 20. A horizontal suspension kit (51W10) may be ordered from your distributor or use equivalent.

NOTE: *Heavy-gauge sheet metal straps may be used to suspend the unit from roof rafters or ceiling joists. When straps are used to suspend the unit in this way, support must be provided for both the ends. The straps must not interfere with the plenum or exhaust piping installation.*

Cooling coils and supply and return air plenums must be supported separately.

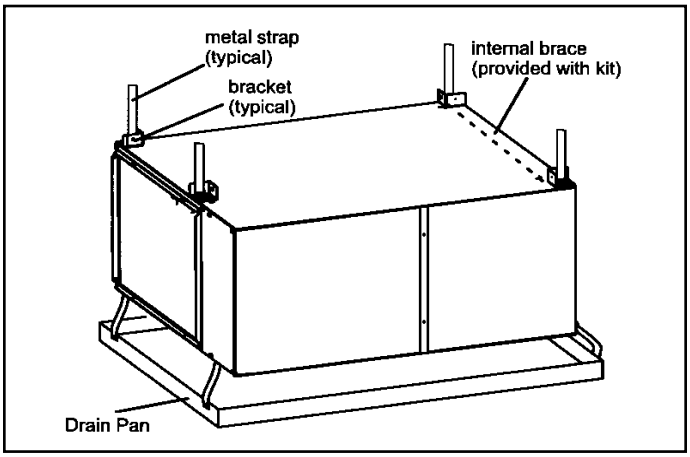

Figure 19. Typical Horizontal Application

NOTE: *When the furnace is installed on a platform or with the horizontal suspension kit in a crawl space, it must be elevated enough to avoid water damage, accommodate drain trap and to allow the evaporator coil to drain.*

Platform Installation of Horizontal Unit

1. Select location for unit, keeping in mind service and other necessary clearances. See Figure 18.
2. Construct a raised wooden frame and cover frame with a plywood sheet. If unit is installed above finished space, fabricate an auxiliary drain pan to be installed under unit. Set unit in drain pan as shown in Figure 20. Leave 8 inches for service clearance below unit for condensate trap.
3. Provide a service platform in front of unit. When installing the unit in a crawl space, a proper support platform may be created using cement blocks.
4. Route auxiliary drain line so that water draining from this outlet will be easily noticed by the homeowner.
5. If necessary, run the condensate line into a condensate pump to meet drain line slope requirements. The pump must be rated for use with condensing furnaces. Protect the condensate discharge line from the pump to the outside to avoid freezing.
6. Continue with exhaust, condensate and intake piping installation according to instructions.

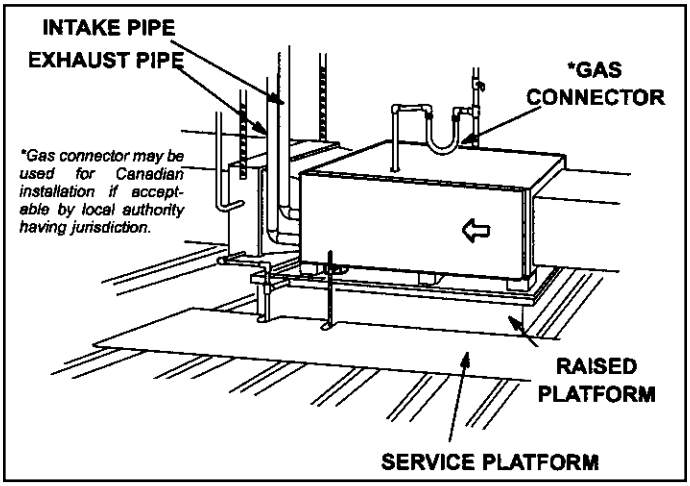

Figure 20.

Return Air - Horizontal Applications

Return air may be brought in only through the end of a furnace installed in the horizontal position. The furnace is equipped with a removable bottom panel to facilitate installation. See Figure 16.

Filters

This unit is not equipped with a filter or rack. A field provided filter is required for the unit to operate properly. Table 1 lists recommended filter sizes.

A filter must be in place whenever the unit is operating.

Furnace Cabinet Width	Filter Size	
	Side Return	Bottom Return
17-1/2”	16 x 25 x 1	16 x 25 x 1
21”		20 x 25 x 1
24-1/2”		24 x 25 x 1

Table 1.

Duct System

Use industry approved standards to size and install the supply and return air duct system. This will result in a quiet and low-static system that has uniform air distribution.

NOTE: *This furnace is not certified for operation in heating mode (indoor blower operating at selected heating speed) with an external static pressure which exceeds 0.8 inches w.c. Operation at these conditions may result in improper limit operation.*

Supply Air Plenum

If the furnace is installed without a cooling coil, a removable access panel should be installed in the supply air duct. The access panel should be large enough to permit inspection (by reflected light) of the heat exchanger for leaks after the furnace is installed. The furnace access panel must always be in place when the furnace is operating and it must not allow leaks into the supply air duct system.

Return Air Plenum

NOTE: *Return air must not be drawn from a room where this furnace, or any other gas fueled appliance (i.e., water heater), or carbon monoxide producing device (i.e., wood fireplace) is installed.*

When return air is drawn from a room, a negative pressure is created in the room. If a gas appliance is operating in a room with negative pressure, the flue products can be pulled back down the vent pipe and into the room. This reverse flow of the flue gas may result in incomplete combustion and the formation of carbon monoxide gas. This raw gas or toxic fumes might then be distributed throughout the house by the furnace duct system.

Return air can be brought in through the bottom or either side of the furnace. If a furnace with bottom return air is installed on a platform, make an airtight seal between the bottom of the furnace and the platform to ensure that the unit operates properly and safely. Use fiberglass sealing strips, caulking, or equivalent sealing method between the plenum and the furnace cabinet to ensure a tight seal. If a filter is installed, size the return air duct to fit the filter frame.

Pipe & Fittings Specifications

All pipe, fittings, primer and solvent cement must conform with American National Standard Institute and the American Society for Testing and Materials (ANSI/ASTM) standards. The solvent shall be free flowing and contain no lumps, undissolved particles or any foreign matter that adversely affects the joint strength or chemical resistance of the cement. The cement shall show no gelation, stratification, or separation that cannot be removed by stirring. Refer to Table 2 for approved piping and fitting materials.

⚠ CAUTION

Solvent cements for plastic pipe are flammable liquids and should be kept away from all sources of ignition. Do not use excessive amounts of solvent cement when making joints. Good ventilation should be maintained to reduce fire hazard and to minimize breathing of solvent vapors. Avoid contact of cement with skin and eyes.

Piping and Fittings Specifications	
Schedule 40 PVC (Pipe)	D1785
Schedule 40 PVC (Fittings)	D2466
Schedule 40 CPVC (Pipe)	F441
Schedule 40 CPVC (Fittings)	F438
SDR-21 PVC or SDR-26 PVC (Pipe)	D2241
SDR-21 CPVC or SDR-26 CPVC (Pipe)	F442
Schedule 40 ABS (Pipe)	D1527
Schedule 40 ABS (Fittings)	D2468
ABS-DWV (Drain Waste & Vent) (Pipe & Fittings)	D2661
PVC-DWV (Drain Waste & Vent) Pipe & Fittings)	D2665
PRIMER & SOLVENT CEMENT	**ASTM SPECIFICATION**
PVC & CPVC Primer	F656
PVC Solvent Cement	D2564
CPVC Solvent Cement	F493
ABS Solvent Cement	D2235
PVC/CPVC/ABS All Purpose Cement For Fittings & Pipe of the same material	D2564, D2235, F493
ABS to PVC or CPVC Transition Solvent Cement	D3138
CANADA PIPE & FITTING & SOLVENT CEMENT	**MARKING**
PVC & CPVC Pipe and Fittings	ULCS636
PVC & CPVC Solvent Cement	
ABS to PVC or CPVC Transition Cement	
POLYPROPYLENE VENTING SYSTEM	ULC-S636
PolyPro® by Duravent	
InnoFlue® by Centrotherm	ULC-S636
ECCO Polypropylene Vent™	ULC-S636

Table 2.

⚠ IMPORTANT

97G2UHV exhaust and intake connections are made of PVC. Use PVC primer and solvent cement when using PVC vent pipe. When using ABS vent pipe, use transitional solvent cement to make connections to the PVC fitting in the unit.

Use PVC primer and solvent cement or ABS solvent cement meeting ASTM specifications, refer to Table 2. As an alternate, use all purpose cement, to bond ABS, PVC, or CPVC pipe when using fittings and pipe made of the same materials. Use transition solvent cement when bonding ABS to either PVC or CPVC.

Low temperature solvent cement is recommended during cooler weather. Metal or plastic strapping may be used for vent pipe hangers. Uniformly apply a liberal coat of PVC primer for PVC or use a clean dry cloth for ABS to clean inside socket surface of fitting and male end of pipe to depth of fitting socket.

Canadian Applications Only

Pipe, fittings, primer and solvent cement used to vent (exhaust) this appliance must be certified to ULC S636 and supplied by a single manufacturer as part of an approved vent (exhaust) system. When bonding the vent system to the furnace, use ULC S636 approved One-Step Transition Cement to bond the pipe to the flue collar, or to bond the 90° elbow or reducing 90° elbow to the flue collar. In addition, the first three feet of vent pipe from the furnace flue collar must be accessible for inspection.

Joint Cementing Procedure

All cementing of joints should be done according to the specifications outlined in ASTM D 2855.

⚠ DANGER

DANGER OF EXPLOSION!

Fumes from PVC glue may ignite during system check. Allow fumes to dissipate for at least 5 minutes before placing unit into operation.

1. Measure and cut vent pipe to desired length.
2. Debur and chamfer end of pipe, removing any ridges or rough edges. If end is not chamfered, edge of pipe may remove cement from fitting socket and result in a leaking joint.
3. Clean and dry surfaces to be joined.
4. Test fit joint and mark depth of fitting on outside of pipe.
5. Uniformly apply a liberal coat of PVC primer for PVC or use a clean dry cloth for ABS to clean inside socket surface of fitting and male end of pipe to depth of fitting socket.

   NOTE: *Time is critical at this stage. Do not allow primer to dry before applying cement.*
6. Promptly apply solvent cement to end of pipe and inside socket surface of fitting. Cement should be applied lightly but uniformly to inside of socket. Take care to keep excess cement out of socket. Apply second coat to end of pipe.
7. Immediately after applying last coat of cement to pipe, and while both inside socket surface and end of pipe are wet with cement, forcefully insert end of pipe into socket until it bottoms out. Turn PVC pipe 1/4 turn during assembly (but not after pipe is fully inserted) to distribute cement evenly. Do not turn ABS or cellular core pipe.

   NOTE: *Assembly should be completed within 20 seconds after last application of cement. Hammer blows should not be used when inserting pipe.*
8. After assembly, wipe excess cement from pipe at end of fitting socket. A properly made joint will show a bead around its entire perimeter. Any gaps may indicate an improper defective assembly due to insufficient solvent.
9. Handle joints carefully until completely set.

Venting Practices

Piping Suspension Guidelines

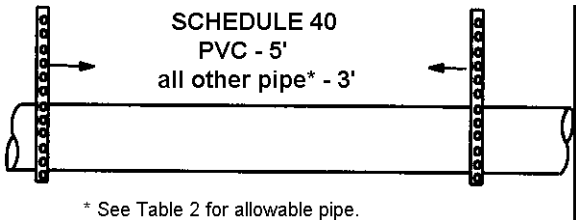

NOTE: *Isolate piping at the point where it exits the outside wall or roof in order to prevent transmission of vibration to the structure.*

Wall Thickness Guidelines

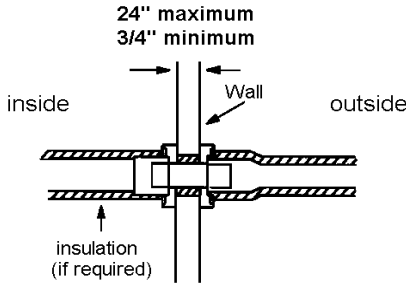

Figure 21.

Exhaust Piping

1. In areas where piping penetrates joist or interior walls, hole must be large enough to allow clearance on all sides of pipe through center of hole using a hanger.
2. When furnace is installed in a residence where unit is shut down for an extended period of time, such as a vacation home, make provisions for draining condensate collection from trap and lines.

Removal of the Furnace from Common Vent

In the event that an existing furnace is removed from a venting system commonly run with separate gas appliances, the venting system is likely to be too large to properly vent the remaining attached appliances.

Conduct the following test while each appliance is operating and the other appliances (which are not operating) remain connected to the common venting system. If the venting system has been installed improperly, you must correct the system as indicated in the general venting requirements section.

⚠ WARNING

CARBON MONOXIDE POISONING HAZARD

Failure to follow the steps outlined below for each appliance connected to the venting system being placed into operation could result in carbon monoxide poisoning or death.

The following steps shall be followed for each appliance connected to the venting system being placed into operation, while all other appliances connected to the venting system are not in operation:

Capacity	VENT PIPE DIA. (in.)	STANDARD			CONCENTRIC		
		Outdoor Exhaust Accelerator (Dia. X Length)	Outdoor Exhaust Accelerator (Dia. X Length)	Flush Mount Kit	1-1/2” Concentric Kit	2” Concentric Kit	3” Concentric Kit
		1-1/2” X 12”	2” X 12”	51W11 *	71M80 or +44W92++	69M29 or +44W92++	60L46 or 44W93+
045	[1] 1-1/2			YES	YES		
	2	YES		YES	YES		
	2-1/2	YES		YES	YES		
	3	YES		YES	YES		
070	[1] 1-1/2			YES	YES		
	2	YES		YES	YES		
	2-1/2	YES		YES	YES		
	3	YES		YES	YES		
090	2		YES	YES		YES	YES
	2-1/2		YES	YES		YES	YES
	3		YES	YES		YES	YES
110	2		YES	YES		YES	YES
	2-1/2		YES	YES		YES	YES
	3		YES	YES		YES	YES
135	3		YES	YES			YES

[1] 2 inch to 1-1/2 inch reducer required, must be field provided.

* Requires field-provided and installed 1-1/2” exhaust accelerator.

** Kit 51W11 is provided with a 1-1/2” accelerator, which must be used for all 45,000 and 70,000 furnace installations. When using 1-/2 in. piping, the pipe must be transitioned to 2 in. pipe when used with the Flush Mount Kit.

† Termination kits 44W92, 44W93, 30G28 and 81J20 approved for use in Canadian installations to meet CSAB149.

†† The 44W92 concentric kit is provided with a 1-1/2” accelerator, which must be installed on the exhaust outlet when this kit is used with the 45,000 and 70,000 furnaces. When using 1-1/2 in. piping, the pipe must be transitioned to 2 in. pipe when used with the Concentric Kit.

Table 3. Outdoor Termination Kits

1. Seal any unused openings in the common venting system.
2. Inspect the venting system for proper size and horizontal pitch. Determine that there is no blockage, restriction, leakage, corrosion, or other deficiencies which could cause an unsafe condition.
3. Close all building doors and windows and all doors between the space in which the appliances remaining connected to the common venting system are located and other spaces of the building. Turn on clothes dryers and any appliances not connected to the common venting system. Turn on any exhaust fans, such as range hoods and bathroom exhausts, so they will operate at maximum speed. Do not operate a summer exhaust fan. Close fireplace dampers.
4. Follow the lighting instructions. Turn on the appliance that is being inspected. Adjust the thermostat so that the appliance operates continuously.
5. After the main burner has operated for 5 minutes, test for leaks of flue gases at the draft hood relief opening. Use the flame of a match or candle.
6. After determining that each appliance connected to the common venting system is venting properly, (step 3) return all doors, widows, exhaust fans, fireplace dampers, and any other gas burning appliances to their previous mode of operation.
7. If a venting problem is found during any of the preceding tests, the common venting system must be modified to correct the problem.
8. Resize the common venting system to the minimum vent pipe size determined by using the appropriate tables in Appendix G. (These are in the current standards of the National Fuel Gas Code ANSI Z223.1.)

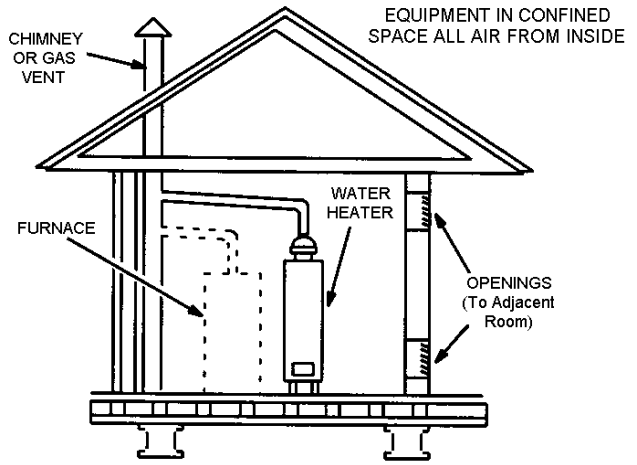

If this gas furnace replaces a furnace which was commonly vented with another gas appliance, the size of the existing vent pipe for that gas appliance must be checked. Without the heat of the original furnace flue products, the existing vent pipe is probably oversized for the single water heater or other appliance. The vent should be checked for proper draw with the remaining appliance.

Figure 22.

Exhaust Piping

Route piping to outside of structure. Continue with installation following instructions given in piping termination section.

⚠ CAUTION

Do Not discharge exhaust into an existing stack or stack that also serves another gas appliance. If vertical discharge through an existing unused stack is required, insert PVC pipe inside the stack until the end is even with the top or outlet end of the metal stack.

⚠ CAUTION

The exhaust vent pipe operates under positive pressure and must be completely sealed to prevent leakage of combustion products into the living space.

Vent Piping Guidelines

This gas furnace can be installed as either Non-Direct Vent or a Direct Vent gas central furnace.

NOTE: *In Non-Direct Vent installations, combustion air is taken from indoors and flue gases are discharged outdoors.*

Intake and exhaust pipe sizing - Size pipe according to Table 4 and Table 5A through Table 5C. Table 4 lists the minimum vent pipe lengths permitted. Table 5A through Table 5C lists the maximum pipe lengths permitted.

Regardless of the diameter of pipe used, the standard roof and wall terminations described in section Exhaust Piping Terminations should be used. Exhaust vent termination pipe is sized to optimize the velocity of the exhaust gas as it exits the termination. Refer to Table 7.

In some applications which permit the use of several different sizes of vent pipe, a combination vent pipe may be used. Contact Allied Air Technical Service for assistance in sizing vent pipe in these applications.

NOTE: *The exhaust collar on all models is sized to accommodate 2" Schedule 40 vent pipe. When vent pipe which is larger than 2" must be used in an upflow application, a transition must be applied at the exhaust collar in order to properly step to the larger diameter vent pipe. Contact Allied Air Technical Service for more information concerning sizing of vent systems which include multiple pipe sizes.*

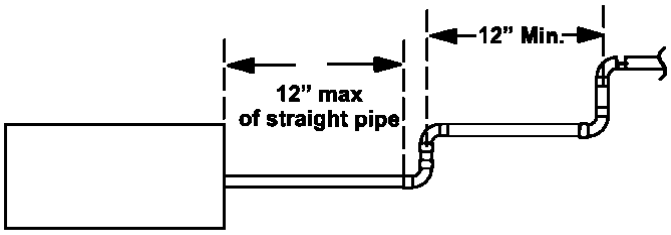

NOTE: *All horizontal runs of exhaust pipe must slope back toward unit. A minimum of 1/4" (6 mm) drop for each 12" (305 mm) of horizontal run is mandatory for drainage.*

NOTE: *Exhaust pipe MUST be glued to furnace exhaust fittings.*

NOTE: *Exhaust piping should be checked carefully to make sure there are no sages or low spots.*

Figure 23. Exhaust Pipe Horizontal Application

⚠ IMPORTANT

Do not use screens or perforated metal in exhaust or intake terminations. Doing so will cause freeze-ups and may block the terminations.

Capacity	Min. Vent Length*
045, 070, 090, 110, 135	15 ft. or 5 ft. plus 2 elbows or 10 ft. plus 1 elbow
*Any approved termination may be added to the minimum length listed.	

Table 4. Minimum Vent Pipe Lengths

Use the following steps to correctly size vent pipe diameter.

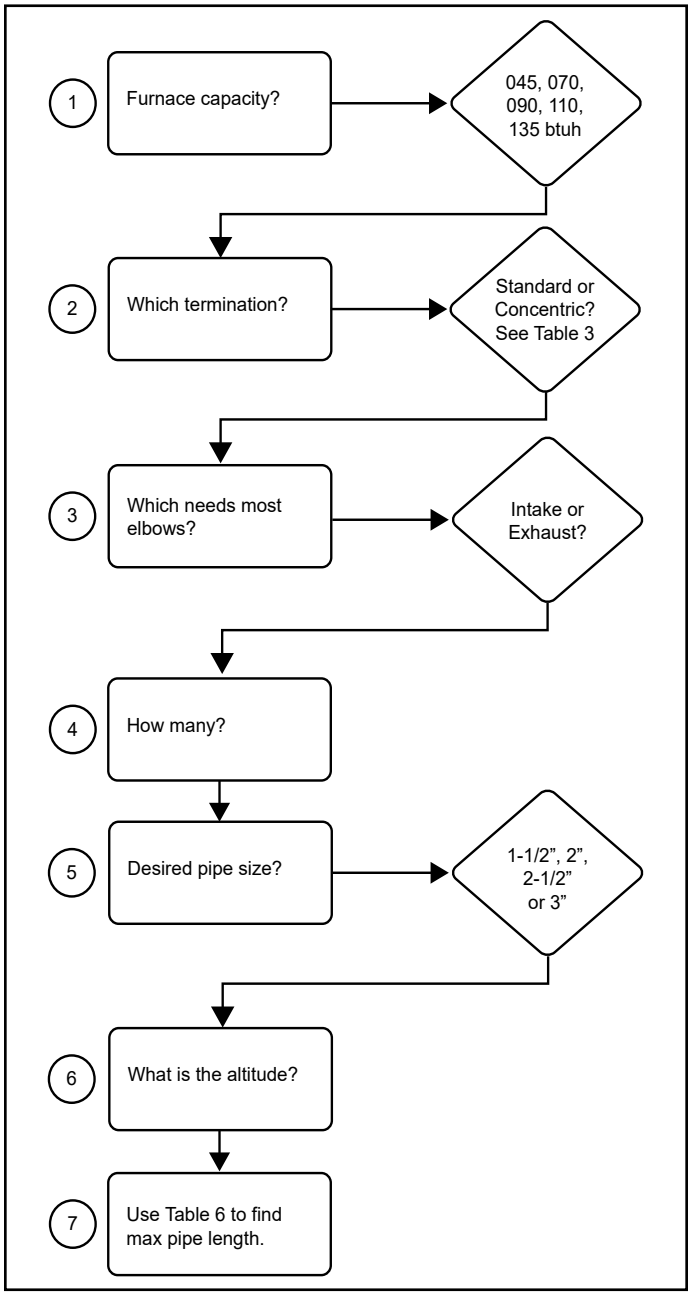

Figure 24.

Maximum Allowable Intake or Exhaust Vent Length in Feet																				
Standard Termination at Elevation 0 - 4,500 ft																				
Number of 90° Elbows Used	1-1/2" Pipe					2" Pipe					2-1/2" Pipe					3" Pipe				
	Capacity					**Capacity**					**Capacity**					**Capacity**				
	45	**70**	**90**	**110**	**135**	**45**	**70**	**90**	**110**	**135**	**45**	**70**	**90**	**110**	**135**	**45**	**70**	**90**	**110**	**135**
1	25	20	n/a	n/a	n/a	76	61	39	19	n/a	110	110	88	53	n/a	133	132	113	113	109
2	20	15				71	56	34	14		105	105	83	48		128	127	108	108	104
3	15	10				66	51	29	9		100	100	78	43		123	122	103	103	99
4	10	n/a				61	46	24	n/a		95	95	73	38		118	117	98	98	94
5	n/a					56	41	19			90	90	68	33		113	112	93	93	89
6						51	36	14			85	85	63	28		108	107	88	88	84
7						46	31	9			80	80	58	23		103	102	83	83	79
8						41	26	n/a			75	75	53	18		98	97	78	78	74
9						36	21				70	70	48	13		93	92	73	73	69
10						31	16				65	65	43	8		88	87	68	68	64
Standard Termination Elevation 4,501 - 10,000 ft																				
Number of 90° Elbows Used	1-1/2" Pipe					2" Pipe					2-1/2" Pipe					3" Pipe				
	Capacity					**Capacity**					**Capacity**					**Capacity**				
	45	**70**	**90**	**110**	**135**	**45**	**70**	**90**	**110**	**135**	**45**	**70**	**90**	**110**	**135**	**45**	**70**	**90**	**110**	**135**
1	25	20	n/a	n/a	n/a	76	61	39	n/a	n/a	110	110	88	53	n/a	133	132	113	113	109
2	20	15				71	56	34			105	105	83	48		128	127	108	108	104
3	15	10				66	51	29			100	100	78	43		123	122	103	103	99
4	10	n/a				61	46	24			95	95	73	38		118	117	98	98	94
5	n/a					56	41	19			90	90	68	33		113	112	93	93	89
6						51	36	14			85	85	63	28		108	107	88	88	84
7						46	31	9			80	80	58	23		103	102	83	83	79
8						41	26	n/a			75	75	53	18		98	97	78	78	74
9						36	21				70	70	48	13		93	92	73	73	69
10						31	16				65	65	43	8		88	87	68	68	64

**Size intake and exhaust pipe length separately. Values in table are for Intake OR Exhaust, not combined total. Both Intake and Exhaust must be same pipe size.*

Table 5A.

Maximum Allowable Intake or Exhaust Vent Length in Feet																				
Concentric Termination at Elevation 0 - 4,500 ft																				
Number of 90° Elbows Used	**1-1/2" Pipe**					**2" Pipe**					**2-1/2" Pipe**					**3" Pipe**				
	Capacity					**Capacity**					**Capacity**					**Capacity**				
	45	**70**	**90**	**110**	**135**	**45**	**70**	**90**	**110**	**135**	**45**	**70**	**90**	**110**	**135**	**45**	**70**	**90**	**110**	**135**
1	25	20	n/a	n/a	n/a	68	53	37	17	n/a	100	100	84	49	n/a	116	116	109	109	100
2	20	15				63	48	32	12		95	95	79	44		111	111	104	104	95
3	15	10				58	43	27	7		90	90	74	39		106	106	99	99	90
4	10	n/a				53	38	22	n/a		85	85	69	34		101	101	94	94	85
5	n/a					48	33	17			80	80	64	29		96	96	89	89	80
6						43	28	12			75	75	59	24		91	91	84	84	75
7						38	23	7			70	70	54	19		86	86	79	79	70
8						33	18	n/a			65	65	49	14		81	81	74	74	65
9						28	13				60	60	44	9		76	76	69	69	60
10						23	8				55	55	39	n/a		71	71	64	64	55
Concentric Termination Elevation 4,501 - 10,000 ft																				
Number of 90° Elbows Used	**1-1/2" Pipe**					**2" Pipe**					**2-1/2" Pipe**					**3" Pipe**				
	Capacity					**Capacity**					**Capacity**					**Capacity**				
	45	**70**	**90**	**110**	**135**	**45**	**70**	**90**	**110**	**135**	**45**	**70**	**90**	**110**	**135**	**45**	**70**	**90**	**110**	**135**
1	25	20	n/a	n/a	n/a	68	53	37	n/a	n/a	100	100	84	49	n/a	116	116	109	109	100
2	20	15				63	48	32			95	95	79	44		111	111	104	104	95
3	15	10				58	43	27			90	90	74	39		106	106	99	99	90
4	10	n/a				53	38	22			85	85	69	34		101	101	94	94	85
5	n/a					48	33	17			80	80	64	29		96	96	89	89	80
6						43	28	12			75	75	59	24		91	91	84	84	75
7						38	23	7			70	70	54	19		86	86	79	79	70
8						33	18	n/a			65	65	49	14		81	81	74	74	65
9						28	13				60	60	44	9		76	76	69	69	60
10						23	8				55	55	39	n/a		71	71	64	64	55

**Size intake and exhaust pipe length separately. Values in table are for Intake OR Exhaust, not combined total. Both Intake and Exhaust must be same pipe size.*

Table 5B.

Maximum Allowable Exhaust Vent Lengths with Furnace Installed in a Closet or Basement Using Ventilated Attic or Crawl Space for Intake Air in Feet

Standard Termination at Elevation 0 - 4,500 ft

Number of 90° Elbows Used	1-1/2" Pipe					2" Pipe					2-1/2" Pipe					3" Pipe				
	Capacity					Capacity					Capacity					Capacity				
	45	70	90	110	135	45	70	90	110	135	45	70	90	110	135	45	70	90	110	135
1	25	20	n/a	n/a	n/a	66	51	29	9	n/a	95	95	73	38	n/a	113	112	93	93	89
2	20	15				61	46	24	4		90	90	68	33		108	107	88	88	84
3	15	10				56	41	19	n/a		85	85	63	28		103	102	83	83	79
4	10	n/a				51	36	14			80	80	58	23		98	97	78	78	74
5	n/a					46	31	9			75	75	53	18		93	92	73	73	69
6						41	26	4			70	70	48	13		88	87	68	68	64
7						36	21	n/a			65	65	43	8		83	82	63	63	59
8						31	16				60	60	38	3		78	77	58	58	54
9						26	11				55	55	33	n/a		73	72	53	53	49
10						21	6				50	50	28			68	67	48	48	44

Standard Termination at Elevation 4,501 - 10,000 ft

Number of 90° Elbows Used	1-1/2" Pipe					2" Pipe					2-1/2" Pipe					3" Pipe				
	Capacity					Capacity					Capacity					Capacity				
	45	70	90	110	135	45	70	90	110	135	45	70	90	110	135	45	70	90	110	135
1	25	20	n/a	n/a	n/a	66	51	29	n/a	n/a	95	95	73	38	n/a	113	112	93	93	89
2	20	15				61	46	24			90	90	68	33		108	107	88	88	84
3	15	10				56	41	19			85	85	63	28		103	102	83	83	79
4	10	n/a				51	36	14			80	80	58	23		98	97	78	78	74
5	n/a					46	31	9			75	75	53	18		93	92	73	73	69
6						41	26	4			70	70	48	13		88	87	68	68	64
7						36	21	n/a			65	65	43	8		83	82	63	63	59
8						31	16				60	60	38	3		78	77	58	58	54
9						26	11				55	55	33	n/a		73	72	53	53	49
10						21	6				50	50	28			68	67	48	48	44

** Size intake and exhaust pipe length separately. Values in table are for Intake OR Exhaust, not combined total. Both Intake and Exhaust must be same pipe size.*

** Additional vent pipe and elbows used to terminate the vent pipe outside the structure must be included in the total vent length calculation.*

Table 5C.

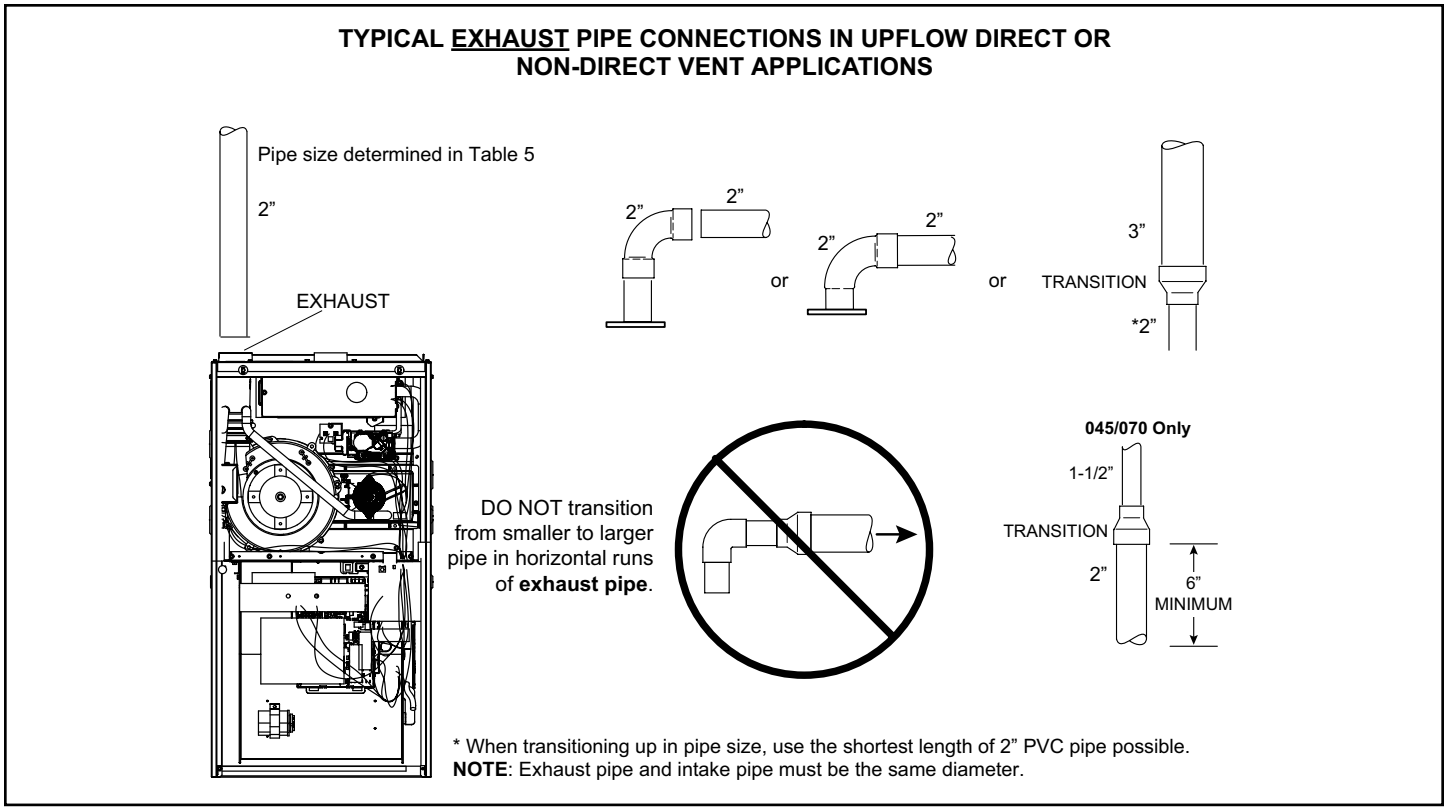

Figure 25. Typical Exhaust Pipe Connections in Upflow Direct or Non-Direct Vent Applications

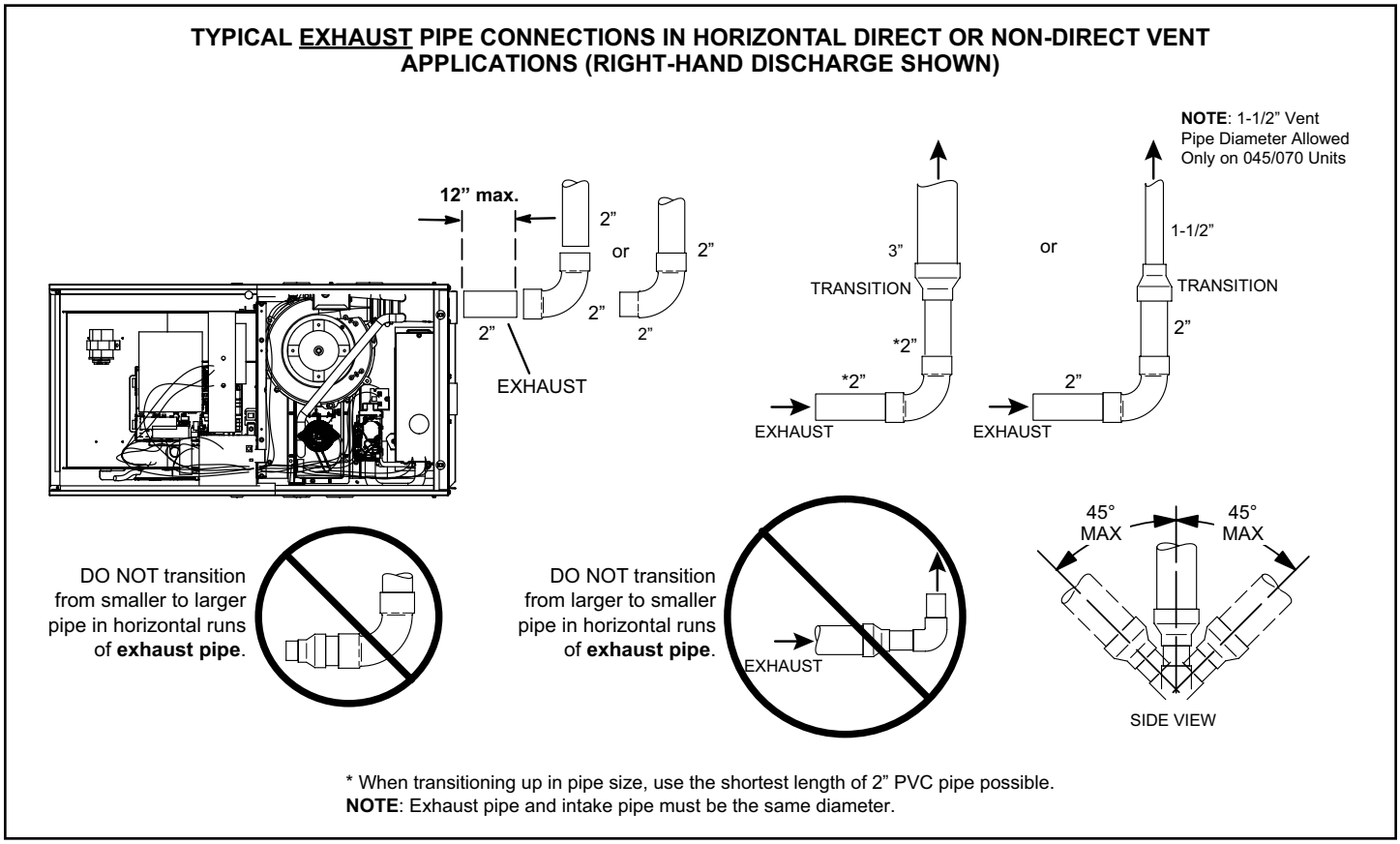

Figure 26. Typical Exhaust Pipe Connections in Horizontal Direct or Non-Direct Vent Applications (Right Hand Discharge Shown)

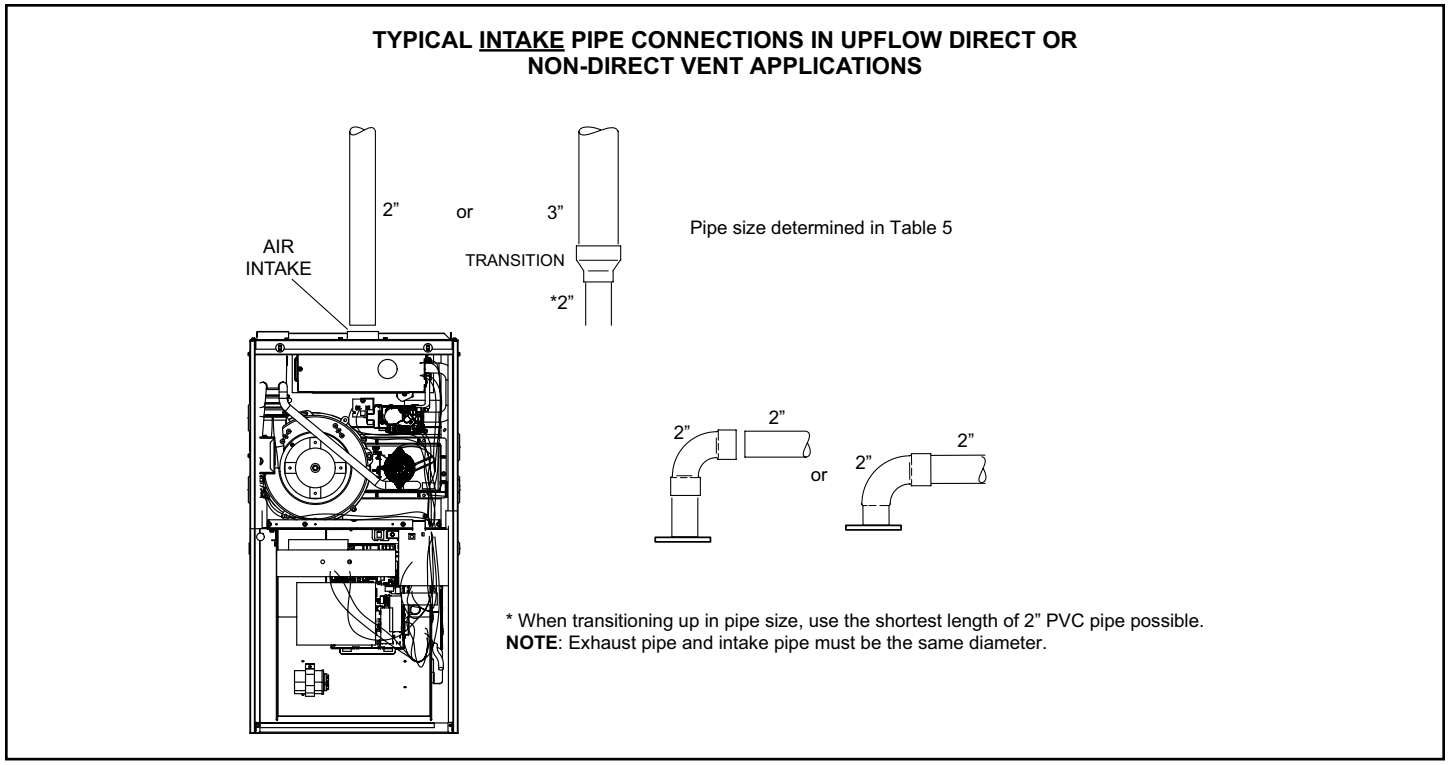

Figure 27. Typical Air Intake Pipe Connections in Upflow Direct Vent Applications

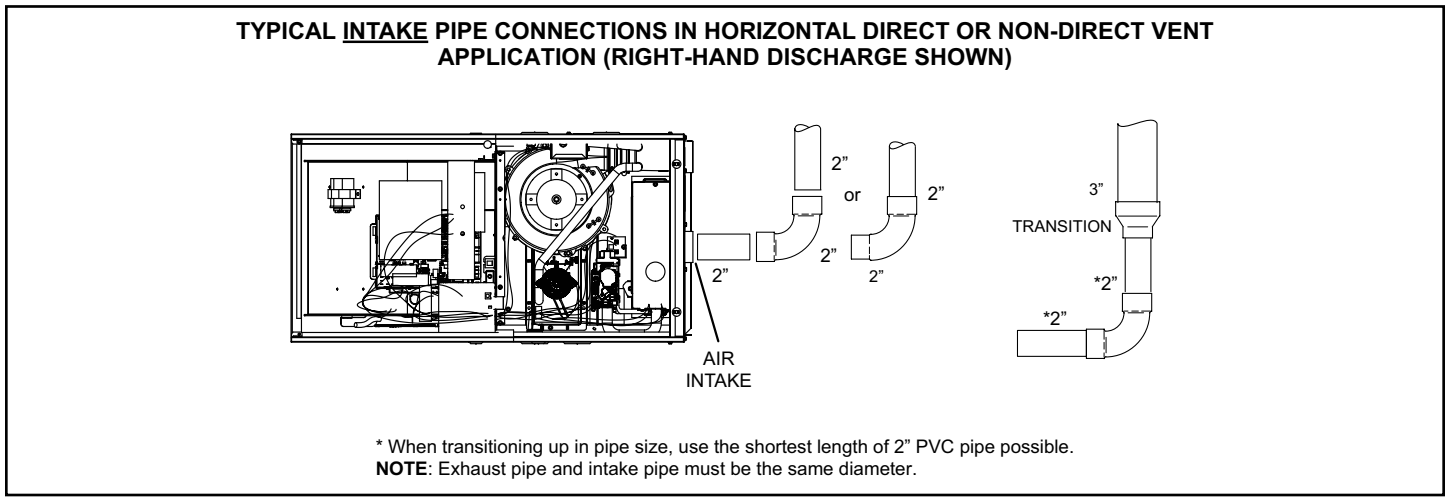

Figure 28. Typical Air Intake Pipe Connections in Horizontal Direct Vent Applications (Right Hand Discharge Shown)

Intake Piping

(Figure 27 through Figure 30)

This gas furnace may be installed in either direct vent or non-direct vent applications. In non-direct vent applications, when intake air will be drawn into the furnace from the surrounding space, the indoor air quality must be considered and guidelines listed in Combustion, Dilution and Ventilation Air section must be followed

Follow the next two steps when installing the unit in Direct Vent applications, where combustion air is taken from outdoors and flue gases are discharged outdoors. The provided air intake screen must not be used in direct vent applications (outdoors).

1. Use transition solvent cement or a sheet metal screw to secure the intake pipe to the inlet air connector.
2. Route piping to outside of structure. Continue with installation following instructions given in general guide lines for piping terminations and in intake and exhaust piping terminations for direct vent sections. Refer to Table 5A through Table 5C for pipe sizes.

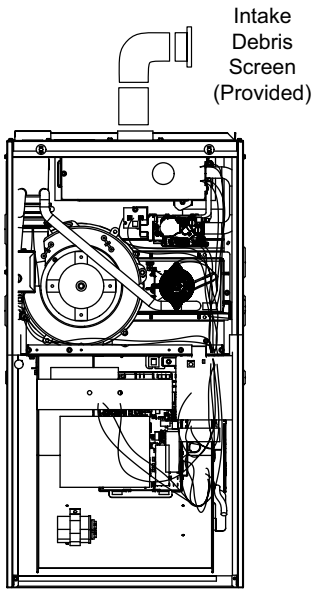

NOTE: *Debris screen and elbow may be rotated, so that screen may be positioned to face forward or to either side.*

Figure 29. Typical Air Intake Pipe Connections Upflow Non-Direct Vent Applications

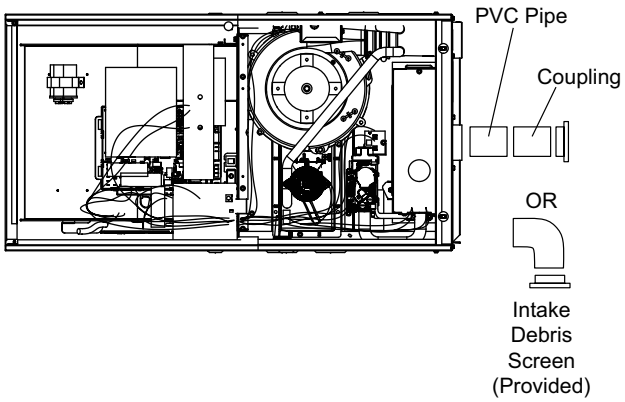

NOTE: *Debris screen may be positioned straight out (preferred) or with an elbow rotated to face down.*

Figure 30. Typical Air Intake Pipe Connections Horizontal Non-Direct Vent Applications (Horizontal Right-Hand Air Discharge Application Shown)

Follow the next steps when installing the unit in Non–Direct Vent applications where combustion air is taken from indoors and flue gases are discharged outdoors.

1. Use field-provided materials and the factory-provided air intake screen to route the intake piping as shown in Figure 29 or Figure 30. Maintain a minimum clearance of 3” (76 mm) around the air intake opening. The air intake opening (with the protective screen) should always be directed forward or to either side in the upflow position, and either straight out or downward in the horizontal position.

   The air intake piping must not terminate too close to the flooring or a platform. Ensure that the intake air inlet will not be obstructed by loose insulation or other items that may clog the debris screen.

2. If intake air is drawn from a ventilated attic (Figure 31) or ventilated crawlspace (Figure 32) the exhaust vent length must not exceed those listed in Table 5C. If 3” diameter pipe is used, reduce to 2” diameter pipe at the termination point to accommodate the debris screen.

3. Use a sheet metal screw to secure the intake pipe to the connector, if desired.

⚠ CAUTION

If this unit is being installed in an application with combustion air coming in from a space serviced by an exhaust fan, power exhaust fan, or other device which may create a negative pressure in the space, take care when sizing the inlet air opening. The inlet air opening must be sized to accommodate the maximum volume of exhaust air as well as the maximum volume of combustion air required for all gas appliances serviced by this space.

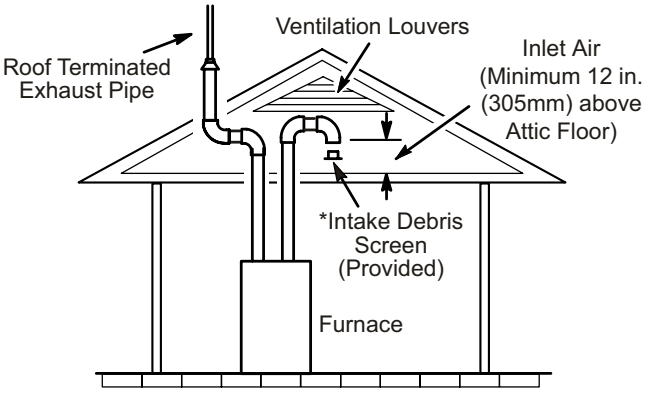

* See Maximum Vent Lengths table

NOTE-The inlet and outlet air openings shall each have a free area of at least one square inch per 4,000 Btu (645mm^2 per 1.17kW) per hour of the total input rating of all equipment in the enclosure.

Figure 31. Equipment in Confined Space (Inlet Air from Ventilated Attic and Outlet Air to Outside)

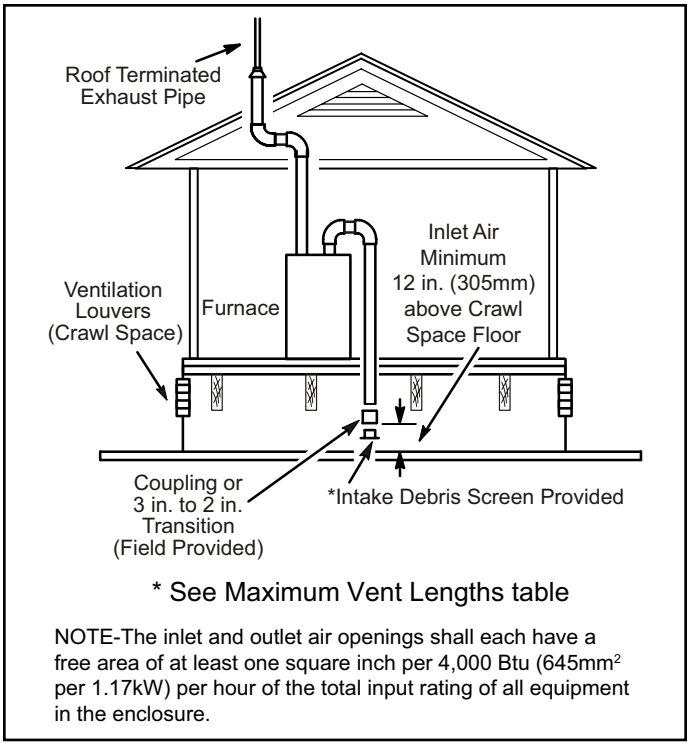

Figure 32. Equipment in Confined Space (Inlet Air from Ventilated Crawlspace and Outlet Air to Outside)

General Guidelines for Vent Terminations

In Non–Direct Vent applications, combustion air is taken from indoors and the flue gases are discharged to the outdoors. This furnace is then classified as a non–direct vent, Category IV gas furnace.

In Direct Vent applications, combustion air is taken from outdoors and the flue gases are discharged to the outdoors. The furnace is then classified as a direct vent, Category IV gas furnace.

In both Non–Direct Vent and Direct Vent applications, the vent termination is limited by local building codes. In the absence of local codes, refer to the current National Fuel Gas Code ANSI Z223-1/NFPA 54 in U.S.A., and current CSA-B149 Natural Gas and Propane Installation Codes in Canada for details.

In Direct Vent applications, the vent termination is limited by local building codes. In the absence of local codes, refer to the current National Fuel Gas Code ANSI Z223-1/NFPA 54 in U.S.A., and current CSA-B149 Natural Gas and Propane Installation Codes in Canada for details.

Position termination according to location given in Figure 34 and Figure 35. In addition, position termination so it is free from any obstructions and 12” above the average snow accumulation.

At vent termination, care must be taken to maintain protective coatings over building materials (prolonged exposure to exhaust condensate can destroy protective coatings). It is recommended that the exhaust outlet not be located within 6 feet (1.8 m) of a condensing unit because the condensate can damage the painted coating.

NOTE: *See Table 6 for maximum allowed exhaust pipe length without insulation in unconditioned space during winter design temperature below 32° F (0° C). If required, exhaust pipe should be insulated with 1/2” (13 mm), Armaflex or equivalent when run through an unconditional area. In extremely cold climate areas with temperature below 20° F (6.7° C) it is recommended that, 3/4” (19 mm) Armaflex or equivalent be used. Insulation on outside runs of exhaust pipe should be painted or wrapped to protect insulation from deterioration in accordance with the insulation manufacturers recommendation. Exhaust pipe insulation may not be necessary in some specific applications.*

NOTE: *During extremely cold temperatures, below approximately 20° F (6.7° C), units with long runs of vent pipe through unconditioned space, even when insulated, may form ice in the exhaust termination that prevents the unit from operating properly. Longer run times of at least 5 minutes will alleviate most icing problems. Also, a heating cable may be installed on exhaust piping and termination to prevent freeze-ups. Heating cable installation kits are available see unit specification sheets for part numbers.*

⚠ IMPORTANT

Do not use screens or perforated metal in exhaust terminations. Doing so will cause freeze-ups and may block the terminations.

⚠ IMPORTANT

For Canadian Installations Only:

In accordance to CSA International B149 installation codes, the minimum allowed distance between the combustion air intake inlet and the exhaust outlet of other appliances shall not be less than 12 inches (305 mm).

Maximum Allowable Exhaust Vent Pipe Length[3] (in ft.) without Insulation in Unconditioned Space for Winter Design Temperatures

Winter Design Temperatures1 ºF (ºC)	Vent Pipe Diameter	Unit Input Size									
		045		070		090		110		135	
		PVC	[2]PP	PVC	[2]PP	PVC	[2]PP	PVC	[2]PP	PVC	[2]PP
32 to 21 (0 to -6)	1-1/2 in.	22	N/A	25	N/A	N/A	N/A	N/A	N/A	N/A	N/A
	2 in.	21	18	33	30	46	42	30	30	N/A	N/A
	2-1/2 in.	16	N/A	26	N/A	37	N/A	36	N/A	N/A	N/A
	3 in.	12	12	21	21	30	30	29	29	42	42
20 to 1 (-7 to -17)	1-1/2 in.	12	N/A	20	N/A	N/A	N/A	N/A	N/A	N/A	N/A
	2 in.	11	9	19	17	28	25	27	24	N/A	N/A
	2-1/2 in.	7	N/A	14	N/A	21	N/A	20	N/A	N/A	N/A
	3 in.	N/A	N/A	9	9	16	16	14	14	23	23
0 to -20 (-18 to -29)	1-1/2 in.	8	N/A	13	N/A	N/A	N/A	N/A	N/A	N/A	N/A
	2 in.	6	4	12	10	19	16	18	15	N/A	N/A
	2-1/2 in.	N/A	N/A	7	N/A	13	N/A	12	N/A	N/A	N/A
	3 in.	N/A	N/A	N/A	N/A	8	8	7	7	13	13

[1] Refer to 99% Minimum Design Temperature table provided in the current edition of the ASHRAE Fundamentals Handbook.

[2] Poly-Propylene vent pipe (PP) by Duravent and Centrotherm

[3] Vent length in table is equivalent length. Each elbow is equivalent to 5ft of straight pipe and should be included when measuring total length.

NOTE - Concentric terminations are the equivalent of 5' and should be considered when measuring pipe length.

NOTE- Maximum uninsulated vent lengths listed may include the termination (vent pipe exterior to the structure) and cannot exceed 5 linear feet or the maximum allowable intake or exhaust vent length listed in Table 5A through Table 5C or Table 6.

NOTE - If insulation is required an unconditioned space, it must be located on the pipe closed to the furnace. See Figure 33.

Table 6.

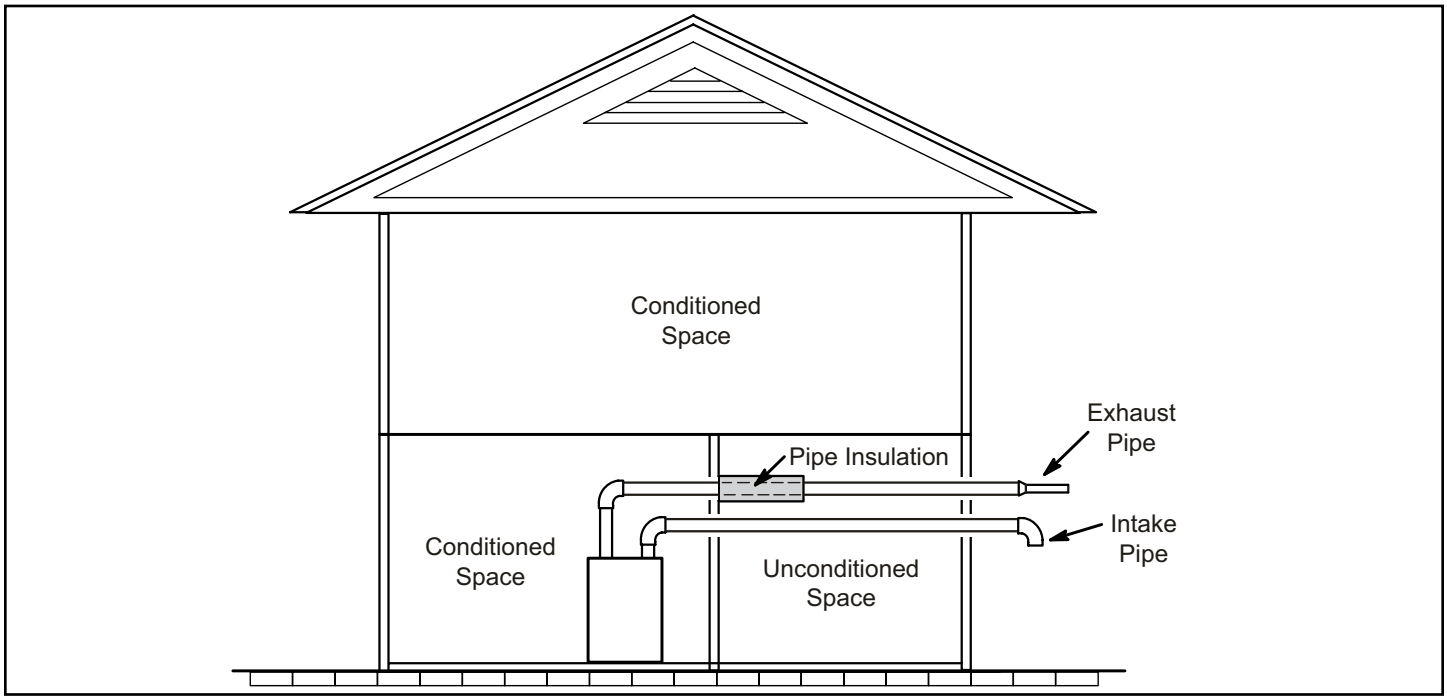

Figure 33. Insulating Exhaust Pipe in an Unconditioned Space

VENT TERMINATION CLEARANCES FOR NON-DIRECT VENT INSTALLATIONS IN THE US AND CANADA

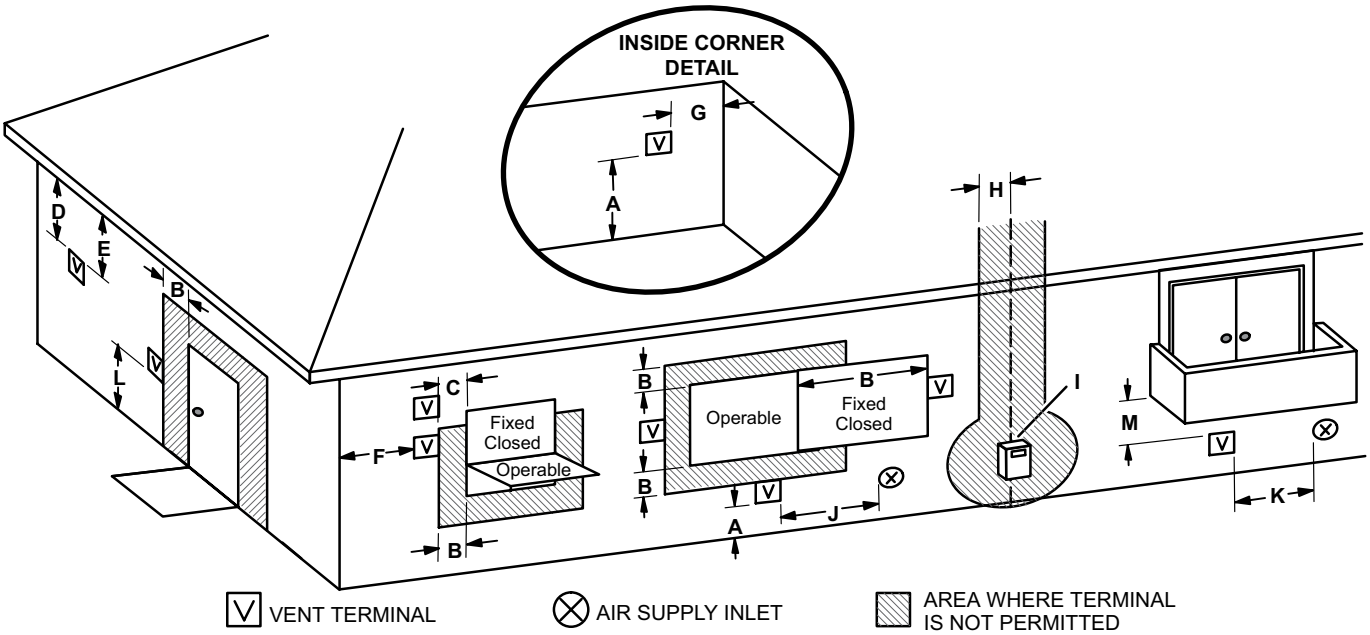

		US Installations[1]	Canadian Installations[2]
A =	Clearance above grade, veranda, porch, deck or balcony	12 inches (305mm) or 12 inches (305mm) above average snow accumulation.	12 inches (305mm) or 12 inches (305mm) above average snow accumulation.
B =	Clearance to window or door that may be opened	4 feet (1.2 m) below or to side of opening; 1 foot (30cm) above opening	6 inches (152mm) for appliances <10,000 Btuh (3kw), 12 inches (305mm) for appliances > 10,000 Btuh (3kw) and <100,000 Btuh (30kw), 36 inches (.9m) for appliances > 100,000 Btuh (30kw)
C =	Clearance to permanently closed window	* 12”	* 12”
D =	Vertical clearance to ventilated soffit located above the terminal within a horizontal distance of 2 feet (610 mm) from the center line of the terminal	* Equal to or greater than soffit depth.	* Equal to or greater than soffit depth.
E =	Clearance to unventilated soffit	* Equal to or greater than soffit depth.	* Equal to or greater than soffit depth.
F =	Clearance to outside corner	* No minimum to outside corner	* No minimum to outside corner
G =	Clearance to inside corner	*	*
H =	Clearance to each side of center line extended above meter / regulator assembly	* 3 feet (.9m) within a height 15 feet (4.5m) above the meter / regulator assembly	3 feet (.9m) within a height 15 feet (4.5m) above the meter / regulator assembly
I =	Clearance to service regulator vent outlet	* 3 feet (.9m)	3 feet (.9m)
J =	Clearance to non-mechanical air supply inlet to building or the combustion air inlet to any other appliance	4 feet (1.2 m) below or to side of opening; 1 foot (30 cm) above opening	6 inches (152mm) for appliances <10,000 Btuh (3kw), 12 inches (305mm) for appliances > 10,000 Btuh (3kw) and <100,000 Btuh (30kw), 36 inches (.9m) for appliances > 100,000 Btuh (30kw)
K =	Clearance to mechanical air supply inlet	3 feet (.9m) above if within 10 feet (3m) horizontally	6 feet (1.8m)
L =	Clearance above paved sidewalk or paved driveway located on public property	7 feet (2.1m)†	7 feet (2.1m)†
M =	Clearance under veranda, porch, deck or balcony	*12 inches (305mm)‡	12 inches (305mm)‡

1 In accordance with the current ANSI Z223.1/NFPA 54 Natural Fuel Gas Code

2 In accordance with the current CSA B149.1, Natural Gas and Propane Installation Code

† A vent shall not terminate directly above a sidewalk or paved driveway that is located between two single family dwellings and serves both dwellings.

‡ Permitted only if veranda, porch, deck or balcony is fully open on a minimum of two sides beneath the floor. Avoiding this location is recommended if possible.

*For clearances not specified in ANSI Z223.1/NFPA 54 or CSA B149.1, clearance will be in accordance with local installation codes and the requirements of the gas supplier and these installation instructions.”

***NOTE** - This figure is intended to illustrate clearance requirements and does not serve as a substitute for locally adopted installation codes.*

Figure 34. Vent Termination Clearances for Non-Direct Vent Installations in the USA and Canada

VENT TERMINATION CLEARANCES FOR DIRECT VENT INSTALLATIONS IN THE USA AND CANADA

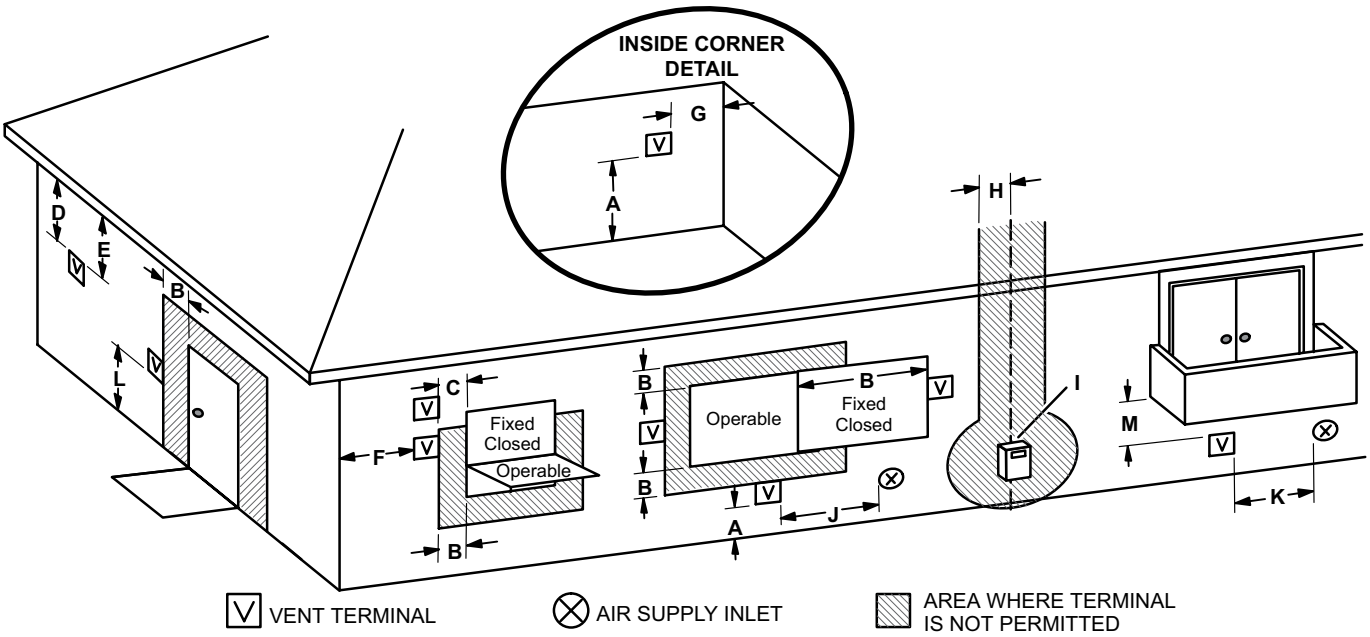

		US Installations[1]	Canadian Installations[2]
A =	Clearance above grade, veranda, porch, deck or balcony	12 inches (305mm) or 12 inches (305mm) above average snow accumulation.	12 inches (305mm) or 12 inches (305mm) above average snow accumulation.
B =	Clearance to window or door that may be opened	6 inches (152mm) for appliances <10,000 Btuh (3kw), 9 inches (228mm) for appliances > 10,000 Btuh (3kw) and <50,000 Btuh (15kw), 12 inches (305mm) for appliances > 50,000 Btuh (15kw)	6 inches (152mm) for appliances <10,000 Btuh (3kw), 12 inches (305mm) for appliances > 10,000 Btuh (3kw) and <100,000 Btuh (30kw), 36 inches (.9m) for appliances > 100,000 Btuh (30kw)
C =	Clearance to permanently closed window	* 12”	* 12”
D =	Vertical clearance to ventilated soffit located above the terminal within a horizontal distance of 2 feet (610mm) from the center line of the terminal	* Equal to or greater than soffit depth	* Equal to or greater than soffit depth
E =	Clearance to unventilated soffit	* Equal to or greater than soffit depth	* Equal to or greater than soffit depth
F =	Clearance to outside corner	* No minimum to outside corner	* No minimum to outside corner
G =	Clearance to inside corner	*	*
H =	Clearance to each side of center line extended above meter / regulator assembly	3 feet (.9m) within a height 15 feet (4.5m) above the meter / regulator assembly	3 feet (.9m) within a height 15 feet (4.5m) above the meter / regulator assembly
I =	Clearance to service regulator vent outlet	* 3 feet (.9m)	3 feet (.9m)
J =	Clearance to non-mechanical air supply inlet to building or the combustion air inlet to any other appliance	6 inches (152mm) for appliances <10,000 Btuh (3kw), 9 inches (228mm) for appliances > 10,000 Btuh (3kw) and <50,000 Btuh (15kw), 12 inches (305mm) for appliances > 50,000 Btuh (15kw)	6 inches (152mm) for appliances <10,000 Btuh (3kw), 12 inches (305mm) for appliances > 10,000 Btuh (3kw) and <100,000 Btuh (30kw), 36 inches (.9m) for appliances > 100,000 Btuh (30kw)
K =	Clearance to mechanical air supply inlet	3 feet (.9m) above if within 10 feet (3m) horizontally	6 feet (1.8m)
L =	Clearance above paved sidewalk or paved driveway located on public property	* 7 feet (2.1m)	7 feet (2.1m)†
M =	Clearance under veranda, porch, deck or balcony	*12 inches (305mm)‡	12 inches (305mm)‡

1 In accordance with the current ANSI Z223.1/NFPA 54 Natural Fuel Gas Code

2 In accordance with the current CSA B149.1, Natural Gas and Propane Installation Code

† A vent shall not terminate directly above a sidewalk or paved driveway that is located between two single family dwellings and serves both dwellings.

‡ Permitted only if veranda, porch, deck or balcony is fully open on a minimum of two sides beneath the floor. Avoiding this location is recommended if possible.

*For clearances not specified in ANSI Z223.1/NFPA 54 or CSA B149.1, clearance will be in accordance with local installation codes and the requirements of the gas supplier and these installation instructions.”

***NOTE** - This figure is intended to illustrate clearance requirements and does not serve as a substitute for locally adopted installation codes.*

Figure 35. Vent Termination Clearances for Direct Vent Installations in the USA and Canada

Details of Intake and Exhaust Piping Terminations for Direct Vent Installations

NOTE: *In Direct Vent installations, combustion air is taken from outdoors and flue gases are discharged to outdoors.*

NOTE: *Flue gas may be slightly acidic and may adversely affect some building materials. If any vent termination is used and the flue gasses may impinge on the building material, a corrosion resistant shield (minimum 24 inches square) should be used to protect the wall surface. If the optional tee is used, the protective shield is recommended. The shield should be constructed using wood, plastic, sheet metal or other suitable material. All seams, joints, cracks, etc. in the affected area should be sealed using an appropriate sealant. See Figure 44.*

Intake and exhaust pipes may be routed either horizontally through an outside wall or vertically through the roof. In attic or closet installations, vertical termination through the roof is preferred. Figure 36 through Figure 43 show typical terminations.

1. Intake and exhaust terminations are not required to be in the same pressure zone. You may exit the intake on one side of the structure and the exhaust on another side (Figure 37). You may exit the exhaust out the roof and the intake out the side of the structure (Figure 38).
2. Intake and exhaust pipes should be placed as close together as possible at termination end (refer to illustrations). Minimum separation is 3” (76 mm) on roof terminations and 6” (152 mm) on sidewall terminations.
3. On roof terminations, the intake piping should terminate straight down using two 90° elbows (see Figure 36).
4. Exhaust piping must terminate straight out or up as shown. A reducer may be required on the exhaust piping at the point where it exits the structure to improve the velocity of exhaust away from the intake piping. See Table 7.

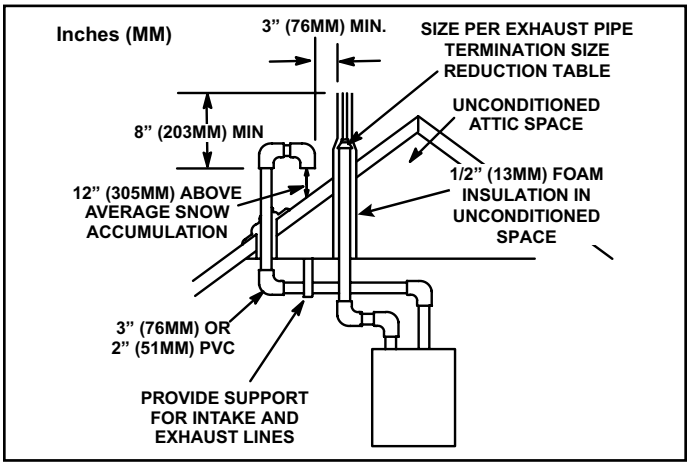

Figure 36. Direct Vent Roof Termination Kit

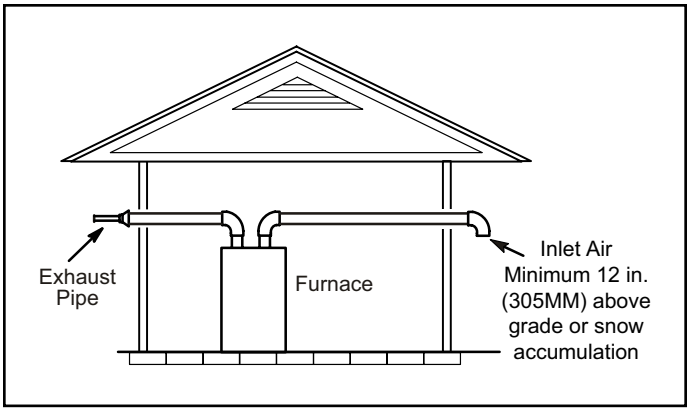

Figure 37. Exiting Exhaust and Intake Vent (no common pressure zone)

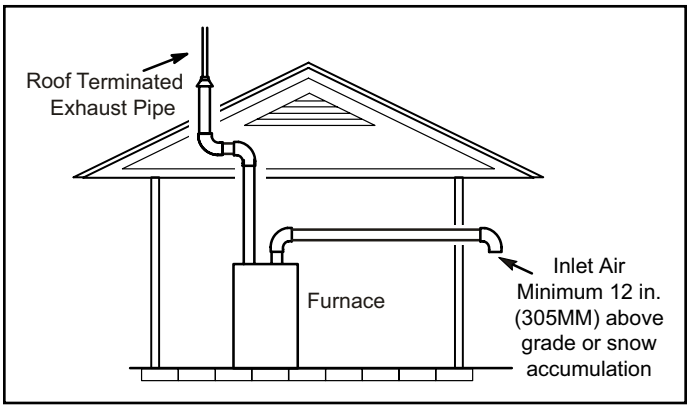

Figure 38. Exiting Exhaust and Intake Vent (no common pressure zone)

Capacity	Exhaust Pipe Size	Termination Pipe Size
045 and 070	2” (51mm), 2-1/2” (64mm), 3” (76mm)	1-1/2” (38mm)
090		2” (51mm)
110		
135	3” (76mm)	
* Units with the flush mount termination must use the 1-1/2” accelerator supplied with the kit		

Table 7. Exhaust Pipe Termination Size Reduction

NOTE: *Care must be taken to avoid recirculation of exhaust back into intake pipe.*

5. On field supplied terminations for sidewall exit, exhaust piping may extend a maximum of 12 inches (305 mm) for 2” PVC and 20 inches (508 mm) for 3” (76 mm) PVC beyond the outside wall. Intake piping should be as short as possible. See Figure 44.
6. On field supplied terminations, a minimum distance between the end of the exhaust pipe and the end of the intake pipe without a termination elbow is 8” and a minimum distance of 6” with a termination elbow. See Figure 44.

7. If intake and exhaust piping must be run up a side wall to position above snow accumulation or other obstructions, piping must be supported every 24" (610 mm) as shown in Figure 44. Exhaust and intake piping that is run up a wall is considered to be in an unconditioned space, so piping should be sized according to Table 6. The intake piping may be equipped with a 90° elbow turndown. Using turndown will add 5 feet (1.5 m) to the equivalent length of the pipe.
8. A multiple furnace installation may use a group of up to four terminations assembled together horizontally, as shown in Figure 42.

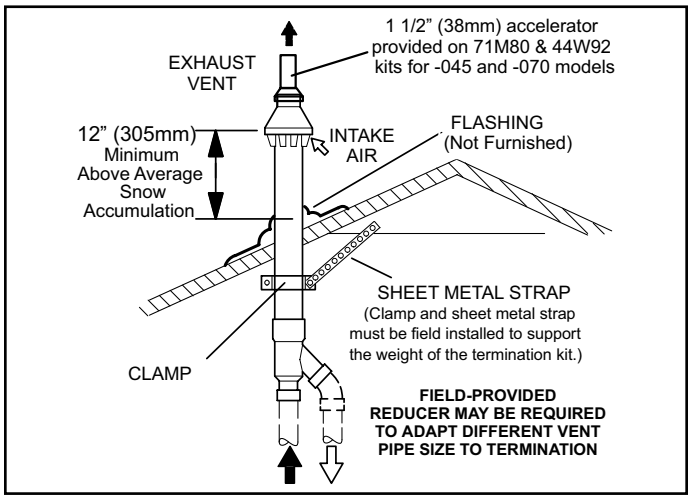

Figure 39. Direct Vent Concentric Rooftop Termination 71M80, 69M29 or 60L46 (US) 41W92 or 41W93 (Canada)

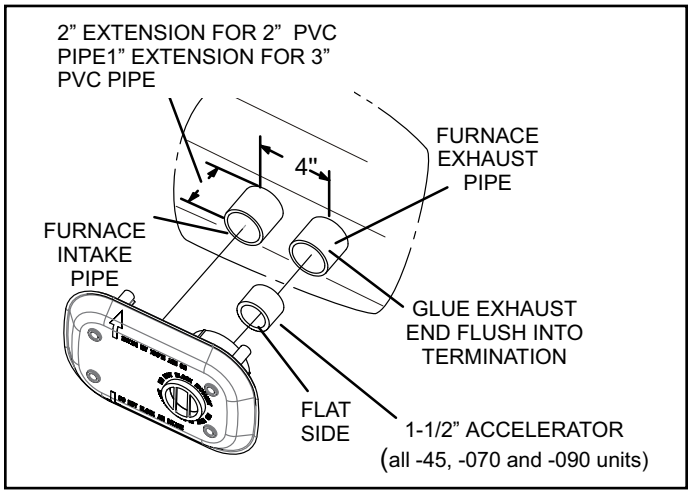

Figure 40. Flush-Mount Side Wall Termination 51W11

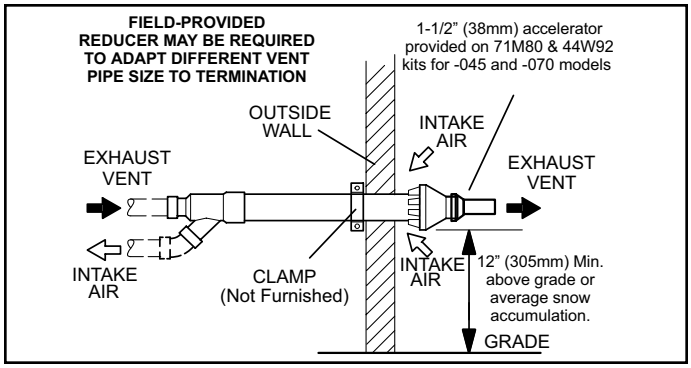

Figure 41. Direct Vent Concentric Wall Termination 71M80, 69M29 OR 60L46 (US) 41W92 or 41W93 (Canada)

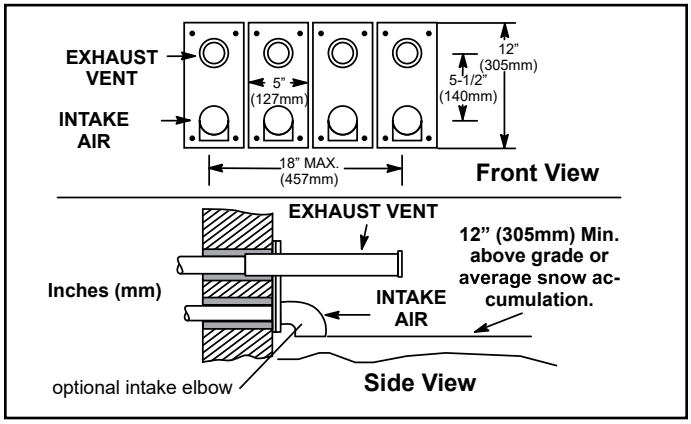

Figure 42. Optional Vent Termination for Multiple Unit Installation of Direct Vent Wall Termination

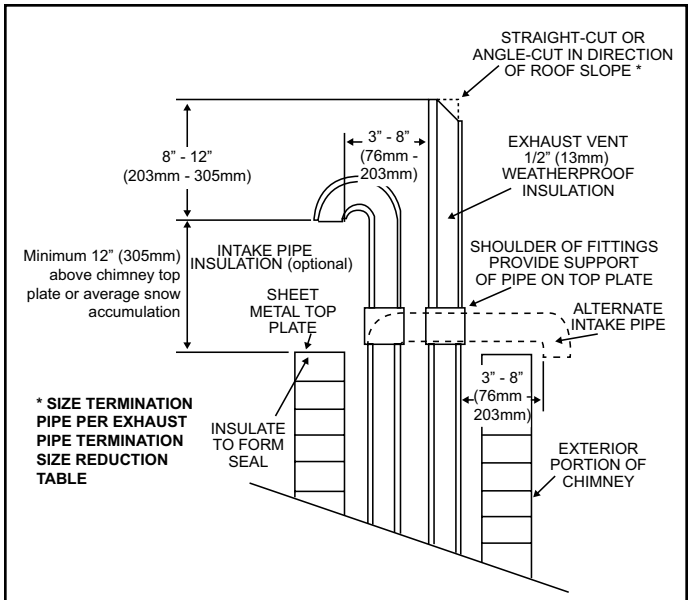

NOTE: *Do not discharge exhaust gases directly into any chimney or vent stack. If vertical discharge through an existing unused chimney or stack is required, insert piping inside chimney until the pipe open end is above top of chimney and terminates as illustrated. In any exterior portion of chimney, the exhaust vent must be insulated.*

Figure 43. Direct Vent Application Using Existing Chimney

FIELD FABRICATED WALL TERMINATION

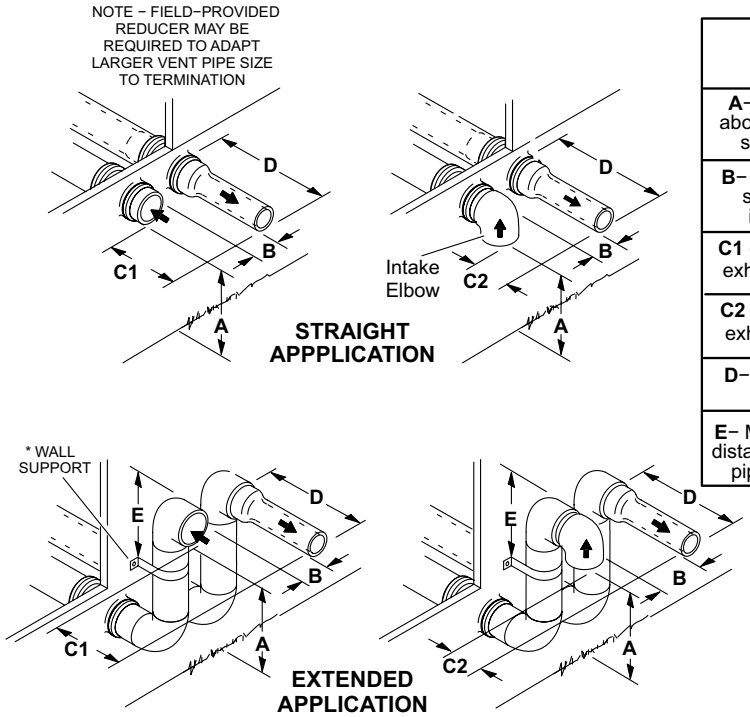

	2” (51mm) Vent Pipe	3” (76mm) Vent Pipe
A− Minimum clearance above grade or average snow accumulation	12” (305 mm)	12” (305 mm)
B− Maximum horizontal separation between intake and exhaust	6” (152 mm)	6” (152 mm)
C1 -Minimum from end of exhaust to inlet of intake	8” (203 mm)	8” (203 mm)
C2 -Minimum from end of exhaust to inlet of intake	6” (152 mm)	6” (152 mm)
D− Maximum exhaust pipe length	12” (305 mm)	20” (508 mm)
E− Maximum wall support distance from top of each pipe (intake/exhaust)	6” (152 mm)	6” (152 mm)

* Use wall support every 24” (610 mm). Use two wall supports if extension is greater than 24” (610 mm) but less than 48” (1219 mm).
NOTE − One wall support must be within 6” (152 mm) from top of each pipe (intake and exhaust) to prevent movement in any direction.

ALTERNATE TERMINATIONS (TEE & FORTY−FIVE DEGREE ELBOWS ONLY)

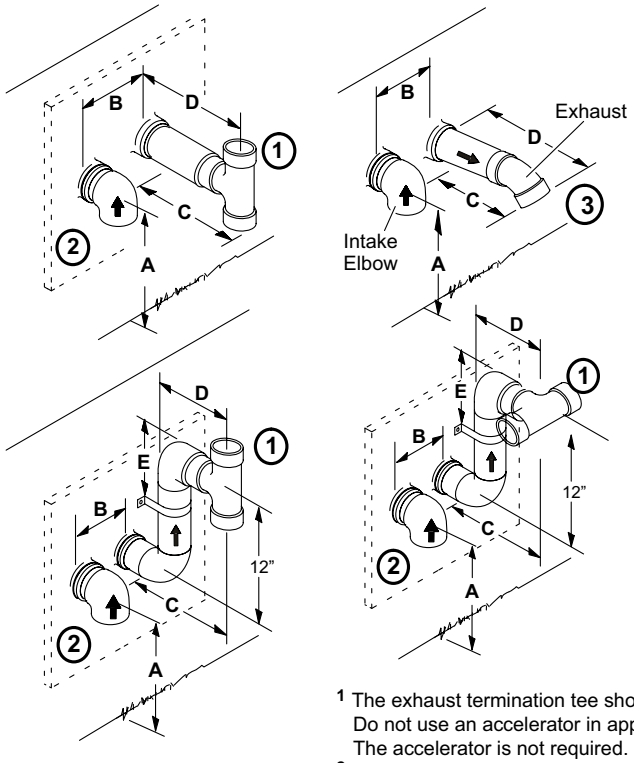

	2” (51MM) Vent Pipe	3” (76MM) Vent Pipe
A− Clearance above grade or average snow accumulation	12” (305 mm) Min.	12” (305 mm) Min.
B− Horizontal separation between intake and exhaust	6” (152 mm) Min. 24” (610 mm) Max.	6” (152 mm) Min. 24” (610 mm) Max.
C− Minimum from end of exhaust to inlet of intake	9” (227 mm) Min.	9” (227 mm) Min.
D− Exhaust pipe length	12” (305 mm) Min. 16” (405 mm) Max.	12” (305 mm) Min. 20” (508 mm) Max.
E− Wall support distance from top of each pipe (intake/exhaust)	6” (152 mm) Max.	6” (152 mm) Max.

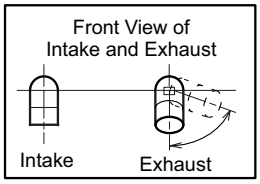

[1] The exhaust termination tee should be connected to the 2” or 3” PVC flue pipe as shown in the illustration. Do not use an accelerator in applications that include an exhaust termination tee. The accelerator is not required.

[2] As required. Flue gas may be acidic and may adversely affect some building materials. If a side wall vent termination is used and flue gases will impinge on the building materials, a corrosion-resistant shield (24 inches square) should be used to protect the wall surface. If optional tee is used, the protective shield is recommended. The shield should be constructed using wood, sheet metal or other suitable material. All seams, joints, cracks, etc. in affected area, should be sealed using an appropriate sealant.

[3] Exhaust pipe 45° elbow can be rotated to the side away from the combustion air inlet to direct exhaust away from adjacent property. The exhaust must never be directed toward the combustion air inlet.

Figure 44.

Details of Exhaust Piping Terminations for Non-Direct Vent Applications

Exhaust pipes may be routed either horizontally through an outside wall or vertically through the roof. In attic or closet installations, vertical termination through the roof is preferred. Figure 45 through Figure 48 show typical terminations.

1. Exhaust piping must terminate straight out or up as shown. The termination pipe must be sized as listed in Table 7. The specified pipe size ensures proper velocity required to move the exhaust gases away from the building.
2. On field supplied terminations for side wall exit, exhaust piping may extend a maximum of 12 inches (305 mm) for 2” PVC and 20” (508 mm) for 3” (76 mm) PVC beyond the outside wall. See Figure 44.
3. If exhaust piping must be run up a sidewall to position above snow accumulation or other obstructions, piping must be supported every 24” (610 mm) as shown in Figure 47. When exhaust piping must be run up an outside wall, any reduction in exhaust pipe size must be done after the final elbow.

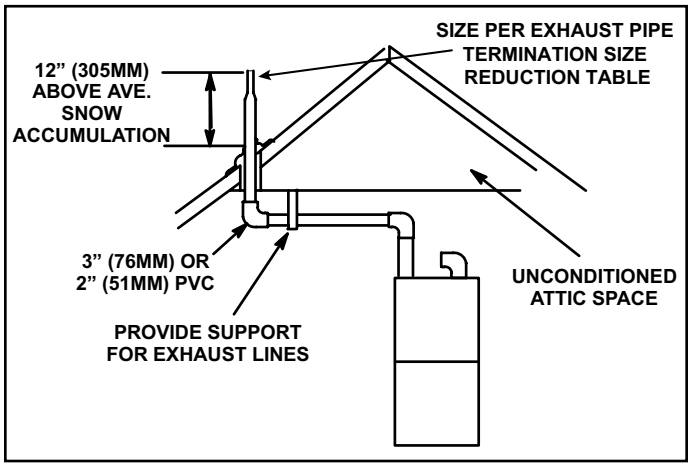

Figure 45. Non-Direct Vent Roof Termination Kit

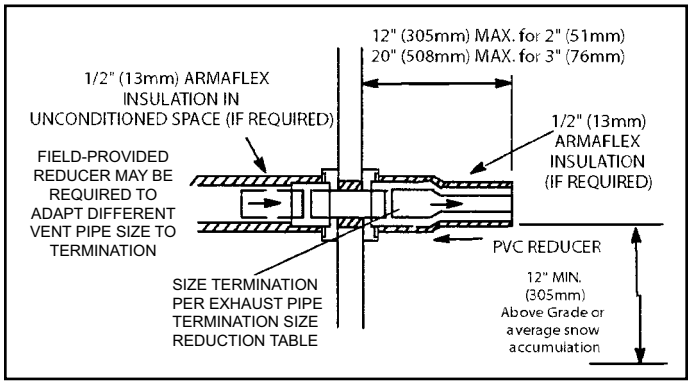

Figure 46. Non-Direct Vent Field Supplied Wall Termination

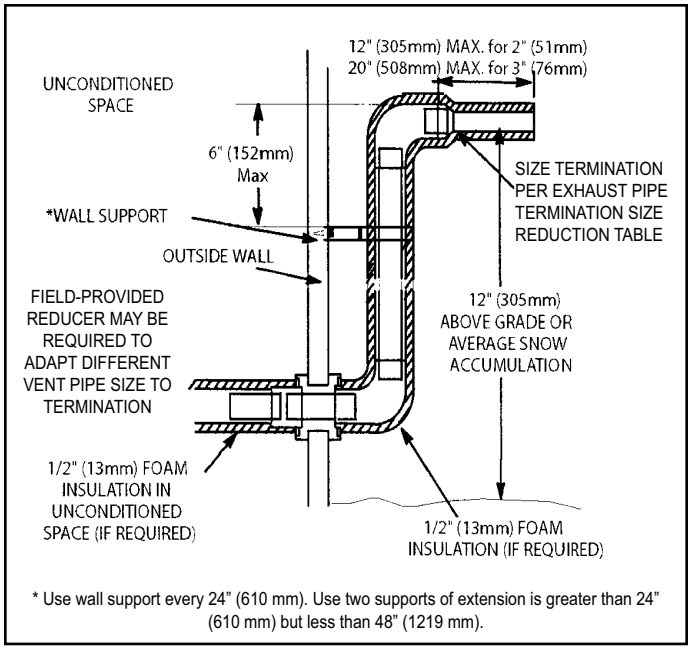

Figure 47. Non-Direct Vent Field Supplied Wall Termination Extended

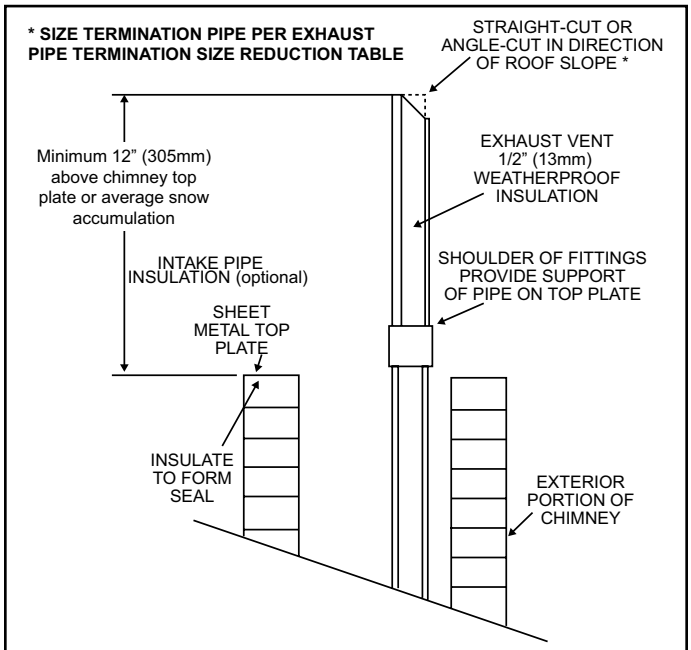

NOTE: *Do not discharge exhaust gases directly into any chimney or vent stack. If vertical discharge through an existing unused chimney or stack is required, insert piping inside chimney until the pipe open end is above top of chimney and terminate as illustrated. In any exterior portion of chimney, the exhaust vent must be insulated.*

Figure 48. Non-Direct Vent Application Using Existing Chimney

Exhaust through Crawl Space Vent Option

All 33” condensing gas furnaces (92%+) are now approved to be vented down through a crawl space. Ensure a vent pipe drain kit, 51W18 (USA) or 15Z70 (Canada), is used as directed through the floor joists and into the crawl space. See the following figures.

Consult the vent tables for vent lengths and approved materials.

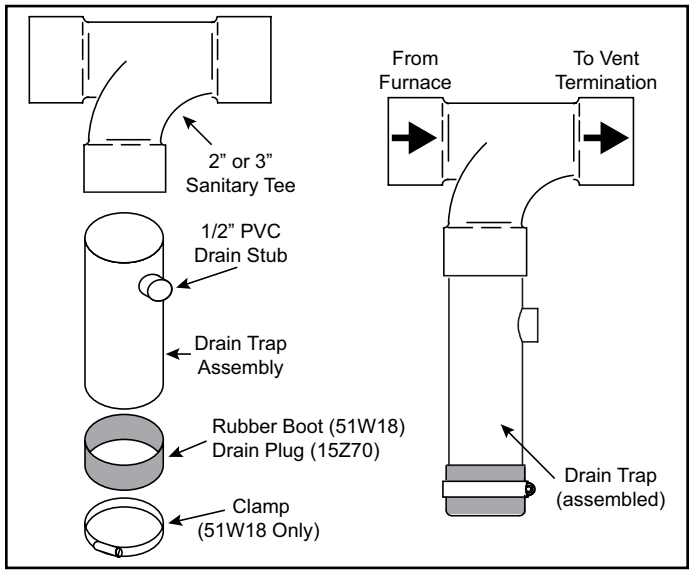

Figure 49. Kit 51W18 (USA) / 15Z70 (Canada) Parts Identification and Assembly

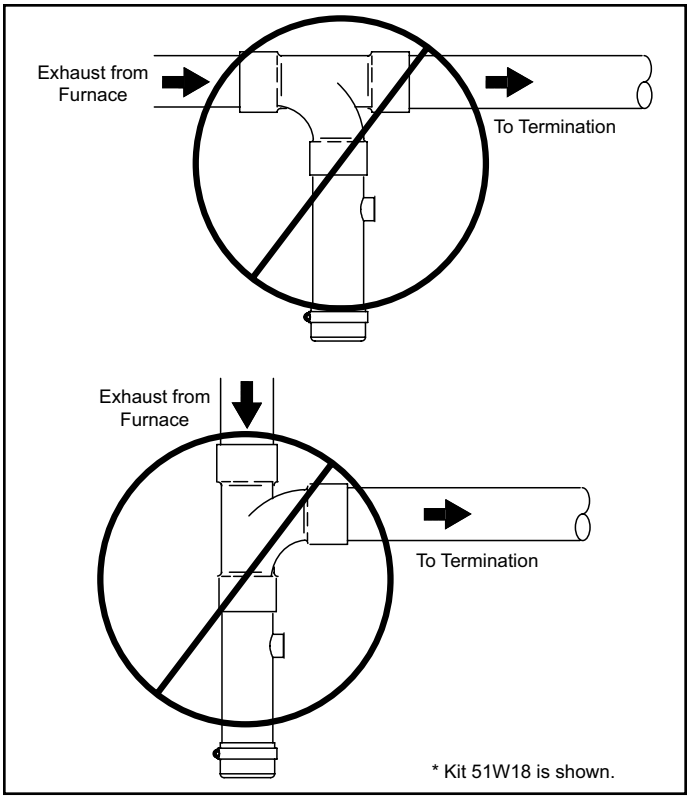

Figure 50. Crawl Space Vent Pipe Drain Trap Assembled Incorrectly

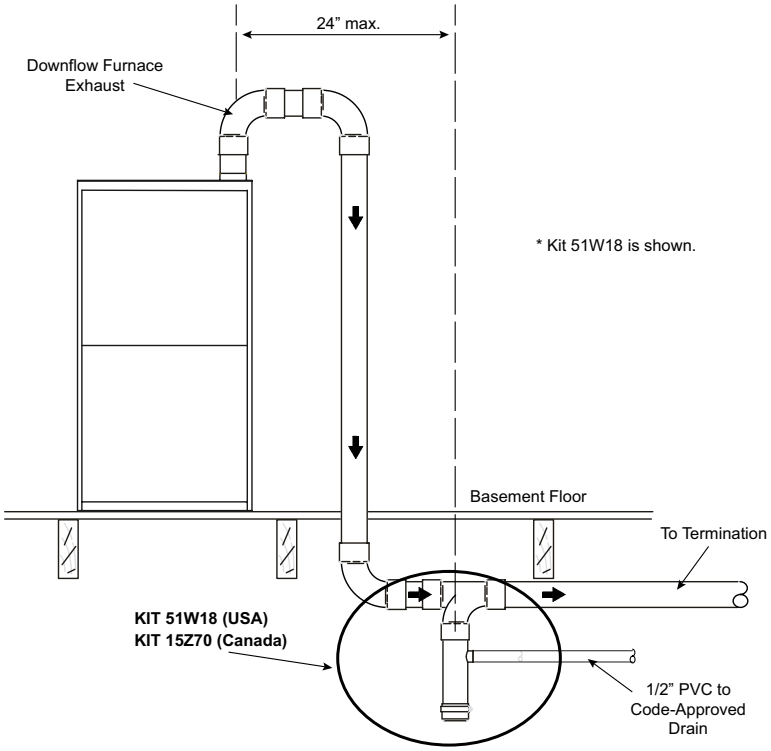

NOTE: *Upflow furnaces exhaust from the left side. All dimensions shown are typical for upflow or downflow furnaces.*

NOTE: *All horizontal runs of exhaust pipe must slope back toward the kit a minimum of 1/4” (6mm) for each 12” (305mm) to ensure drainage.*

Figure 51. Upflow or Downflow Furnace with Exhaust through Crawl Space

Condensate Piping

This unit is designed for either right or left side exit of condensate piping in upflow applications. In horizontal applications, the condensate trap must extend below the unit. An 8” service clearance is required for the condensate trap. Refer to Figure 52 and Figure 54 for condensate trap locations. Figure 58 shows trap assembly using 1/2” PVC or 3/4” PVC.

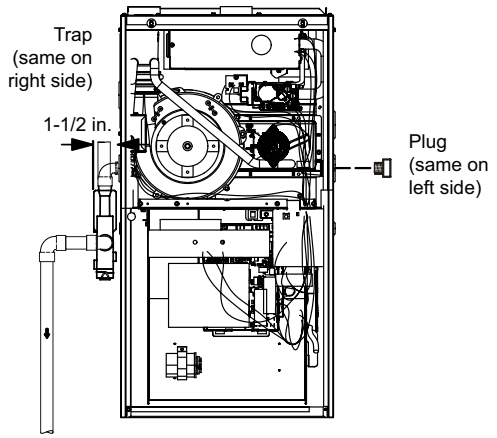

NOTE: *In upflow applications where side return air filter is installed on same side as the condensate trap, filter rack **MUST** be installed beyond condensate trap or trap must be relocated to avoid interference.*

Figure 52. Condensate Trap and Plug Locations (Unit shown in upflow position)

NOTE: *If necessary the condensate trap may be installed up to 5’ away from the furnace. Use PVC pipe to connect trap to furnace condensate outlet. Piping from furnace must slope down a minimum of 1/4” per ft. toward trap.*

1. Determine which side condensate piping will exit the unit, location of trap, field-provided fittings and length of PVC pipe required to reach available drain.
2. Use a large flat head screw driver or a 1/2” drive socket extension and remove plug (Figure 52) from the cold end header box at the appropriate location on the side of the unit. Install provided 3/4 NPT street elbow fitting into cold end header box. Use Teflon tape or appropriate pipe dope.
3. Install the cap over the clean out opening at the base of the trap. Secure with clamp. See Figure 58.
4. Install drain trap using appropriate PVC fittings, glue all joints. Glue the provided drain trap as shown in Figure 58. Route the condensate line to an open drain. Condensate line must maintain a 1/4” downward slope from the furnace to the drain.

⚠ CAUTION

Do not use copper tubing or existing copper condensate lines for drain line.

5. Figure 54 and Figure 55 show the furnace and evaporator coil using a separate drain. If necessary the condensate line from the furnace and evaporator coil can drain together. See Figure 56 and Figure 57.

   Upflow furnace (Figure 53) - In upflow furnace applications the field provided vent must be a minimum 1” to a maximum 2” length above the condensate drain outlet connection. Any length above 2” may result in a flooded heat exchanger if the combined primary drain line were to become restricted.

   Horizontal furnace (Figure 54) - In horizontal furnace applications the field provided vent must be minimum 4” to a maximum 5” length above the condensate drain outlet connection. Any length above 5” may result in a flooded heat exchanger if the combined primary drain line were to become restricted.

   NOTE: *In horizontal applications it is recommended to install a secondary drain pan underneath the unit and trap assembly.*

   NOTE: *Vinyl tubing may be used for condensate drain. Tubing must be 1-1/4” o.d. X 1” i.d. and should be attached to the drain on the trap using a hose clamp.*

6. If unit will be started immediately upon completion of installation, prime trap per procedure outlined in Unit Start-Up section.

Condensate line must slope downward away from the trap to drain. If drain level is above condensate trap, condensate pump must be used. Condensate drain line should be routed within the conditioned space to avoid freezing of condensate and blockage of drain line. If this is not possible, a heat cable kit may be used on the condensate trap and line. Heating cable kit is available in various lengths; 6 ft. (1.8 m) - kit no. 26K68; 24 ft. (7.3 m) - kit no. 26K69; and 50 ft. (15.2 m) - kit no. 26K70.

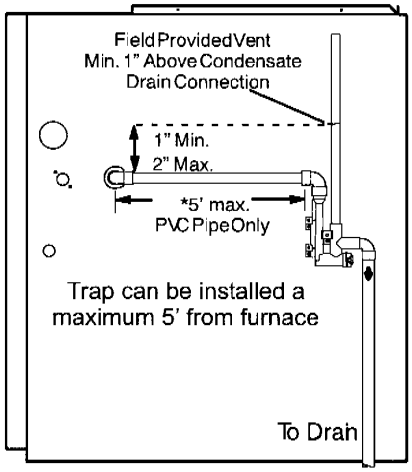

*Piping from furnace must slope down a minimum of 1/4” per ft. toward trap.

Figure 53. Condensate Trap Locations (Unit shown in upflow position with remote trap)

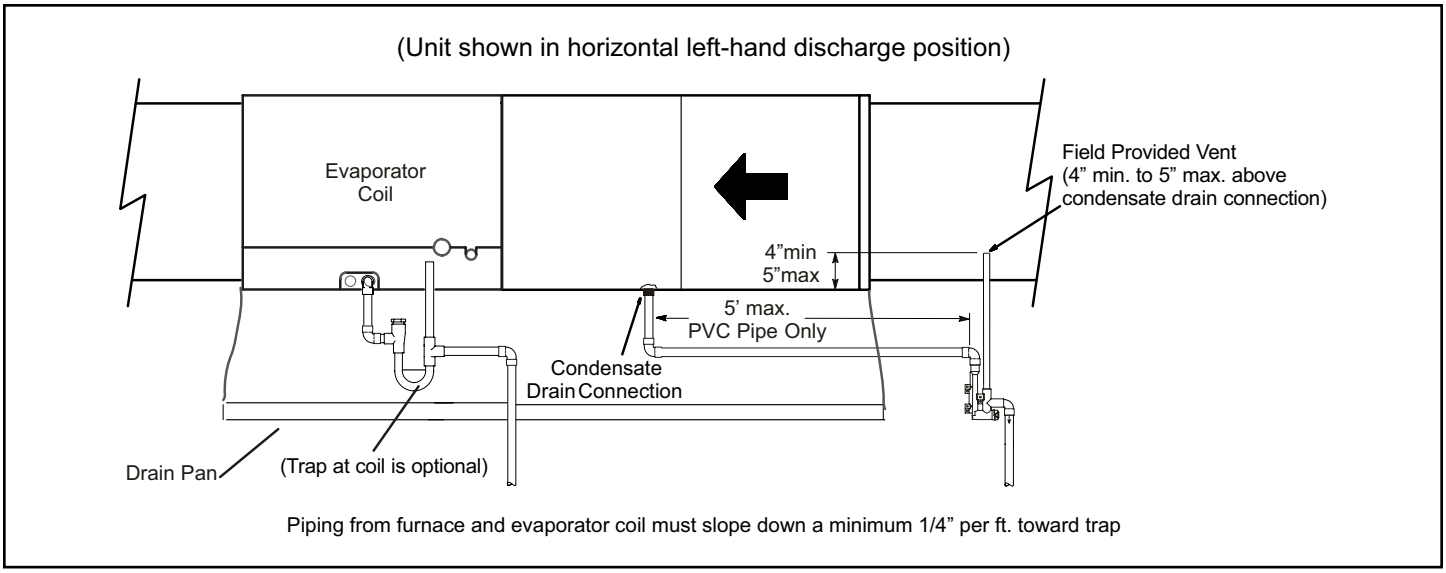

Figure 54. Furnace with Evaporator Coil Using a Separate Drain

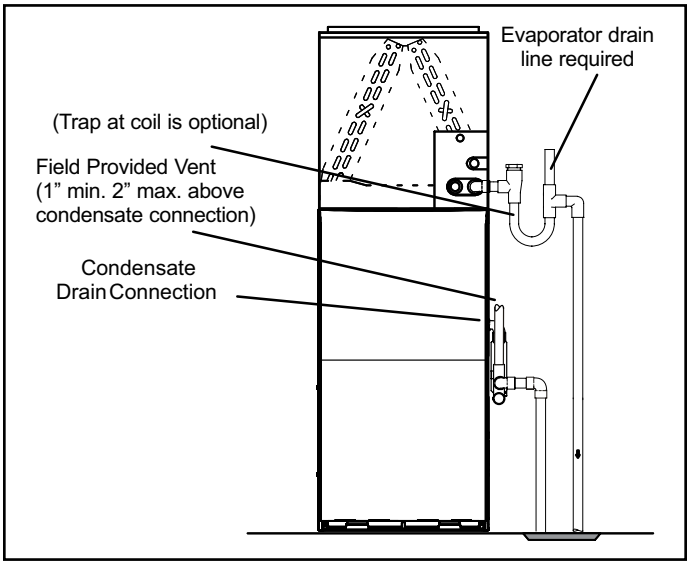

Figure 55. Furnace with Evaporator Coil Using a Separate Drain

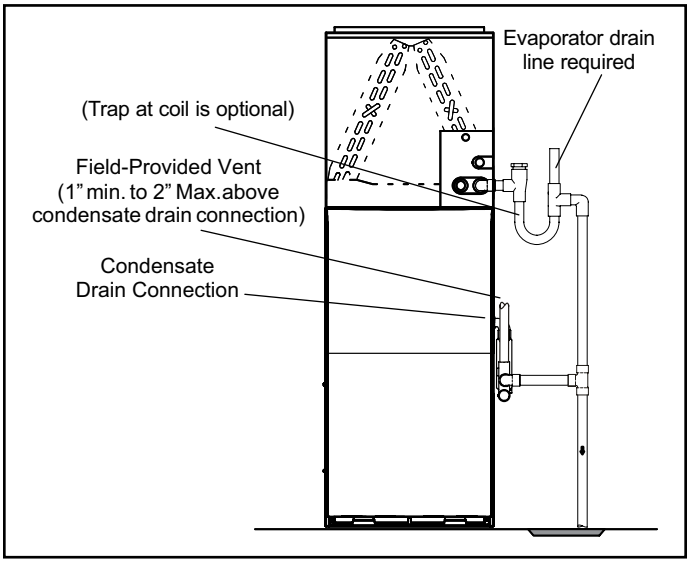

Figure 56. Furnace with Evaporator Coil Using a Common Drain

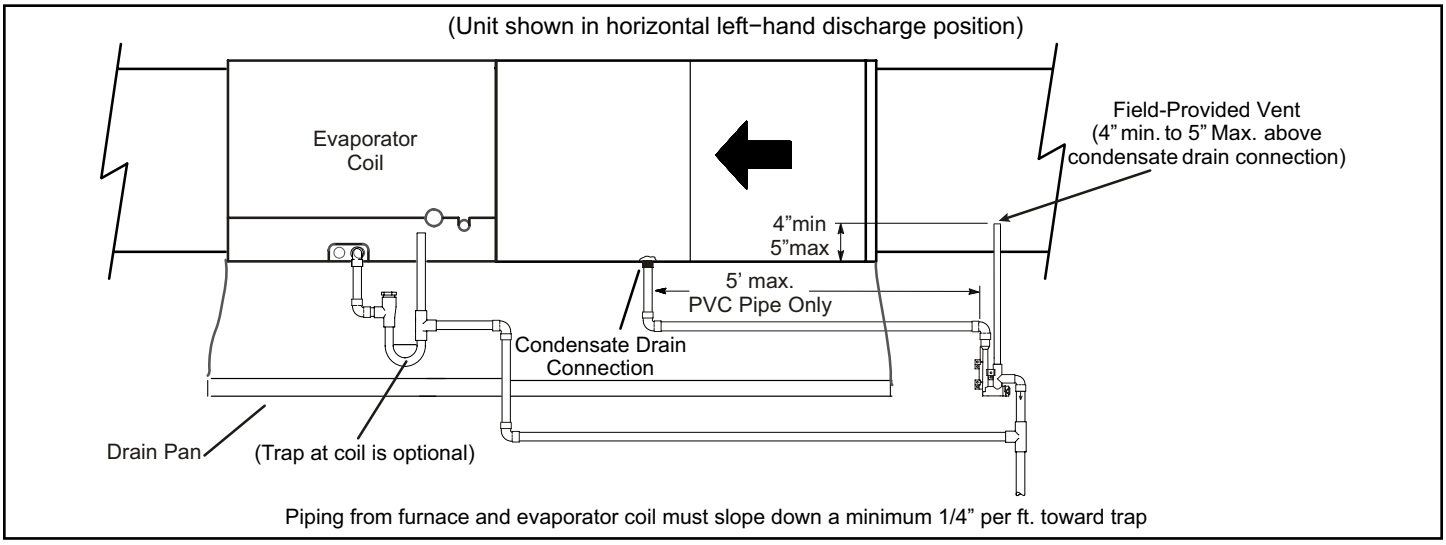

Figure 57. Furnace with Evaporator Coil Using a Common Drain

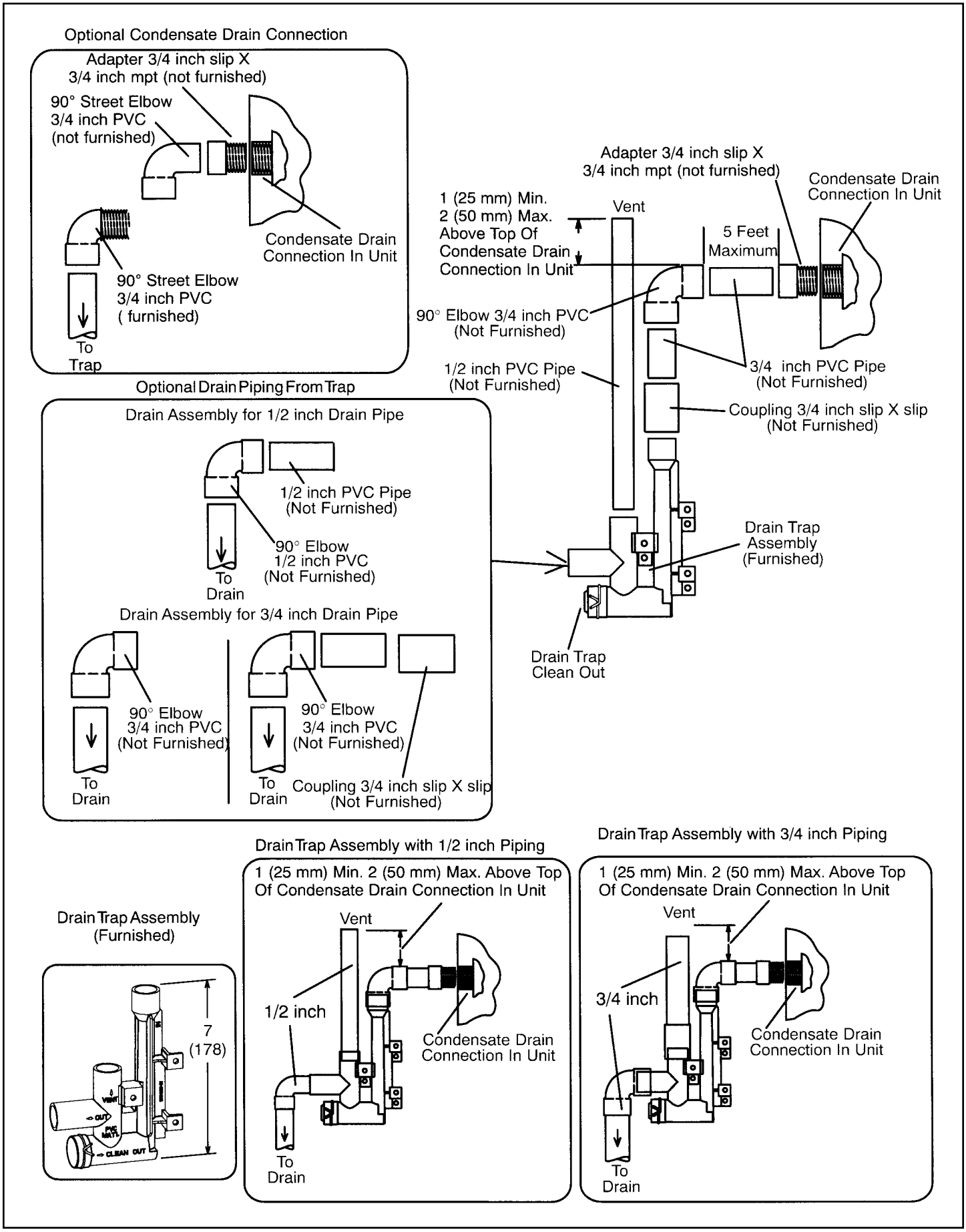

Figure 58. Trap / Drain Assembly Using 1/2" PVC or 3/4" PVC

⚠ IMPORTANT

When combining the furnace and evaporator coil drains together, the A/C condensate drain outlet must be vented to relieve pressure in order for the furnace pressure switch to operate properly.

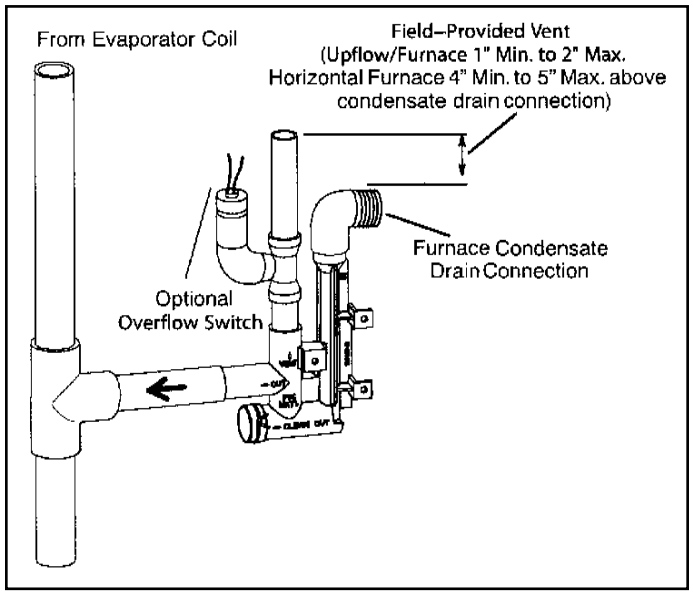

Figure 59. Condensate Trap with Optional Overflow Switch

Gas Piping

⚠ CAUTION

If a flexible gas connector is required or allowed by the authority that has jurisdiction, black iron pipe shall be installed at the gas valve and extend outside the furnace cabinet. The flexible connector can then be added between the black iron pipe and the gas supply line.

⚠ WARNING

Do not exceed 600 in.-lbs. (50 ft.-lbs.) torque when attaching the gas piping to the gas valve.

1. Gas piping may be routed into the unit through either the left or right hand side. Supply piping enters into the gas valve from the side of the valve as shown in Figure 61 and Figure 62.

⚠ IMPORTANT

A low inlet pressure switch in LP/propane applications is recommended.

2. When connecting gas supply, factors such as length of run, number of fittings and furnace rating must be considered to avoid excessive pressure drop. Table 8 lists recommended pipe sizes for typical applications.

   NOTE: *Use two wrenches when connecting gas piping to avoid transferring to the manifold.*

3. Gas piping must not run in or through air ducts, clothes chutes, chimneys or gas vents, dumb waiters or elevator shafts. Center gas line through piping hole. Gas line should not touch side of unit. See Figure 61 and Figure 62.
4. Piping should be sloped 1/4 " per 15 feet (6 mm per 5.6 m) upward toward the gas meter from the furnace. The piping must be supported at proper intervals, every 8 to 10 feet (2.44 to 3.05 m), using suitable hangers or straps. Install a drip leg in vertical pipe runs to serve as a trap for sediment or condensate.
5. A 1/8" N.P.T. plugged tap or pressure post is located on the gas valve to facilitate test gauge connection. See Figure 60.
6. In some localities, codes may require installation of a manual main shut-off valve and union (furnished by installer) external to the unit. Union must be of the ground joint type.

⚠ IMPORTANT

Compounds used on threaded joints of gas piping must be resistant to the actions of liquified petroleum gases.

Leak Check

After gas piping is completed, carefully check all field-installed piping connections for gas leaks. Use a commercially available leak detecting solution specifically manufactured for leak detection. Never use an open flame to test for gas leaks.

The furnace must be isolated from the gas supply system by closing the individual manual shut-off valve during any gas supply system at pressures greater than or equal to 1/2 psig (3.48 kPa, 14 inches w.c.). This furnace and its components are designed, manufactured and independently certified to comply with all applicable ANSI/CSA standards. A leak check of the furnace and its components is not required.

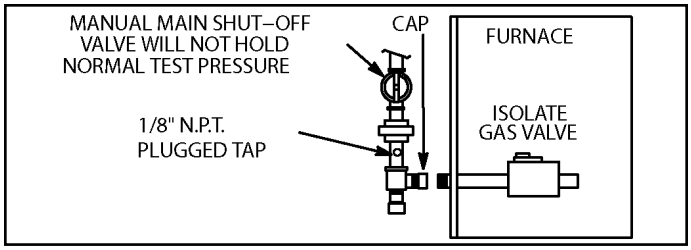

Figure 60.

⚠ IMPORTANT

When testing pressure of gas lines, gas valve must be disconnected and isolated. See Figure 60. Gas valves can be damaged if subjected to pressures greater than 1/2 psig (3.48 kPa).

⚠ IMPORTANT

FIRE OR EXPLOSION HAZARD

Failure to follow the safety warnings exactly could result in serious injury, death, or property damage. Never use an open flame to test for gas leaks. Check all connections using a commercially available soap solution made specifically for leak detection. Some soaps used for leak detection are corrosive to certain metals. Carefully rinse piping thoroughly after leak test has been completed.

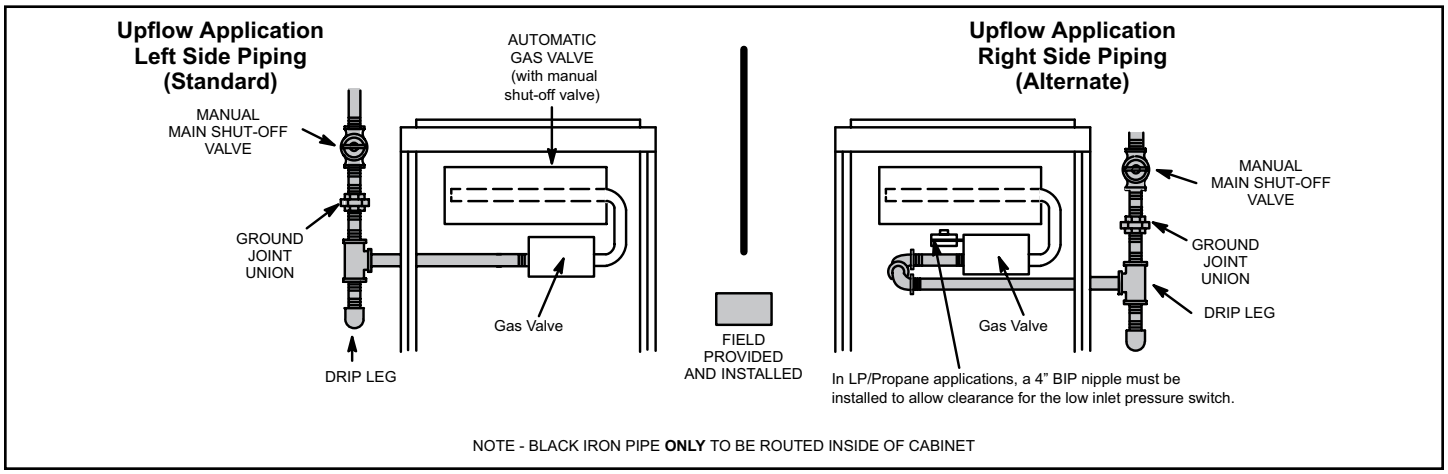

Figure 61. Upflow Applications Possible Gas Piping Configurations

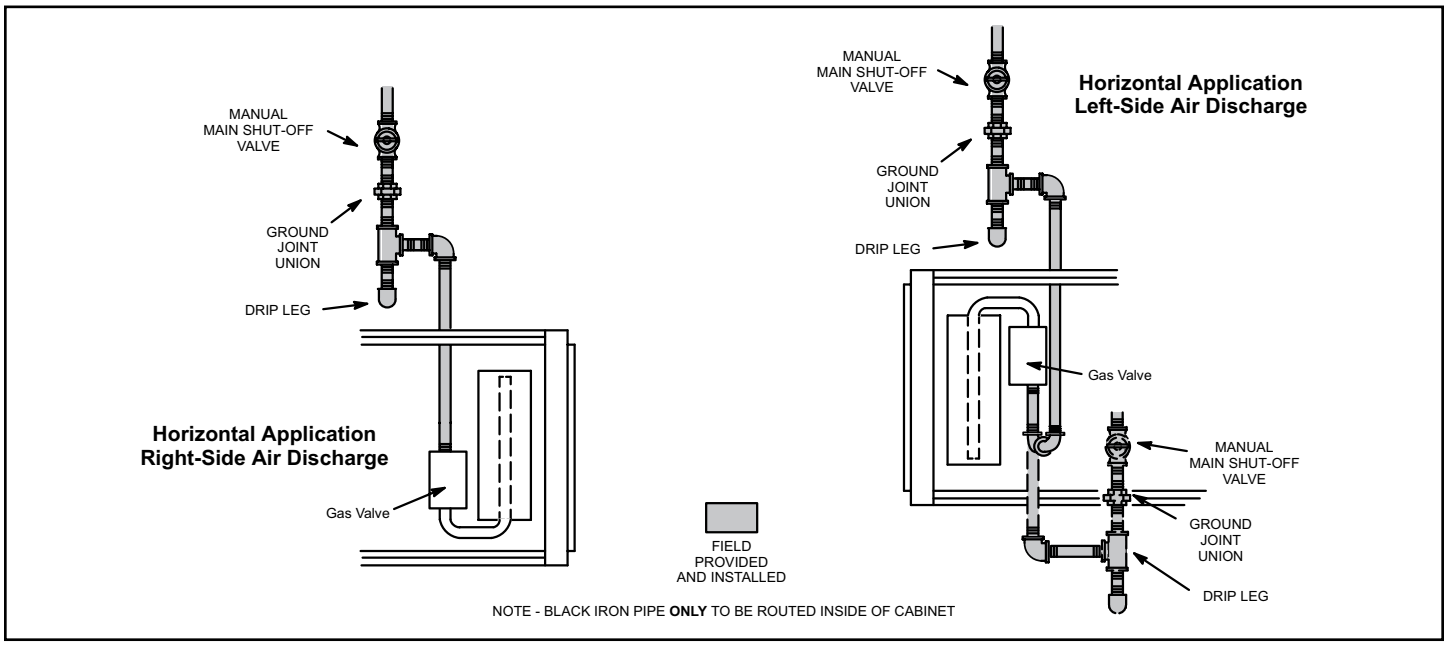

Figure 62. Horizontal Applications Possible Gas Piping Configurations

Gas Pipe Capacity - FT³/HR (kL/HR)

Nominal Iron Pipe Size - inches (mm)	Internal Diameter - inches (mm)	Length of Pipe - feet (m)									
		10 (3.048)	20 (6.096)	30 (9.144)	40 (12.192)	50 (15.240)	60 (18.288)	70 (21.336)	80 (24.384)	90 (27.432)	100 (30.480)
1/2 (12.7)	.622 (17.799)	175 (4.96)	120 (3.40)	97 (2.75)	82 (2.32)	73 (2.07)	66 (1.87)	61 (1.73)	57 (1.61)	53 (1.50)	50 (1.42)
3/4 (19.05)	.824 (20.930)	360 (10.19)	250 (7.08)	200 (5.66)	170 (4.81)	151 (4.28)	138 (3.91)	125 (3.54)	118 (3.34)	110 (3.11)	103 (2.92)
1 (25.4)	1.049 (26.645)	680 (19.25)	465 (13.17)	375 (10.62)	320 (9.06)	285 (8.07)	260 (7.36)	240 (6.80)	220 (6.23)	205 (5.80)	195 (5.52)
1-1/4 (31.75)	1.380 (35.052)	1400 (39.64)	950 (26.90)	770 (21.80)	660 (18.69)	580 (16.42)	530 (15.01)	490 (13.87)	460 (13.03)	430 (12.18)	400 (11.33)
1-1/2 (38.1)	1.610 (40.894)	2100 (59.46)	460 (41.34)	1180 (33.41)	990 (28.03)	900 (25.48)	810 (22.94)	750 (21.24)	690 (19.54)	650 (18.41)	620 (17.56)
2 (50.8)	2.067 (52.502)	3950 (111.85)	2750 (77.87)	2200 (62.30)	1900 (53.80)	1680 (47.57)	1520 (43.04)	1400 (39.64)	1300 (36.81)	1220 (34.55)	1150 (32.56)
2-1/2 (63.5)	2.469 (67.713)	6300 (178.39)	4350 (123.17)	3520 (99.67)	3000 (84.95)	2650 (75.04)	2400 (67.96)	2250 (63.71)	2050 (58.05)	1950 (55.22)	1850 (52.38)
3 (76.2)	3.068 (77.927)	11000 (311.48)	7700 (218.03)	6250 (176.98)	5300 (150.07)	4750 (134.50)	4300 (121.76)	3900 (110.43)	3700 (104.77)	3450 (97.69)	3250 (92.03)
4 (101.6)	4.026 (102.260)	23000 (651.27)	15800 (447.39)	12800 (362.44)	10900 (308.64)	9700 (274.67)	9700 (274.67)	8100 (229.36)	7500 (212.37)	7200 (203.88)	6700 (189.72)

NOTE: *Capacity given in cubic feet of gas per hour (kilo liters of gas per hour) and based on 0.60 specific gravity gas.*

Table 8.

Electrical

ELECTROSTATIC DISCHARGE (ESD)
Precautions and Procedures

⚠ CAUTION

Electrostatic discharge can affect electronic components. Take precautions during furnace installation and service to protect the furnace's electronic controls. Precautions will help to avoid control exposure to electrostatic discharge by putting the furnace, the control and the technician at the same electrostatic potential. Neutralize electrostatic charge by touching hand and all tools on an unpainted unit surface, such as the gas valve or blower deck, before performing any service procedure.

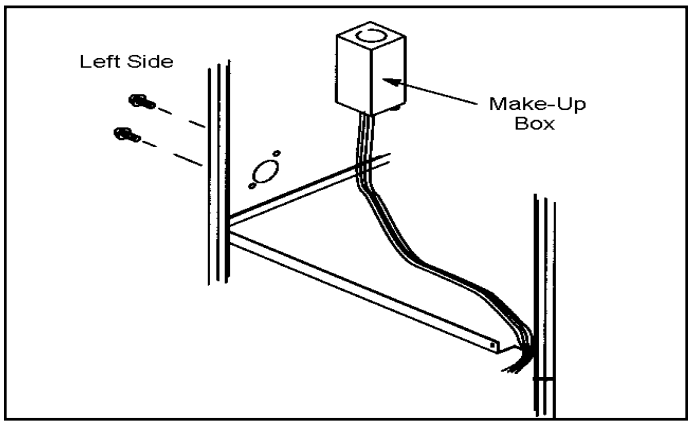

Figure 63. Interior Make-Up Box Installation

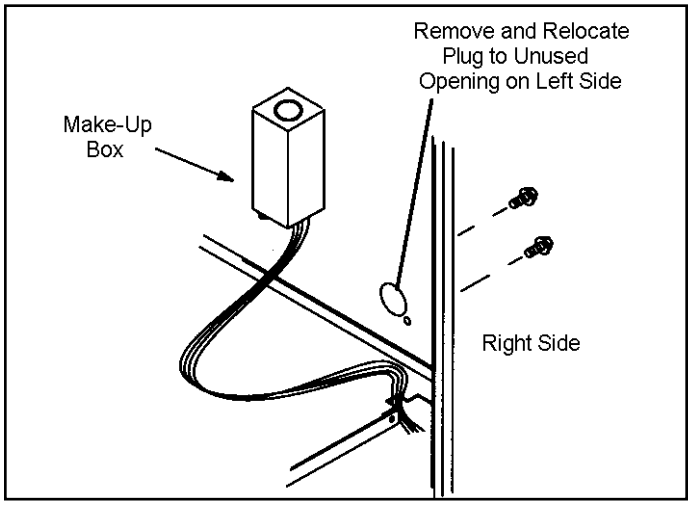

Figure 64. Interior Make-Up Box Installation

The unit is equipped with a field makeup box. The makeup box may be moved to the right side of the furnace to facilitate installation. Seal unused openings on left side with plugs removed from right side. Secure the excess wire to the existing harness to protect it from damage.

Refer to Figure 73 and Figure 75 for field wiring. Refer to Figure 74 and Figure 76 for schematic wiring diagram and troubleshooting.

1. The power supply wiring must meet Class I restrictions. Protected by either a fuse or circuit breaker, select circuit protection and wire size according to unit nameplate.

   NOTE: *Unit nameplate states maximum current draw. Maximum over current protection allowed is shown in Table 10.*

2. Holes are on both sides of the furnace cabinet to facilitate wiring.
3. Install a separate (properly sized) disconnect switch near the furnace so that power can be turned off for servicing.

Capacity	Maximum Over-Current Protection (Amps)
045*B12, 070*B12, 090*C12	15
090*C16, 090*C20, 110*C16, 110*C20, 135*D20	20

Table 9.

4. Before connecting the thermostat, check to make sure the wires will be long enough for servicing at a later date. Make sure that thermostat wire is long enough to facilitate future removal of blower for service.
5. Complete the wiring connections to the equipment. Use the provided unit wiring diagram and the field wiring diagram shown in Figure 73 and Figure 75. Use 18 gauge wire or larger that is suitable for Class II rating for thermostat connections.
6. Electrically ground the unit according to local codes or, in the absence of local codes, according to the current National Electric Code (ANSI/NFPA No. 70). A green ground wire is provided in the field make-up box.

   NOTE: *This furnace contains electronic components that are polarity sensitive. Make sure that the furnace is wired correctly and is properly grounded.*

7. One line voltage "ACC" 1/4" spade terminal is provided on the furnace integrated control. Any electronic air cleaner or other accessory rated up to one amp can be connected to this terminal with the neutral leg of the circuit being connected to one of the provided neutral terminals. This terminal is energized when the indoor blower is operating.
8. One line voltage "HUM" 1/4" spade terminal is provided on the furnace integrated control. Any humidifier rated up to one amp can be connected to this terminal with the neutral leg of the circuit being connected to one of the provided neutral terminals. This terminal is energized in the heating mode whenever the

combustion air inducer is operating.

9. Install the room thermostat according to the instructions provided with the thermostat. If the furnace is being matched with a heat pump, refer to the instruction packaged with the dual fuel thermostat.

Indoor Blower Speeds

1. When the thermostat is set to “FAN ON,” the indoor blower will run continuously at approximately 38% of the second stage cooling speed when there is no cooling or heating demand. See Table 13 for allowable continuous circulation speeds.
2. When this unit is running in the heating mode, the indoor blower will run on the heating speed designated by the positions of DIP switches 1 (A,B,C,D) of the HEAT jumper plug. When the heat demand is satisfied, the indoor blower will continue to run at the low stage heat cfm for the duration of the user-selected heat blower off delay. The user can select one of the four preset heat blower off delays (60/90/120/180 sec) by repositioning the movable shunt on the 5-pin header on the ignition control.

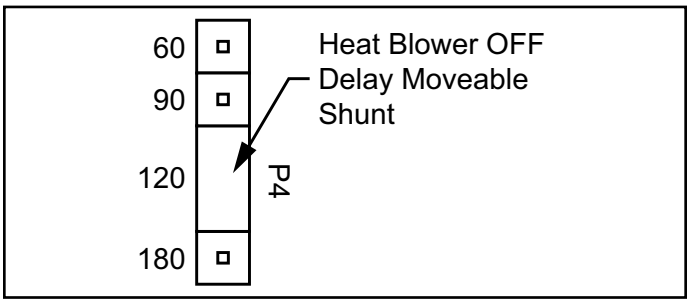

Figure 65. Heat Blower Off Delay Moveable Shunt

3. When there is a cooling demand, the indoor blower will run on the cooling speed designated by the positions of DIP switches (A, B, C, D) of the COOL jumper plug.

Generator Use - Voltage Requirements

The following requirements must be kept in mind when specifying a generator for use with this equipment:

- The furnace requires 120 volts ± 10% (Range: 108 volts to 132 volts).
- The furnace operates at 60 Hz ± 5% (Range: 57 Hz to 63 Hz).
- The furnace integrated control requires both polarity and proper ground. Both polarity and proper grounding should be checked before attempting to operate the furnace on either permanent or temporary power.
- Generator should have a wave form distortion of less than 5% THD (Total Harmonic Distortion).

Electrical Wiring

⚠ WARNING

Risk of electrical shock. Disconnect electrical power at the circuit breaker or service panel before making electrical connections. Failure to disconnect power supplies can result in property damage, personal injury, or death.

The furnace must be grounded and wired in accordance with local codes or, in the absence of local codes, with the National Electrical Code ANSI/NFPA No. 70 (latest edition) and/or CSA C22.1 Electrical Code (latest edition) if an external electrical source is utilized.

In all instances, other than wiring for the thermostat, the wiring to be done and any replacement of wire shall conform with the temperature limitation for Type T wire –63°F (35°C) rise.

Connect a sufficiently sized wire with ground to the furnace’s line voltage connections and ground wire. Refer to the furnace rating plate for electrical characteristics to be used in sizing field supply wiring and overcurrent protection.

The line voltage supply should be routed through a readily accessible disconnect located within sight of the furnace. A junction box on the furnace side panel is provided for line voltage connections. Refer to the furnace wiring diagram for specific connection information.

Proper polarity of the supply connections (“HOT” and “NEUTRAL”) must be observed to ensure that safety controls provide the protection intended.

A connection to the unit’s ground wire and actual earth ground (typically a ground stake or buried steel pipe) must be maintained for proper operation.

Thermostat

Install a room thermostat according to the instructions furnished with it. Select a location on an inside wall that is not subject to drafts, direct sunshine, or other heat sources. The initial heat anticipator setting should be equal to the total current draw of the control circuit. Low voltage thermostat connections are to be made to the integrated ignition/blower control board as indicated on the wiring diagram.

NOTE: *The automatic heat staging option allows a single stage thermostat to be used with two stage furnace models (97G2UHV). To activate this option, move the jumper pin (see Figure 66) to desired setting (5 minutes or 10 minutes). The furnace will start on 1st stage heat and stay at 1st stage heat for the duration of the selected time before switching to 2nd stage heat. W1 on the control board must be connected to W1 on the thermostat.*

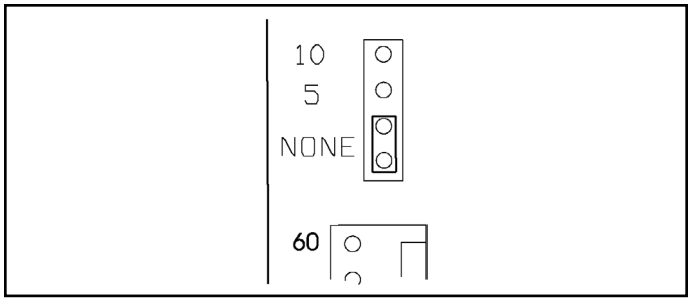

Figure 66. Automatic Heat Staging Jumper

Humidifier

Terminals are provided on the integrated ignition/blower control board for connection to a 120-volt humidifier. The "HUM" terminal is energized whenever the thermostat calls for heat. See the furnace wiring diagram for specific connection information.

Electronic Air Cleaner

Terminals are provided on the integrated ignition/blower control board for connection of a 120-volt electronic air cleaner. The "EAC" terminal is energized whenever the thermostat calls for heat, cooling, or continuous blower. See furnace wiring diagram for specific connection information.

Variable Speed Features

This furnace is equipped with a variable speed circulation air blower motor that will deliver a constant airflow within a wide range of external static pressures. Other features of this variable speed motor include:

Soft Start

The variable speed motor will slowly ramp up to normal operating speed. This minimizes noise and increases comfort by eliminating the initial blasts of air encountered with standard motors.

Soft Stop

At the end of a cooling or heating cycle, the variable speed motor will slowly ramp down after a short blower "off" delay. If continuous blower operation has been selected, the variable speed motor will slowly ramp down until it reaches the airflow for that mode.

Passive and Active Dehumidification

Passive Dehumidification

For situations where humidity control is a problem, a dehumidification feature has been built into the variable speed motor. At the start of each cooling cycle, the variable speed motor will run at 82% of the rated airflow for 7.5 minutes. After 7.5 minutes has elapsed, the motor will increase to 100% of the rated airflow.

Active Dehumidification

To achieve additional dehumidification, clip the jumper wire located below the DEHUM terminal on the integrated ignition/blower control board and connect a humidity control that opens on humidity rise to the DEHUM and R terminals. The DEHUM terminal on the control board must be connected to the normally closed contact of the humidity control so that the board senses an open circuit on high humidity. In this setup, the variable speed motor will operate at a 30% reduction in the normal cooling airflow rate when there is a call for dehumidification.

Both the passive and active dehumidification methods described above can be utilized on the same furnace.

Circulating Airflow Adjustments

Cooling Mode

The units are factory set for the highest airflow for each model. Adjustments can be made to the cooling airflow by repositioning the jumper plug marked COOL – A, B, C, D (see Figure 67). To determine what CFM the motor is delivering at any time, count the number of times the amber LED on the control board flashes. Each flash signifies 100 CFM; count the flashes and multiply by 100 to determine the actual CFM delivered (for example: 10 flashes x 100 = 1000 CFM).

Heating Mode

These units are factory set to run at the middle of the heating rise range as shown on the unit rating plate. If higher or lower rise is desired, reposition the jumper plug marked HEAT - A, B, C, C (see Figure 66). See Table 12 for allowable heating speeds. To determine what CFM the motor is delivering at any time, count the number of times the amber LED on the control board flashes. Each flash signifies 100 CFM; count the flashes and multiply by 100 to determine the actual CFM delivered (for example: 10 flashes x 100= 1000 CFM).

Adjust Tap

Airflow amounts may be increased or decreased by 10% by moving the ADJUST jumper plug (see Figure 67) from the NORM position to the (+) or (-) position. Changes to the ADJUST tap will affect both cooling and heating airflows. The TEST position on the ADJUST tap is not used.

Continuous Blower Operation

The comfort level of the living space can be enhanced when using this feature by allowing continuous circulation of air between calls for cooling or heating. The circulation of air occurs at half the full cooling airflow rate.

To engage the continuous blower operation, place the fan switch on the thermostat into the ON position. A call for fan from the thermostat closes R to G on the ignition control board. The control waits for a 1 second thermostat debounce delay before responding to the call for fan by ramping the circulating blower up to 38% of the cooling speed. When the call for continuous fan is satisfied, the control immediately ramps down the circulating blower.

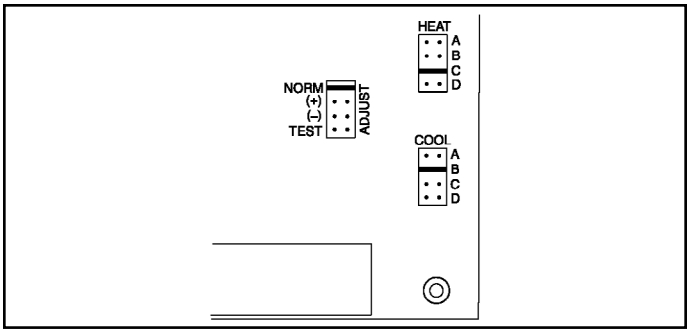

Figure 67. ADJUST, HEAT, and COOL Taps on Integrated Ignition/Blower Control Board

Sequence of Operation

Heating

On a call for heat from the room thermostat, the control board performs a 1 second self check. Upon confirmation that the pressure switch contacts are in an open position, the control energizes the combustion blower on high speed. The control then checks for adequate combustion air by making sure the low-fire pressure switch contacts are closed.

The igniter energizes and is allowed to warm up for 20 seconds before the gas valve energizes on 1st stage and burners ignite. 45 seconds after the control confirms ignition has occurred, the control drops the combustion blower to low speed.

The circulating blower operates at full 1st stage heat speed until either the heat call is satisfied or the thermostat initiates a call for 2nd stage heat. On a call for 2nd stage heat, the control energizes the circulating air blower on full CFM 2nd stage heat.

If the automatic heat staging option is being used the furnace does not switch to 2nd stage heat in response to a call from the thermostat but instead operates at 1st stage heat for the duration of the selected time before automatically switching to 2nd stage heat.

When the call for heat is satisfied, the gas valve and combustion air blower shut down. The control board shuts off the gas valve and runs the combustion blower for an additional 15 seconds. The circulating air blower continues to run for selected blower off delay time (60/90/120/180 sec) before ramping down and shutting off.

In the event the unit loses ignition, the control will attempt to recycle up to five times before it goes into a 1 hour lockout. Lockout may be manually reset by removing power from the control for more than 1 second or removing the thermostat call for heat for more than 3 seconds.

If during a heating cycle the limit control senses an abnormally high temperature and opens, the control board de-energizes the gas valve and the combustion blower while the circulating blower runs at 1st stage heat speed. The circulating blower remains energized until the limits are closed.

Fan On

When the thermostat is set for continuous fan operation and there is no demand for heating or cooling, a call for fan closes the R to G circuit and the circulating blower motor runs at 38% of the selected cooling CFM until switched off. When the call for fan is turned off, the control de-energizes the circulating blower.

Cooling

The unit is set up at the factory for single stage cooling. For two stage cooling operation, clip the jumper wire located between the Y to Y2 terminals on the integrated ignition/ blower control board.

If the active dehumidification feature is enabled, the circulating blower runs at 70% of the selected cooling speed as long as there is a call for dehumidification.

⚠ WARNING

The system must not be in either the passive or active dehumidification mode when charging a cooling system.

Single Stage Cooling

A call for cooling from the thermostat closes the R to Y circuit on the integrated ignition/blower control board. The control waits for a 1-second delay before energizing the circulating blower to 82% of the selected cooling CFM (passive dehumidification mode). After 7.5 minutes, the circulating blower automatically ramps up to 100% of the selected cooling airflow. When the call for cooling is satisfied, the circulating blower ramps down to continuous fan cfm (38% of high stage cooling) for 45 seconds before completely shutting down the blower.

Two Stage Cooling

A call for 1st stage cooling from the thermostat closes the R to Y circuit on the control board. The control waits for a 1-second delay before energizing the circulating blower. The blower motor runs at 57% of the selected air flow for the first 7.5 minutes of the 2nd stage cooling demand (passive dehumidification mode). After 7.5 minutes, the blower motor runs at 70% of the selected cooling air flow until 1st stage cooling demand is satisfied.

A call for 2nd stage cooling from the thermostat closes the R to Y2 circuit on the control board. The blower motor ramps up to 100% of the selected cooling air flow. When the demand for cooling is met, the blower ramps down to Y1 until satisfied, then ramps down to continuous fan cfm (38% of high stage cooling) for 45 seconds before completely shutting down the blower.

Heat Pump

For heat pump operation, clip the jumper wire located below the O terminal on the integrated ignition/blower control board. In heat pump mode, a call for heat will result in the circulating air blower operating at the selected cooling airflow after a brief ramp-up period.

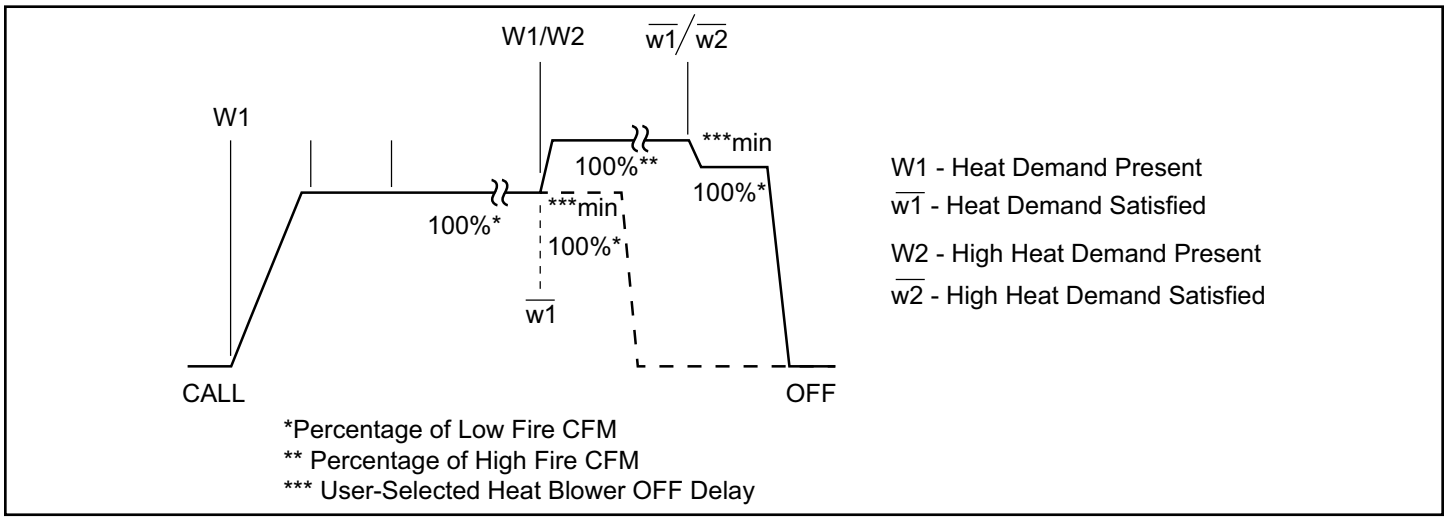

Figure 68. Indoor Blower Operation - 1st Stage-2nd Stage (W1/W2) Heat Call

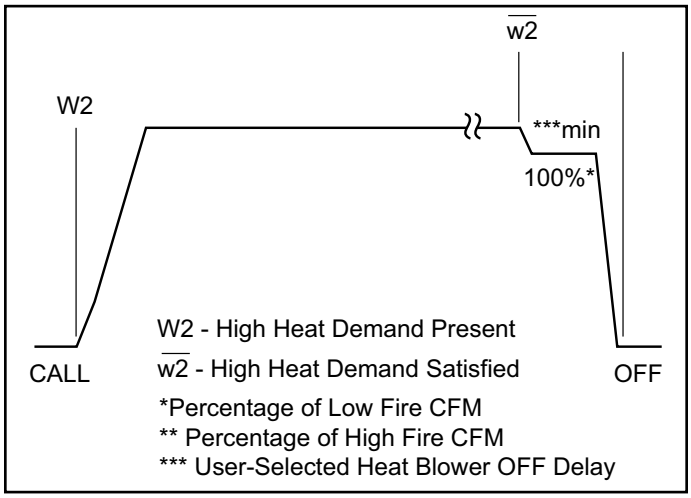

Figure 69. Indoor Blower Operation - High Heat (W2) Call

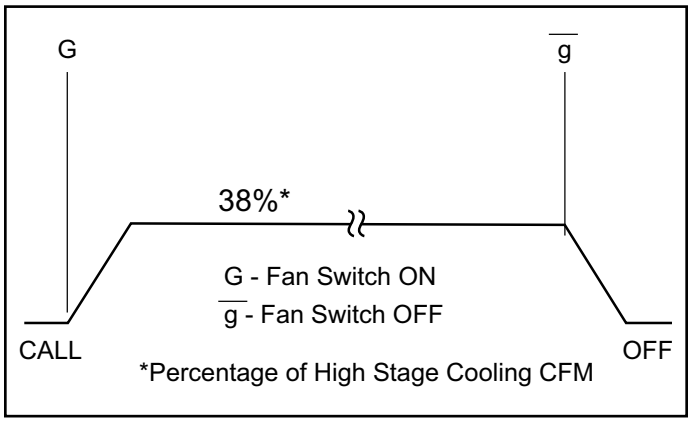

Figure 70. Indoor Blower Operation - Call for Fan

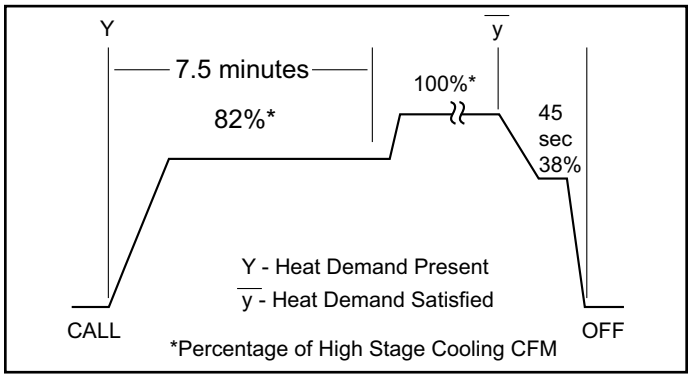

Figure 71. Indoor Blower Operation - Single Stage Cooling

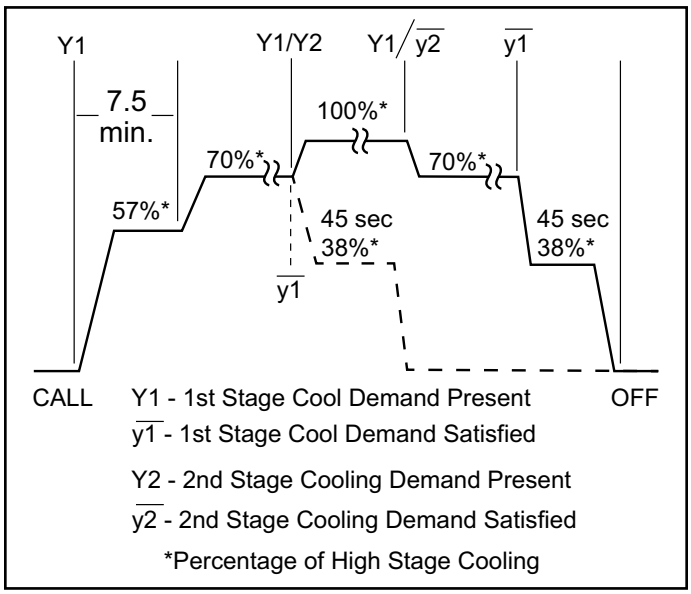

Figure 72. Indoor Blower Operation - Two Stage Cooling

Control Diagnostics

Troubleshooting

Make the following visual checks before troubleshooting:

1. Check to see that the power to the furnace and the integrated ignition/blower control board is ON.
2. The manual shutoff valves in the gas line to the furnace must be open.
3. Make sure all wiring connections are secure.
4. Review the Sequence of Operation.

Start the system by setting thermostat above room temperature. Observe system response. Then use the information provided in this section to check the system operation.

The furnace has a built-in, self-diagnostic capability. If a system problem occurs, a fault code is shown by a red LED on the control board. The control continuously monitors its own operation and the operation of the system. If a failure occurs, the LED will indicate the failure code. The flash codes are presented in Table 10.

Fault Code History Button

The control stores the last five fault codes in memory. A push-button switch is located on the control. When the push-button switch is pressed and released, the control flashes the stored fault codes. The most recent fault code is flashed first; the oldest fault code is flashed last. To clear the fault code history, press and hold the push-button switch in for more than 5 seconds before releasing.

High Heat State LED

On 97G2UHV models, a green LED is provided on the control board to indicate high heat state (see Table 11).

CFM LED

On 97G2UHV models equipped with a variable speed motor, an amber LED is provided on the control board to display CFM. To determine what CFM the motor is delivering at any time, count the number of times the amber LED flashes. Each flash signifies 100 CFM; count the flashes and multiply by 100 to determine the actual CFM delivered (for example: 10 flashes x 100 = 1000 CFM).

LED Status	Fault Description
LED Off	No power to control or control hardware fault detected
LED On	Normal operation
1 Flash	Flame present with gas valve off
2 Flashes	Pressure switch closed with inducer off
3 Flashes	Pressure switch open with inducer energized
4 Flashes	Primary Limit, Secondary Limit, or Roll-Out switch open
5 Flashes	Not used
6 Flashes	Pressure switch cycle lockout
7 Flashes	Lockout due to no ignition
8 Flashes	Lockout due to too many flame dropouts
9 Flashes	Incorrect polarity and phasing

Table 10. Failure Codes - Red LED

LED Status	Description
LED Off	No demand for high heat
LED On	High heat demand, operating normally
LED Flashing	High heat demand, high pressure switch not closed

Table 11. High Heat State - Green LED

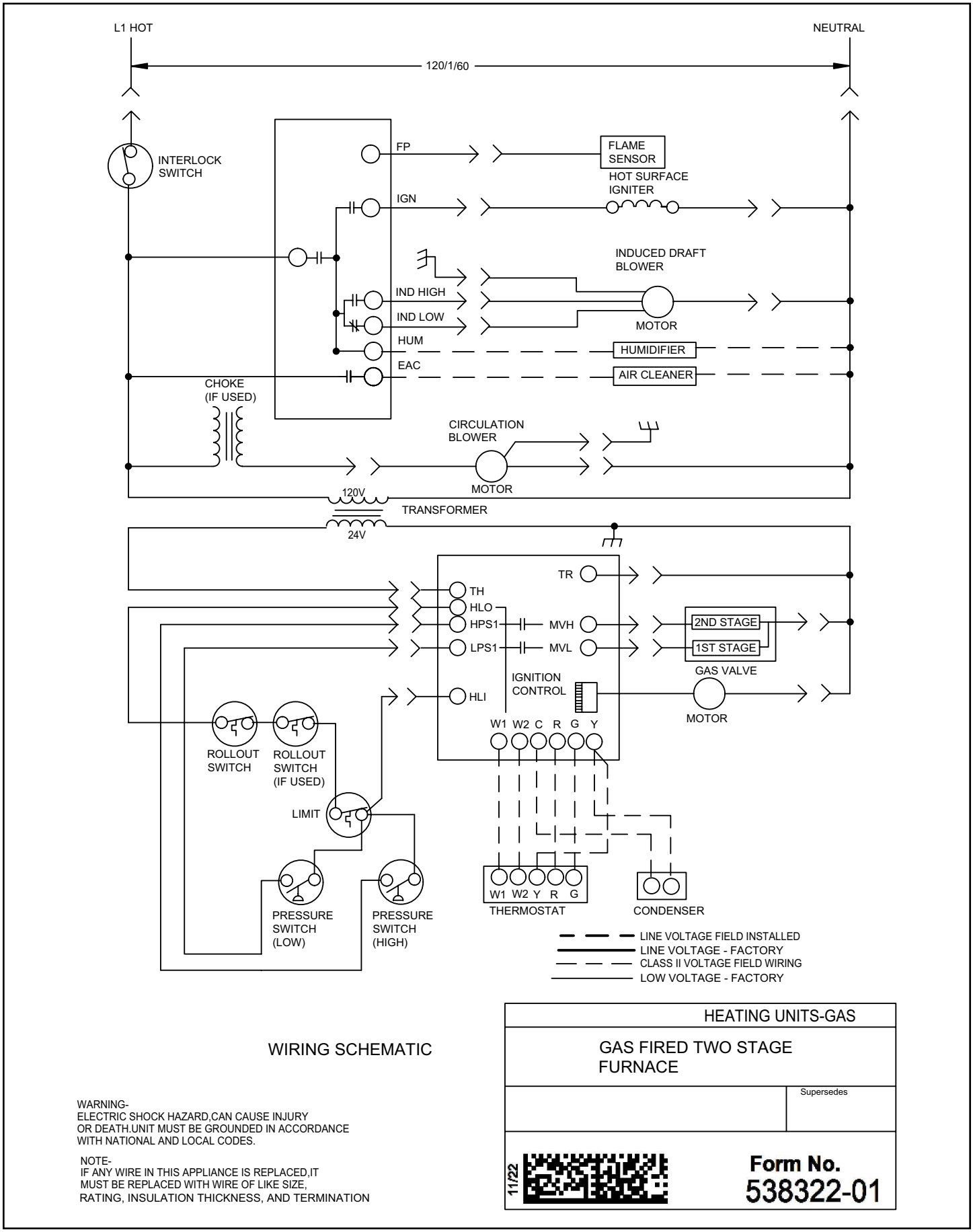

Figure 73. Typical Field Wiring Diagram (045 - 110)

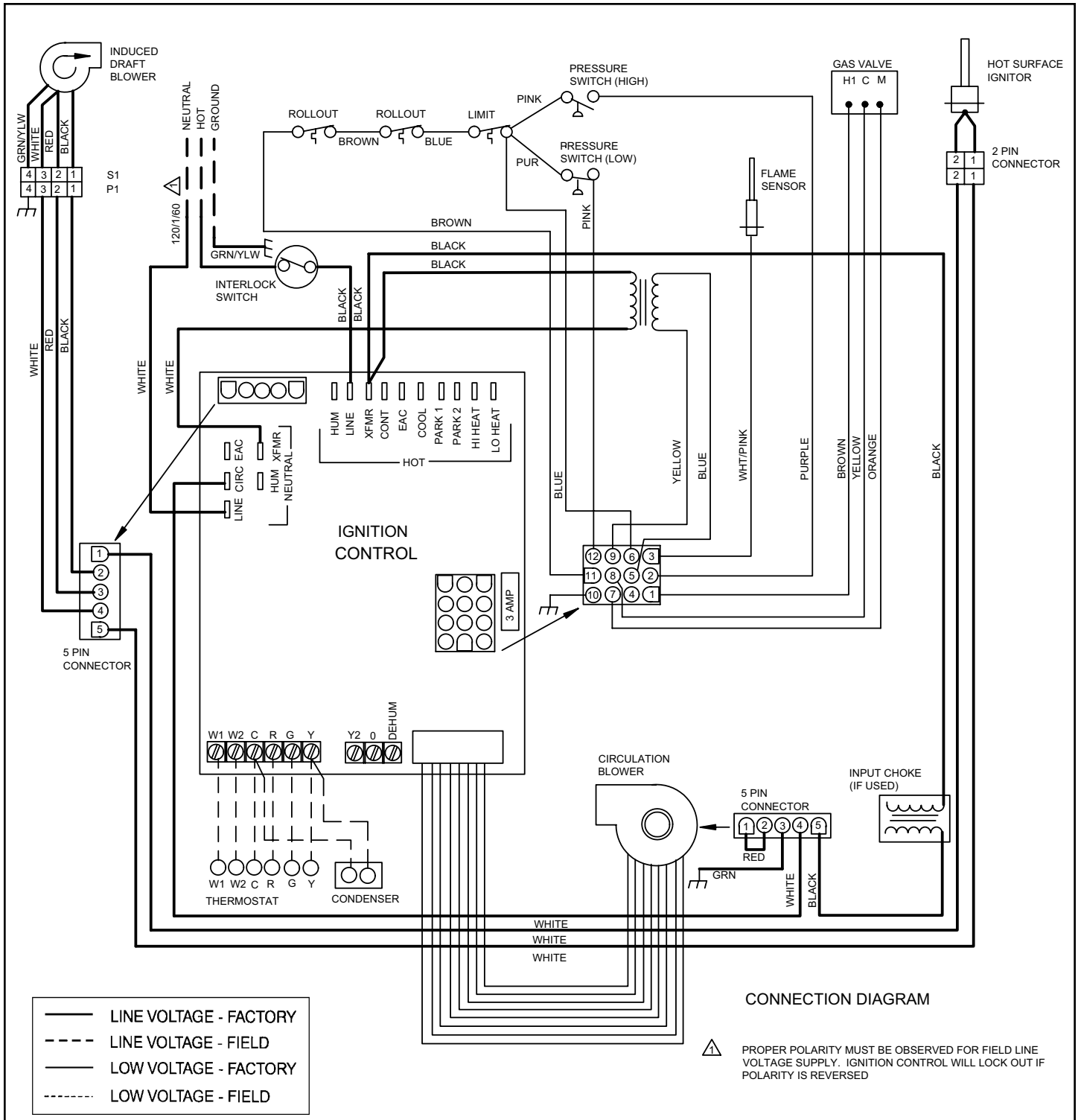

NOTES:

1. PRESS AND RELEASE FAULT CODE HISTORY BUTTON TO DISPLAY FAULT CODES. TO ERASE CODES, PRESS AND HOLD BUTTON IN FOR MORE THAN 5 SECONDS
2. IF ANY OF THE ORIGINAL WIRE AS SUPPLIED WITH THE FURNACE MUST BE REPLACED, IT MUST BE REPLACED WITH WIRING MATERIAL HAVING A TEMP. RATING OF AT LEAST 90°c.
3. DO NOT CONNECT C (COMMON) CONNECTION BETWEEN INDOOR UNIT AND THERMOSTAT EXCEPT WHEN REQUIRED BY THE INDOOR THERMOSTAT. REFER TO THE THERMOSTAT INSTALLATION INSTRUCTIONS.

Figure 74. Typical Wiring Diagram (045-110)

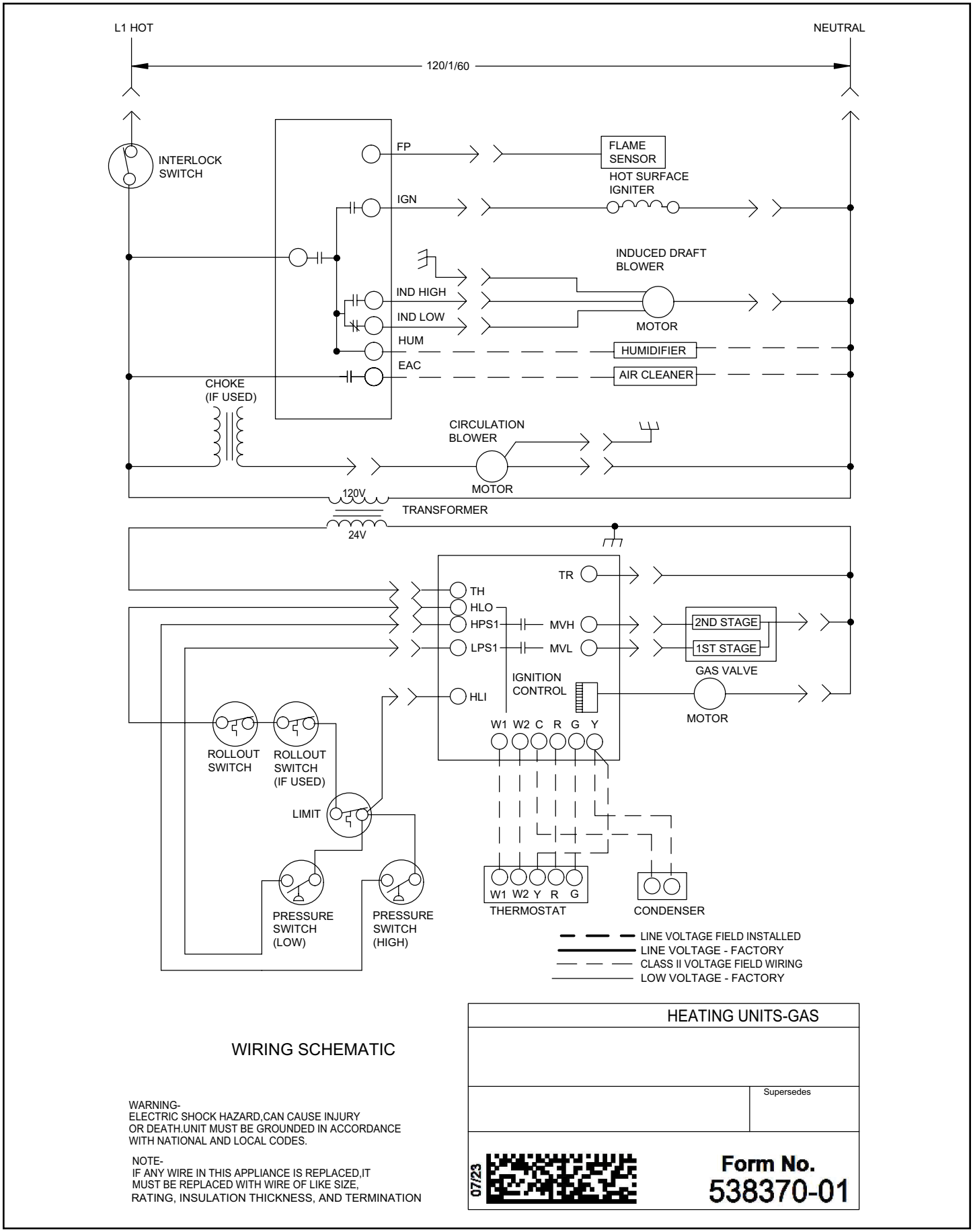

Figure 75. Typical Field Wiring Diagram (135)

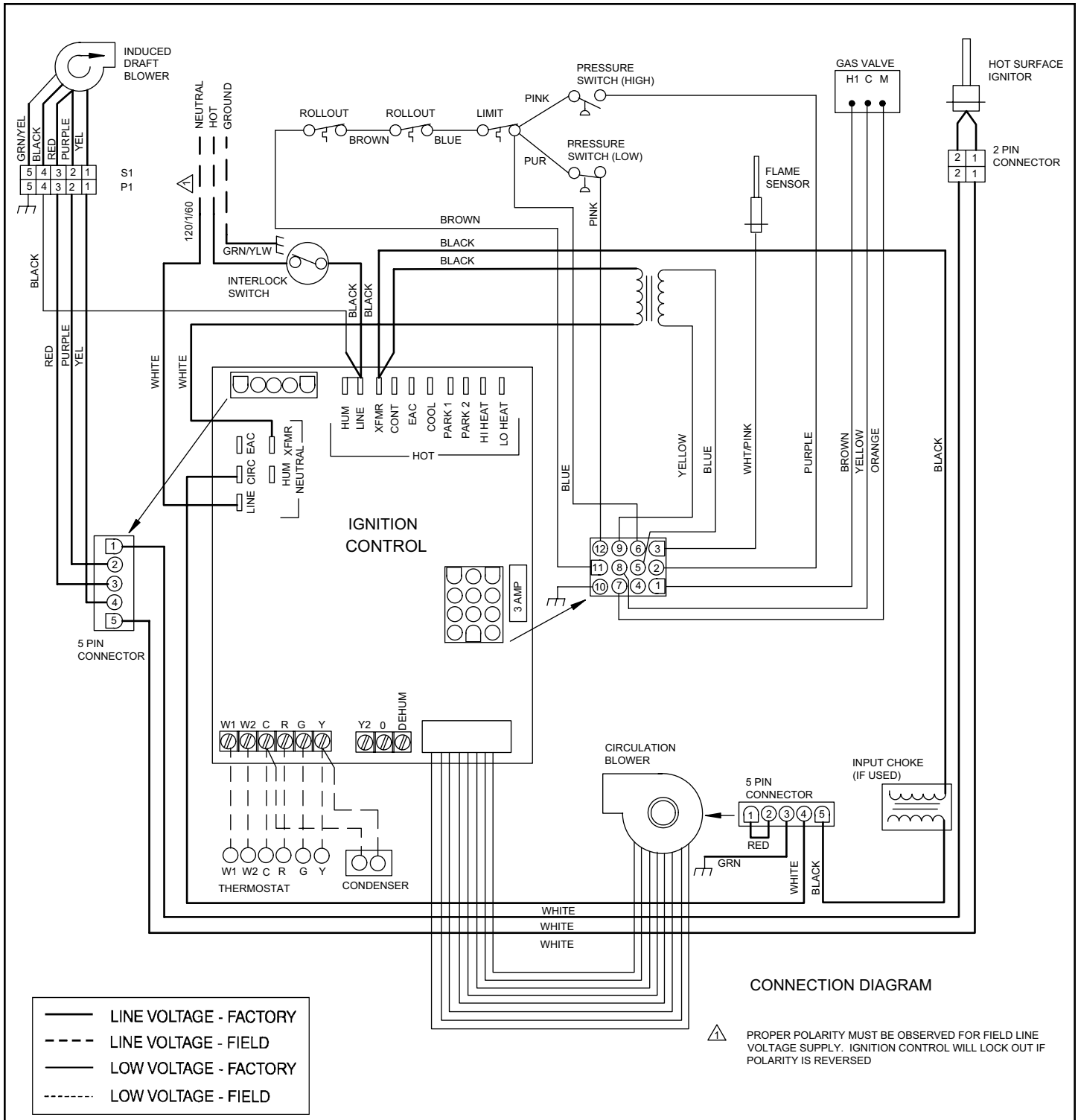

NOTES:

1. PRESS AND RELEASE FAULT CODE HISTORY BUTTON TO DISPLAY FAULT CODES. TO ERASE CODES, PRESS AND HOLD BUTTON IN FOR MORE THAN 5 SECONDS
2. IF ANY OF THE ORIGINAL WIRE AS SUPPLIED WITH THE FURNACE MUST BE REPLACED, IT MUST BE REPLACED WITH WIRING MATERIAL HAVING A TEMP. RATING OF AT LEAST 90°c.
3. DO NOT CONNECT C (COMMON) CONNECTION BETWEEN INDOOR UNIT AND THERMOSTAT EXCEPT WHEN REQUIRED BY THE INDOOR THERMOSTAT. REFER TO THE THERMOSTAT INSTALLATION INSTRUCTIONS.

Figure 76. Typical Wiring Diagram (135)

Blower Performance

97G2UH045BV12

Temp. Rise	Speed Adjustment	Heating CFM @ 0 - 0.8” w.c.			
		Setting D	Setting C	Setting B	Setting A
High Fire 35-65	+	745	875	990	1005
	Normal	685	765	895	910
	-	610	695	785	810
Low Fire 20-50	+	685	765	895	910
	Normal	620	705	800	820
	-	545	625	715	725
Cooling Stage		**Cooling CFM @ 0 - 0.8” w.c.**			
2nd Stage	+	905	1075	1210	1370
	Normal	815	980	1120	1255
	-	720	885	1020	1135
1st Stage	+	595	760	865	980
	Normal	540	660	785	890
	-	485	600	695	790

97G2UH070BV12

Temp. Rise	Speed Adjustment	Heating CFM @ 0 - 0.8” w.c.			
		Setting D	Setting C	Setting B	Setting A
High Fire 50-80	+	965	1130	1255	1400
	Normal	880	990	1140	1295
	-	810	890	1030	1170
Low Fire 25-55	+	940	1070	1195	1345
	Normal	830	965	1100	1235
	-	755	840	975	1130
Cooling Stage		**Cooling CFM @ 0 - 0.8” w.c.**			
2nd Stage	+	860	1060	1215	1365
	Normal	810	960	1130	1265
	-	705	840	1005	1140
1st Stage	+	600	740	840	970
	Normal	555	665	770	855
	-	500	600	680	790

97G2UH090CV12

Temp. Rise	Speed Adjustment	Heating CFM @ 0 - 0.8” w.c.			
		Setting D	Setting C	Setting B	Setting A
High Fire 60-90	+	1060	1135	1240	1430
	Normal	960	1040	1120	1310
	-	830	935	980	1175
Low Fire 35-65	+	960	1040	1120	1310
	Normal	875	945	995	1195
	-	790	840	920	1080
Cooling Stage		**Cooling CFM @ 0 - 0.8” w.c.**			
2nd Stage	+	875	1040	1210	1360
	Normal	800	945	1100	1245
	-	720	840	970	1115
1st Stage	+	625	710	830	950
	Normal	565	670	760	860
	-	520	610	685	785

97G2UH090CV20

Temp. Rise	Speed Adjustment	Heating CFM @ 0 - 0.8” w.c.			
		Setting D	Setting C	Setting B	Setting A
High Fire 40-70	+	1450	1565	1725	1865
	Normal	1310	1450	1585	1690
	-	1155	1305	1450	1545
Low Fire 30-60	+	1120	1265	1420	1520
	Normal	965	1120	1285	1395
	-	865	950	1120	1235
Cooling Stage		**Cooling CFM @ 0 - 0.8” w.c.**			
2nd Stage	+	1385	1595	1820	2020
	Normal	1225	1465	1645	1885
	-	1065	1320	1505	1675
1st Stage	+	935	1055	1275	1465
	Normal	835	980	1120	1335
	-	740	870	1010	1150

97G2UH110CV20

Temp. Rise	Speed Adjustment	Heating CFM @ 0 - 0.8” w.c.			
		Setting D	Setting C	Setting B	Setting A
High Fire 45-75	+	1560	1760	1905	2080
	Normal	1415	1610	1740	1930
	-	1285	1485	1560	1745
Low Fire 35-65	+	1155	1325	1420	1565
	Normal	1055	1200	1310	1480
	-	935	1075	1170	1315
Cooling Stage		**Cooling CFM @ 0 - 0.8” w.c.**			
2nd Stage	+	1310	1560	1745	1955
	Normal	1220	1405	1570	1795
	-	1075	1270	1430	1635
1st Stage	+	935	1065	1245	1405
	Normal	865	970	1145	1280
	-	790	890	1025	1165

97G2UH135DV20

Temp. Rise	Speed Adjustment	Heating CFM @ 0 - 0.8” w.c.			
		Setting D	Setting C	Setting B	Setting A
High Fire 55-85	+	1650	1845	2000	2195
	Normal	1495	1660	1880	1985
	-	1360	1500	1670	1850
Low Fire 40-70	+	1300	1435	1630	1715
	Normal	1190	1325	1465	1620
	-	1095	1190	1340	1430
Cooling Stage		**Cooling CFM @ 0 - 0.8” w.c.**			
2nd Stage	+	1395	1640	1840	2055
	Normal	1290	1480	1660	1905
	-	1170	1330	1500	1705
1st Stage	+	1015	1160	1330	1480
	Normal	940	1085	1200	1345
	-	870	965	1110	1225

Allowable Heating Speeds					
Model Number	**Speed Adjust**	**Setting "D"**	**Setting "C"**	**Setting "B"**	**Setting "A"**
97G2UH045BV12	+10%	Allowed	Allowed	Allowed	Allowed
	Norm	Allowed	Allowed	Factory Setting	Allowed
	-10%	Allowed	Allowed	Allowed	Allowed
97G2UH070BV12	+10%	Allowed	Allowed	Allowed	Not Allowed
	Norm	Allowed	Allowed	Factory Setting	Not Allowed
	-10%	Allowed	Allowed	Allowed	Not Allowed
97G2UH090CV12	+10%	Allowed	Allowed	Allowed	Allowed
	Norm	Allowed	Allowed	Factory Setting	Allowed
	-10%	Allowed	Allowed	Allowed	Allowed
97G2UH090CV20	+10%	Allowed	Allowed	Allowed	Allowed
	Norm	Allowed	Allowed	Factory Setting	Allowed
	-10%	Allowed	Allowed	Allowed	Allowed
97G2UH110CV20	+10%	Allowed	Allowed	Allowed	Allowed
	Norm	Allowed	Allowed	Factory Setting	Allowed
	-10%	Allowed	Allowed	Allowed	Allowed
97G2UH135DV20	+10%	Allowed	Allowed	Allowed	Allowed
	Norm	Allowed	Allowed	Factory Setting	Allowed
	-10%	Allowed	Allowed	Allowed	Allowed

Table 12.

Allowable Circulation Speeds	
Model Number	38% of Second Stage Cooling
All Models	Factory Setting

Table 13.

Unit Start-Up

FOR YOUR SAFETY READ BEFORE OPERATING

⚠ WARNING

Do not use this furnace if any part has been underwater. A flood-damaged furnace is extremely dangerous. Attempts to use the furnace can result in fire or explosion. Immediately call a qualified service technician to inspect the furnace and to replace all gas controls, control system parts, and electrical parts that have been wet or to replace the furnace, if deemed necessary.

⚠ WARNING

Danger of explosion. Can cause injury or product or property damage. Should the gas supply fail to shut off or if overheating occurs, shut off the gas valve to the furnace before shutting off the electrical blower deck, before performing any service procedure.

⚠ CAUTION

Before attempting to perform any service or maintenance, turn the electrical power to unit OFF at disconnect switch.

BEFORE LIGHTING the unit, smell all around the furnace area for gas. Be sure to smell next to the floor because some gas is heavier than air and will settle on the floor.

The gas valve on the unit is equipped with a gas control switch (lever). Use only your hand to move switch. Never use tools. If the switch will not move by hand, do not try to repair it. Force or attempted repair may result in a fire or explosion.

Placing the Furnace into Operation

This furnace is equipped with an automatic hot surface ignition system. Do not attempt to manually light burners on this furnace. Each time the thermostat calls for heat, the burners will automatically light. The ignitor does not get hot when there is no call for heat on these units.

Gas Valve Operation

1. **STOP!** Read the safety information at the beginning of this section.

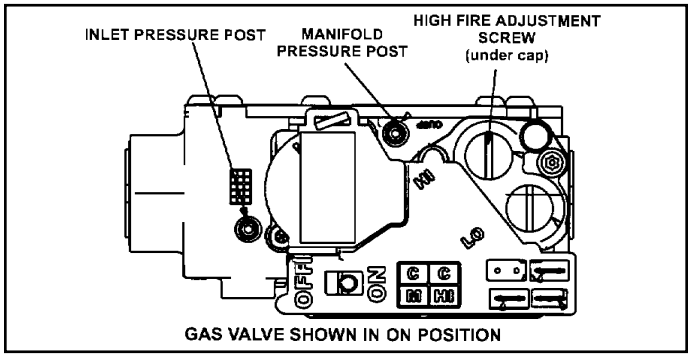

Figure 77.

2. Set the thermostat to the lowest setting.
3. Turn OFF all electrical power to the unit.
4. This furnace is equipped with an ignition device which automatically lights the burners. Do not try to light the burners by hand.
5. Remove the upper access panel.
6. Move gas valve switch to OFF. See Figure 77.
7. Wait five minutes to clear out any gas. If you then smell gas, STOP! Immediately call your gas supplier from a neighbor's phone. Follow the gas supplier's instructions. If you do not smell gas go to next step.
8. Move gas valve switch to ON. See Figure 77.
9. Replace the upper access panel.
10. Turn on all electrical power to the unit.
11. Set the thermostat to desired setting.

    NOTE: *When unit is initially started, steps 1 through 11 may need to be repeated to purge air from gas line.*

12. If the appliance will not operate, follow the instructions "Turning Off Gas to Unit" and call your service technician or gas supplier.

Capacity	Gas	Manifold Pressure in w.g.										Supply Line Pressure in w.g. 0 - 10000 ft.	
		0 - 4500 ft.		4501 - 5500 ft.		5501 - 6500ft.		6501 - 7500ft.		7501-10000ft.			
		Low Fire	High Fire	Low Fire	High Fire	Low Fire	High Fire	Low Fire	High Fire	Low Fire	High Fire	Min.	Max.
All	Natural	1.7	3.5	1.6	3.3	1.5	3.2	1.5	3.1	1.7	3.5	4.5	13.0
	Lp/ Propane	4.5	10.0	4.2	9.4	4.0	9.1	3.9	8.9	4.5	10.0	11.0	13.0

Table 14. Manifold and Supply Line Pressure 0 - 10,000 ft.

Turning Off Gas to Unit

1. Set the thermostat to the lowest setting.
2. Turn off all electrical power to the unit if service is to be performed.
3. Remove the upper access panel.
4. Move gas valve switch to OFF.
5. Replace the upper access panel.

Failure to Operate

If the unit fails to operate, check the following:

1. Is the thermostat calling for heat?
2. Are access panels securely in place?
3. Is the main disconnect switch closed?
4. Is there a blown fuse or tripped breaker?
5. Is the filter dirty or plugged? Dirty or plugged filters will cause the limit control to shut the unit off.
6. Is gas turned on at the meter?
7. Is the manual main shut–off valve open?
8. Is the internal manual shut–off valve open?
9. Is the unit ignition system in lockout? If the unit locks out again, inspect the unit for blockages.

Heating Sequence of Operation

1. When thermostat calls for heat, combustion air inducer starts.
2. Combustion air pressure switch proves blower operation. Switch is factory set and requires no adjustment.
3. After a 15 second pre-purge, the hot surface ignitor energizes.
4. After a 20 second ignitor warm-up period, the gas valve solenoid opens.
5. Gas is ignited, flame sensor proves the flame, and the combustion process continues.
6. If flame is not detected after first ignition trial, the ignition control will repeat steps 3 and 4 four more times before locking out the gas valve. The ignition control will then automatically repeat steps 1 through 6 after 60 minutes. To interrupt the 60 minute period, move thermostat from “Heat” to “OFF” then back to “Heat”. Heating sequence then restarts at step 1.

Gas Pressure Adjustment

Gas Flow (Approximate)

Capacity	Seconds for One Revolution			
	Natural		LP	
	1 cu ft Dial	2 cu ft Dial	1 cu ft Dial	2 cu ft Dial
-045	80	160	200	400
-70	55	110	136	272
-90	41	82	102	204
-110	33	66	82	164
-135	27	54	68	136
	Natural - 1000 btu/cu ft		LP - 2500 btu/cu ft	

Table 15. Gas Meter Clocking Chart

Furnace should operate at least 5 minutes before checking gas flow. Determine time in seconds for two revolutions of gas through the meter. (Two revolutions assures a more accurate time.) Divide by two and compare to time in Table 15. If manifold pressure matches Table 14 and rate is incorrect, check gas orifices for proper size and restriction. Remove temporary gas meter if installed.

NOTE: *To obtain accurate reading, shut off all other gas appliances connected to meter.*

Supply Pressure Measurement

An inlet pressure post on the inlet side of the gas valve provides access to the supply pressure. See Figure 77. Back out the 3/32 Hex screw one turn, connect a piece of 5/16” tubing and connect to a manometer to measure supply pressure.

NOTE: *Shut unit off and remove manometer as soon as an accurate reading has been obtained. Take care to re-tighten the 3/32 Hex screw.*

Capacity	Natural to LP/ Propane	High Altitude Natural Burner Orifice Kit	High Altitude LP/ Propane Burner Orifice Kit	High Altitude Pressure Switch	
	0 - 7500 ft (0 - 2286m)	7501 - 10000 ft (2286 - 3048m)	7501 - 10000 ft (2286 - 3048m)	4501 - 7500 ft (1371 - 2286m)	7501 - 10000 ft (2286 - 3048m)
045	11K48	*51W01	11K47	14A51	14A53
070				14A48	14A54
090				14A54	14A53
110				25B93	14A45
135				25B94	25B95

*Conversion requires installation of a gas valve manifold spring which is provided with the gas conversion kit.

Pressure switch is factory set. No adjustment necessary. All models use the factory-installed pressure switch from 0-4500 feet (0-1371 m).

Table 16. Conversion Kit Fan Pressure Switch Requirements at Varying Altitudes

For proper furnace operation the minimum gas supply pressure is 4.5” w.c and the maximum gas supply pressure is 10.5” w.c for natural gas. The minimum gas supply pressure is 10” w.c. and the maximum gas supply pressure is 13” w.c. for LP/propane gas.

Manifold Pressure Measurement

1. A manifold pressure post located on the gas valve provides access to the manifold pressure. See Figure 77. Back out the 3/32 Hex screw one turn, connect a piece of 5/16” tubing and connect to a manometer to measure supply pressure.
2. Start unit and allow 5 minutes for unit to reach steady state.
3. While waiting for the unit to stabilize, observe the flame. Flame should be stable and should not lift from burner. Natural gas should burn blue.
4. After allowing unit to stabilize for 5 minutes, record manifold pressure and compare to value given in Table 14.

NOTE: *Shut unit off and remove manometer as soon as an accurate reading has been obtained. Take care to re-tighten the 3/32 Hex screw.*

Proper Combustion

Furnace should operate minimum 15 minutes with correct manifold pressure and gas flow rate before checking combustion. Take combustion sample beyond the flue outlet and compare to the tables below. The maximum carbon monoxide reading should not exceed 100 ppm.

High Altitude Information

NOTE: *In Canada, certification for installations at elevations over 4500 feet (1371 m) is the jurisdiction of local authorities.*

Units may be installed at altitudes up to 4,500 ft. above sea level without manifold adjustment. Units installed at altitude of 4,501 - 10,000 feet (1371 to 3048 m) may require a pressure switch change, which can be ordered separately. Table 16 lists conversion kit and pressure switch requirements at varying altitudes.

The combustion air pressure switch is factory-set and requires no adjustment.

Other Unit Adjustments

Primary Limit

The primary limit is located on the heating compartment vestibule panel. This limit is factory set and requires no adjustment.

Flame Rollout Switches (Two)

These manually reset switches are located on the front of the burner box.

Pressure Switches

The pressure switches are located in the heating compartment on the cold end header box. These switches check for proper combustion air inducer operation before allowing ignition trial. The switches are factory set and must not be adjusted.

Temperature Rise

After the furnace has been started and supply and return air temperatures have been allowed to stabilize, check the temperature rise. If necessary, adjust the blower speed to maintain the temperature rise within the range shown on the unit nameplate. See Table 12 for allowable heating speeds. Increase the blower speed to decrease the temperature. Decrease the blower speed to increase the temperature rise. Failure to adjust the temperature rise may cause erratic limit operation.

Fan Control

The fan ON time of 30 seconds is not adjustable. The fan OFF delay (amount of time that the blower operates after the heat demand has been satisfied) is 120 seconds and is not adjustable.

Thermostat Heat Anticipation

Set the heat anticipator setting (if adjustable) according to the amp draw listed on the wiring diagram that is attached to the unit.

Electrical

1. Check all wiring for loose connections.
2. Check for the correct voltage at the furnace (furnace operating).
3. Check amp–draw on the blower motor.

   Motor Nameplate_____Actual_____

Electronic Ignition

The integrated control has an added feature of an internal Watchguard control. The feature serves as an automatic reset device for integrated control lockout caused by ignition failure. This type of lockout is usually due to low gas line pressure. After one hour of continuous thermostat demand for heat, the Watchguard will break and remake thermostat demand to the furnace and automatically reset the integrated control to begin the ignition sequence.

Exhaust and Air Intake Pipe

1. Check exhaust and air intake connections for tightness and to make sure there is no blockage.
2. Is pressure switch closed? Obstructed exhaust pipe will cause unit to shut off at pressure switch. Check termination for blockages.
3. Obstructed pipe or termination may cause rollout switches to open. Reset manual flame rollout switches on burner box assembly if necessary.

Service

⚠ WARNING

ELECTRICAL SHOCK, FIRE, OR EXPLOSION HAZARD.

Failure to follow safety warnings exactly could result in dangerous operation, serious injury, death or property damage.

Improper servicing could result in dangerous operation, serious injury, death, or property damage.

Before servicing, disconnect all electrical power to furnace.

When servicing controls, label all wires prior to disconnecting. Take care to reconnect wires correctly. Verify proper operation after servicing.

At the beginning of each heating season, system should be checked as follows by a qualified service technician:

Blower

Check the blower wheel for debris and clean if necessary. The blower motors are pre-lubricated for extended bearing life. No further lubrication is needed.

⚠ WARNING

The blower access panel must be securely in place when the blower and burners are operating. Gas fumes, which could contain carbon monoxide, can be drawn into living space resulting in personal injury or death.

Filters

All air filters are installed external to the unit. Filters should be inspected monthly. Clean or replace the filters when necessary to ensure proper furnace operation. Table 1 lists recommended filter sizes. A filter must be in place whenever the unit is operating.

Exhaust and Air Intake Pipes

Check the exhaust and air intake pipes and all connections for tightness and to make sure there is no blockage.

NOTE: *After any heavy snow, ice or frozen fog event the furnace vent pipes may become restricted. Always check the vent system and remove any snow or ice that may be obstructing the plastic intake or exhaust pipes.*

Electrical

1. Check all wiring for loose connections.
2. Check for the correct voltage at the furnace (furnace operating).
3. Check amp-draw on the blower motor.

   Motor Nameplate_____Actual_____

Winterizing and Condensate Trap Care

1. Turn off power to the furnace.
2. Have a shallow pan ready to empty condensate water.
3. Remove the clean out cap from the condensate trap and empty water. Inspect the trap then reinstall the clean out cap.

Cleaning Heat Exchanger

If cleaning the heat exchanger becomes necessary, follow the below procedures and refer to Figure 1 when disassembling unit. Use papers or protective covering in front of furnace while removing heat exchanger assembly.

1. Turn off electrical and gas supplies to the furnace.
2. Remove the burner access panel.
3. Mark all gas valve wires and disconnect them from valve.
4. Remove gas supply line connected to gas valve.
5. Remove sensor wire from flame sensor. Disconnect 2–pin plug from the ignitor.
6. Disconnect wires from flame rollout switches.
7. Remove four burner assembly screws at the vestibule panel and remove gas valve /manifold and burner box as a single unit.
8. If necessary, clean burners at this time. Follow procedures outlined in Burner Cleaning section.
9. Remove the clean-out cap on trap and drain. Replace cap.
10. Disconnect condensate drain line from the condensate trap. Remove condensate trap (it may be necessary to cut drain pipe). Remove the 1/2” NPT fitting from the cold end header box. Disconnect drain tubes from cold end header collector box.
11. Disconnect condensate drain tubes from flue collar. Remove screws that secures flue collar in place. Remove flue collar. It may be necessary to cut the exiting exhaust pipe for removal of the fitting.
12. Loosen two clamps from flexible no-hub exhaust collar.
13. Disconnect the 2–pin plug from the combustion air inducer. Remove screws which secure combustion air inducer to collector box. Remove combustion air inducer assembly. Remove ground wire.
14. Mark and disconnect all combustion air pressure tubing from cold end header collector box.
15. Mark and remove wires from pressure switch. Remove pressure switch. Keep tubing attached to pressure switch.
16. Remove electrical junction box from the side of the furnace.
17. Remove blower access panel.

18. Mark and disconnect any remaining wiring to heating compartment components. Disengage strain relief bushing and pull wiring and bushing through the hole in the blower deck.
19. Remove the primary limit from the vestibule panel.
20. Remove top cap screws to allow top cap to be tilted upward to allow clearance for removing heat exchanger.
21. Remove two screws from the front cabinet flange at the blower deck. Spread cabinet sides slightly to allow clearance for removal of heat exchanger.
22. Remove screws along vestibule sides and bottom which secure vestibule panel and heat exchanger assembly to cabinet. Remove two screws from blower rails which secure bottom heat exchanger flange. Remove heat exchanger from furnace cabinet.
23. Back wash heat exchanger with soapy water solution or steam. If steam is used it must be below 275°F (135°C).
24. Thoroughly rinse and drain the heat exchanger. Soap solutions can be corrosive. Take care to rinse entire assembly.
25. Reinstall heat exchanger into cabinet making sure that the rear baffle of the heat exchanger assembly is nested under the support located at the rear of the cabinet. Remove the indoor blower to view this area through the blower opening.
26. Re–secure the supporting screws along the vestibule sides.
27. Reinstall blower assembly and reinstall two screws through rails.
28. Reinstall cabinet screws on front flange at blower deck.
29. Reinstall screws securing top cap.
30. Reinstall the primary limit on the vestibule panel.
31. Route heating component wiring through hole in blower deck and reinsert strain relief bushing.
32. Reinstall pressure switch and reconnect pressure switch wiring.
33. Carefully connect combustion air pressure switch hosing from pressure switch to proper stubs on cold end header collector box.
34. Reinstall 1/2” NPT (if removed) in the cold end header box. Reconnect drain tubing to collector box.
35. Reinstall condensate trap pipe. Reconnect condensate drain line to the condensate trap.
36. Reinstall electrical junction box.
37. Reinstall the combustion air inducer and flexible no hub connector. Reconnect the 2 pin plug to the wire harness.
38. Reconnect drain tubes between flue collar and cold end header box.
39. Secure burner assembly to vestibule panel using four existing screws. Burners are self aligning to center of clam shells.
40. Reconnect gas supply line to gas valve.
41. Reconnect flame rollout switch wires.
42. Reconnect sensor wire and reconnect 2 pin plug from ignitor.
43. Reconnect wires to gas valve.
44. Replace the blower compartment access panel.
45. Refer to instruction on verifying gas and electrical connections when reestablishing supplies.
46. Follow lighting instructions to light and operate furnace for 5 minutes to ensure that heat exchanger is clean and dry and that furnace is operating properly.
47. Replace heating compartment access panel.

Cleaning the Burner Assembly

1. Turn off gas and electrical power to the furnace. Remove heating compartment access panel.
2. Disconnect the gas supply line from the gas valve.
3. Disconnect and label wires from gas valve.
4. Disconnect ignitor wiring at 2 circuit plug.
5. Disconnect and label wires from rollout switch.
6. Disconnect and label flame sensor wire.
7. Disconnect and label ground wire from burner/manifold assembly.
8. Remove four screws that secures burner/manifold assembly to vestibule. Remove the assembly and make note not to allow ignitor plate to dislodge from the assembly.
9. Gently clean the face of the burners using the soft brush attachment on a vacuum cleaner. Visually inspect the inside of the burners and crossovers for any blockage caused by foreign matter. Remove any blockage
10. Reinstall the burner/manifold assembly using the existing four screws. Burners are self aligning to center of clam shells.
11. Reconnect ground wire.
12. Reconnect flame sensor wire.
13. Reconnect rollout switch wires.
14. Reconnect ignitor wires.
15. Reconnect gas valve wires.
16. Reconnect gas supply line to gas valve.
17. Refer to instructions on verifying gas and electrical connections when re-establishing supplies.
18. Follow instructions to place furnace in operation. Run furnace 5 minutes to ensure burners are clean and operating correctly.
19. Replace heating compartment access panel.

Planned Service

A service technician should check the following items during an annual inspection. Power to the unit must be shut off for safety.

Fresh air grilles and louvers (on the unit and in the room where the furnace is installed) - Must be open and unobstructed to provide combustion air.

Burners - Must be inspected for rust, dirt, or signs of water.

Vent pipe - Must be inspected for signs of water, cracked, damaged or sagging pipe, or disconnected joints.

Unit appearance - Must be inspected for rust, dirt, signs of water, burnt or damaged wires, or components.

Blower access door - Must be properly in place and provide a seal between the return air and the room where the furnace is installed.

Return air duct - Must be properly attached and provide an air seal to the unit.

Operating performance - Unit must be observed during operation to monitor proper performance of the unit and the vent system.

Combustion gases - Flue products should be analyzed and compared to the unit specifications.

Problems detected during the inspection may make it necessary to temporarily shut down the furnace until the items can be repaired or replaced.

Instruct the homeowners to pay attention to their furnace. Situations can arise between annual furnace inspections that may result in unsafe operation. For instance, items innocently stored next to the furnace may obstruct the combustion air supply. This could cause incomplete combustion and the production of carbon monoxide gas.

Repair Parts List

The following repair parts are available through Allied Air dealers. When ordering parts, include the complete furnace model number listed on the CSA nameplate. All service must be performed by a licensed professional installer (or equivalent), service agency, or gas supplier.

Cabinet Parts

- Upper Access Panel
- Blower Access Panel
- Top Cap

Control Panel Parts

- Transformer
- Integrated Control Board
- Door Interlock Switch

Blower Parts

- Blower Wheel
- Motor
- Motor Mounting Frame
- Motor Choke
- Blower Housing Cutoff Plate

Heating Parts

- Flame Sensor
- Heat Exchanger Assembly
- Gas Manifold
- Combustion Air Inducer
- Gas Valve
- Main Burner Cluster
- Main Burner Orifices
- Pressure Switches
- Ignitor
- Primary Limit Control
- Flame Rollout Switches

Requirements for Commonwealth of Massachusetts

Modifications to NFPA-54, Chapter 10

Revise NFPA-54 section 10.8.3 to add the following requirements:
For all side wall, horizontally vented, gas-fueled equipment installed in every dwelling, building or structure used in whole or in part for residential purposes, including those owned or operated by the Commonwealth and where the side wall exhaust vent termination is less than seven (7) feet above the finished grade in the area of the venting, including but not limited to decks and porches, the following requirements shall be satisfied:

1. **INSTALLATION OF CARBON MONOXIDE DETECTORS**. At the time of installation of the side wall, horizontally vented, gas-fueled equipment, the installing plumber or gas fitter shall observe that a hard-wired carbon monoxide detector with an alarm and battery backup is installed on the floor level where the gas equipment is to be installed. In addition, the installing plumber or gas fitter shall observe that a battery-operated or hard-wired carbon monoxide detector with an alarm is installed on each additional level of the dwelling, building or structure served by the side wall, horizontally vented, gas-fueled equipment. It shall be the responsibility of the property owner to secure the services of qualified licensed professionals for the installation of hard-wired carbon monoxide detectors.
   a. In the event that the side wall, horizontally vented, gas-fueled equipment is installed in a crawl space or an attic, the hard-wired carbon monoxide detector with alarm and battery backup may be installed on the next adjacent floor level.
   b. In the event that the requirements of this subdivision cannot be met at the time of completion of installation, the owner shall have a period of thirty (30) days to comply with the above requirements; provided, however, that during said thirty (30) day period, a battery-operated carbon monoxide detector with an alarm shall be installed.
2. **APPROVED CARBON MONOXIDE DETECTORS.** Each carbon monoxide detector as required in accordance with the above provisions shall comply with NFPA 720 and be ANSI/UL 2034 listed and IAS certified.
3. **SIGNAGE**. A metal or plastic identification plate shall be permanently mounted to the exterior of the building at a minimum height of eight (8) feet above grade directly in line with the exhaust vent terminal for the horizontally vented, gas-fueled heating appliance or equipment. The sign shall read, in print size no less than one-half (1/2) inch in size, "**GAS VENT DIRECTLY BELOW. KEEP CLEAR OF ALL OBSTRUCTIONS.**"
4. **INSPECTION**. The state or local gas inspector of the side wall, horizontally vented, gas-fueled equipment shall not approve the installation unless, upon inspection, the inspector observes carbon monoxide detectors and signage installed in accordance with the provisions of 248 CMR 5.08(2)(a) 1 through 4.

EXEMPTIONS: The following equipment is exempt from 24 CMR 5.08(2)(a) 1 through 4:

1. The equipment listed in Chapter 10 entitled "Equipment Not Required to Be Vented" in the most current edition of NFPA 54 as adopted by the Board; and
2. Product Approved side wall, horizontally vented, gas-fueled equipment installed in a room or structure separate from the dwelling, building or structure used in whole or in part for residential purposes.

MANUFACTURER REQUIREMENTS - GAS EQUIPMENT VENTING SYSTEM PROVIDED.

When the manufacturer of Product Approved side wall, horizontally vented, gas-fueled equipment provides a venting system design or venting system components with the equipment, the instructions provided by the manufacturer for installation of the equipment and the venting system shall include:

1. Detailed instructions for the installation of the venting system design or the venting system components: and
2. A complete parts list for the venting system design or venting system.

MANUFACTURER REQUIREMENTS - GAS EQUIPMENT VENTING SYSTEM NOT PROVIDED.

When the manufacturer of Product Approved sidewall, horizontally vented, gas-fueled equipment does not provide the parts for venting the flue gases, but identifies "special venting systems," the following requirements shall be satisfied by the manufacturer:

1. The referenced "special venting system" instructions shall be included with the appliance or equipment installation instructions; and
2. The "special venting systems" shall be Product Approved by the Board, and the instructions for that system shall include a parts list and detailed installation instructions.

A copy of all installation instructions for all Product Approved side wall, horizontally vented, gas-fueled equipment, all venting instructions, all parts lists for venting instructions, and/or all venting design instructions shall remain with the appliance or equipment at the completion of the installation.