KASON Industries, Inc
0056 Latch Installation Instructions

For Safe operation use KASON ISR's models:
0480, 0483, 0481A, 0482A, 0486A, 0487A, 0489A, 0481SA

⚠ See Inside Release (ISR) Instructions for more details

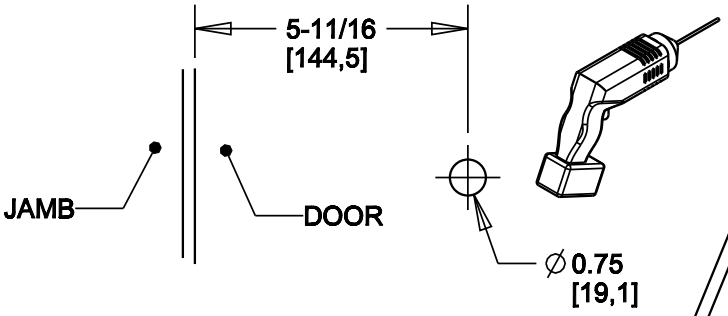

0056 Series Latch

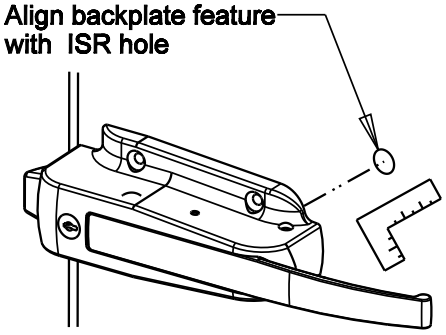

∅1/4 (6mm) Mounting fasteners not provided

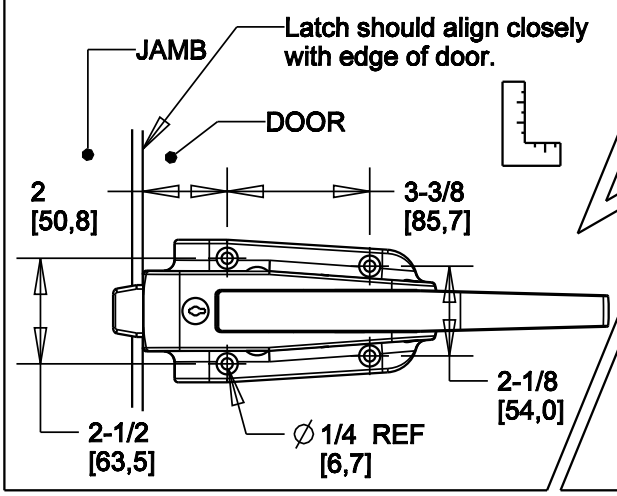

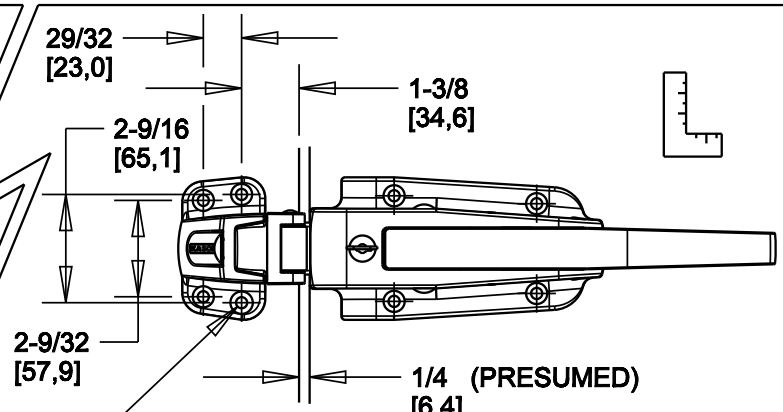

0056 Series Strike

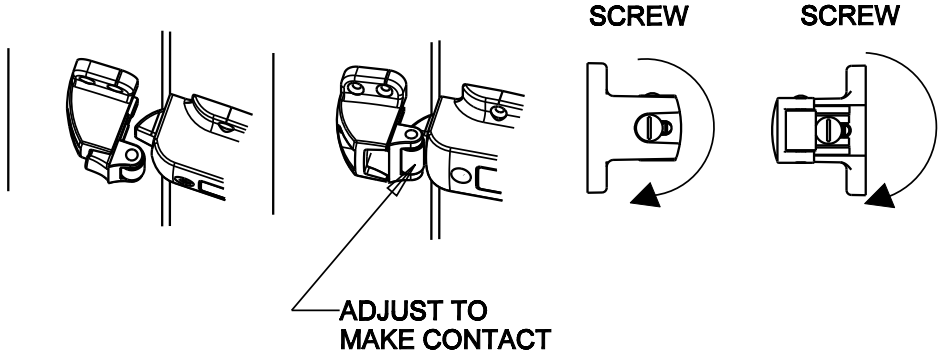

Light Spring,
Cylinder Model
10056CL5020 Polished Chrome

Light Spring,
Non-Cylinder Model
10056L05020 Polished Chrome

Strike	Offset
10056005002	1/8 Below - 1/4 Above
10056005003	3/4 - 1-1/2
10056005005	1-3/4 - 2-1/2
10056005008	3" - 4"

Above Models for Chrome finish.
Other finishes, springs available.

⚠ WARNING	This item may contain chemicals known to cause cancer or reproductive harm in the State of California.

WWW.P65Warnings.ca.gov

LOCKING OPERATION

1. CLOSE DOOR

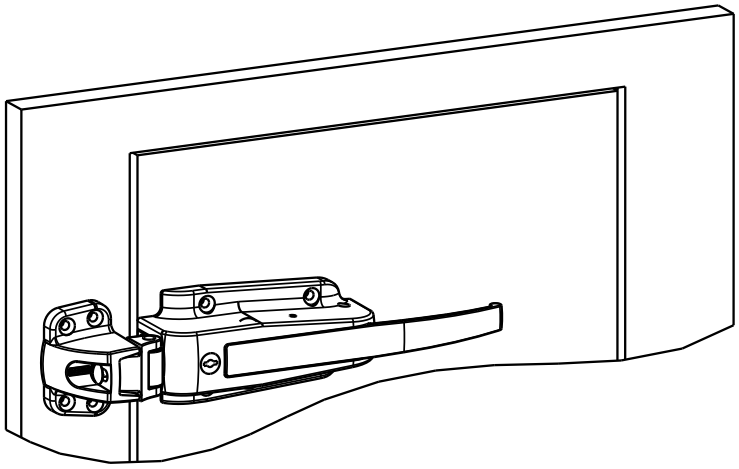

2. LOCK LATCH

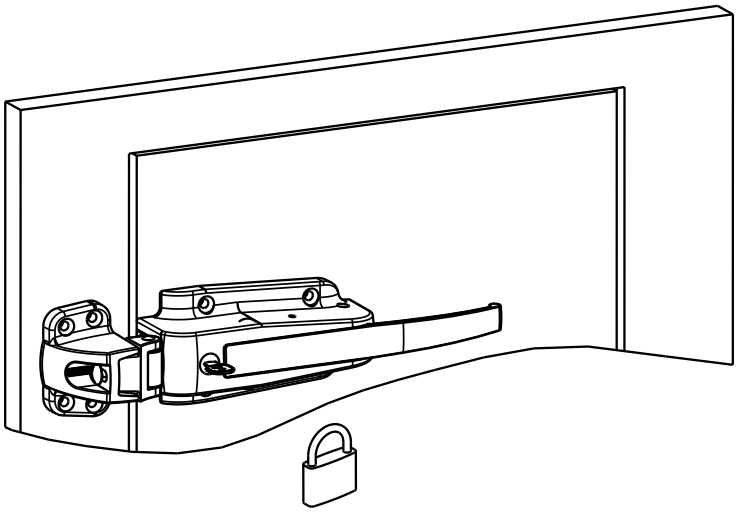

3. UNLOCK LATCH
4. OPEN DOOR
5. LEAVE THE LATCH UNLOCKED

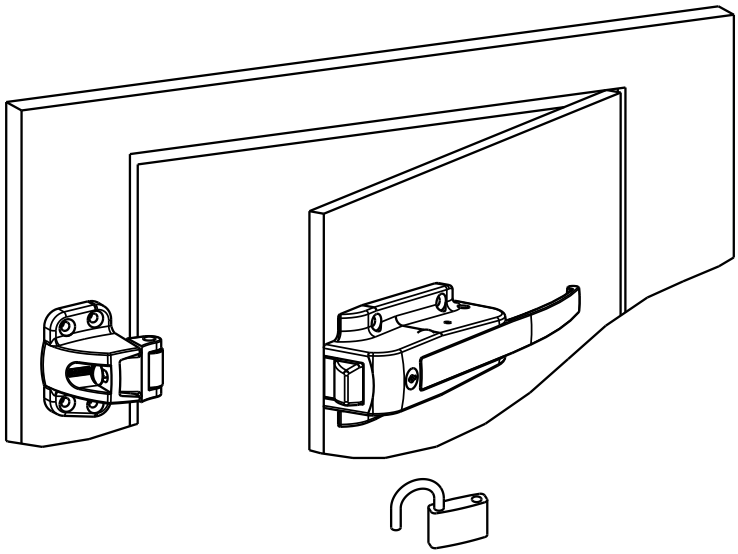

⚠ WARNING	DO NOT LOCK THE LATCH WHEN CLOSING THE DOOR