BOHN

BN-CM | **AUGUST 2026**
Replaces March 2026

CENTER MOUNT EVAPORATOR

Technical Guide

Including A2L and CO_2 90 Bar models meeting DOE minimum AWEF

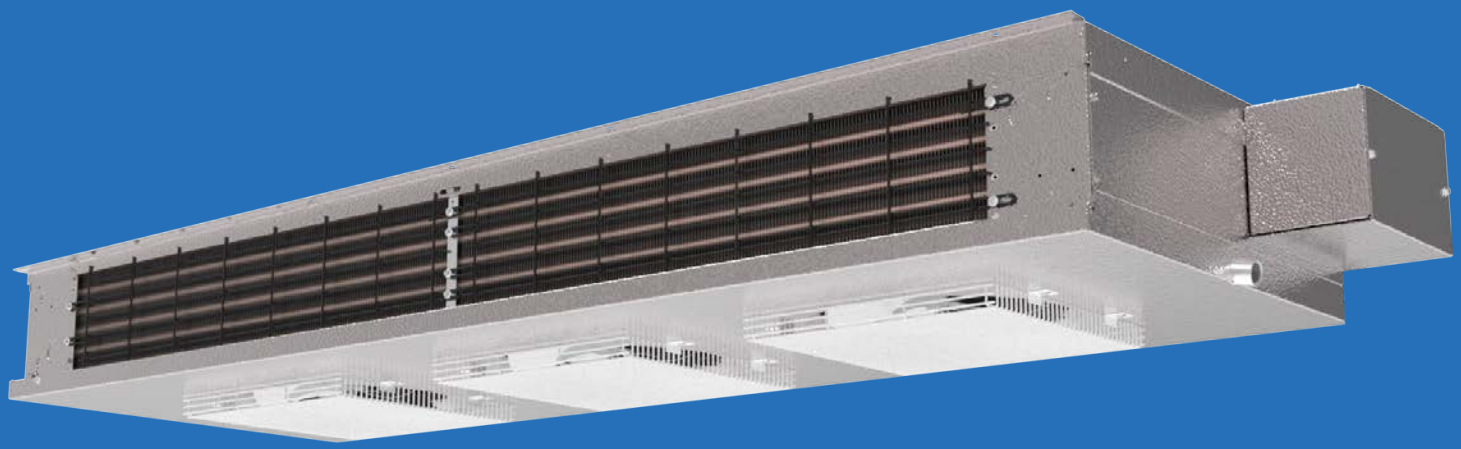

TABLE OF CONTENTS

3 Features & Benefits
4 Outstanding Features
5 Nomenclature
5 Preferred Option Packages
7 A2L & A1 Air Defrost
- 7 A2L Performance Data/Air Defrost- 60 Hz
- 8 A1 Performance Data/Air Defrost- 60 Hz
- 10 Unit Specifications

11 A2L & A1 Electric Defrost
- 11 A2L Performance Data-Low Temperature/Electric Defrost- 60 Hz
- 12 A1 Performance Data-Low Temperature/Electric Defrost- 60 Hz
- 14 A2L Performance Data-Medium Temperature/Electric Defrost- 60 Hz
- 15 A1 Performance Data-Medium Temperature/Electric Defrost- 60 Hz
- 17 Unit Specifications

18 Physical Data
19 Dimensional Drawings
20 Dimensional Data
22 AWEF Data
24 Replacement Parts
26 Standard Nozzle Selection

FEATURES & BENEFITS

CABINET

- Air moves across the ceiling in both directions providing even air distribution throughout the cooler
- Compact, ceiling mount and center mount design allows for shelving and storage of product around all walls
- Heavy-gauge grained aluminum cabinet cleans easily and looks attractive
- Cabinet design features improved access panels on each end for easy access to electrical and refrigeration components
- Improved wire management and routing
- Quick disconnect, waterproof plug and receptacle for each motor in all models
- Liquid line solenoid wire harness is factory-installed for quick installation

COIL

- High-efficiency aluminum fins with full collars cover mechanically expanded copper tubes
- Coils are dehydrated and sealed at the factory
- Electric defrost models incorporate high quality tubular heaters and a standard fixed defrost termination thermostat
- Generous coil surface gives proper compressor balance
- Standard adjustable defrost termination fan delay thermostat
- Internally enhanced tubing and fin design for higher efficiency
- Optimized heater placement with reduced heater wattages
- Fixed defrost termination for electric, adjustable defrost termination for hot gas

DRAIN PAN

- Hinged drain pan for faster, easier and safer access and serviceability
- Tapered mounting provides proper slope for condensate drainage to one end of the unit
- Double drain pan eliminates drain pan sweating

MOTOR

- Motor rail is design for maximum strength and durability
- Motors are life lubricated and thermal overload protected
- 2 Speed EC Motors are factory-installed

CONTROL OPTIONS

- intelliGen™ Refrigeration Controller (iRC) units come with a factory mounted controller, tested and calibrated with an electronic expansion valve, pressure transducer, temperature sensors, control board and user interface. Standard features include Door Sensor, Product Load Input and Alarm Output.
- Optional Factory or Field installable intelliGen Webserver Card (iWC) enables local and remote monitoring on any Phone, Tablet or PC.
- Optional Factory or Field installable intelliGen Integration Card (iIC) enables connectivity to BACnet and Modbus.

OTHER OPTIONS

- Factory installed mounted components are available in these configurations:
- Pre-assembled units available with mounted TXV, liquid line solenoid valve and room thermostat
- Mounted TXV
- Mounted TXV and solenoid valve
- Units available with stainless steel housing and drain pan
- Air defrost units are available with various coil coatings options

A2L FEATURES AND OPTIONS

- A2L and A1 dual refrigerants compatible models
- Factory mounted Refrigerant Detection System (RDS)
  - Mounted refrigerant leak detection sensors
  - Mounted refrigerant leak mitigation controller
  - Early warning leak detection with relay output for external alert devices
  - Mitigation alarm with relay output for external alarm devices
- Base model option available with or without RDS
- Field mounted Refrigerant Detection System kit available.
- Protection grill for evaporator coil
- Red tags on service valves and connection points as indicators for A2L refrigerants
- A2L labels to meet regulatory requirement

OUTSTANDING FEATURES

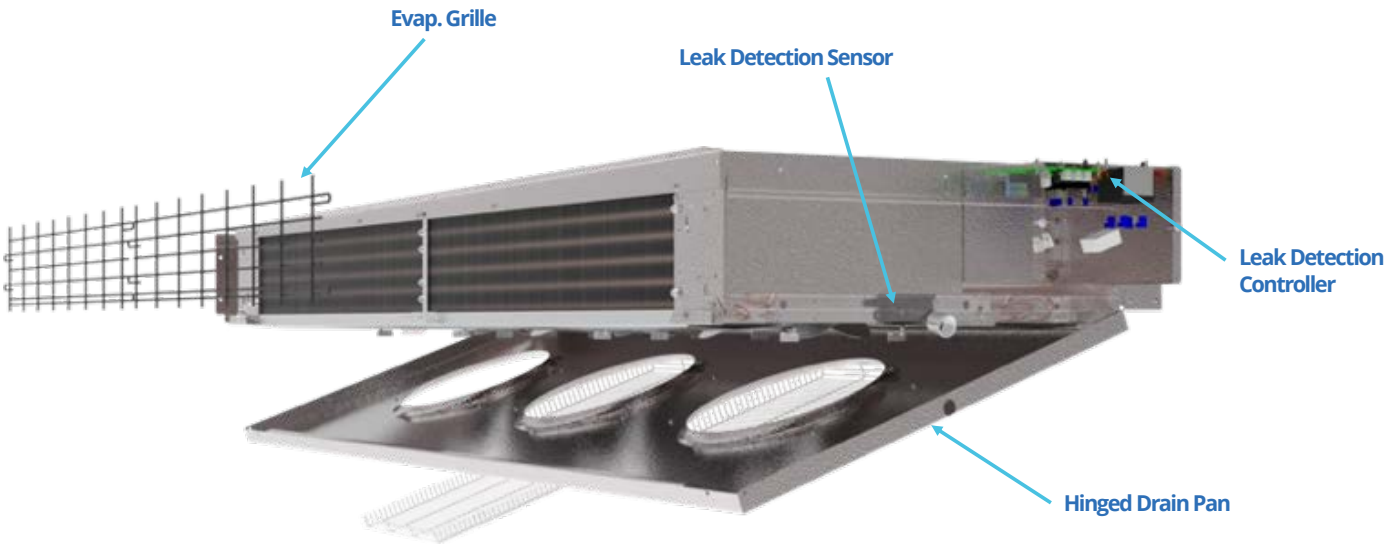

Table 1: Capacity Correction Factors

Electric and Hot Gas Defrost Units				
Saturated Suction Temperature °F	+20	-10	-20	-30
Saturated Suction Temperature °C	-7	-23	-29	-34
Multiply Capacity By	1.15	1.04	1.00	0.90

NOMENCLATURE

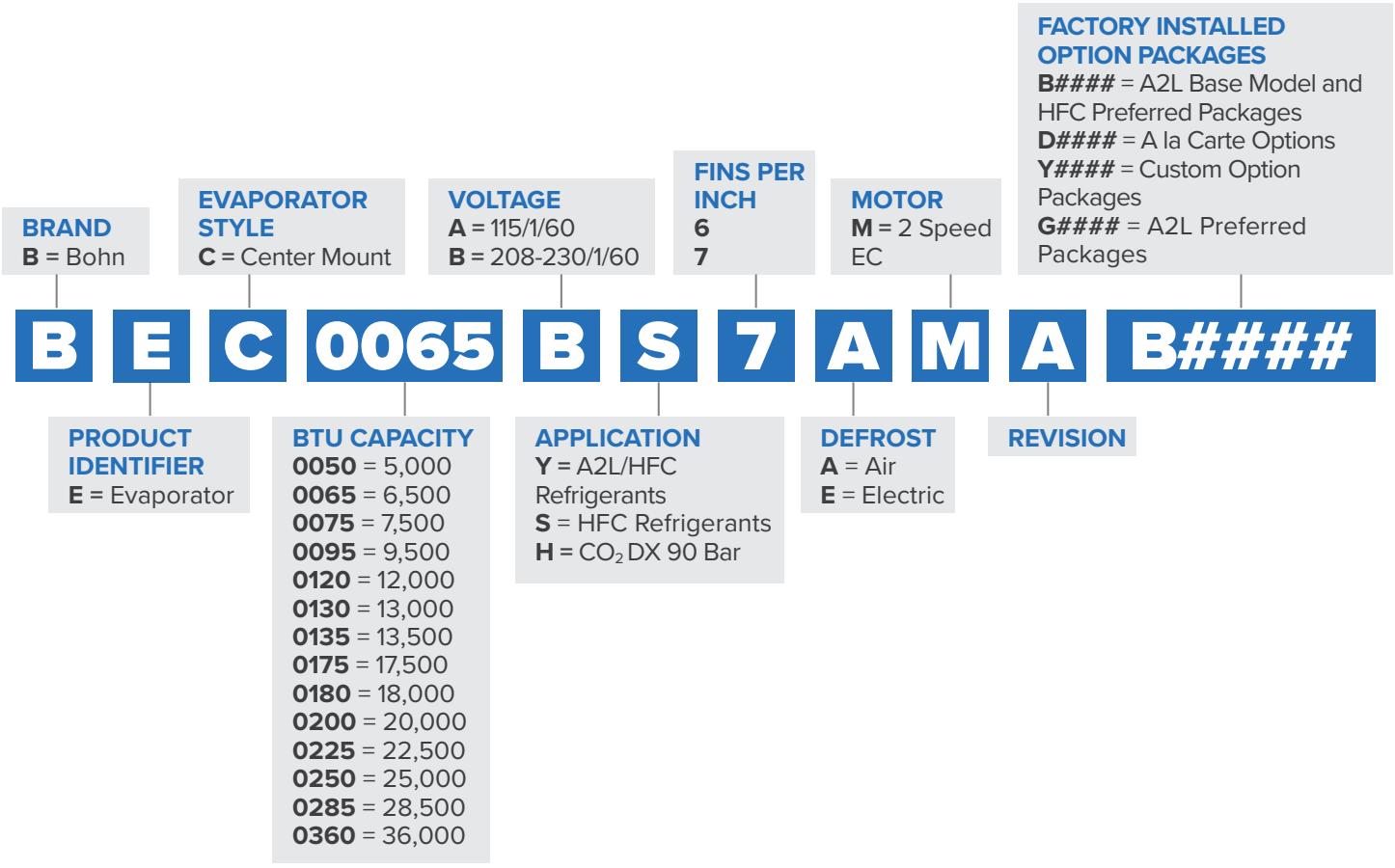

PREFERRED OPTION PACKAGES

Package	Description
B0200	intelliGen Refrigeration Controller (R-404A/R-448A/R-449A)
B0201	intelliGen Refrigeration Controller (R-407A/C/F)
B0403	Mounted Components (TXV, Solenoid Valve, Elec. T'stat - (R-404A)
B0404	Mounted Components (TXV, Solenoid Valve, Elec. T'stat - (R-407A/C/F)
B0405	Mounted Components (TXV, Solenoid Valve, Elec. T'stat - (R-448A/R-449A)
B0000	A2L/HFC Base Model
G0000	Standard Base with RDS
G0210	Standard Base with RDS + intelliGen™ (R-455A)
G0211	Standard Base with RDS + intelliGen™ (R-454C)
G0212	Standard Base with RDS + intelliGen™ (R-454A)
G0410	Standard Base with RDS + Mounted TXV + Solenoid Valve + Electronic T'Stat - (R-455A)
G0411	Standard Base with RDS + Mounted TXV + Solenoid Valve + Electronic T'Stat - (R-454C)
G0412	Standard Base with RDS + Mounted TXV + Solenoid Valve + Electronic T'Stat - (R-454A)

PREFERRED OPTION PACKAGES

(CO_2 DX 90 Bar)

Package	Description (standard base model features + indicated options below)
B0000	CO_2 90 Bar Base Model
B0200	intelliGen Refrigeration Controller (CO_2 90 Bar) (Filter Drier not included)
B0500	Danfoss EEV (120V) with 1/4" MPT Transducer Connection (Pressure Transducer not included)
B0502	Sporlan EEV (12V) with 1/4"MPT Transducer Connection (Pressure Transducer and Filter Drier not included)
B0503	Danfoss EEV (120V) with Danfoss Pressure Transducer
B0505	Danfoss EEV (120V) with CPC Pressure Transducer
B0507	Sporlan EEV (12V) with Microthermo Pressure Transducer (Filter Drier not included)

A2L PERFORMANCE DATA

Application Capacity: Air Defrost- 60 Hz

Please consult AWEF table on page 23 to confirm model meets DOE minimum AWEF

	R454A				R454C						
	Application Capacity[1]				Application Capacity[1]				Fan Data		
	10°F TD/ 25°F SST	6°C TD/ -4°C SST	Room Area Minimum**	Line Length	10°F TD/ 25°F SST	6°C TD/ -4°C SST	Room Area Minimum**	Line Length			
New Model	BTUH	Watts	Sq. Ft.	Ft.	BTUH	Watts	Sq. Ft.	Ft.	No. of Fans	CFM	m^3H
BEC0065*Y7AMA	6,500	1,905	32	10	5,300	1,553	31	10	1	610	1,036
BEC0095*Y7AMA	9,200	2,696	46	10	7,600	2,227	45	10	2	1,220	2,073
BEC0130*Y7AMA	13,100	3,839	46	10	10,800	3,165	45	10	2	1,220	2,073
BEC0175*Y7AMA	17,500	5,129	58	20	14,400	4,220	56	20	3	1,830	3,109
BEC0200*Y7AMA	20,100	5,891	58	20	16,500	4,836	56	20	3	1,830	3,109
BEC0225*Y7AMA	22,500	6,594	67	20	18,500	5,422	65	20	3	1,830	3,109
BEC0250*Y7AMA	24,900	7,297	70	20	20,500	6,008	67	20	4	2,440	4,146
BEC0285*Y7AMA	28,600	8,382	81	20	23,500	6,887	79	20	4	2,440	4,146
BEC0360*Y7AMA	36,100	10,580	96	20	29,700	8,704	93	20	5	3,050	5,182

	R455A						
	Application Capacity[1]				Fan Data		
	10°F TD/25°F SST	6°C TD/ -4°C SST	Room Area Minimum**	Line Length			
New Model	BTUH	Watts	Sq. Ft.	Ft.	No. of Fans	CFM	m^3H
BEC0065*Y7AMA	6,900	2,022	21	10	1	610	1,036
BEC0095*Y7AMA	9,800	2,872	30	10	2	1,220	2,073
BEC0130*Y7AMA	14,000	4,103	30	10	2	1,220	2,073
BEC0175*Y7AMA	18,700	5,480	38	20	3	1,830	3,109
BEC0200*Y7AMA	21,500	6,301	38	20	3	1,830	3,109
BEC0225*Y7AMA	24,100	7,063	44	20	3	1,830	3,109
BEC0250*Y7AMA	26,700	7,825	46	20	4	2,440	4,146
BEC0285*Y7AMA	30,600	8,968	53	20	4	2,440	4,146
BEC0360*Y7AMA	38,600	11,313	63	20	5	3,050	5,182

Notes:

[1] = Capacities shown are Application Capacities reflecting nominal operation at 10°F TD. For models within the scope of the DOE AWEF (Annual Walk-in Energy Factor) standard, the Net Capacity is determined by the AHRI 1250 test method. DOE will publish this compliance data at www.regulations.doe.gov

* = Electrical Code Designator (see Nomenclature details)

Net Capacity is available upon request

± = Y/S (see Nomenclature details)

** Room Area Minumum is calculated using the Line Length from the Safety Shut-off Valve (SSOV) to the Unit Cooler. For applications requiring other line lengths, please contact Heatcraft Representative for Room Area Minimum re-calculation.

A1 PERFORMANCE DATA

Application Capacity: Air Defrost- 60 Hz

Please consult AWEF table on page 23 to confirm model meets DOE minimum AWEF

		R-404A/R-507A		R-448A/R-449A				
		Application Capacity[1]		Application Capacity[1]		Fan Data		
New Model	Legacy Model	10°F TD/25°F SST	6°C TD/-4°C SST	10°F TD/25°F SST	6°C TD/-4°C SST			
		BTUH	Watts	BTUH	Watts	No. of Fans	CFM	m^3H
BEC0065*±7AMA	SM052	5,200	1,524	6,400	1,875	1	610	1,036
BEC0095*±7AMB	SM076 SM090	7,000	2,051	9,100	2,666	2	1,220	2,073
BEC0130*±7AMA	SM102	9,100	2,666	13,000	3,809	2	1,220	2,073
BEC0175*±7AMA	SM108	10,800	3,164	17,350	5,084	3	1,830	3,109
BEC0200*±7AMA	SM134	13,400	3,926	19,900	5,831	3	1,830	3,109
BEC0225*±7AMA	SM156	15,600	4,571	22,300	6,534	3	1,830	3,109
BEC0250*±7AMA	SM179	17,900	5,245	24,700	7,237	4	2,440	4,146
BEC0285*±7AMA	SM208	20,800	6,094	28,300	8,292	4	2,440	4,146
BEC0360*±7AMA	SM249	24,900	7,296	35,750	10,475	5	3,050	5,182

		R-407A/R-407F		R-407C				
		Application Capacity[1]		Application Capacity[1]		Fan Data		
New Model	Legacy Model	10°F TD/25°F SST	6°C TD/-4°C SST	10°F TD/25°F SST	6°C TD/-4°C SST			
		BTUH	Watts	BTUH	Watts	No. of Fans	CFM	m^3H
BEC0065*±7AMA	SM052	6,400	1,875	6,400	1,875	1	610	1,036
BEC0095*±7AMB	SM076 SM090	9,100	2,666	9,100	2,666	2	1,220	2,073
BEC0130*±7AMA	SM102	13,000	3,809	13,000	3,809	2	1,220	2,073
BEC0175*±7AMA	SM108	17,350	5,084	17,350	5,084	3	1,830	3,109
BEC0200*±7AMA	SM134	19,900	5,831	19,900	5,831	3	1,830	3,109
BEC0225*±7AMA	SM156	22,300	6,534	22,300	6,534	3	1,830	3,109
BEC0250*±7AMA	SM179	24,700	7,237	24,700	7,237	4	2,440	4,146
BEC0285*±7AMA	SM208	28,300	8,292	28,300	8,292	4	2,440	4,146
BEC0360*±7AMA	SM249	35,750	10,475	35,750	10,475	5	3,050	5,182

Notes:

[1] = Capacities shown are Application Capacities reflecting nominal operation at 10°F TD. For models within the scope of the DOE AWEF (Annual Walk-in Energy Factor) standard, the Net Capacity is determined by the AHRI 1250 test method. DOE will publish this compliance data at www.regulations.doe.gov

* = Electrical Code Designator (see Nomenclature details)

Net Capacity is available upon request

± = Y/S (see Nomenclature details)

A1 PERFORMANCE DATA

Application Capacity: Air Defrost- 60 Hz

Please consult AWEF table on page 23 to confirm model meets DOE minimum AWEF

	CO_2 90 Bar				
	Application Capacity[1]		Fan Data		
	10°F TD/25°F SST	6°C TD/4°C SST			
New Model	BTUH	Watts	No. of Fans	CFM	m^3H
BEC0065^H7AMA	6,400	1,875	1	610	1,036
BEC0095^H7AMA	9,100	2,666	2	1,220	2,073
BEC0130^H7AMA	13,000	3,809	2	1,220	2,073
BEC0175^H7AMA	17,350	5,084	3	1,830	3,109
BEC0200^H7AMA	19,900	5,831	3	1,830	3,109
BEC0225^H7AMA	22,300	6,534	3	1,830	3,109
BEC0250^H7AMA	24,700	7,237	4	2,440	4,146
BEC0285^H7AMA	28,300	8,292	4	2,440	4,146
BEC0360^H7AMA	35,750	10,475	5	3,050	5,182

Notes:

[1] = Capacities shown are Application Capacities reflecting nominal operation at 10°F TD. For models within the scope of the DOE AWEF (Annual Walk-in Energy Factor) standard, the Net Capacity is determined by the AHRI 1250 test method. DOE will publish this compliance data at www.regulations.doe.gov

* = Electrical Code Designator (see Nomenclature details)

Net Capacity is available upon request

± = Y/S (see Nomenclature details)

SPECIFICATIONS

Air Defrost- 60 Hz

Please consult AWEF table on page 23 to confirm model meets DOE minimum AWEF

New Model	HP	2 Speed EC Motor							
		115/1/60				208-230/1/60			
		Amps	Watts	MCA	MOPD	Amps	Watts	MCA	MOPD
BEC0065*±7AMA	1/20	0.8	55	1.1	20	0.4	55	0.6	15
BEC0095*±7AMA	1/20	1.7	110	2.0	20	0.8	110	1.1	15
BEC0130*±7AMA	1/20	1.7	110	2.0	20	0.8	110	1.1	15
BEC0175*±7AMA	1/20	2.5	165	2.9	20	1.3	165	1.6	15
BEC0200*±7AMA	1/20	2.5	165	2.9	20	1.3	165	1.6	15
BEC0225*±7AMA	1/20	2.5	165	2.9	20	1.3	165	1.6	15
BEC0250*±7AMA	1/20	3.4	220	3.8	20	1.7	220	2.1	15
BEC0285*±7AMA	1/20	3.4	220	3.8	20	1.7	220	2.1	15
BEC0360*±7AMA	1/20	4.2	275	4.7	20	2.1	275	2.6	15

Notes:

[1] = Capacities shown are Application Capacities reflecting nominal operation at 10°F TD. For models within the scope of the DOE AWEF (Annual Walk-in Energy Factor) standard, the Net Capacity is determined by the AHRI 1250 test method. DOE will publish this compliance data at www.regulations.doe.gov

* = Electrical Code Designator (see Nomenclature details)

Net Capacity is available upon request

± = Y/S/H (see Nomenclature details)

A2L PERFORMANCE DATA

Application Capacity: Low Temperature Electric Defrost- 60 Hz

Please consult AWEF table on page 24 to confirm model meets DOE minimum AWEF

Please refer to Table 1: Capacity Correction Factors (page 4) if using Saturated Suction Temperatures different than listed in the information below

	R454A				R454C						
	Application Capacity[1]				Application Capacity[1]				Fan Data		
	10°F TD/ -20°F SST	6°C TD/ -29°C SST	Room Area Minimum**	Line Length	10°F TD/ -20°F SST	6°C TD/ -29°C SST	Room Area Minimum**	Line Length			
New Model	BTUH	Watts	Sq. Ft.	Ft.	BTUH	Watts	Sq. Ft.	Ft.	No. of Fans	CFM	m^3H
BEC0050BY6EMA	5,300	1,553	32	10	4,600	1,348	31	10	1	610	1,036
BEC0075BY6EMA	8,400	2,462	40	10	7,200	2,110	39	10	2	1,220	2,073
BEC0120BY6EMA	13,200	3,869	52	10	11,300	3,312	51	10	3	1,830	3,109
BEC0135BY6EMA	15,200	4,455	61	10	13,000	3,810	59	10	3	1,830	3,109
BEC0180BY6EMA	20,500	6,008	81	20	17,500	5,129	79	20	4	2,440	4,146
BEC0255BY6EMA	24,700	7,239	96	20	21,200	6,213	93	20	5	3,050	5,182
BEC0280BY6EMA	27,200	7,972	96	20	23,200	6,799	93	20	5	3,050	5,182

	R455A						
	Application Capacity[1]				Fan Data		
	10°F TD/-20°F SST	6°C TD/-29°C SST	Room Area Minimum**	Line Length			
New Model	BTUH	Watts	Sq. Ft.	Ft.	No. of Fans	CFM	m^3H
BEC0050BY6EMA	5,200	1,524	32	10	1	610	1,036
BEC0075BY6EMA	8,300	2,432	40	10	2	1,220	2,073
BEC0120BY6EMA	12,900	3,781	52	10	3	1,830	3,109
BEC0135BY6EMA	14,900	4,367	61	10	3	1,830	3,109
BEC0180BY6EMA	20,000	5,861	81	20	4	2,440	4,146
BEC0255BY6EMA	24,200	7,092	96	20	5	3,050	5,182
BEC0280BY6EMA	26,600	7,796	96	20	5	3,050	5,182

Notes:

[1] = Capacities shown are Application Capacities reflecting nominal operation at 10°F TD. For models within the scope of the DOE AWEF (Annual Walk-in Energy Factor) standard, the Net Capacity is determined by the AHRI 1250 test method. DOE will publish this compliance data at www.regulations.doe.gov

Net Capacity is available upon request

** Room Area Minumum is calculated using the Line Length from the Safety Shut-off Valve (SSOV) to the Unit Cooler. For applications requiring other line lengths, please contact Heatcraft Representative for Room Area Minimum re-calculation.

A1 PERFORMANCE DATA

Application Capacity: Low Temperature Electric Defrost- 60 Hz

Please consult AWEF table on page 24 to confirm model meets DOE minimum AWEF

Please refer to Table 1: Capacity Correction Factors (page 4) if using Saturated Suction Temperatures different than listed in the information below

		R-404A/R-507A		R-448A/R-449A				
		Application Capacity[1]		Application Capacity[1]		Fan Data		
New Model	Legacy Model	10°F TD/-20°F SST	6°C TD/-29°C SST	10°F TD/-20°F SST	6°C TD/-29°C SST			
		BTUH	Watts	BTUH	Watts	No. of Fans	CFM	m^3H
BEC0050B±6EMA	SME040	4,000	1,172	5,500	1,612	1	610	1,036
BEC0075B±6EMA	SME054 SME065	6,500	1,905	8,700	2,549	2	1,220	2,073
BEC0120B±6EMA	SME090	9,000	2,637	13,600	3,985	3	1,830	3,109
BEC0135B±6EMA	SME130	13,000	3,809	15,700	4,600	3	1,830	3,109
BEC0180B±6EMA	SME174	17,400	5,098	21,100	6,182	4	2,440	4,146
BEC0255B±6EMA	N/A	18,000	5,274	25,500	7,472	5	3,050	5,182
BEC0280B±6EMA	N/A	19,000	5,567	28,000	8,204	5	3,050	5,182

		R-407A/R-407F		R-407C				
		Application Capacity[1]		Application Capacity[1]		Fan Data		
New Model	Legacy Model	10°F TD/-20°F SST	6°C TD/-29°C SST	10°F TD/-20°F SST	6°C TD/-29°C SST			
		BTUH	Watts	BTUH	Watts	No. of Fans	CFM	m^3H
BEC0050B±6EMA	SME040	5,500	1,612	5,500	1,612	1	610	1,036
BEC0075B±6EMA	SME054 SME065	8,700	2,549	8,700	2,549	2	1,220	2,073
BEC0120B±6EMA	SME090	13,600	3,985	13,600	3,985	3	1,830	3,109
BEC0135B±6EMA	SME130	15,700	4,600	15,700	4,600	3	1,830	3,109
BEC0180B±6EMA	SME174	21,100	6,182	21,100	6,182	4	2,440	4,146
BEC0255B±6EMA	N/A	25,500	7,472	25,500	7,472	5	3,050	5,182
BEC0280B±6EMA	N/A	28,000	8,204	28,000	8,204	5	3,050	5,182

Notes:

[1] = Capacities shown are Application Capacities reflecting nominal operation at 10°F TD. For models within the scope of the DOE AWEF (Annual Walk-in Energy Factor) standard, the Net Capacity is determined by the AHRI 1250 test method. DOE will publish this compliance data at www.regulations.doe.gov

Net Capacity is available upon request

± = Y/S (see Nomenclature details)

A1 PERFORMANCE DATA

Application Capacity: Low Temperature Electric Defrost- 60 Hz

Please consult AWEF table on page 24 to confirm model meets DOE minimum AWEF

Please refer to Table 1: Capacity Correction Factors (page 4) if using Saturated Suction Temperatures different than listed in the information below

	CO_2 90 Bar				
	Application Capacity[1]		Fan Data		
	10°F TD/-20°F SST	6°C TD/-29°C SST			
New Model	BTUH	Watts	No. of Fans	CFM	m^3H
BEC0050^H6EMA	5,500	1,612	1	610	1,036
BEC0075^H6EMA	8,700	2,549	2	1,220	2,073
BEC0120^H6EMA	13,600	3,985	3	1,830	3,109
BEC0135^H6EMA	15,700	4,600	3	1,830	3,109
BEC0180^H6EMA	21,100	6,182	4	2,440	4,146
BEC0255^H6EMA	25,500	7,472	5	3,050	5,182
BEC0280^H6EMA	28,000	8,204	5	3,050	5,182

Notes:

[1] = Capacities shown are Application Capacities reflecting nominal operation at 10°F TD. For models within the scope of the DOE AWEF (Annual Walk-in Energy Factor) standard, the Net Capacity is determined by the AHRI 1250 test method. DOE will publish this compliance data at www.regulations.doe.gov

Net Capacity is available upon request

± = Y/S (see Nomenclature details)

A2L PERFORMANCE DATA

Application Capacity: Medium Temperature Electric Defrost- 60 Hz

Please consult AWEF table on page 24 to confirm model meets DOE minimum AWEF

Please refer to Table 1: Capacity Correction Factors (page 4) if using Saturated Suction Temperatures different than listed in the information below

	R454A				R454C						
	Application Capacity[1]				Application Capacity[1]				Fan Data		
	10°F TD/ 25°F SST	6°C TD/ -4°C SST	Room Area Minimum**	Line Length	10°F TD/ 25°F SST	6°C TD/ -4°C SST	Room Area Minimum**	Line Length			
New Model	BTUH	Watts	Sq. Ft.	Ft.	BTUH	Watts	Sq. Ft.	Ft.	No. of Fans	CFM	m^3H
BEC0050BY6EMA	6,400	1,876	32	10	5,200	1,524	31	10	1	610	1,036
BEC0075BY6EMA	10,100	2,960	40	10	8,300	2,432	39	10	2	1,220	2,073
BEC0120BY6EMA	15,800	4,631	52	10	13,000	3,810	51	10	3	1,830	3,109
BEC0135BY6EMA	18,200	5,334	61	10	15,000	4,396	59	10	3	1,830	3,109
BEC0180BY6EMA	24,500	7,180	81	20	20,100	5,891	79	20	4	2,440	4,146
BEC0255BY6EMA	29,600	8,675	96	20	24,300	7,122	93	20	5	3,050	5,182
BEC0280BY6EMA	32,500	9,525	96	20	26,700	7,825	93	20	5	3,050	5,182

	R455A						
	Application Capacity[1]				Fan Data		
	10°F TD/25°F SST	6°C TD/-4°C SST	Room Area Minimum**	Line Length			
New Model	BTUH	Watts	Sq. Ft.	Ft.	No. of Fans	CFM	m^3H
BEC0050BY6EMA	6,800	1,993	32	10	1	610	1,036
BEC0075BY6EMA	10,800	3,165	40	10	2	1,220	2,073
BEC0120BY6EMA	16,900	4,953	52	10	3	1,830	3,109
BEC0135BY6EMA	19,500	5,715	61	10	3	1,830	3,109
BEC0180BY6EMA	26,200	7,678	81	20	4	2,440	4,146
BEC0255BY6EMA	31,700	9,290	96	20	5	3,050	5,182
BEC0280BY6EMA	34,800	10,199	96	20	5	3,050	5,182

Notes:

[1] = Capacities shown are Application Capacities reflecting nominal operation at 10°F TD. For models within the scope of the DOE AWEF (Annual Walk-in Energy Factor) standard, the Net Capacity is determined by the AHRI 1250 test method. DOE will publish this compliance data at www.regulations.doe.gov

† = Number of fans increases from legacy to new model

Net Capacity is available upon request

** Room Area Minumum is calculated using the Line Length from the Safety Shut-off Valve (SSOV) to the Unit Cooler. For applications requiring other line lengths, please contact Heatcraft Representative for Room Area Minimum re-calculation.

A1 PERFORMANCE DATA

Application Capacity: Medium Temperature Electric Defrost- 60 Hz

Please consult AWEF table on page 24 to confirm model meets DOE minimum AWEF

Please refer to Table 1: Capacity Correction Factors (page 4) if using Saturated Suction Temperatures different than listed in the information below

		R-404A/R-507A		R-448A/R-449A				
		Application Capacity[1]		Application Capacity[1]		Fan Data		
	Legacy Model	10°F TD/25°F SST	6°C TD/-4°C SST	10°F TD/25°F SST	6°C TD/-4°C SST			
New Model		BTUH	Watts	BTUH	Watts	No. of Fans	CFM	m^3H
BEC0050B±6EMA	SME040	4,600	1,348	6,325	1,853	1	610	1,036
BEC0075B±6EMA	SME054 SME065	7,450	2,183	10,005	2,931	2	1,220	2,073
BEC0120B±6EMA	SME090	10,350	3,033	15,640	4,583	3	1,830	3,109
BEC0135B±6EMA	SME130	14,950	4,380	18,055	5,290	3	1,830	3,109
BEC0180B±6EMA	SME174	20,000	5,860	24,265	7,110	4	2,440	4,146
BEC0255B±6EMA	N/A	20,700	6,065	29,325	8,592	5	3,050	5,182
BEC0280B±6EMA	N/A	21,850	6,402	32,200	9,435	5	3,050	5,182

		R-407A/R-407F		R-407C				
		Application Capacity[1]		Application Capacity[1]		Fan Data		
	Legacy Model	10°F TD/25°F SST	6°C TD/-4°C SST	10°F TD/25°F SST	6°C TD/-4°C SST			
New Model		BTUH	Watts	BTUH	Watts	No. of Fans	CFM	m^3H
BEC0050B±6EMA	SME040	6,325	1,853	6,325	1,853	1	610	1,036
BEC0075B±6EMA	SME054 SME065	10,005	2,931	10,005	2,931	2	1,220	2,073
BEC0120B±6EMA	SME090	15,640	4,583	15,640	4,583	3	1,830	3,109
BEC0135B±6EMA	SME130	18,055	5,290	18,055	5,290	3	1,830	3,109
BEC0180B±6EMA	SME174	24,265	7,110	24,265	7,110	4	2,440	4,146
BEC0255B±6EMA	N/A	29,325	8,592	29,325	8,592	5	3,050	5,182
BEC0280B±6EMA	N/A	32,200	9,435	32,200	9,435	5	3,050	5,182

Notes:

[1] = Capacities shown are Application Capacities reflecting nominal operation at 10°F TD. For models within the scope of the DOE AWEF (Annual Walk-in Energy Factor) standard, the Net Capacity is determined by the AHRI 1250 test method. DOE will publish this compliance data at www.regulations.doe.gov

[†] = Number of fans increases from legacy to new model

Net Capacity is available upon request

± = Y/S (see Nomenclature details)

A1 PERFORMANCE DATA

Application Capacity: Medium Temperature Electric Defrost- 60 Hz

Please consult AWEF table on page 24 to confirm model meets DOE minimum AWEF

Please refer to Table 1: Capacity Correction Factors (page 4) if using Saturated Suction Temperatures different than listed in the information below

	CO_2 90 Bar				
	Application Capacity[1]		Fan Data		
	10°F TD/25°F SST	6°C TD/4°C SST			
New Model	BTUH	Watts	No. of Fans	CFM	m^3H
BEC0050^H6EMA	6,325	1,853	1	610	1,036
BEC0075^H6EMA	10,005	2,931	2	1,220	2,073
BEC0120^H6EMA	15,640	4,583	3	1,830	3,109
BEC0135^H6EMA	18,055	5,290	3	1,830	3,109
BEC0180^H6EMA	24,265	7,110	4	2,440	4,146
BEC0255^H6EMA	29,325	8,592	5	3,050	5,182
BEC0280^H6EMA	32,200	9,435	5	3,050	5,182

SPECIFICATIONS

Electric Defrost- 60 Hz

Please consult AWEF table on page 24 to confirm model meets DOE minimum AWEF

Please refer to Table 1: Capacity Correction Factors (page 4) if using Saturated Suction Temperatures different than listed in the information below

New Model	HP	2 Speed EC Motor (Totally Enclosed)				Defrost Heaters	
		208-230/1/60					
		Amps	Watts	MCA	MOPD	Watts	Total Amps
BEC0050B±6EMA	1/20	0.4	55	0.6	15	1,200	5.3
BEC0075B±6EMA	1/20	0.8	110	1.1	15	2,000	8.7
BEC0120B±6EMA	1/20	1.3	165	1.6	15	2,400	10.5
BEC0135B±6EMA	1/20	1.3	165	1.6	15	3,600	15.7
BEC0180B±6EMA	1/20	1.7	220	2.1	15	4,800	20.9
BEC0255B±6EMA	1/20	2.1	275	2.6	15	6,000	26.1
BEC0280B±6EMA	1/20	2.1	275	2.6	15	6,000	26.1

PHYSICAL DATA

Air Defrost

Model	No. of Fans	Coil Inlet OD	Suction OD	Equalizer OD	Drain MPT	Approx. Net Weight	
						lb	kg
BEC0065*±7AMA	1	3/8	1 - 1/8	1/4	3/4	55	25
BEC0095*±7AMA	2	3/8	1 - 1/8	1/4	3/4	105	48
BEC0130*±7AMA	2	3/8	1 - 1/8	1/4	3/4	105	48
BEC0175*±7AMA	3	3/8	1 - 1/8	1/4	3/4	131	59
BEC0200*±7AMA	3	3/8	1 - 1/8	1/4	3/4	146	66
BEC0225*±7AMA	3	3/8	1 - 1/8	1/4	3/4	153	69
BEC0250*±7AMA	4	3/8	1 - 1/8	1/4	3/4	185	84
BEC0285*±7AMA	4	3/8	1 - 1/8	1/4	3/4	203	92
BEC0360*±7AMA	5	3/8	1 - 1/8	1/4	3/4	254	115

Air Defrost (CO_2 90 Bar)

Model	No. of Fans	Coil Inlet OD	Suction OD	Drain MPT	Approx. Net Weight	
					lb	kg
BEC0065^H7AMA	1	3/8	5/8	3/4	62	28
BEC0095^H7AMA	2	3/8	5/8	3/4	118	54
BEC0130^H7AMA	2	3/8	5/8	3/4	118	54
BEC0175^H7AMA	3	3/8	5/8	3/4	147	67
BEC0200^H7AMA	3	3/8	5/8	3/4	162	74
BEC0225^H7AMA	3	3/8	5/8	3/4	169	77
BEC0250^H7AMA	4	3/8	5/8	3/4	207	94
BEC0285^H7AMA	4	3/8	5/8	3/4	225	102
BEC0360^H7AMA	5	3/8	5/8	3/4	288	131

Electric Defrost

Model	No. of Fans	Coil Inlet OD	Suction OD	Equalizer OD	Drain MPT	Approx. Net Weight	
						lb	kg
BEC0050B±6EMA	1	3/8	1 - 1/8	1/4	3/4	113	51
BEC0075B±6EMA	2	3/8	1 - 1/8	1/4	3/4	149	68
BEC0120B±6EMA	3	3/8	1 - 1/8	1/4	3/4	197	89
BEC0135B±6EMA	3	3/8	1 - 1/8	1/4	3/4	214	97
BEC0180B±6EMA	4	3/8	1 - 1/8	1/4	3/4	268	122
BEC0255B±6EMA	5	1/2	1 - 1/8	1/4	3/4	296	134
BEC0280B±6EMA	5	1/2	1 - 1/8	1/4	3/4	296	134

Electric Defrost (CO_2 90 Bar)

Model	No. of Fans	Coil Inlet OD	Suction OD	Drain MPT	Approx. Net Weight	
					lb	kg
BEC0050^H6EMA	1	3/8	5/8	3/4	120	54
BEC0075^H6EMA	2	3/8	5/8	3/4	162	74
BEC0120^H6EMA	3	3/8	5/8	3/4	213	97
BEC0135^H6EMA	3	3/8	5/8	3/4	230	105
BEC0180^H6EMA	4	3/8	5/8	3/4	290	132
BEC0255^H6EMA	5	3/8	5/8	3/4	330	150
BEC0280^H6EMA	5	3/8	5/8	3/4	330	150

Notes:
* = Electrical Code Designator (see Nomenclature details)
All connections are in “

DIMENSIONAL DRAWINGS

A1 Dimensional Drawings

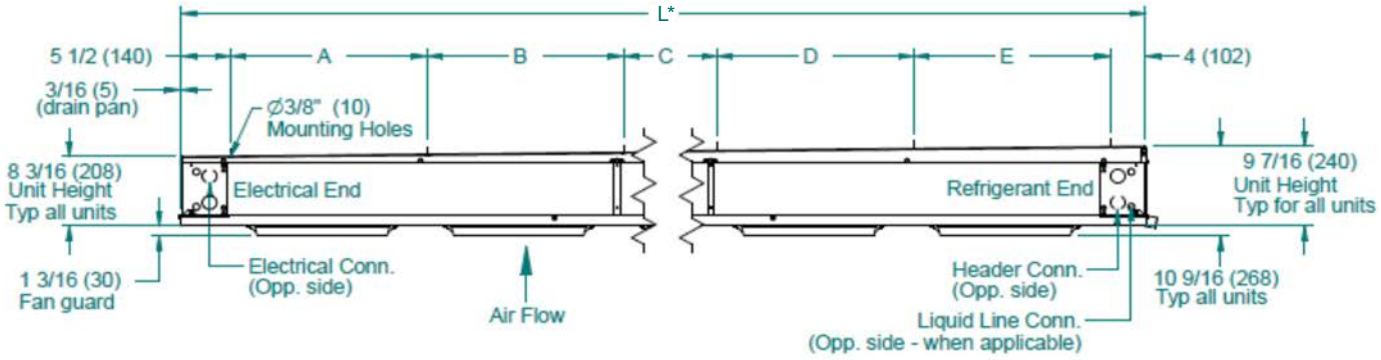

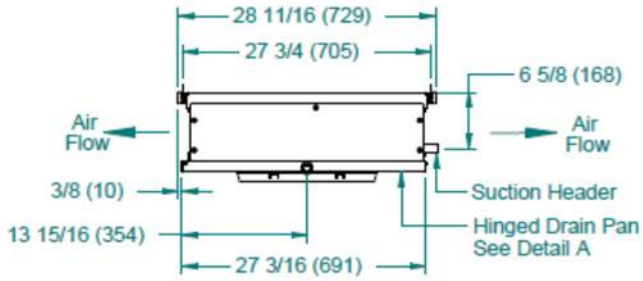

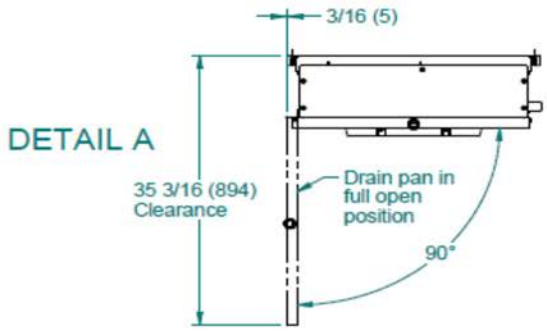

*Unit Cooler with factory mounted intelliGen controller adds 5 7/8“ to the overall length of the unit

A2L Dimensional Drawings

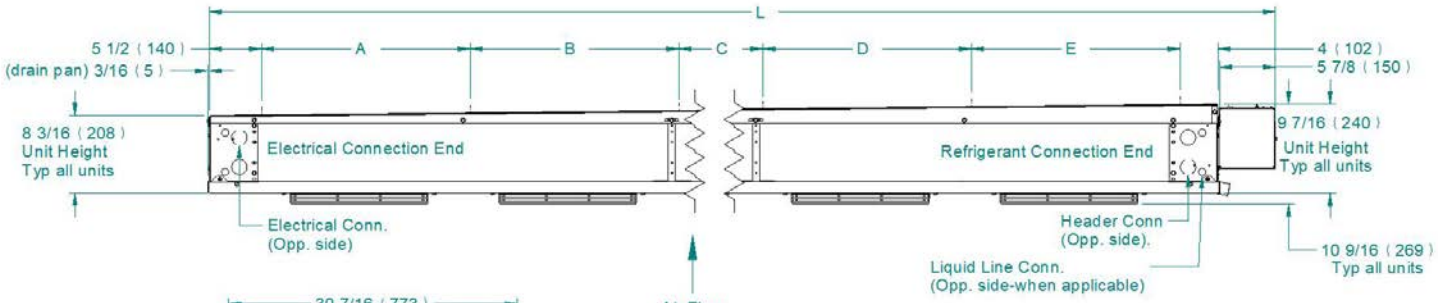

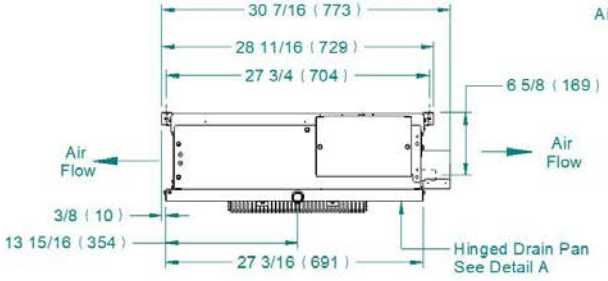

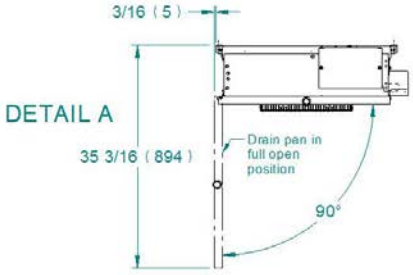

DIMENSIONAL DATA

A1 Dimensional Data For Air Defrost

Model	No. of Fans	L	A	B	C	D	E
		Inches (mm)	Inches (mm)	Inches (mm)	Inches (mm)	Inches (mm)	Inches (mm)
BEC0065*±7AMA	1	31 1/2 (800)	22 (559)	-	-	-	-
BEC0095*±7AMB	2	53 1/2 (1359)	22 (559)	22 (559)	-	-	-
BEC0130*±7AMA	2	53 1/2 (1359)	22 (559)	22 (559)	-	-	-
BEC0175*±7AMA	3	75 1/2 (1918)	22 (559)	22 (559)	22 (559)	-	-
BEC0200*±7AMA	3	75 1/2 (1918)	22 (559)	22 (559)	22 (559)	-	-
BEC0225*±7AMA	3	75 1/2 (1918)	22 (559)	22 (559)	22 (559)	-	-
BEC0250*±7AMA	4	97 1/2 (2477)	22 (559)	22 (559)	22 (559)	22 (559)	-
BEC0285*±7AMA	4	97 1/2 (2477)	22 (559)	22 (559)	22 (559)	22 (559)	-
BEC0360*±7AMA	5	119 1/2 (3035)	22 (559)	22 (559)	22 (559)	22 (559)	22 (559)

A2L Dimensional Data For Air Defrost

Model	No. of Fans	L	A	B	C	D	E
		Inches (mm)	Inches (mm)	Inches (mm)	Inches (mm)	Inches (mm)	Inches (mm)
BEC0065*Y7AMA	1	37 1/2 (954)	22 (559)	-	-	-	-
BEC0095*Y7AMA	2	59 1/2 (1513)	22 (559)	22 (559)	-	-	-
BEC0130*Y7AMA	2	59 1/2 (1513)	22 (559)	22 (559)	-	-	-
BEC0175*Y7AMA	3	81 1/2 (2071)	22 (559)	22 (559)	22 (559)	-	-
BEC0200*Y7AMA	3	81 1/2 (2071)	22 (559)	22 (559)	22 (559)	-	-
BEC0225*Y7AMA	3	81 1/2 (2071)	22 (559)	22 (559)	22 (559)	-	-
BEC0250*Y7AMA	4	103 1/2 (2630)	22 (559)	22 (559)	22 (559)	22 (559)	-
BEC0285*Y7AMA	4	103 1/2 (2630)	22 (559)	22 (559)	22 (559)	22 (559)	-
BEC0360*Y7AMA	5	125 1/2 (3189)	22 (559)	22 (559)	22 (559)	22 (559)	22 (559)

Notes:
* = Electrical Code Designator (see Nomenclature details)
± = S/H (see Nomenclature details)

DIMENSIONAL DATA

A1 Dimensional Data For Electric Defrost

Model	No. of Fans	L	A	B	C	D	E
		Inches (mm)	Inches (mm)	Inches (mm)	Inches (mm)	Inches (mm)	Inches (mm)
BEC0050B±6EMA	1	31 1/2 (800)	22 (559)	-	-	-	-
BEC0075B±6EMA	2	53 1/2 (1359)	22 (559)	22 (559)	-	-	-
BEC0120B±6EMA	3	75 1/2 (1918)	22 (559)	22 (559)	22 (559)	-	-
BEC0135B±6EMA	3	75 1/2 (1918)	22 (559)	22 (559)	22 (559)	-	-
BEC0180B±6EMA	4	97 1/2 (1918)	22 (559)	22 (559)	22 (559)	22 (559)	-
BEC0255B±6EMA	5	119 1/2 (3035)	22 (559)	22 (559)	22 (559)	22 (559)	22 (559)
BEC0280B±6EMA	5	119 1/2 (3035)	22 (559)	22 (559)	22 (559)	22 (559)	22 (559)

A2L Dimensional Data For Electric Defrost

Model	No. of Fans	L	A	B	C	D	E
		Inches (mm)	Inches (mm)	Inches (mm)	Inches (mm)	Inches (mm)	Inches (mm)
BEC0050BY6EMA	1	37 1/2 (954)	22 (559)	-	-	-	-
BEC0075BY6EMA	2	59 1/2 (1513)	22 (559)	22 (559)	-	-	-
BEC0120BY6EMA	3	81 1/2 (2071)	22 (559)	22 (559)	22 (559)	-	-
BEC0135BY6EMA	3	81 1/2 (2071)	22 (559)	22 (559)	22 (559)	-	-
BEC0180BY6EMA	4	103 1/2 (2630)	22 (559)	22 (559)	22 (559)	22 (559)	-
BEC0255BY6EMA	5	125 1/2 (3189)	22 (559)	22 (559)	22 (559)	22 (559)	22 (559)
BEC0280BY6EMA	5	125 1/2 (3189)	22 (559)	22 (559)	22 (559)	22 (559)	22 (559)

Notes:

* = Electrical Code Designator (see Nomenclature details)
± = S/H (see Nomenclature details)

DOE Rated AWEF

AWEF DATA

Air Defrost

FPI	Model	Cooler							
		R-404A/ R-507A	R-448A/ R-449A	R-407A/ R-407F	R-407C	R-454A	R-454C	R-455A	CO_2 90 Bar
		AWEF	AWEF	AWEF	AWEF	AWEF	AWEF	AWEF	AWEF
7	BEC0065*±7AMA	9.0	9.0	9.0	9.0	9.0	9.0	9.0	9.0
7	BEC0095*±7AMA	-	9.0	9.0	9.0	9.0	9.0	9.0	9.0
7	BEC0130*±7AMA	9.0	9.0	9.0	9.0	9.0	9.0	9.0	9.0
7	BEC0175*±7AMA	9.0	9.0	9.0	9.0	9.0	9.0	9.0	9.0
7	BEC0200*±7AMA	9.0	9.0	9.0	9.0	9.0	9.0	9.0	9.0
7	BEC0225*±7AMA	9.0	9.0	9.0	9.0	9.0	9.0	9.0	9.0
7	BEC0250*±7AMA	9.0	9.0	9.0	9.0	9.0	9.0	9.0	9.0
7	BEC0285*±7AMA	9.0	9.0	9.0	9.0	9.0	9.0	9.0	9.0
7	BEC0360*±7AMA	9.0	9.0	9.0	9.0	9.0	9.0	9.0	9.0

Notes:
* = Electrical Code Designator (see Nomenclature details)
± = Refrigerant Designator (see Nomenclature details)
Revision for all Y models (A2L/HFC) is Rev A

DOE Rated AWEF

AWEF DATA

Electric Defrost

FPI	Model	Freezer							
		R-404A/ R-507A	R-448A/ R-449A	R-407A/ R-407F	R-407C	R-454A	R-454C	R-455A	CO_2 90 Bar
		AWEF	AWEF	AWEF	AWEF	AWEF	AWEF	AWEF	AWEF
6	BEC0050B±6EMA	3.96	3.99	3.99	3.98	3.98	3.97	3.98	3.97
6	BEC0075B±6EMA	4.00	4.04	4.04	4.02	4.03	4.01	4.02	4.02
6	BEC0120B±6EMA	4.05	4.12	4.11	4.09	4.10	4.06	4.09	4.07
6	BEC0135B±6EMA	4.07	4.15	4.14	4.12	4.13	4.09	4.12	4.09
6	BEC0180B±6EMA	4.12	4.15	4.15	4.15	4.15	4.15	4.15	4.14
6	BEC0255B±6EMA	4.15	4.15	4.15	4.15	4.15	4.15	4.15	4.15
6	BEC0280B±6EMA	4.15	4.15	4.15	4.15	4.15	4.15	4.15	4.15

FPI	Model	Cooler							
		R-404A/ R-507A	R-448A/ R-449A	R-407A/ R-407F	R-407C	R-454A	R-454C	R-455A	CO_2 90 Bar
		AWEF	AWEF	AWEF	AWEF	AWEF	AWEF	AWEF	AWEF
6	BEC0050B±6EMA	-	9.0	9.0	9.0	9.0	9.0	9.0	9.0
6	BEC0075B±6EMA	-	9.0	9.0	9.0	9.0	9.0	9.0	9.0
6	BEC0120B±6EMA	9.0	9.0	9.0	9.0	9.0	9.0	9.0	9.0
6	BEC0135B±6EMA	9.0	9.0	9.0	9.0	9.0	9.0	9.0	9.0
6	BEC0180B±6EMA	9.0	9.0	9.0	9.0	9.0	9.0	9.0	9.0
6	BEC0255B±6EMA	9.0	9.0	9.0	9.0	9.0	9.0	9.0	9.0
6	BEC0280B±6EMA	9.0	9.0	9.0	9.0	9.0	9.0	9.0	9.0

Notes:
* = Electrical Code Designator (see Nomenclature details)
± = Refrigerant Designator (see Nomenclature details)

REPLACEMENT PARTS

Cabinet Components

Part #	Description	No. of Fans
40420101	Drain Pan - Stucco	1
40420201	Drain Pan - Stucco	2
40420301	Drain Pan - Stucco	3
40420401	Drain Pan - Stucco	4
40420501	Drain Pan - Stucco	5

Electrical Components

Part #	Description
22597101	Terminal Board - Air Defrost
22597701	Terminal Board - Electric Defrost
22521901	2SP RELAY 24V
22532001	2SP RELAY 120V
22505201	2SP RELAY 240V
4267W	Defrost Termination / Fan Delay Thermostat

Motor/Fan Blade/Fan Guards

Part #	Description
25326801S	Motor 115/1/60 - 2 Speed EC
25326901S	Motor 208-230/1/60 - 2 Speed EC
5110E	Fan Blade
23106201	Fan Guard - Plastic
5055F	Fan Guard - Metal
41417501	Motor Mount Plate

Electric Components

Part #	Description	No. of Fans
4400S	Coil Heater	1
4401S	Coil Heater	2
4402S	Coil Heater - 4 Row Coil	3
4403S	Coil Heater - 5 Row Coil	3
4404S	Coil Heater	4
4405S	Coil Heater	5

REPLACEMENT PARTS

A2L Refrigeration Detection System

Part #	Description
A2L Refrigeration Detection System (RDS) Kit	
89937701	ASSY-A2L RDS FIELD INSTALL, CM/LVCM

Part #	Description
A2L Mitigation Sensor (Replacement Part)	
28915901S	A2L SENSOR REPLACEMENT PART
A2L Mitigation Controller (Replacement Part)	
28928001S	A2L CONTROL BOARD

Part #	Description
Control Power Transformer	
22529601	TRANSFORMER, 120V-24V 40 VA
22529602	TRANSFORMER, 208V/240V-24V 40 VA

Air Defrost

Model No.	Liquid Line Size	Suction Line Size	Safety Shut off Valve* (SSOV) Part #			Check Valve* (CSOV) Part #		
			R-454A	R-454C	R-455A	R-454A	R-454C	R-455A
BEC0065*Y7AMA	3/8	1-1/8	29338301	29338301	29338301	29308802	29308802	29308802
BEC0095*Y7AMA	3/8	1-1/8	29338301	29338301	29338301	29308802	29308802	29308802
BEC0130*Y7AMA	3/8	1-1/8	29338301	29338301	29338401	29308802	29308802	29308802
BEC0175*Y7AMA	3/8	1-1/8	29338401	29338401	29338401	29308802	29308802	29308803
BEC0200*Y7AMA	3/8	1-1/8	29338401	29338401	29338401	29308803	29308802	29308803
BEC0225*Y7AMA	3/8	1-1/8	29338401	29338401	29338401	29308803	29308803	29308803
BEC0250*Y7AMA	3/8	1-1/8	29338401	29338401	29338601	29308803	29308803	29308803
BEC0285*Y7AMA	3/8	1-1/8	29338601	29338401	29338601	29308803	29308803	29308803
BEC0360*Y7AMA	3/8	1-1/8	29338601	29338601	29338601	29308803	29308803	29308804

Electric Defrost

Model No.	Liquid Line Size	Suction Line Size	Safety Shut off Valve* (SSOV) Part #			Check Valve* (CSOV) Part #		
			R-454A	R-454C	R-455A	R-454A	R-454C	R-455A
BEC0050BY6EMA	3/8	1-3/8	29338301	29338301	29338301	29308802	29308802	29308802
BEC0075BY6EMA	3/8	1-3/8	29338301	29338301	29338301	29308802	29308802	29308802
BEC0120BY6EMA	3/8	1-3/8	29338301	29338301	29338401	29308803	29308803	29308803
BEC0135BY6EMA	3/8	1-3/8	29338401	29338401	29338401	29308803	29308803	29308803
BEC0180BY6EMA	3/8	1-3/8	29338401	29338401	29338401	29308803	29308803	29308803
BEC0255BY6EMA	3/8	1-3/8	29338401	29338401	29338401	29308804	29308804	29308804
BEC0280BY6EMA	3/8	1-3/8	29338401	29338401	29338601	29308804	29308804	29308804

* = Applicable for 1 unit cooler, 1 condensing unit system only

STANDARD NOZZLE SELECTION

Air Defrost

Medium Temperature (25°F SST)											
Model	No. of Fans	Distributor Tube (in.)		No. of Circuits	Nozzle Selections						
		OD	Length		R-404A/ R-507A	R-448A/ R-449A	R-407A/ R-407F	R-407C	R-454A	R-454C	R-455A
BEC0065*S7AMA	1	3/16	18	4	L - 1/3	L - 1/2	L - 1/3	L - 1/3	L-1/3	L-1/3	L-1/2
BEC0095*S7AMB	2	3/16	18	4	L - 1/2	L - 3/4	L - 1/2	L - 1/2	L-1/2	L-1/2	L-3/4
BEC0130*S7AMA	2	3/16	18	4	L - 3/4	L - 1	L - 3/4	L - 3/4	L-3/4	L-3/4	L-1
BEC0175*S7AMA	3	3/16	18	4	L - 3/4	L - 1 1/2	L - 1	L - 1	L-1	L-1	L-1-1/2
BEC0200*S7AMA	3	3/16	18	6	L - 1	L - 1 1/2	L - 1	L - 1	L-1-1/2	L-1	L-1-1/2
BEC0225*S7AMA	3	3/16	24	8	L - 1	L - 2	L - 1 1/2	L - 1 1/2	L-1-1/2	L-1-1/2	L-1-1/2
BEC0250*S7AMA	4	3/16	18	6	L - 1 1/2	L - 2	L - 1 1/2	L - 1 1/2	L-1-1/2	L-1-1/2	L-2
BEC0285*S7AMA	4	3/16	24	8	L - 1 1/2	L - 2 1/2	L - 1 1/2	L - 1 1/2	L-1-1/2	L-1-1/2	L-2
BEC0360*S7AMA	5	3/16	18	10	L - 2	L - 3	L - 2	L - 2	L-2	L-2	L-2-1/2

Air Defrost (CO_2 90 Bar)

Medium Temperature (25°F SST)					
Model	No. of Fans	Distributor Tube (in.)		No. of Circuits	Nozzle Selections
		OD	Length		CO_2 90 Bar
BEC0065^H7AMA	1	3/16	18	2	L-1/4
BEC0095^H7AMA	2	3/16	18	4	L-1/4
BEC0130^H7AMA	2	3/16	18	6	L-1/3
BEC0175^H7AMA	3	3/16	18	2	L-1/2
BEC0200^H7AMA	3	3/16	18	2	L-1/2
BEC0225^H7AMA	3	3/16	18	6	L-3/4
BEC0250^H7AMA	4	3/16	18	4	L-3/4
BEC0285^H7AMA	4	3/16	18	6	L-1
BEC0360^H7AMA	5	3/16	18	6	L-1

Notes:
* = Electrical Code Designator (see Nomenclature details)

STANDARD NOZZLE SELECTION

Electric Defrost

Low Temperature (-20°F SST)											
Model	No. of Fans	Distributor Tube (in.)		No. of Circuits	Nozzle Selections						
		OD	Length		R-404A/ R-507A	R-448A/ R-449A	R-407A/ R-407F	R-407C	R-454A	R-454C	R-455A
BEC0050BS6EMA	1	3/16	18	4	L - 1/2	L - 1	L - 3/4	L - 1/2	L - 3/4	L - 3/4	L - 3/4
BEC0075BS6EMA	2	3/16	18	4	L - 3/4	L - 1 1/2	L - 1	L - 1	L - 1	L - 3/4	L - 1
BEC0120BS6EMA	3	3/16	18	6	L - 1 1/2	L - 2	L - 1 1/2	L - 1 1/2	L - 1 1/2	L - 1 1/2	L - 1 1/2
BEC0135BS6EMA	3	3/16	24	8	L - 2	L - 2 1/2	L - 1 1/2	L - 1 1/2	L - 1 1/2	L - 1 1/2	L - 2
BEC0180BS6EMA	4	3/16	18	10	L - 2	L - 4	L - 2 1/2	L - 2	L - 2	L - 2	L - 2 1/2
BEC0255BS6EMA	5	3/16	18	10	L - 2 1/2	L - 4	L - 3	L - 3	L - 2 1/2	L - 2 1/2	L - 2 1/2
BEC0280BS6EMA	5	3/16	18	10	L - 2 1/2	L - 4	L - 3	L - 3	L - 2 1/2	L - 2 1/2	L - 3

Electric Defrost (CO_2 90 Bar)

Low Temperature (-20°F SST)					
Model	No. of Fans	Distributor Tube (in.)		No. of Circuits	Nozzle Selections
		OD	Length		CO_2 90 Bar
BEC0050BH6EMA	1	3/16	18	2	L-1/3
BEC0075BH6EMA	2	3/16	18	2	L-1/2
BEC0120BH6EMA	3	3/16	18	2	L-3/4
BEC0135BH6EMA	3	3/16	18	4	L-1
BEC0180BH6EMA	4	3/16	18	6	L-1
BEC0255BH6EMA	5	3/16	18	4	L-1-1/2
BEC0280BH6EMA	5	3/16	24	10	L-1-1/2

NOTES

NOTES

NOTES

NOTES



2175 West Park Place Blvd.
Stone Mountain, GA 30087
Phone: 800.537.7775 · Fax: 770.465.5900
heatcraftrpd.com

Since product improvement is a continuing effort, we reserve the right to make changes in specifications without notice.

BN-CM-0826 | Version 014

©2026 Heatcraft Refrigeration Products LLC