ENGINEERING
TOMORROW

Application guidelines

Danfoss scrolls, **H/DCJ series with multi refrigerants** Residential and light commercial

R410A, R454B



http://cc.danfoss.com

General Information 4

PRODUCT INFORMATION 5

Features 5

Compressor model designation 6
Nomenclature 6

Technical specifications 7
50-60 Hz data 7

Dimensions 9
HRH029/32/34/38 evolution A 9
HRH044/051/054 evolution A 10
HLH061/068,HLJ072/75/83 evolution A 11
HRH051/054 -HLH061/068 -HLJ072/75/83 evolution A 12
DCJ091/106/121 evolution A 13
HRH051/054 evolution B 14
HLH061/068,HLJ072/75/83 evolution B 15
HRH051/054- HLH061/068 -HLJ072/75/83 evolution B 16
DCJ091/106/121 evolution B 17
H series 18
DCJ series 19

Electrical data, connections and wiring 20
Motor voltage 20
Wiring connections 20
Three phase electrical characteristics 21
Single phase electrical characteristics 22
IP rating 22
LRA (Locked Rotor Amp) 22
MCC (Maximum Continuous Current) 22
Max Oper. A (Max operating current) 22
Winding resistance 22
Motor protection 23
Phase sequence and reverse rotation protection 23
Electrical connections 23
Nominal capacitor value and relays 23

Approvals and certifications 24
Approvals and certificates 24
Pressure equipment directive 2014/68/EU 24
Low voltage directive 2014/35/EU 24
Machines directive 2006/42/EC 24
Internal free volume 24

Operating conditions 25
Refrigerant and lubricants 25

SYSTEM DESIGN 26

Design piping 26
General requirements 26
Tandem requirements 26

Design compressor mounting 28
General requirements 28
Single requirements 28
Tandem requirements 28

Manage sound and vibration 29
Compressor sound radiation 29
Mechanical vibrations 30
Gas pulsation 30

Manage operating envelope 31
Requirement 31
R410A map (DGT135°C) 31
R454B map (DGT135°C) 32
HLH-HLJ R410A (DGT135°C) map 33
HLH-HLJ R454B (DGT150°C) map 33
DCJ R410A (DGT135°C) map 33
DCJ R454B (DGT150°C) map 34
High and low pressure protection 35
System evaluation 35
Test, criteria and solutions 35

Manage superheat 36
Requirement 36
System evaluation 36
Test, criteria and solutions 37

Manage off cycle migration 38
Requirement 38
Evaluate the risk 38
Test, criteria and solutions 39
On/off cycling (cycle rate limit) 39

Provide power supply and electrical protection 40
Wiring information 40

Control logic 41
Safety control logic requirements 41
Cycle rate limit requirements 41
Oil management logic recommendations 41
Defrost logic recommendations 42
Pump-down logic recommendations 42

Reduce moisture in the system 43
Requirements 43
Solutions 43

INTEGRATION INTO SYSTEM 44

Assembly line procedure 44
Compressor storage 44
Compressor holding charge 44
Handling 44
Piping assembly 45
System pressure test and leak detection 45
Vacuum evacuation and moisture removal 46
Refrigerant charging 46
Dielectric strength and insulation resistance tests 46

Commissioning 47
Preliminary check 47
Initial start-up 47
System monitoring 47
Oil level checking and top-up 47

Dismantle and disposal 48

ORDERING INFORMATION 49

Ordering information and packaging 49
Packaging 49
Packaging details 49
Compressor code numbers 50

Spare parts & accessories 51

Danfoss scroll compressors are designed and manufactured according to the state of the art and to valid European and US regulations. Particular emphasis has been placed on safety and reliability. Related instructions are highlighted with the following icons:

 This icon indicates instructions to avoid safety risk.

 This icon indicates instructions to avoid reliability risk.

You are strongly advised to follow these instructions. For any deviation from the guidelines, please contact Danfoss Technical Support.

Danfoss H and DCJ series scroll compressors are manufactured using the most advanced machining, assembly, and process control techniques. In design of both the compressor and the factory, very high standards of reliability and process control were first priority. The result is a highly efficient product with the highest reliability obtainable, and a low sound level.

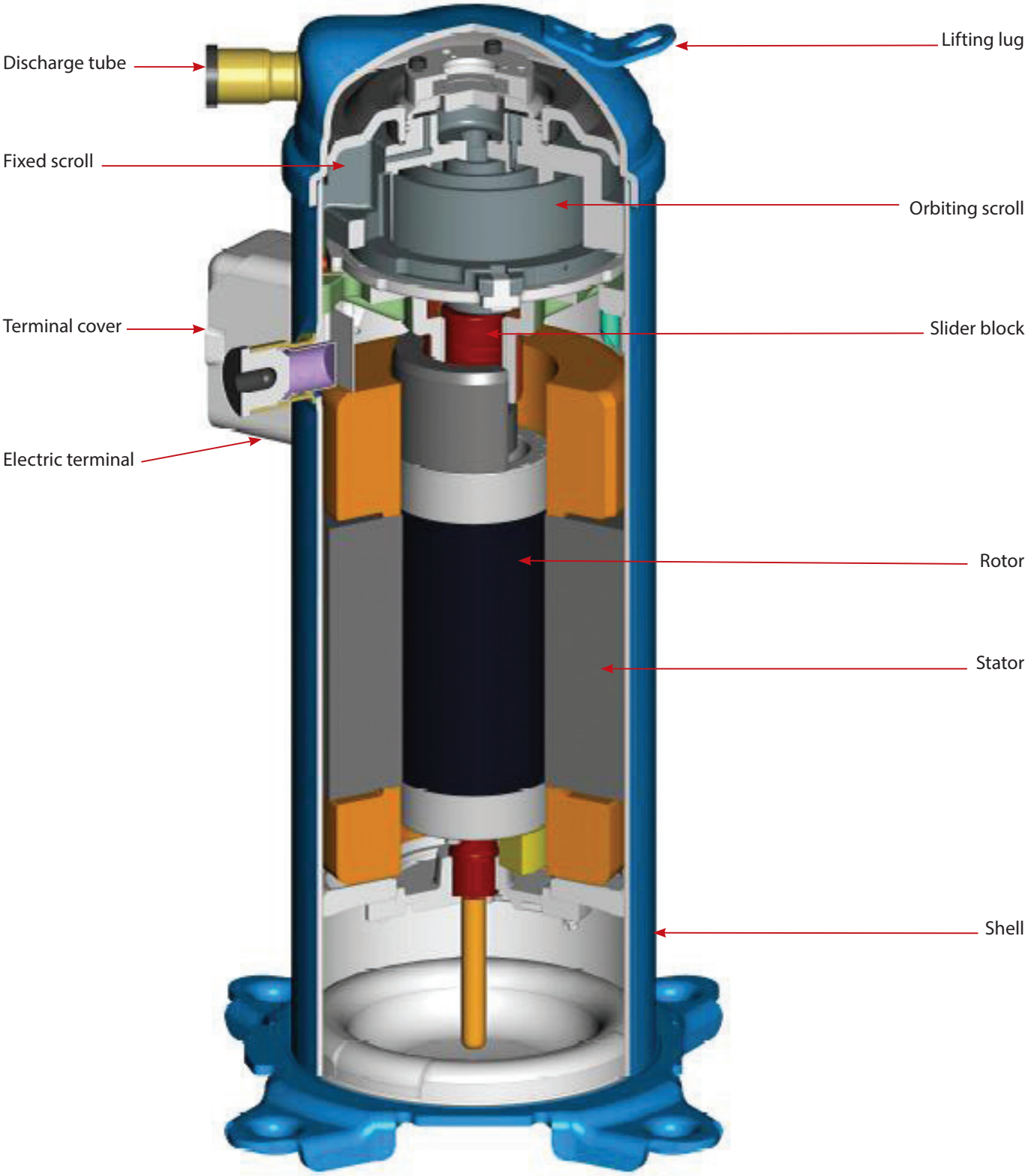

Compressor model designation

Danfoss H and DCJ series scroll compressor for R410A, R454B is available as single compressor and can be assembled in tandem combinations. The example below presents the compressor nomenclature which equals the technical reference as shown on the compressor nameplate. Code numbers for ordering are listed section “Ordering information and packaging”.

Nomenclature

Type	Size	Motor	Features	Evolution
HRH	032	U1L	P6	B

Application
H: high temperature / air conditioning

Family
C: commercial scroll
R: residential scroll
L: light commercial scroll

Refrigerant & lubricant
H: R410A/R454B, POE lubricant
J: R410A/R454B, POE lubricant

Nominal capacity
In thousand Btu/h at 60 Hz, ARI conditions

Model variation
T: design optimized for 7.2/54.4°C
U: design optimized for 7.2/37.8°C

Index
A: Not CE Marked
B: CE Marked

Other features

	Oil sight glass	Oil equalisation	Oil drain	LP gauge port	Gas equalisation port
6	None	None	None	None	None
8	None	Brazed	None	None	Brazed

Tubing and electrical connections
P: brazed connections, spade terminals
C: brazed connections, screw terminals



Motor protection
L: internal motor protection

Motor voltage code
1: 208-230V/1~/60 Hz
2: 200-220V/3~/50Hz & 208-230V/3~/60 Hz
4: 380-415V/3~/50 Hz & 460V/3~/60 Hz
7: 575V/ 3~/60 Hz

Type	Size	Motor	Features	Evolution
DCJ	091	T4L	C6	B

DCJ
Commercial scroll, POE lubricant, for R410A/R454B

Nominal capacity
In thousand Btu/h at 60 Hz, ARI conditions

Model variation
T: design optimized for 7.2/54.4°C

Motor voltage code
2: 200-220V/3~/50Hz & 208-230V/3~/60 Hz
4: 380-415V/3~/50 Hz & 460V/3~/60 Hz
7: 575V/ 3~/60 Hz

Index
A: Not CE Marked
B: CE Marked

Other features

	Oil sight glass	Oil equalisation	Oil drain	LP gauge port	Gas equalisation port
6	None	None	None	None	None
8	None	Brazed	None	None	Brazed

Tubing and electrical connections
C: brazed connections, screw terminals



Motor protection
L: internal motor protection

Technical specifications

50-60 Hz data

R410A

Model			Nominal tons 60 Hz	Nominal cooling capacity		Power input	COP	E.E.R	Swept volume	Displace-ment	"Oil charge [evolution A /B]"	"Net weight [evolu-tion A /B]"
			TR	W	Btu/h	W	W/W	Btu/h/W	cm3/rev	m3/h	dm3	kg
R410A	50Hz	HRH029U4	2.4	5968	20362	2320	2.57	8.78	27.8	4.84	1.06	32
		HRH032U4	2.7	6599	22517	2404	2.74	9.37	30.6	5.33	1.06	32
		HRH034U4	2.8	7287	24865	2582	2.82	9.63	33.3	5.75	1.06	32
		HRH038U4	3.2	7976	27213	2897	2.75	9.40	36.5	6.36	1.06	32
		HRH044U4	3.7	9612	32797	3470	2.77	9.45	42.6	7.41	1.57	39
		HRH051U4	4.3	11387	38853	3777	3.01	10.29	49.3	8.58	1.57 / 1.73	41
		HRH054U4	4.5	11828	40359	4000	2.96	10.09	52.1	9.07	1.57 / 1.73	41
		HLH061T4	5.1	13174	44949	4374	3.01	10.28	57.8	10.1	1.57 / 1.73	41
		HLH068T4	5.7	14975	51094	4807	3.11	10.63	64.4	11.21	1.57 / 1.73	41
		HLJ072T4	6	15831	54014	5079	3.12	10.64	68	11.82	1.57 / 1.73	41
		HLJ075T4	6.3	16568	56532	5306	3.12	10.66	70.8	12.32	1.57 / 1.73	41
		HLJ083T4	6.9	18164	61974	5790	3.14	10.70	78.1	13.59	1.57 / 1.73	41
		DCJ091T4	7.5	19675	67130	6362	3.09	10.56	86.9	15.11	2.46 / 2.62	49
		DCJ106T4	9	22942	78279	7389	3.10	10.60	101.6	17.68	2.46 / 2.62	49
		DCJ121T4	10	26238	89526	8417	3.12	10.64	116.4	20.24	2.46 / 2.62	49
	60Hz	HRH029U4	2.4	8213	28024	3031	2.71	9.25	27.8	5.84	1.06	32
		HRH032U4	2.7	9078	30974	3213	2.83	9.64	30.6	6.43	1.06	32
		HRH034U4	2.8	9972	34025	3377	2.95	10.08	33.3	6.94	1.06	32
		HRH038U4	3.2	11001	37534	3694	2.98	10.16	36.5	7.67	1.06	32
		HRH044U4	3.7	13006	44376	4308	3.02	10.30	42.6	8.95	1.57	39
		HRH051U4	4.3	15174	51772	4837	3.14	10.70	49.3	10.36	1.57 / 1.73	41
		HRH054U4	4.5	15964	54470	5137	3.11	10.60	52.1	10.94	1.57 / 1.73	41
		HLH061T4	5.1	18134	61872	5725	3.17	10.81	57.8	12.13	1.57 / 1.73	41
		HLH068T4	5.7	20127	68672	6297	3.20	10.91	64.4	13.52	1.57 / 1.73	41
		HLJ072T4	6	21240	72471	6645	3.20	10.91	68	14.27	1.57 / 1.73	41
		HLJ075T4	6.3	22320	76157	6857	3.25	11.11	70.8	14.87	1.57 / 1.73	41
		HLJ083T4	6.9	24343	83058	7546	3.23	11.01	78.1	16.4	1.57 / 1.73	41
		DCJ091T4	7.5	27084	92411	8393	3.23	11.01	86.9	18.24	2.46 / 2.62	49
		DCJ106T4	9	31472	107382	9671	3.25	11.11	101.6	21.34	2.46 / 2.62	49
		DCJ121T4	10	35723	121886	11122	3.21	10.96	116.4	24.43	2.46 / 2.62	49

Displacement at nominal speed: 2900 rpm at 50 Hz, 3500 rpm at 60 Hz
Net weight with oil charge

TR = Ton of Refrigeration, Standard rating conditions:
For 50Hz: Evaporating temperature: 5°C (41°F), Condensing temperature: 50°C (122°F), Superheat: 10K (18°F), Subcooling: 0K (0°F)
For 60Hz: Evaporating temperature: 7.2°C (45°F), Condensing temperature: 54.4°C (130°F), Superheat: 11.1K (20°F), Subcooling: 8.3K (15°F)

EER: Energy Efficiency Ratio
COP: Coefficient of Performance
All performance data test after run-in 72hrs Subject to modification without prior notification.

Technical specifications

R454B

Model			Nominal tons 60 Hz	Nominal cooling capacity		Power input	COP	E.E.R	Swept volume	Displace-ment	"Oil charge [evolution A /B]"	"Net weight [evolu-tion A /B]"
			TR	W	Btu/h	W	W/W	Btu/h/W	cm3/rev	m3/h	dm3	kg
R454B	50Hz	HRH029U4	2.4	5828	19885	2186	2.67	9.10	27.8	4.84	1.06	32
		HRH032U4	2.7	6448	21999	2263	2.85	9.73	30.6	5.33	1.06	32
		HRH034U4	2.8	7116	24278	2423	2.94	10.02	33.3	5.75	1.06	32
		HRH038U4	3.2	7783	26555	2683	2.90	9.90	36.5	6.36	1.06	32
		HRH044U4	3.7	9016	30763	3145	2.87	9.79	42.6	7.41	1.57	39
		HRH051U4	4.3	10747	36670	3435	3.13	10.68	49.3	8.58	1.57 / 1.73	41
		HRH054U4	4.5	11176	38132	3607	3.10	10.58	52.1	9.07	1.57 / 1.73	41
		HLH061T4	5.1	12584	42936	4123	3.05	10.42	57.8	10.1	1.57 / 1.73	41
		HLH068T4	5.7	13989	47729	4450	3.14	10.73	64.4	11.21	1.57 / 1.73	41
		HLJ072T4	6	14842	50642	4710	3.15	10.75	68	11.82	1.57 / 1.73	41
		HLJ075T4	6.3	15494	52866	4975	3.11	10.63	70.8	12.32	1.57 / 1.73	41
		HLJ083T4	6.9	17031	58111	5531	3.08	10.51	78.1	13.59	1.57 / 1.73	41
		DCJ091T4	7.5	19135	65289	5907	3.24	11.05	86.9	15.11	2.46 / 2.62	49
		DCJ106T4	9	22326	76177	6916	3.23	11.02	101.6	17.68	2.46 / 2.62	49
		DCJ121T4	10	25235	86101	7729	3.27	11.14	116.4	20.24	2.46 / 2.62	49
	60Hz	HRH029U4	2.4	7935	27075	2858	2.78	9.48	27.8	5.84	1.06	32
		HRH032U4	2.7	8772	29929	3030	2.90	9.88	30.6	6.43	1.06	32
		HRH034U4	2.8	9633	32867	3179	3.03	10.34	33.3	6.94	1.06	32
		HRH038U4	3.2	10616	36223	3480	3.05	10.41	36.5	7.67	1.06	32
		HRH044U4	3.7	12273	41876	4163	2.95	10.06	42.6	8.95	1.57	39
		HRH051U4	4.3	14617	49873	4580	3.19	10.89	49.3	10.36	1.57 / 1.73	41
		HRH054U4	4.5	15199	51859	4794	3.17	10.82	52.1	10.94	1.57 / 1.73	41
		HLH061T4	5.1	17033	58116	5431	3.14	10.70	57.8	12.13	1.57 / 1.73	41
		HLH068T4	5.7	18929	64586	5900	3.21	10.95	64.4	13.52	1.57 / 1.73	41
		HLJ072T4	6	20177	68843	6238	3.23	11.04	68	14.27	1.57 / 1.73	41
		HLJ075T4	6.3	21147	72153	6510	3.25	11.08	70.8	14.87	1.57 / 1.73	41
		HLJ083T4	6.9	23258	79355	7220	3.22	10.99	78.1	16.4	1.57 / 1.73	41
		DCJ091T4	7.5	25888	88331	7787	3.32	11.35	86.9	18.24	2.46 / 2.62	49
		DCJ106T4	9	30190	103008	9179	3.29	11.23	101.6	21.34	2.46 / 2.62	49
		DCJ121T4	10	34176	116608	10233	3.34	11.40	116.4	24.43	2.46 / 2.62	49

HRH029/32/34/38 evolution A

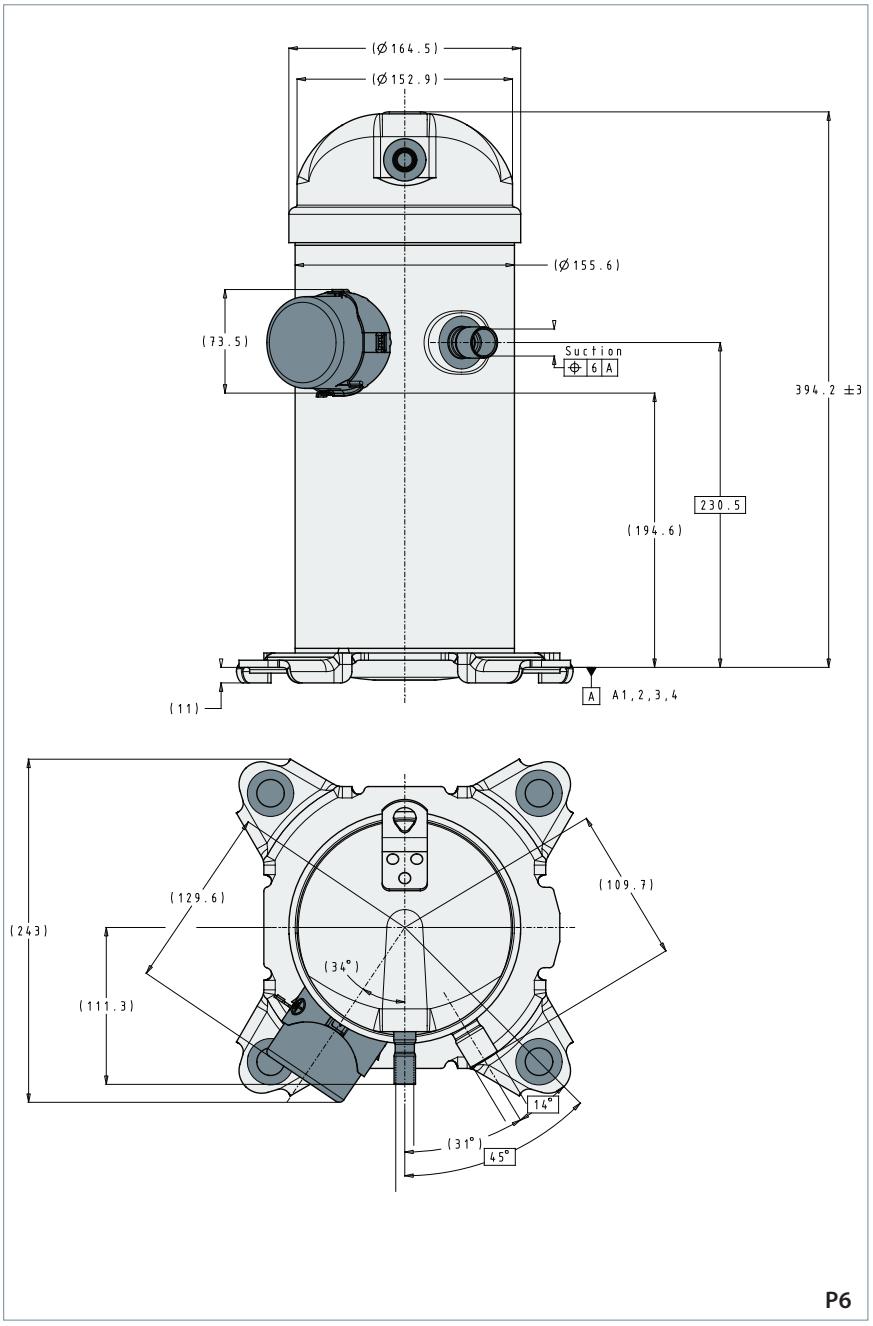

Terminal box

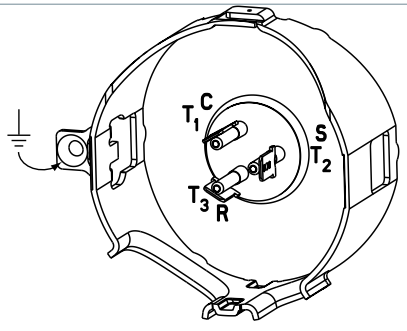

Quick connect spade terminals
P terminal box type

Mounting grommet

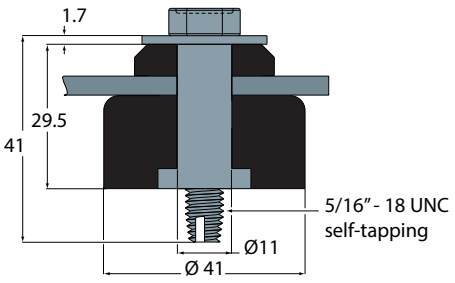

Recommended torque for mounting bolts:
11 Nm (±1 Nm)

Refer to section for ordering information

HRH044/051/054 evolution A

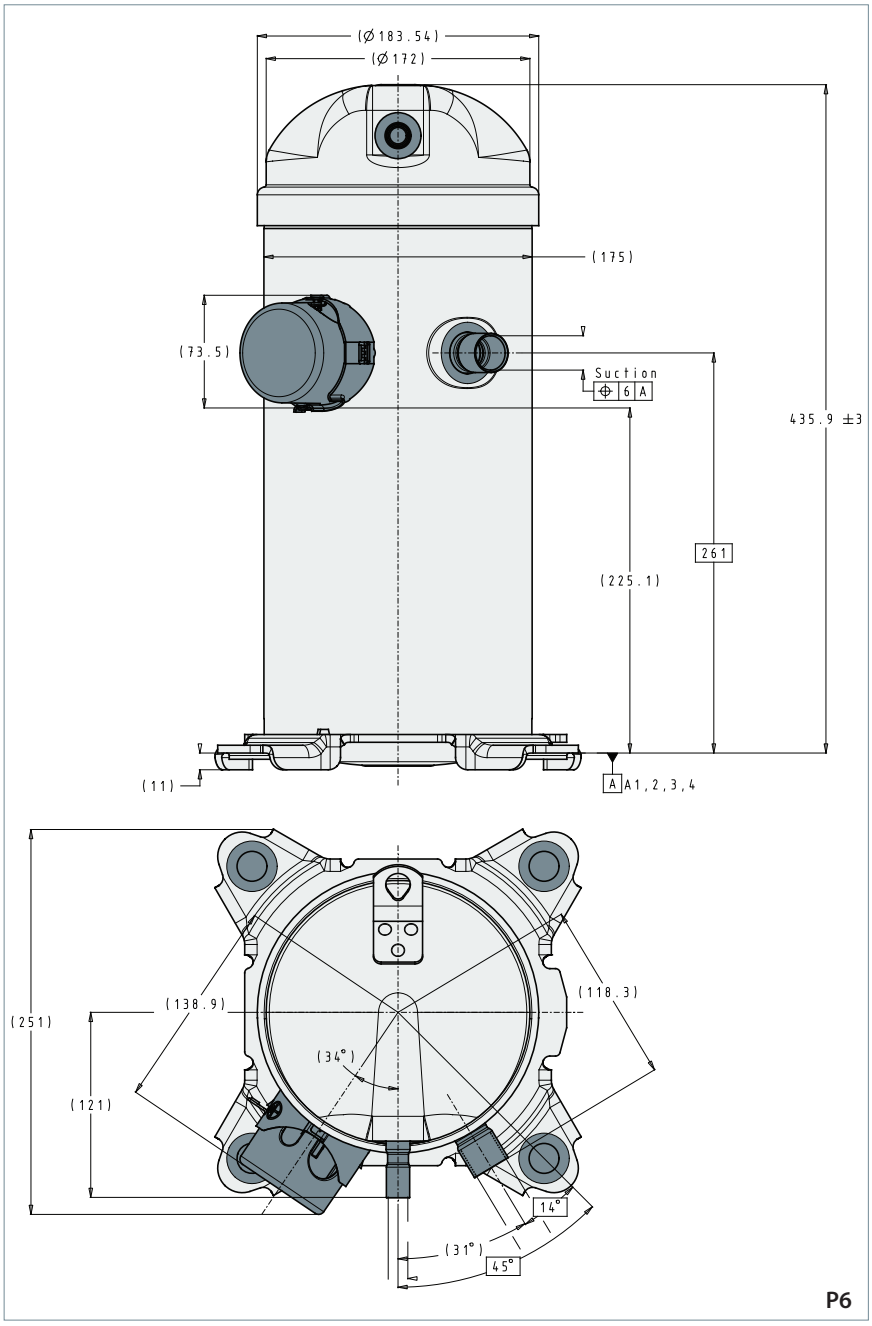

Terminal box

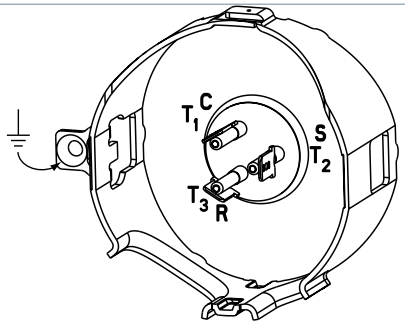

Quick connect spade terminals
P terminal box type

Mounting grommet

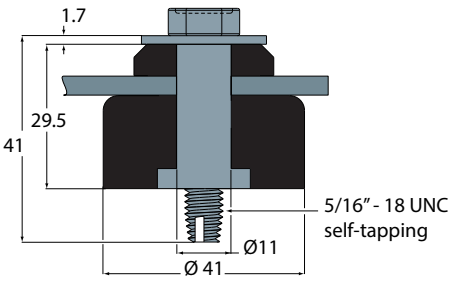

Recommended torque for mounting bolts:
11 Nm (±1 Nm)

Refer to section for ordering information

HLH061/068,HLJ072/75/83 evolution A

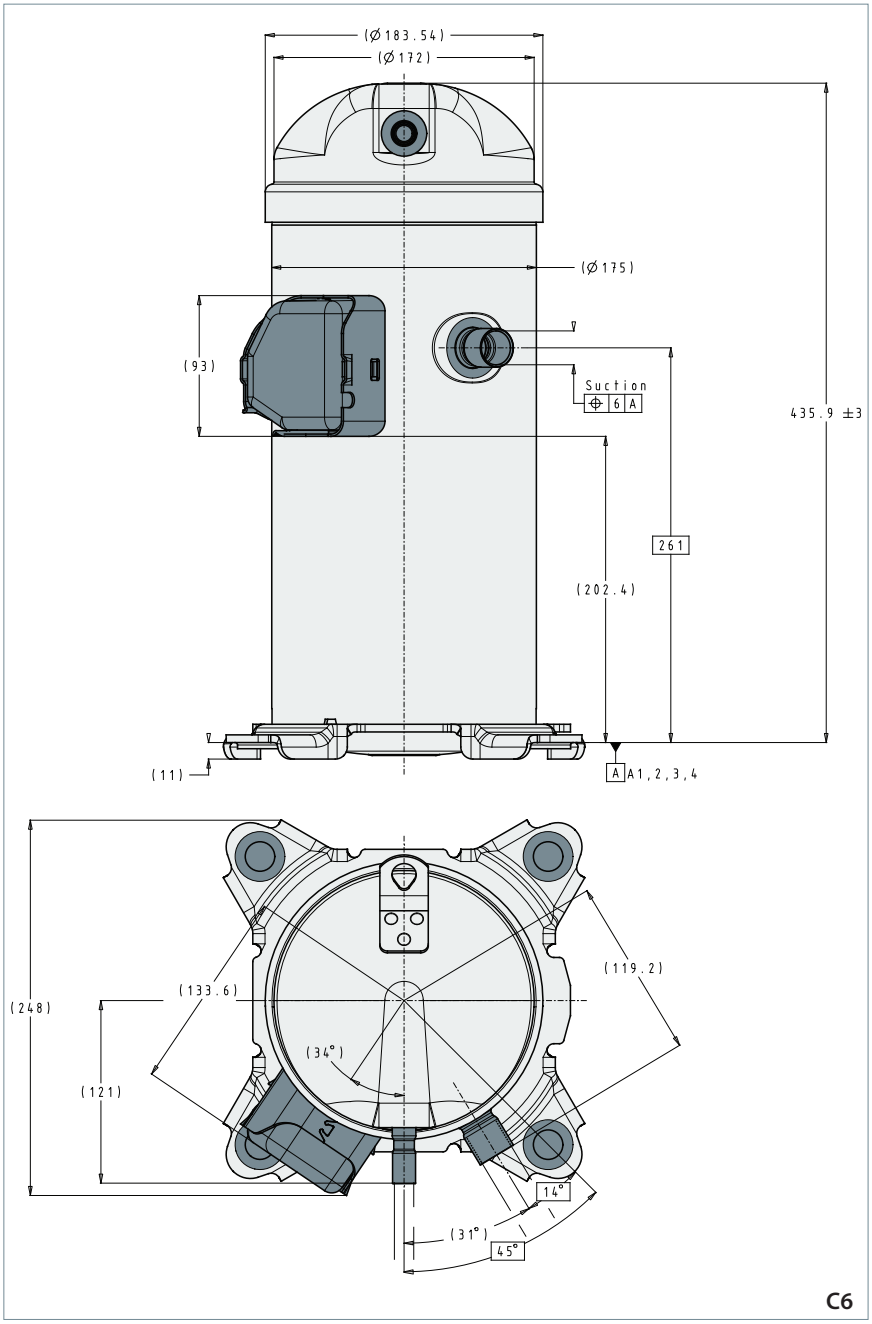

Terminal box

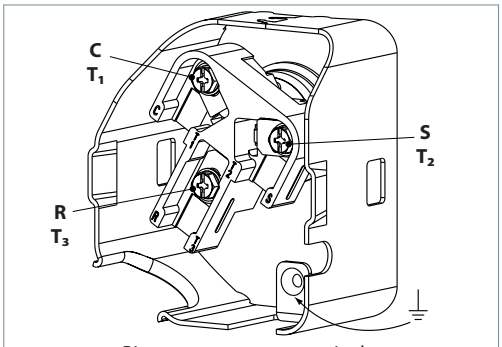

Ring connect screw terminals
C terminal box type

Mounting grommet

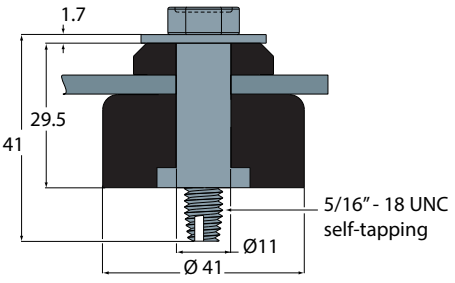

Recommended torque for mounting bolts:
11 Nm (±1 Nm)

Refer to section for ordering information

HRH051/054 -HLH061/068 -HLJ072/75/83 evolution A

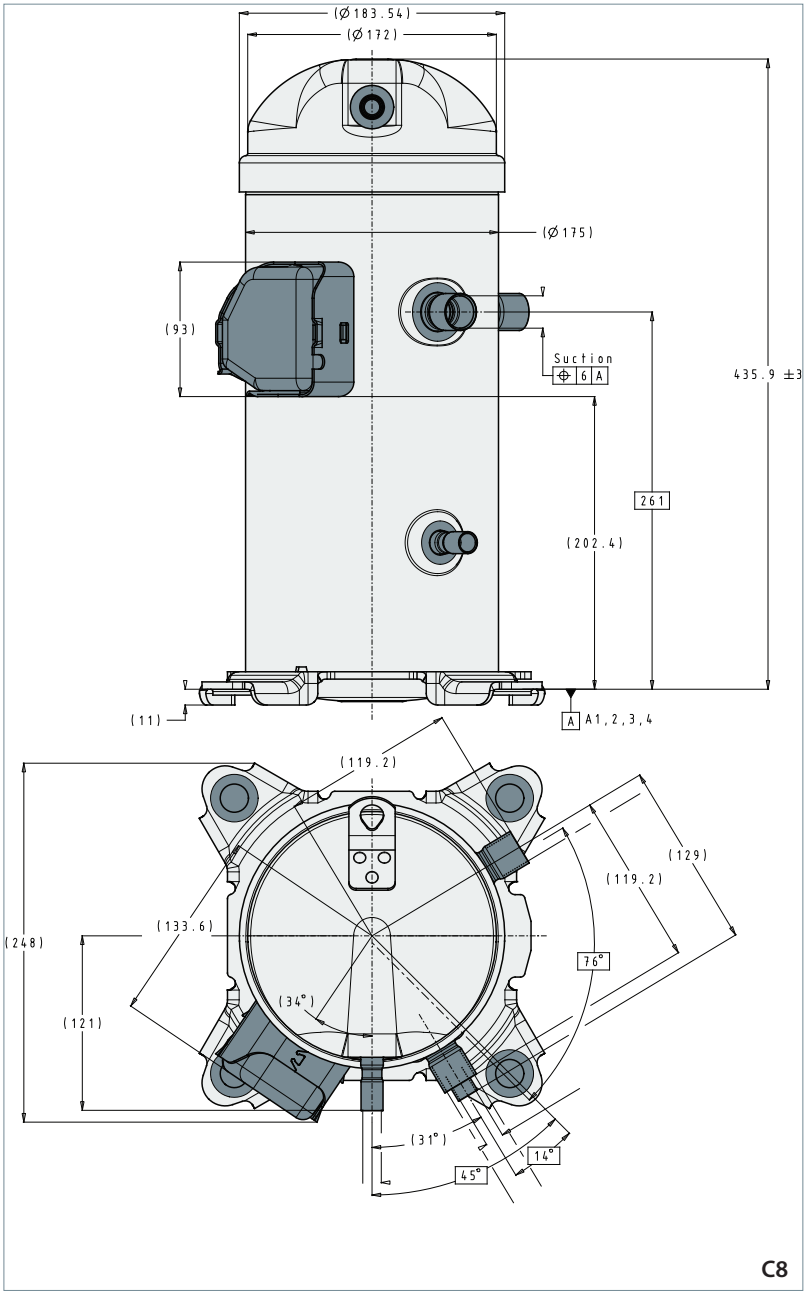

Terminal box

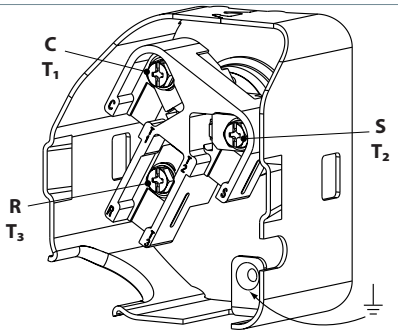

Ring connect screw terminals
C terminal box type

Mounting grommet

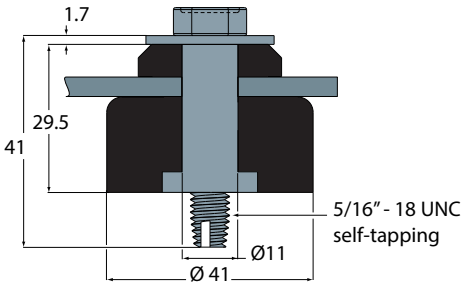

Recommended torque for mounting bolts:
11 Nm (±1 Nm)

Refer to section for ordering information

DCJ091/106/121 evolution A

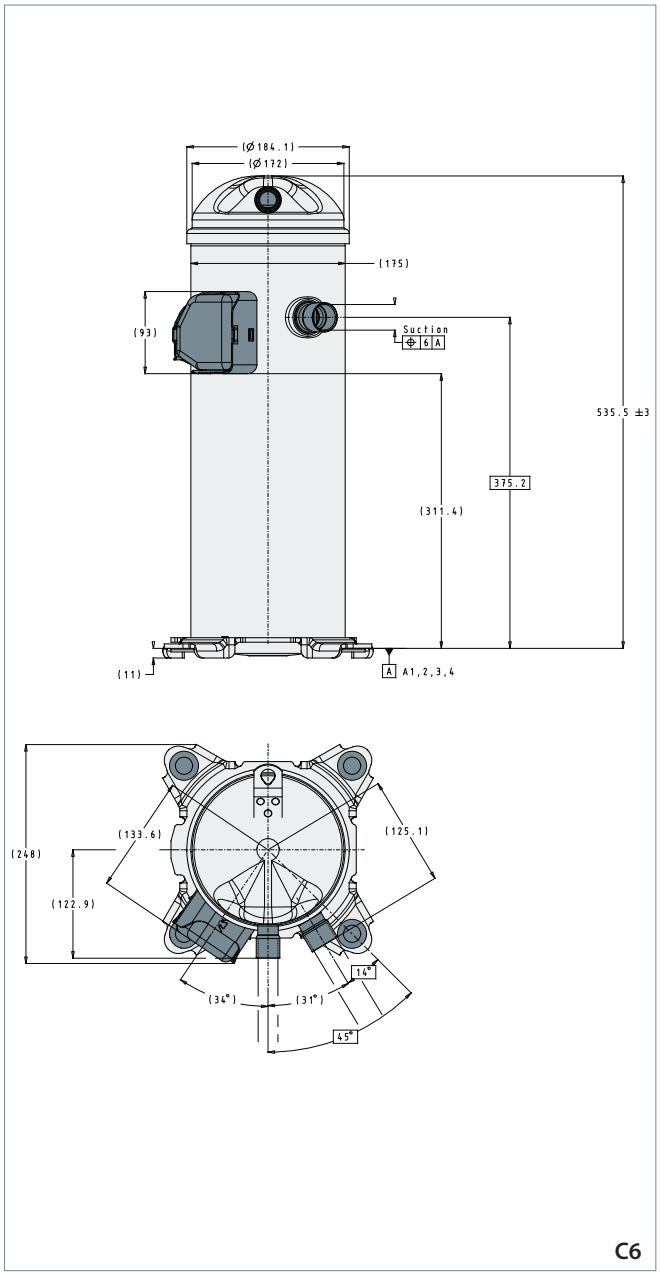

C6

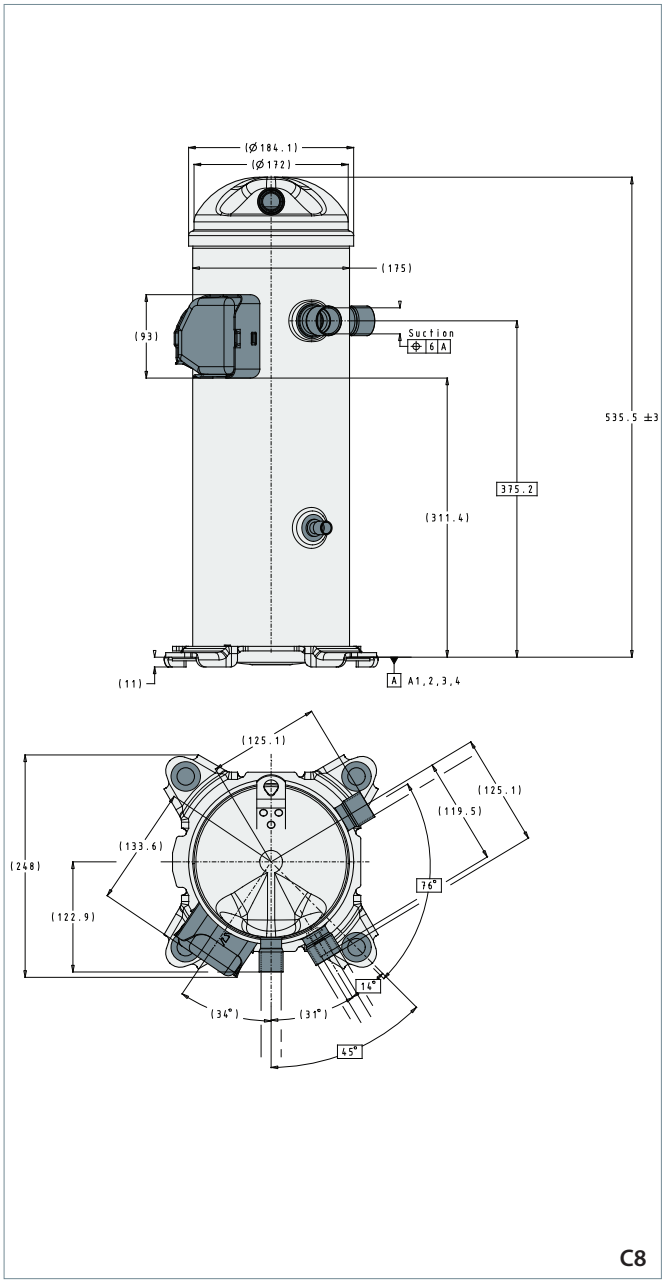

C8

Terminal box

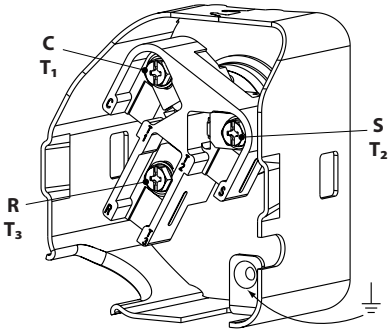

Ring connect screw terminals
C terminal box type

Mounting grommet

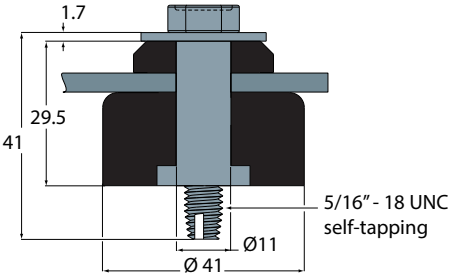

Recommended torque for mounting bolts:
11 Nm (±1 Nm)

Refer to section for ordering information

HRH051/054 evolution B

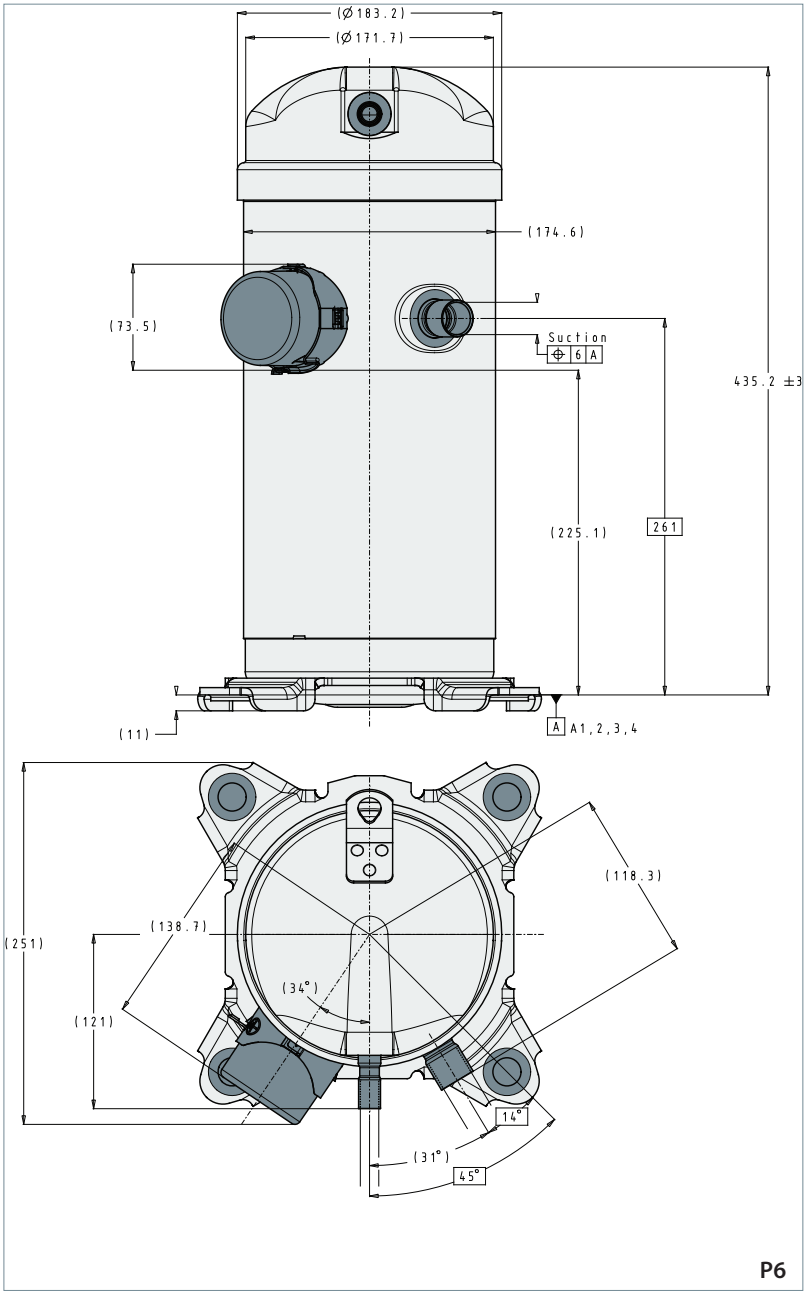

Terminal box

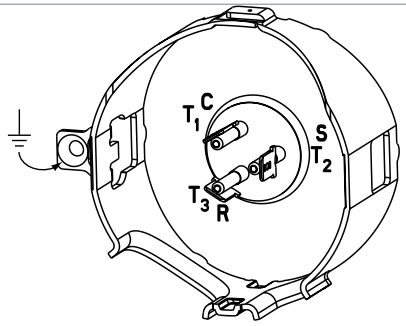

Quick connect spade terminals
P terminal box type

Mounting grommet

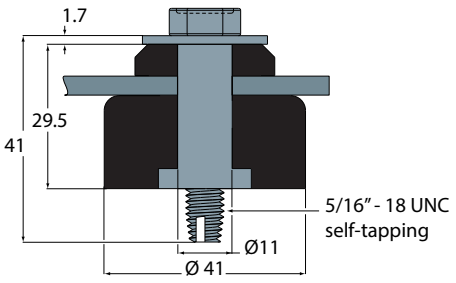

Recommended torque for mounting bolts:
11 Nm (±1 Nm)

Refer to section for ordering information

HLH061/068,HLJ072/75/83 evolution B

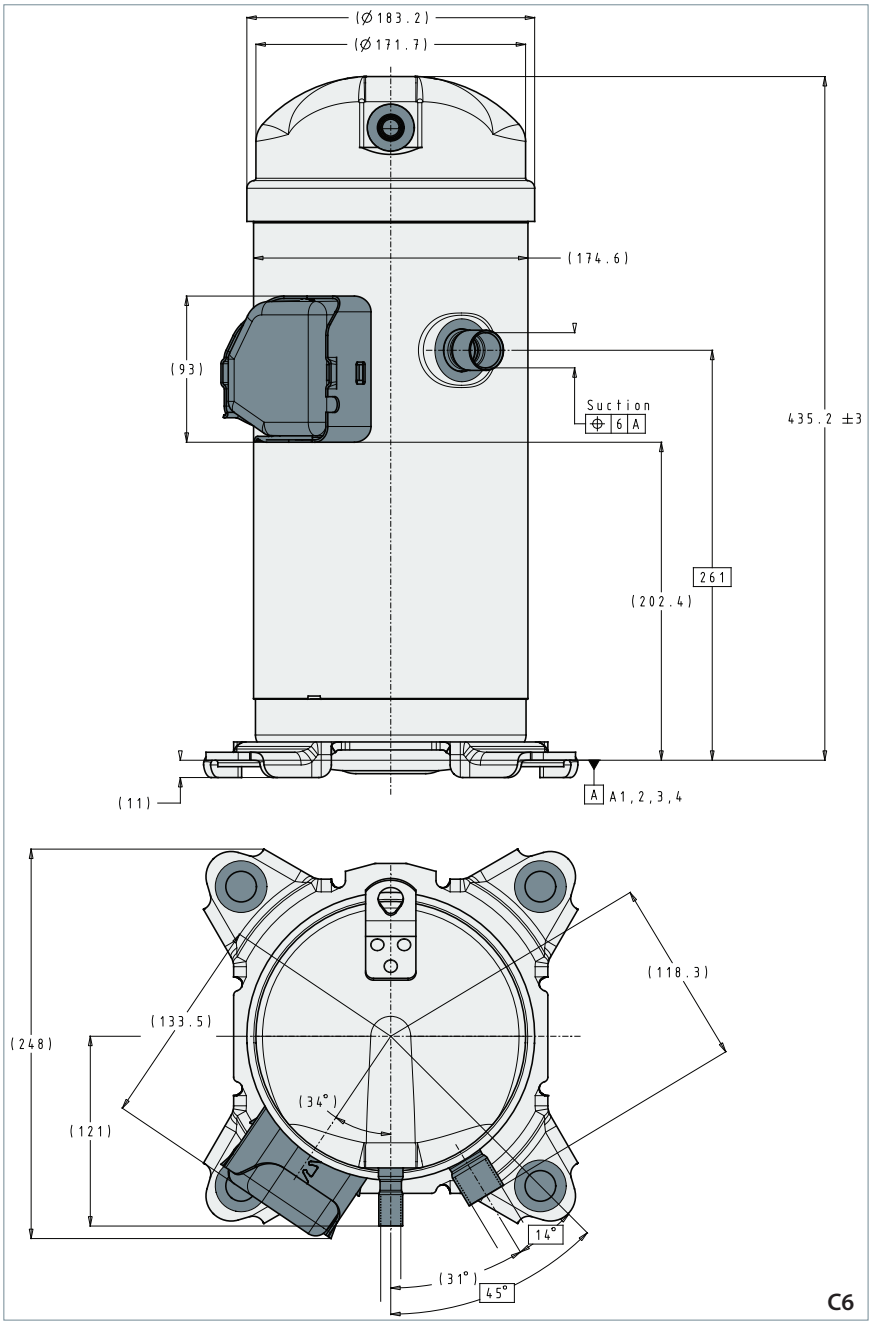

Terminal boxes

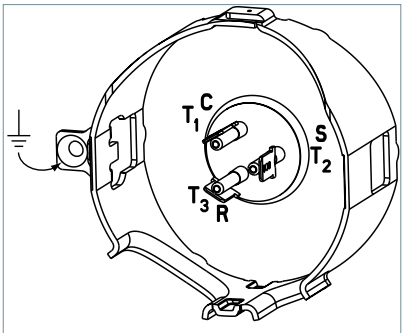

Quick connect spade terminals
P terminal box type

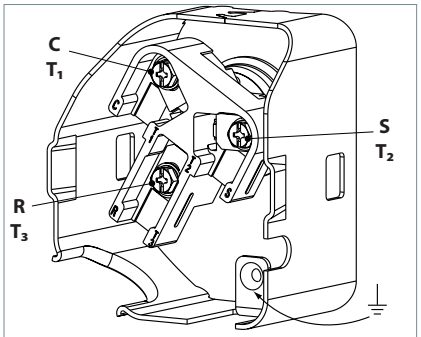

Ring connect screw terminals
C terminal box type

Mounting grommet

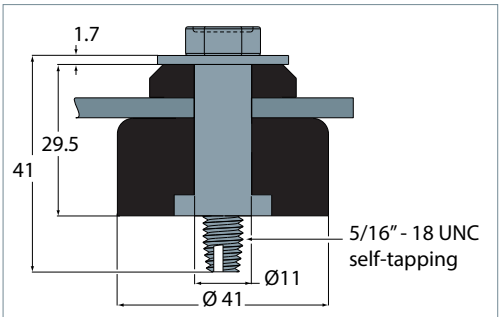

Recommended torque for mounting bolts:
11 Nm (±1 Nm)

Refer to section for ordering information

HRH051/054- HLH061/068 -HLJ072/75/83 evolution B

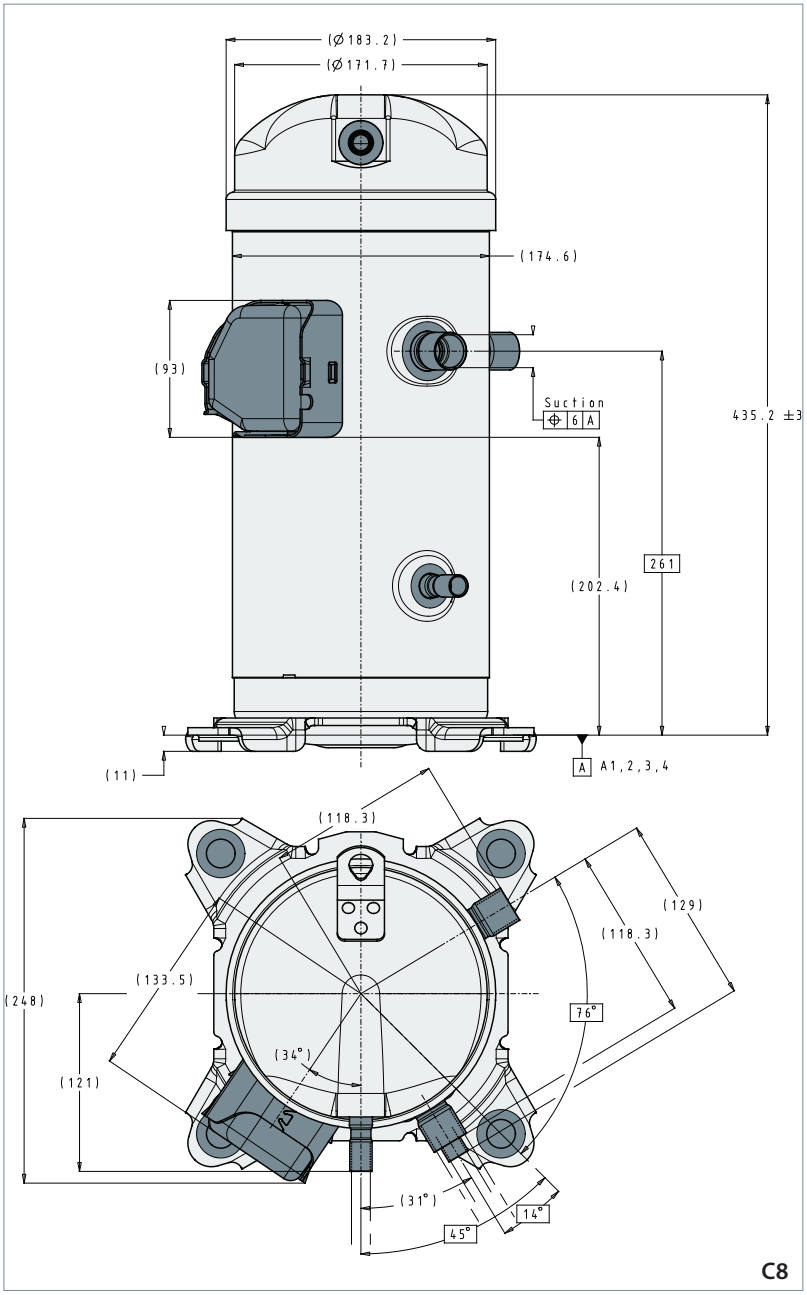

Terminal box

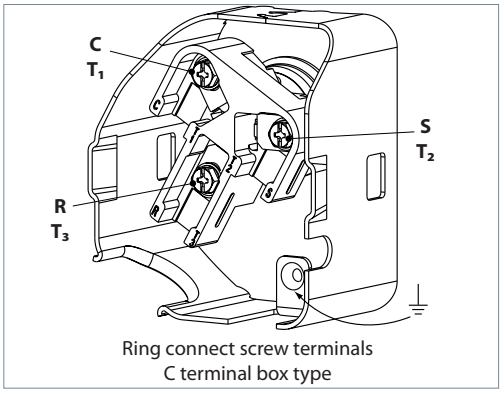

Ring connect screw terminals
C terminal box type

Mounting grommet

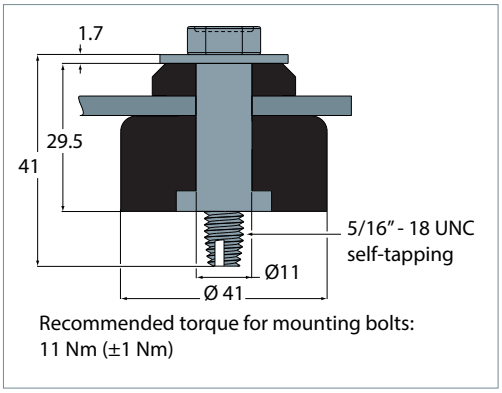

Recommended torque for mounting bolts:
11 Nm (±1 Nm)

Refer to section for ordering information

DCJ091/106/121 evolution B

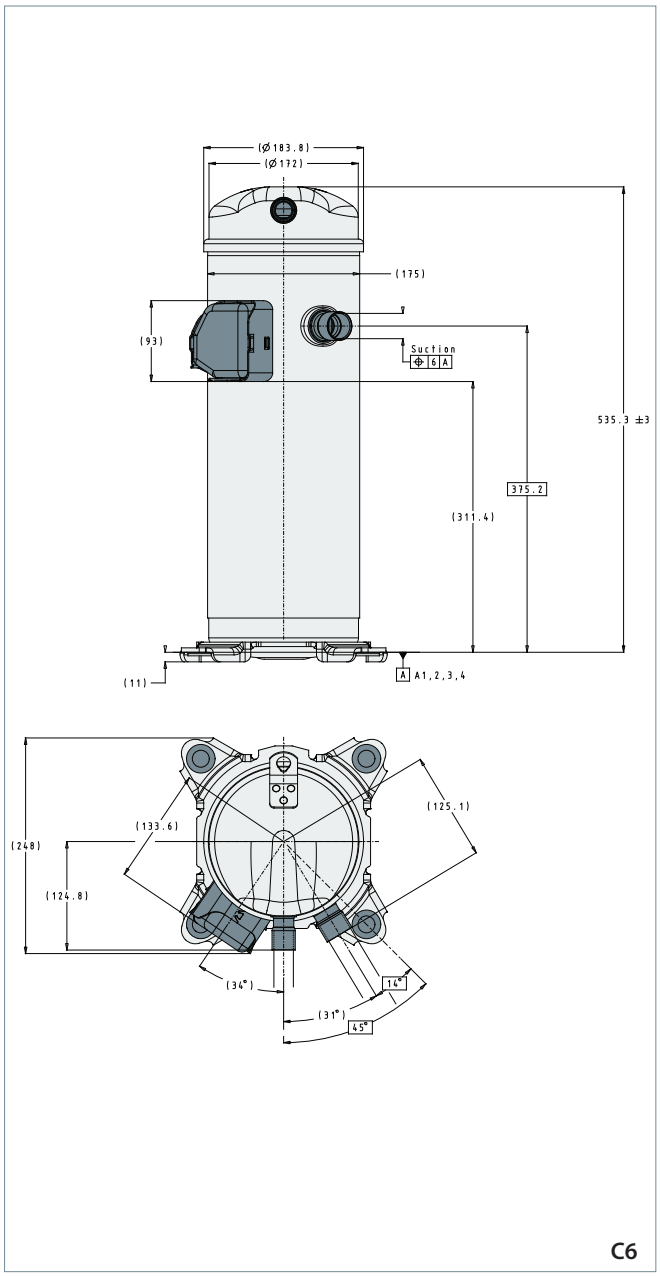

C6

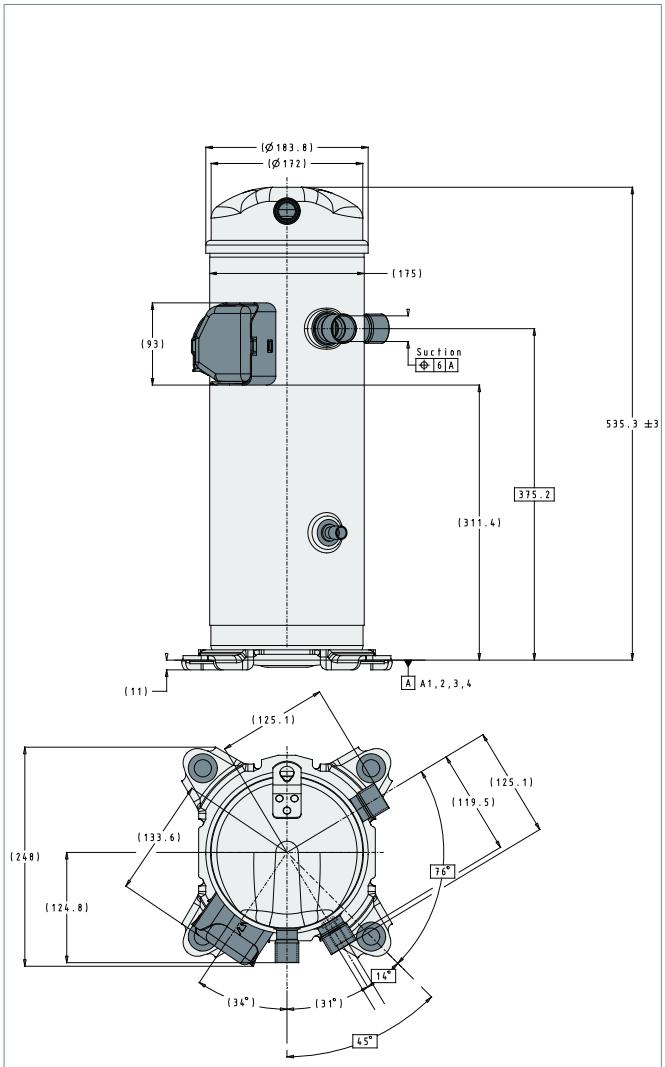

C8

Terminal box

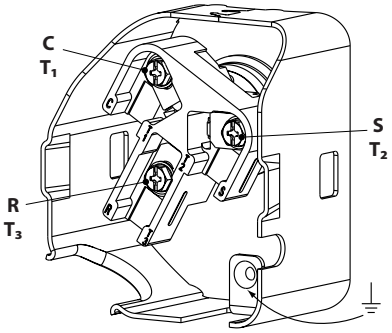

Ring connect screw terminals
C terminal box type

Mounting grommet

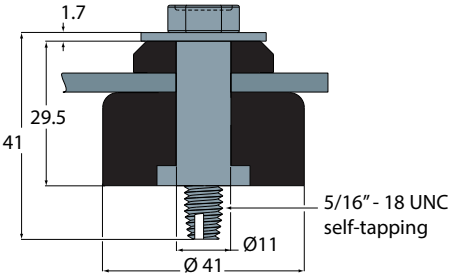

Recommended torque for mounting bolts:
11 Nm (±1 Nm)

Refer to section for ordering information

Dimensions

H series

compressor evolution “A”

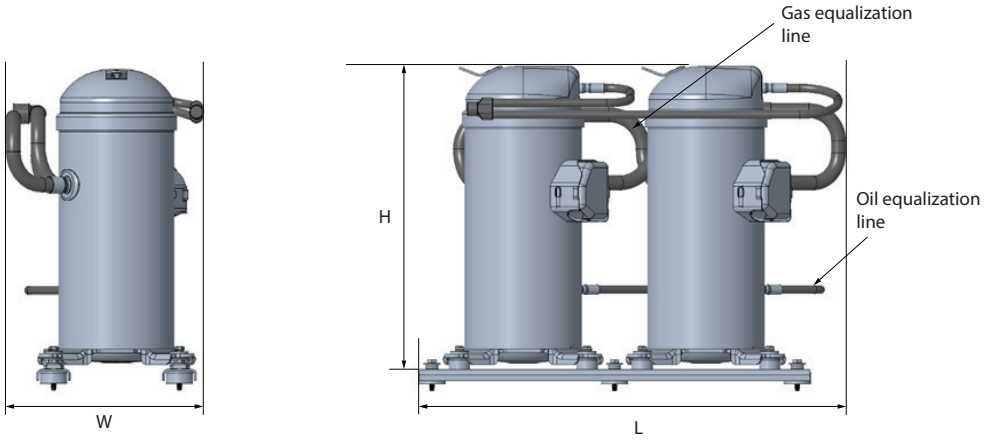

compressor evolution “B”

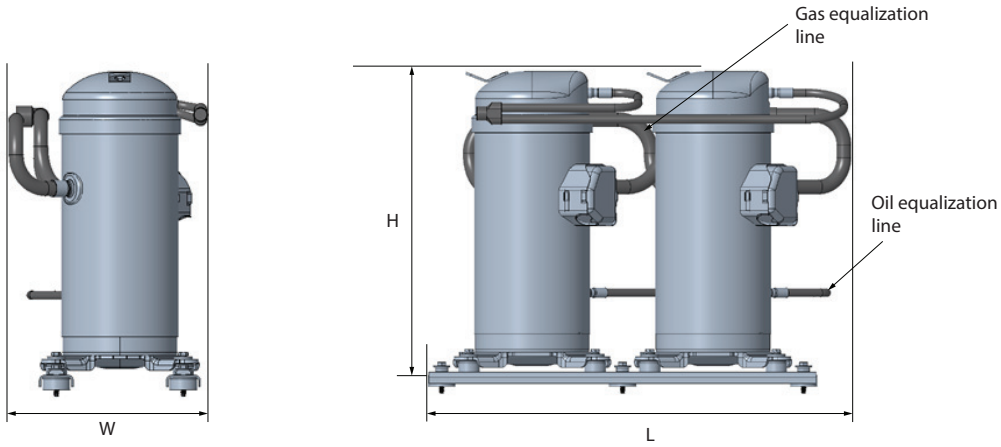

Tandem model	Composition	L(mm)	H(mm)	W(mm)	Outline drawing number	Comments
TLJ102E	HRH051-A+ HRH051-A	637	475	298	8590090	Not CE Marked
TLJ122E	HLH061-A+ HLH061-A	637	475	298	8590090	Not CE Marked
TLJ136E	HLH068-A+ HLH068-A	637	475	298	8590090	Not CE Marked
TLJ144E	HLJ072-A+ HLJ072-A	637	475	298	8590090	Not CE Marked
TLJ150E	HLJ075-A+ HLJ075-A	637	475	298	8590090	Not CE Marked
TLJ166E	HLJ083-A+ HLJ083-A	637	475	298	8590090	Not CE Marked
TLJ137U	HLJ083-A+ HRH054-A	637	475	298	8590090	Not CE Marked
TLJ151U	HLJ083-A + HLH068-A	637	475	298	8590090	Not CE Marked
TLJ155U	HLJ083-A + HLJ072-A	637	475	298	8590090	Not CE Marked
TLJ102E	HRH051-B+ HRH051-B	637	475	298	8590091	CE Marked
TLJ122E	HLH061-B+ HLH061-B	637	475	298	8590091	CE Marked
TLJ136E	HLH068-B+ HLH068-B	637	475	298	8590091	CE Marked
TLJ144E	HLJ072-B+ HLJ072-B	637	475	298	8590091	CE Marked
TLJ150E	HLJ075-B+ HLJ075-B	637	475	298	8590091	CE Marked
TLJ166E	HLJ083-B+ HLJ083-B	637	475	298	8590091	CE Marked
TLJ137U	HLJ083-B+ HRH054-B	637	475	298	8590091	CE Marked
TLJ151U	HLJ083-B + HLH068-B	637	475	298	8590091	CE Marked
TLJ155U	HLJ083-B + HLJ072-B	637	475	298	8590091	CE Marked

DCJ series

compressor evolution “A”

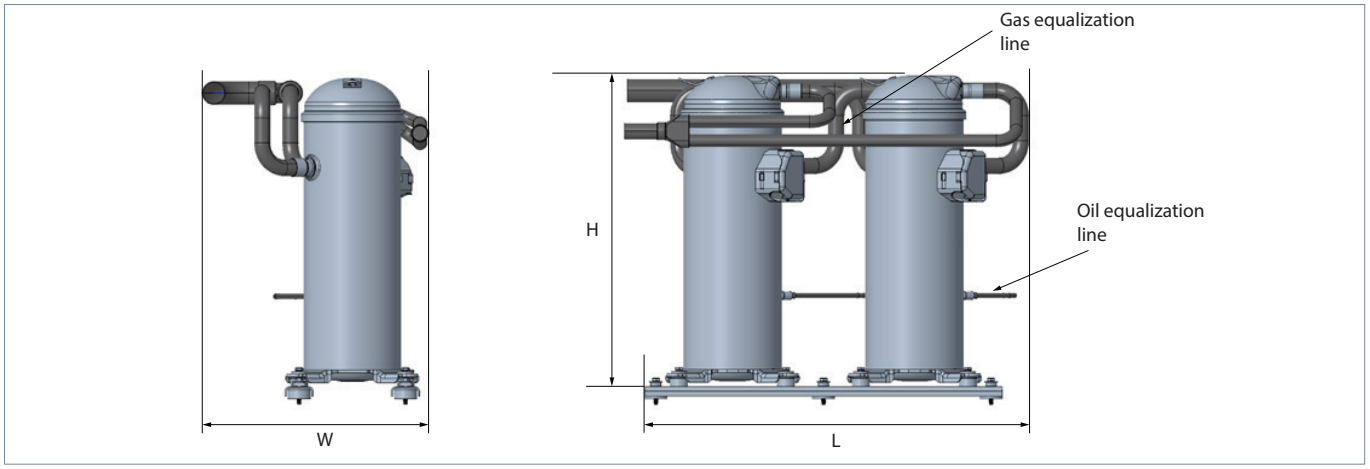

compressor evolution “B”

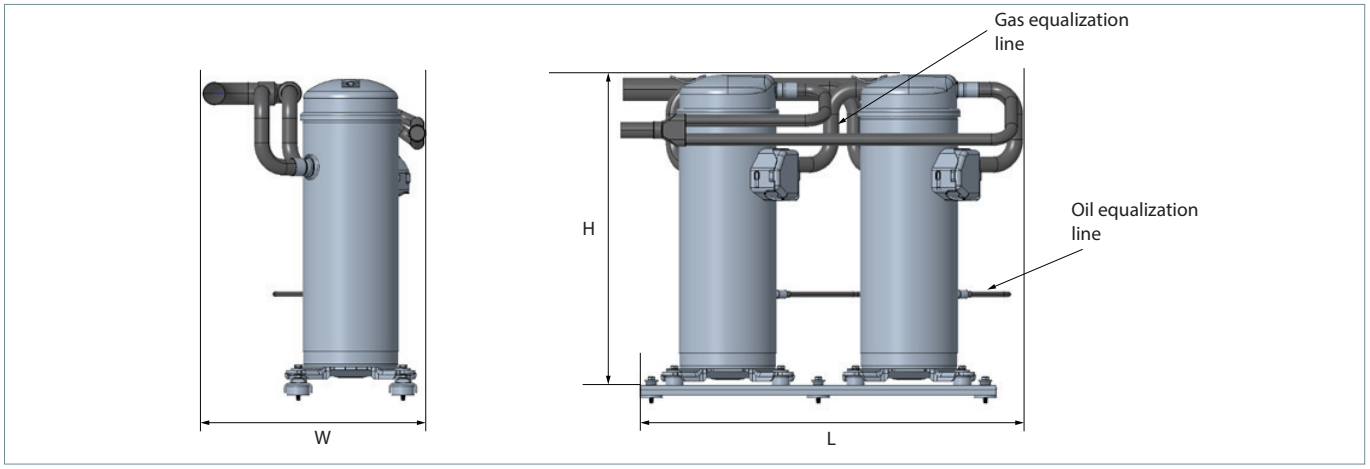

Tandem model	Composition	L(mm)	H(mm)	W(mm)	Outline drawing number	Comments
DCJ182E	DCJ091-A+ DCJ091-A	720	575	405	8590092	Not CE Marked
DCJ212E	DCJ106-A+ DCJ106-A	720	575	405	8590092	Not CE Marked
DCJ242E	DCJ121-A+ DCJ121-A	720	575	405	8590092	Not CE Marked
DCJ182E	DCJ091-B+ DCJ091-B	720	575	405	8590093	CE Marked
DCJ212E	DCJ106-B+ DCJ106-B	720	575	405	8590093	CE Marked
DCJ242E	DCJ121-B+ DCJ121-B	720	575	405	8590093	CE Marked

Motor voltage

Danfoss scroll compressors H Series are available in four different motor voltages as listed below.

Motor voltage code	Code 1	Code 2	Code 4	Code 7
Nominal voltage 50 Hz	-	200-220 V - 3 ph	380-415V - 3 ph	-
Voltage range 50 Hz	-	180 - 242 V	342 - 457 V	-
Nominal voltage 60 Hz	208-230 V - 1 ph	208-230 V - 3 ph	460 V - 3 ph	575 V - 3 ph
Voltage range 60 Hz	187 - 253 V	187 - 253 V	414 - 506 V	517 - 632 V

The maximum allowable voltage imbalance is 2%. Voltage imbalance causes high amperage over one or several phases, which in turn leads to overheating and possible motor damage. Voltage imbalance is given by the formula:

$$\text{\% voltage unbalance:} \quad \frac{|Vavg - V1\text{-}2| + |Vavg - V1\text{-}3| + |Vavg - V2\text{-}3|}{2 \times Vavg} \times 100$$

Vavg = Mean voltage of phases 1, 2 and 3
V1-2 = Voltage between phases 1 and 2
V1-3 = Voltage between phases 1 and 3
V2-3 = Voltage between phases 2 and 3.

Wiring connections

Danfoss Scroll Compressors H and DCJ series will only compress gas while rotating counter-clockwise (when viewed from the compressor top). Since single-phase motors will start and run in only one direction, reverse rotation is not a major consideration. Three-phase motors, however, will start and run in either direction, depending on the phase angles of the supplied power. Care must be taken during installation to ensure that the compressor operates in the correct direction (see "Phase sequence and reverse rotation protection").

Electrical box cover must be fitted and cable gland or similar protection component must be used on electrical box's knockouts before energizing the compressor to against accidental contact with electrical parts inside.

The drawings below show electrical terminal labelling and should be used as a reference when wiring the compressor. For three phase applications, the terminals are labelled T1, T2, and T3. For single-phase applications the terminals are labelled C (common), S (start), and R (run).

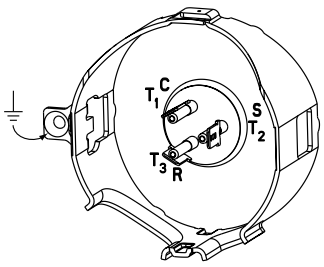

Quick connect spade terminals
P terminal box type

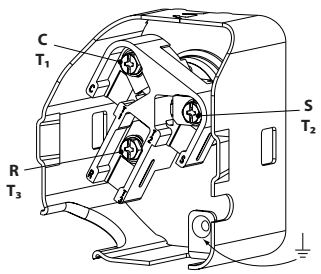

Ring connect screw terminals
C terminal box type

Terminal cover mounting

The terminal cover and gasket should be installed prior to operation of the compressor. The terminal cover has two outside tabs, 180 degrees apart, that engage the terminal fence.

When installing the cover, check that it is not pinching the lead wires. Both the inside of the terminal cover and the gasket have labels for the terminal pins: C (common), R (run), and S (start).

Terminal cover removal

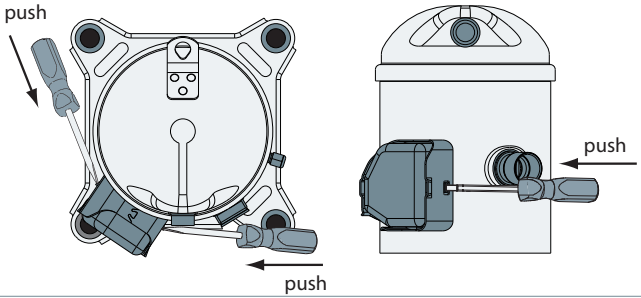

Three phase electrical characteristics

		Compressor model	LRA	MCC	Max. operating current	"Winding resistance (Ohm)"		
			A	A	A	L2-L3	L1-L3	L2-L1
Motor voltage code 2	200-220 V / 3ph / 50 Hz 208-230 V / 3ph / 60Hz	HRH029U2	95	20.0	14.8	1.18	0.87	1.18
		HRH032U2	95	20.0	16.3	1.18	0.87	1.18
		HRH034U2	95	22.0	17.4	1.18	0.87	1.18
		HRH038U2	115	23.0	18.8	0.98	0.73	0.98
		HRH044U2	120	26.0	17.5	0.68	0.67	0.67
		HRH051U2	123	27.5	20.5	0.59	0.59	0.59
		HRH054U2	123	27.5	20.5	0.59	0.59	0.59
		HLH061T2	170	30.0	24.9	0.48	0.48	0.46
		HLH068T2	160	36.0	25.7	0.45	0.45	0.45
		HLJ072T2	190	35.0	30.0	0.42	0.42	0.42
		HLJ075T2	190	35.0	31.2	0.41	0.4	0.41
		HLJ083T2	190	39.0	34.0	0.36	0.36	0.37
		DCJ091T2	250	43.5	36.4	0.28	0.28	0.28
		DCJ106T2	250	45	42	0.28	0.28	0.28
		DCJ121T2	265	54.0	50.1	0.26	0.26	0.26
Motor voltage code 4	380-415 V / 3ph / 50 Hz 460 V / 3ph / 60Hz	HRH029U4	45	10.0	6.8	4.66	3.42	4.66
		HRH032U4	45	10.0	7.5	4.66	3.42	4.66
		HRH034U4	45	10.0	8.0	4.66	3.42	4.66
		HRH038U4	50	12.0	9.4	3.87	2.85	3.87
		HRH044U4	60	13.5	9.1	2.65	2.61	2.6
		HRH051U4	70	13.0	9.9	2.37	2.35	2.34
		HRH054U4	70	15.0	10.2	2.37	2.36	2.35
		HLH061T4	82	15.0	12.8	1.83	1.85	1.84
		HLH068T4	87	19.0	14.3	1.93	1.92	1.93
		HLJ072T4	87	19.0	15.1	1.93	1.92	1.93
		HLJ075T4	100	18.0	15.7	1.62	1.6	1.63
		HLJ083T4	100	19.0	16.8	1.48	1.44	1.47
		DCJ091T4	125	25	20	0.98	0.97	1.01
		DCJ106T4	125	26	20	0.98	0.97	1.01
		DCJ121T4	125	25.0	22.1	0.98	0.97	1.01
Motor voltage code 7	575 V / 3 ph / 60 Hz	HRH032U7	38	8.5	6.2	7.34	5.38	7.34
		HRH044U7	42	10.5	7.8	4.32	4.34	4.39
		HRH051U7	53	11.5	7.8	4.12	4.06	4.03
		HRH054U7	53	11.7	8.2	4.12	4.06	4.03
		HLH061T7	63.6	12.0	10.8	2.89	2.83	2.87
		HLH068T7	62	13.5	10.4	3.26	3.29	3.33
		HLJ072T7	62	15.0	11.0	3.26	3.29	3.33
		HLJ075T7	72	14.0	11.4	3.21	3.30	3.26
		HLJ083T7	72	14.5	12.5	2.51	2.48	2.53
		DCJ091T7	110	17.6	14	1.6	1.6	1.6
		DCJ106T7	110	18	15.4	1.6	1.6	1.6
		DCJ121T7	110	21.0	17.8	1.60	1.60	1.60

Single phase electrical characteristics

	Compressor model	LRA	MCC	Max. operating current	"Winding resistance (Ohm)"	
		A	A	A	Start	Run
Motor voltage code 1 208-230 V / 1 ph / 60 Hz	HRH029U1	96.7	27.0	19.5	1.45	0.72
	HRH032U1	87.5	26.0	21.2	1.66	0.67
	HRH034U1	115	31.0	21.0	1.40	0.53
	HRH038U1	115	33.0	23.7	1.21	0.54
	HRH044U1	150	38.0	29.9	0.86	0.33
	HRH051U1	150	41.0	33.6	0.84	0.32
	HRH054U1	145	45.0	41.9	0.84	0.29
	HLH061T1	145	42.0	41.8	0.84	0.29
	HLH068T1	145	42.0	46.1	0.84	0.29

IP rating

The compressor terminal box IP rating according to IEC 529 is **IP22** for all models. IP ratings is only valid when correctly sized cable glands of the IP rating is applied.

- First numeral, level of protection against contact and foreign objects
  2 protections against object size over 12.5 mm (fingers of similar)
- Second numeral, level of protection against water
  2 protections against dripping water when tilted up to 15°

LRA (Locked Rotor Amp)

Locked Rotor Amp value is the higher average current as measured on mechanically blocked compressors tested under nominal voltage. The LRA value can be used as a rough estimation for the starting current. However, in most cases, the real starting current will be lower.

MCC (Maximum Continuous Current)

The MCC is the current at which the motor protection trips under maximum load and low voltage conditions. This MCC value is the maximum at which the compressor can be operated in transient conditions and out of the application envelope. Above this value, the external electronic module will cut-out the compressor to protect the motor.

Max Oper. A (Max operating current)

The max. operating current is the current when the compressors operate at maximum load conditions and nominal voltage. Max Oper. A can be used to select cables and contactors. In normal operation, the compressor current consumption is always less than the Max Oper. A value. When using the Max Operating Current to define cables and contactors, a tolerance of +5% need to be taken into account.

Winding resistance

Winding resistance is the resistance between indicated terminal pins at 25°C (resistance value +/- 7%).
Winding resistance is generally low and it requires adapted tools for precise measurement. Use a digital ohm-meter, a '4 wires' method and measure under stabilised ambient temperature. Winding resistance varies strongly with winding temperature ; If the compressor is stabilised at a different value than 25°C, the measured resistance must be corrected with following formula:

$$R_{tamb} = R_{25°C} \frac{a + t_{amb}}{a + t_{25°C}}$$

$t_{25°C}$: reference temperature = 25°C
t_{amb}: temperature during measurement (°C)
$R_{25°C}$: winding resistance at 25°C
R_{amb}: winding resistance at t_{amb}
coefficient a= 234.5

Motor protection

Danfoss Scroll Compressors H and DCJ series are equipped with an internal line break protector mounted on the motor windings. The protector is an automatic reset device, containing a snap action bimetal switch.

Internal protectors respond to over-current and overheating. They are designed to interrupt motor current under a variety of fault conditions, such as lose phase, running overload, and locked rotor.

If the internal overload protector trips out, it must cool down to about 60°C to reset. Depending on ambient temperature, this may take up to several hours.

Phase sequence and reverse rotation protection

The compressor will only operate properly in a single direction. Use a phase meter to establish the phase orders and connect line phases L1, L2 and L3 to terminals T1, T2 and T3, respectively. For three-phase compressors, the motor will run equally well in both directions. Reverse rotation results in excessive noise; no pressure differential between suction and discharge; and suction line warming rather than immediate cooling.
A service technician should be present at initial start-up to verify that supply power is properly phased and that compressor and auxiliaries are rotating in the correct direction.

Danfoss HR* and HL* series scroll compressor are designed to operate for a maximum of 150 hours in reverse, but as a reverse rotation situation can go unnoticed for longer periods, phase monitors are recommended.

For HC* series compressors, phase monitors are required. The selected phase monitor should lock out the compressor from operation in reverse.

Electrical connections

Danfoss scroll compressors are designed to operate without any assistance if running within the defined nominal voltage. PSC wiring is sufficient (see below).

PSC wiring

The start winding (C-S) of the motor remains in circuit through a permanent (run) capacitor.

This permanent (run) capacitor is connected between the start winding (C-S) and the run winding (C-R).

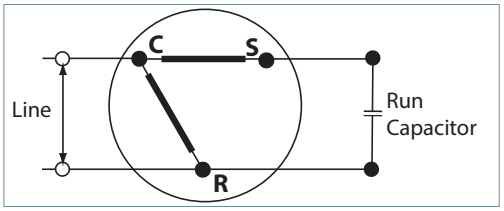

CSR wiring

If start assist is required, in case of operating below the nominal voltage, a CSR starting device is required.

During start-up, the start winding (C-S) is energised through an electromagnetic potential relay and a start capacitor.

A permanent (run) capacitor is wired between the start winding (C-S) and the run winding (C-R).

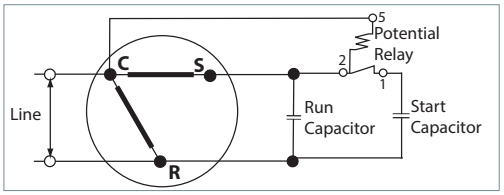

Nominal capacitor value and relays

Models			PSC wiring Run capacitor	CSR wiring Start capacitor	Relay	
60 Hz, motor voltage code 1	R410A R454B	HRH029	45 uF	145-175 µF	3AAR3*3M*	RVA 2ACKL
		HRH032-034	50 uF	88-108 µF	3ARR3*3L*	RVA 2ABKL
		HRH038	60 µF	88-108 µF	3ARR3*3L*	RVA 2ABKL
		HRH044-051	70 µF	161-193 µF	3ARR3*3L*	RVA 2ABKL
		HRH054, HLH061-068	80 µF	189-227 µF	3ARR3*3L*	RVA 2ABKL

Approvals and certificates

Danfoss scroll H and DCJ series compressors comply with the following approvals and certificates.

Certificates are listed on the product datasheets: http://www.danfoss.com/odsg

CE (European Directive)	CE	All evolution B models
UL (Underwriters Laboratories)	c UL us	All models Both evolution A and B
Other approvals / certificates		Contact Danfoss

Pressure equipment directive 2014/68/EU

Products	HRH051/54 -HLH061/68 -HLJ072/75/83 -DCJ091/106/121 evolution B	HRH029/32/34/38/44/51/54 -HLH061/68 -HLJ072/75/83 -DCJ091/106/121 evolution A
fluids R410A	Group 2	Group 2
fluids R454B	Group 1	Group 1
Category PED	II	NA
Evaluation module	D1	NA
TS-service temperature LP	-35°C < Ts < 55°C -31°F < Ts < 131°F	-35°C < Ts < 55°C -31°F < Ts < 131°F
TS-service temperature HP	-35°C < Ts < 150°C -31°F < Ts < 302°F	-35°C < Ts < 150°C -31°F < Ts < 302°F
Ps-service pressure LP	33.3 bar.g	NA
Ps-service pressure HP	HRH: 44.6 bar.g HLH/HLJ: 47.2 bar.g DCJ: 44.1 bar.g	NA

Low voltage directive 2014/35/EU

Products	All Evolution B Models
Declaration of conformity ref. Low voltage Directive 2014/35/EU	Contact Danfoss

Machines directive 2006/42/EC

Products	All Evolution B Models
Manufacturer's declaration of incorporation ref. Machines Directives 2006/42/EC	Contact Danfoss

Internal free volume

Products	Internal free volume at LP side without oil (litre)	Internal free volume at HP side without oil (litre)
HRH029/32/34/38 evolution A	2.93	0.49
HRH044/51/54 -HLH061/68 -HLJ072/75/83 evolution A	3.44	0.71
DCJ091/106/121 evolution A	4.46	0.5
HRH051/54 -HLH061/68 -HLJ072/75/83 evolution B	3.6	0.7
DCJ091/106/121 evolution B	4.62	0.7

Refrigerant and lubricants

General information

When choosing a refrigerant, different aspects must be taken into consideration:
- Legislation (now and in the future)
- Safety
- Application envelope in relation to expected running conditions
- Compressor capacity and efficiency
- Compressor manufacturer recommendations & guidelines

Additional points could influence the final choice:
- Environmental considerations
- Standardisation of refrigerants and lubricants
- Refrigerant cost
- Refrigerant availability

POE

The POE oil RL46HB(215PZ) is an ISO VG 46 synthetic polyolester (POE) lubricant formulated specifically for use in refrigeration and air-conditioning compressors using HFC refrigerants. This product provides effective wear pretection for steel and aluminum surfaces for increased system life and improved efficiency and is suitable for both initial and service fill. The combination of low temperature characteristics and unparalled chemical and thermal stability enable the use of RL46HB over a wide operting temperature range.

R454B

⚠ This product is validated in accordance to EN/IEC60335-2-34. Ignition risk is evaluated in accordance to EN/IEC60335-2-34, EN/IEC60335-2-40. See safety note at the bottom of this page.

The H and DCJ series can be applied on systems with R454B as the working fluid.
For countries where safety standards are not an indispensable part of the safety system Danfoss recommend the installer to get a third party approval of the system containing flammable refrigerant.
Note, please follow specific selection criteria stated in the datasheet for these particular refrigerants.

Note that the H and DCJ series has NOT been verified ATEX or IECEx or IEC 60079 series zone 2 compliant. This product is only validated for systems in compliance with EN/IEC60335-2-40. It is the responsibility of the user to verify such compliance. Improper use can cause explosion, fire, leakage potentially causing death, personal injury, or damage to property.

R454B is a HFO/HFC blend (R32 :68.9%; R1234yf: 31.1%) with a zero Ozone Depletion Potential (ODP=0) and a low Global Warming Potential (GWP: 467/AR5; 466/AR4). It is near-azeotropic mixture with a temperature glide around 1K.

R454B has very close match to R410A in terms of capacity and discharge temperature difference, and it offers better effeciencies compared to R410A.

R454B is classified A2L with low flammability properties. Please refer to European regulations and directives about the use of refrigerant of the A2L safety group (EN378, EN60335). Outside Europe refer to the local regulation.

Residual moisture

Prior to shipment from the factory, every compressor is dehydrated, evacuated, and charged with dry nitrogen. Maximum residual moisture levels are 0.0082 oz. for models capacities up to HRH040 and 0.0120 oz. for larger compressors.

Run-in process

Our H and DCJ product ranges feature a compliance technology which allows
. an exceptional slugging capability (radial compliance)
. a very low starting torque (axial compliance)

When a compressor with compliance technology is new, the performance is not immediately at peak. A run-in period is needed to polish all surfaces as well as to reduce friction and leakage. The run-in period eliminates extra power input

General requirements

Proper piping practices should be employed to:

1. Ensure adequate oil return, even under minimum load conditions (refrigerant speed, piping slope). For validation tests see section "Manage oil in the circuit".

2. Avoid condensed liquid refrigerant from draining back to the compressor when stopped (discharge piping upper loop). For validation tests see section "Manage off cycle migration".

General recommendations are described in the figures below:

fig.1

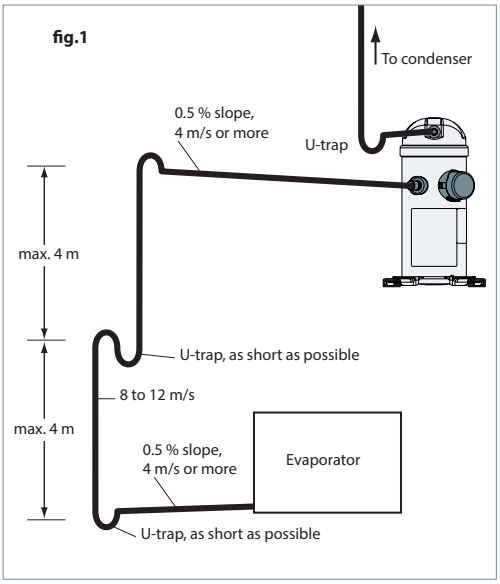

fig. 2

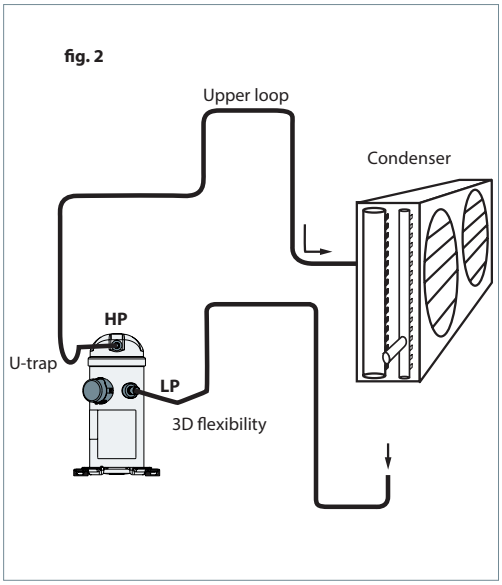

3. Piping should be designed with adequate three-dimensional flexibility to avoid excess vibration. It should not be in contact with the surrounding structure, unless a proper tubing mount has been installed. For more information on noise and vibration, see section on: "Manage sound and vibration".

Tandem requirements

Danfoss scroll compressor H and DCJ series tandem use static oil balancing principle to equalize oil level between the compressors by gravity. This is ensured by a precise suction and oil equalization piping designs.

The discharge line as no impact on oil balancing and is shown with tees, to indicate that both left and right side discharge header are possible

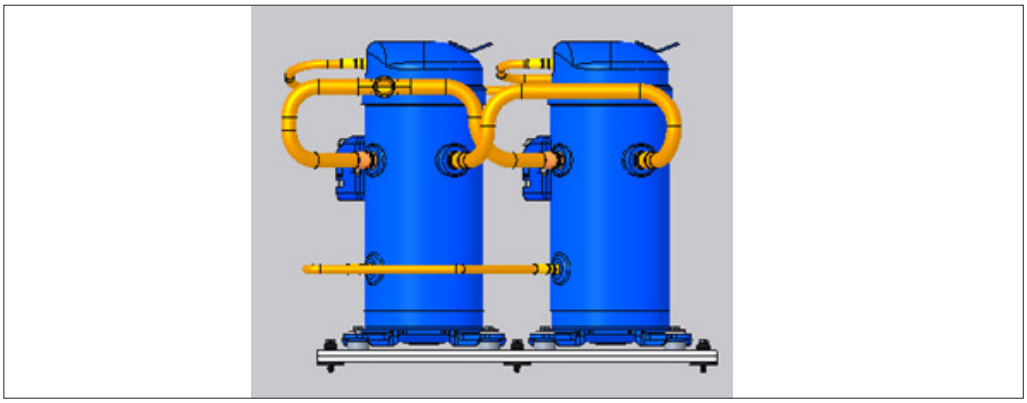

Danfoss scroll H and DCJ series compressors in C8 version can be mounted in tandem assemblies.

By default, H and DCJ series tandems are not factory-built, just provide tandem version compressors (feature 8).
Such manifolding applications require special design considerations that go beyond the scope of this document. Please contact Danfoss for further information.

For each tandem configuration, specific outline drawings are available as indicated in following tables.

R Suction and oil & gas equalization piping drawing must be respected (diameters, minimum straight lengths)

Design piping

H Series

Tandem model	Comp.1	Comp.2	Connection Sizes		Oil equalization(in)	Gas equalization(in)	Kit tandem code No	Outline drawing number
			Suction(in)	Discharge(in)				
TLJ102E	HRH051-A	HRH051-A	1-1/8″	3/4″	1/2″	7/8″	120Z0636	8590090
TLJ122E	HLH061-A	HLH061-A	1-1/8″	3/4″	1/2″	7/8″	120Z0636	8590090
TLJ136E	HLH068-A	HLH068-A	1-1/8″	3/4″	1/2″	7/8″	120Z0636	8590090
TLJ144E	HLJ072-A	HLJ072-A	1-1/8″	3/4″	1/2″	7/8″	120Z0636	8590090
TLJ150E	HLJ075-A	HLJ075-A	1-1/8″	3/4″	1/2″	7/8″	120Z0636	8590090
TLJ166E	HLJ083-A	HLJ083-A	1-1/8″	3/4″	1/2″	7/8″	120Z0636	8590090
TLJ137U	HLJ083-A	HRH054-A	1-1/8″	3/4″	1/2″	7/8″	120Z0636	8590090
TLJ151U	HLJ083-A	HLH068-A	1-1/8″	3/4″	1/2″	7/8″	120Z0636	8590090
TLJ155U	HLJ083-A	HLJ072-A	1-1/8″	3/4″	1/2″	7/8″	120Z0636	8590090
TLJ102E	HRH051-B	HRH051-B	1-1/8″	3/4″	1/2″	7/8″	120Z0636	8590091
TLJ122E	HLH061-B	HLH061-B	1-1/8″	3/4″	1/2″	7/8″	120Z0636	8590091
TLJ136E	HLH068-B	HLH068-B	1-1/8″	3/4″	1/2″	7/8″	120Z0636	8590091
TLJ144E	HLJ072-B	HLJ072-B	1-1/8″	3/4″	1/2″	7/8″	120Z0636	8590091
TLJ150E	HLJ075-B	HLJ075-B	1-1/8″	3/4″	1/2″	7/8″	120Z0636	8590091
TLJ166E	HLJ083-B	HLJ083-B	1-1/8″	3/4″	1/2″	7/8″	120Z0636	8590091
TLJ137U	HLJ083-B	HRH054-B	1-1/8″	3/4″	1/2″	7/8″	120Z0636	8590091
TLJ151U	HLJ083-B	HLH068-B	1-1/8″	3/4″	1/2″	7/8″	120Z0636	8590091
TLJ155U	HLJ083-B	HLJ072-B	1-1/8″	3/4″	1/2″	7/8″	120Z0636	8590091

DCJ Series

Tandem model	Comp. 1	Comp. 2	Connection Sizes		Oil equalization(in)	Gas equalization(in)	Kit tandem code No	Outline drawing number
			Suction(in)	Discharge(in)				
DCJ182E	DCJ091-A	DCJ091-A	1-5/8″	1-1/8″	3/8″	1-1/8‴	120Z0636	8590092
DCJ212E	DCJ106-A	DCJ106-A	1-5/8″	1-1/8″	3/8″	1-1/8‴	120Z0636	8590092
DCJ242E	DCJ121-A	DCJ121-A	1-5/8″	1-1/8″	3/8″	1-1/8‴	120Z0636	8590092
DCJ182E	DCJ091-B	DCJ091-B	1-5/8″	1-1/8″	3/8‴	1-1/8″	120Z0636	8590093
DCJ212E	DCJ106-B	DCJ106-B	1-5/8″	1-1/8″	3/8‴	1-1/8″	120Z0636	8590093
DCJ242E	DCJ121-B	DCJ121-B	1-5/8″	1-1/8″	3/8‴	1-1/8″	120Z0636	8590093

General requirements

Compressors used in single applications must be mounted with flexible grommets.

Compressors used in parallel application must be mounted with rigid mounting spacers onto rails and the manifold assembly must be mounted with flexible grommets onto frame.

During operation, the maximum inclination from the vertical plane must not exceed 3 degrees.

Single requirements

H and DCJ series compressors come delivered with flexible grommets, accessory Mounting kit 120Z5064.

The grommets must be compressed until contact between the flat washer and the steel mounting sleeve is established. The required bolt size for the H-series compressors is M8*40mm. This bolt must be tightened to a torque of 11 Nm.

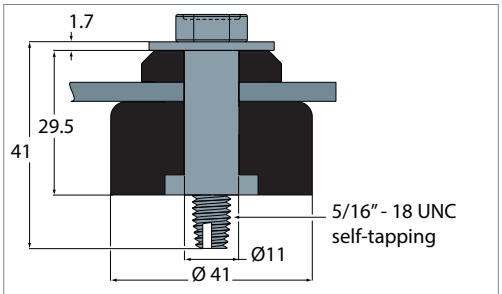

Recommended torque for mounting bolts:
11 Nm (±1 Nm)

Tandem requirements

Parallel mounting feet

For parallel mounting, the compressor must be mounted with rigid mounting spacers (included in the tandem kit 120Z0636) on the rails.

Rubber grommets and sleeves (delivered with the compressor) must be installed below the rails.

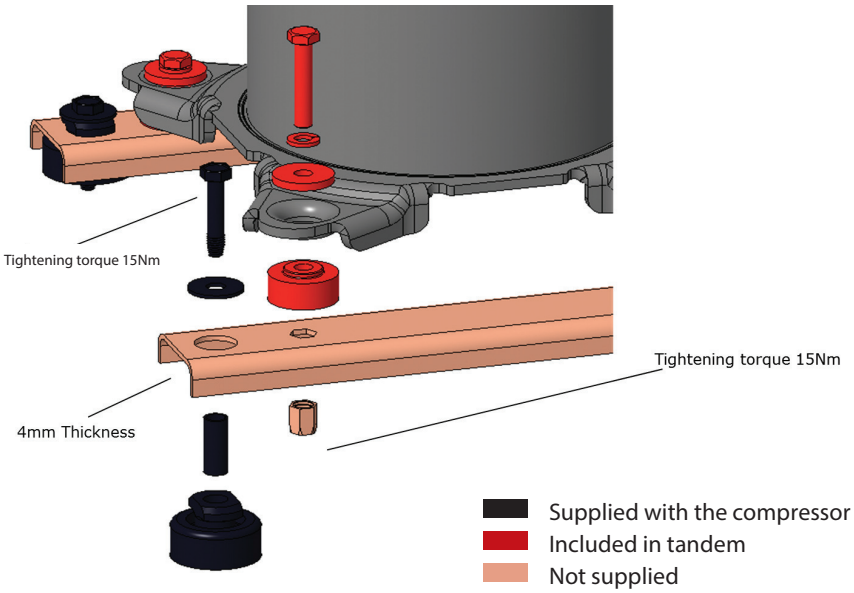

Typical sounds and vibrations in systems can be broken down into the following three categories:
- Sound radiation (through air)
- Mechanical vibrations (through parts and structure)
- Gas pulsation (through refrigerant)

The following sections focus on the causes and methods of mitigation for each of the above sources.

Compressor sound radiation

For sound radiating from the compressors, the emission path is air and the sound waves are travelling directly from the machine in all directions.

Sound levels are as follows:
- For compressors running alone:

Model	Sound level (dBa) – R410A/R454B								Acoustic hood code number
	5 / 50 / 10 /0 @50 Hz				7.2/54.4/11.1/8.3 @60 Hz				
	without Jacket		with Jacket		without Jacket		with Jacket		
	Nominal	Max	Nominal	Max	Nominal	Max	Nominal	Max	
HRH029-032	65	70	60	65	68	73	63	68	120Z5083
HRH034-038	66	71	61	66	69	74	64	69	120Z5083
HRH044- 51- 054	67	72	62	67	70	75	65	70	120Z5084
HLH061	70	75	65	70	73	78	68	73	120Z5084
HLH068,HLJ072-075-083	71	76	66	71	74	79	69	74	120Z5084
DCJ091-106-121	75	80	69	74	78	83	73	78	120Z5085

Note: During compressor shut down, a short reverse rotation sound is generated. The duration of this sound depends on the pressure difference at shut down and should be less than 3 seconds. This phenomenon has no impact on compressor reliability.

Mitigations methods:
We can consider two means to reduce compressors sound radiations:

1. Acoustic hoods are quick and easy to install and do not increase the overall size of the compressors to a great extent. Acoustic hoods are available from Danfoss as accessories. Refer to the table above for sound levels, attenuation and code numbers.
2. Use of sound-insulation materials on the inside of unit panels is also an effective means to reduce radiation.

Mechanical vibrations

Vibration isolation constitutes the primary method for controlling structural vibration. H-series scroll compressors are designed to produce minimal vibration during operations. The use of rubber isolators on the compressor base plate or on the frame of a manifolded unit is very effective in reducing vibration being transmitted from the compressor(s) to the unit. Rubber grommets are supplied with all H-series scroll compressors.

Once the supplied rubber grommets have been properly mounted, vibration transmitted from the compressor base plate to the unit are held to a strict minimum. In addition, it is extremely important that the frame supporting the mounted compressor be of sufficient mass and stiffness to help dampen any residual vibration potentially transmitted to the frame. The tubing should be designed so as to both reduce the transmission of vibrations to other structures and withstand vibration without incurring any damage. Tubing should also be designed for three-dimensional flexibility. For more information on piping design, please see the section entitled “Essential piping design considerations”.

Gas pulsation

The Danfoss Scroll Compressors H-series has been designed and tested to ensure that gas pulsation has been optimised for the most commonly encountered air conditioning pressure ratio. Manifolded compressors are equivalents to lagged sources of gas pulsation. Therefore pulse level can vary during time.

Mitigations methods:
If an unacceptable level is identified, a discharge muffler with the appropriate resonant volume and mass can be installed.

Requirement

R The operating envelope for H-series scroll compressors is given in the figures below and guarantees reliable operations of the compressor for steady-state and transient operation.

Steady-state operation envelope is valid for a suction superheat within 5K to 30K range.

R410A map (Max. DGT135°C)

This operating envelope applies to the following models,
- HRH029U2 - HRH029U4
- HRH032U1 - HRH032U2 - HRH032U4 - HRH032U7
- HRH034U1 - HRH034U2 - HRH034U4
- HRH038U2 - HRH038U4
- HRH044U1 - HRH044U2 - HRH044U4 - HRH044U7
- HRH051U1 - HRH051U2 - HRH051U4 - HRH051U7
- HRH054U1 - HRH054U2 - HRH054U4 - HRH054U7

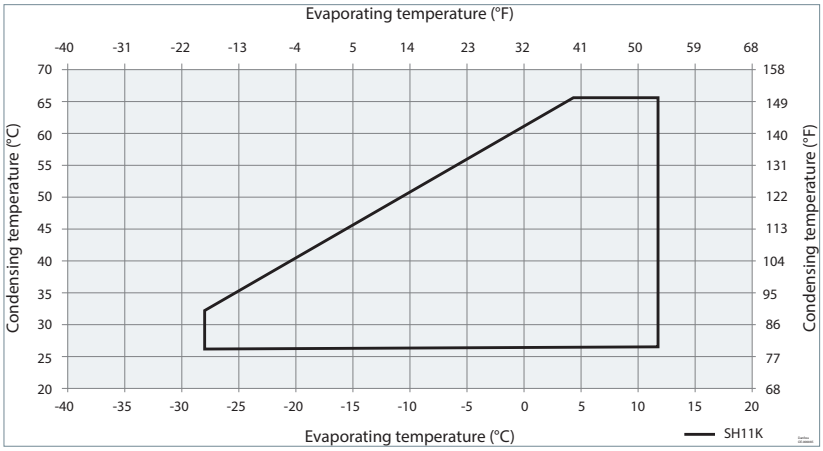

This operating envelope applies to the following models,
- HRH029U1

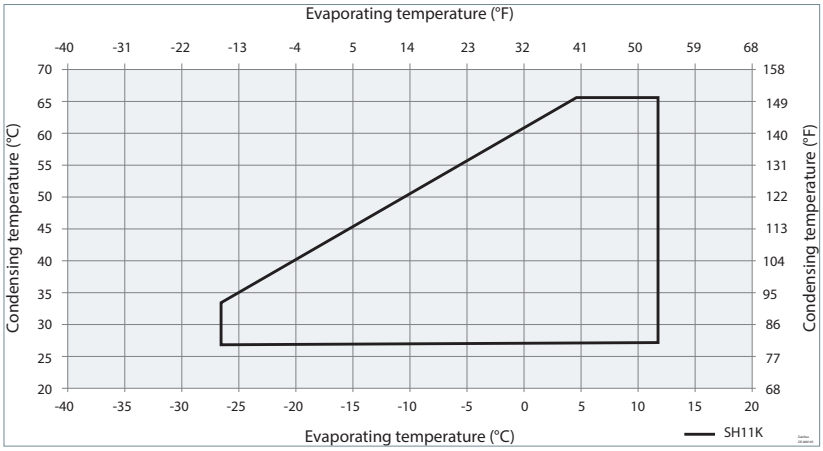

This operating envelope applies to the following models,
- HRH038U1

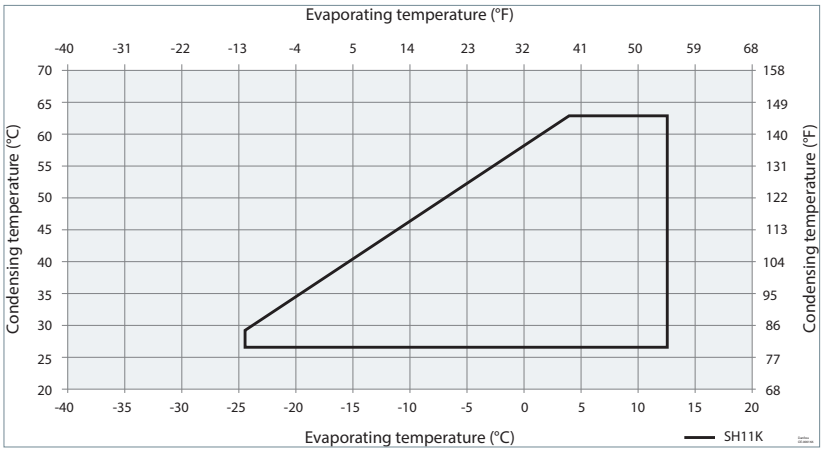

R454B map (Max. DGT150°C)

This operating envelope applies to the following models,
•HRH029U2 - HRH029U4
•HRH032U1 - HRH032U2 - HRH032U4 - HRH032U7
•HRH034U1 - HRH034U2 - HRH034U4
•HRH038U2 - HRH038U4
•HRH044U1 - HRH044U2 - HRH044U4 - HRH044U7
•HRH051U1 - HRH051U2 - HRH051U4 - HRH051U7
•HRH054U1 - HRH054U2 - HRH054U4 - HRH054U7

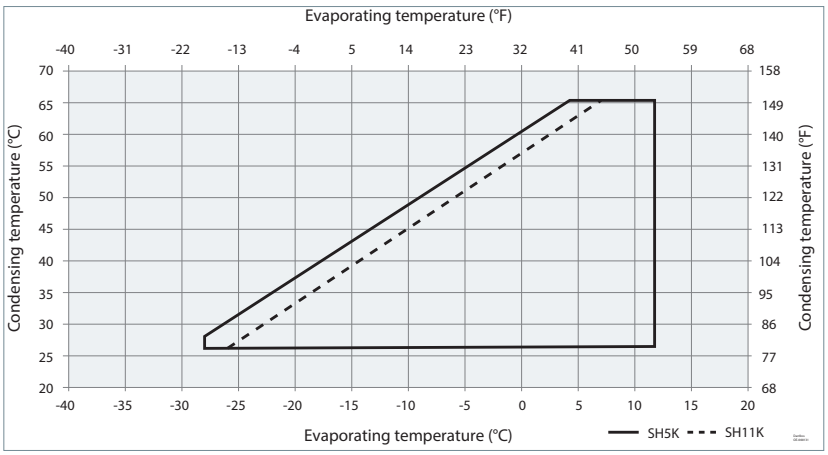

This operating envelope applies to the following models,
•HRH029U1

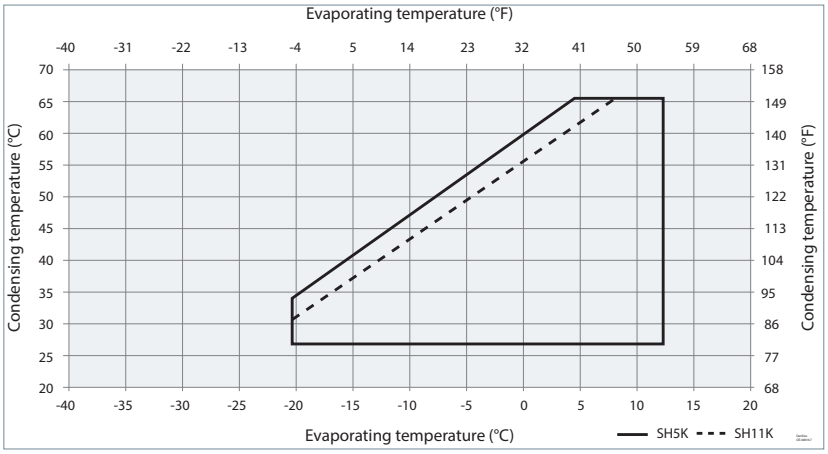

This operating envelope applies to the following models,
•HRH038U1

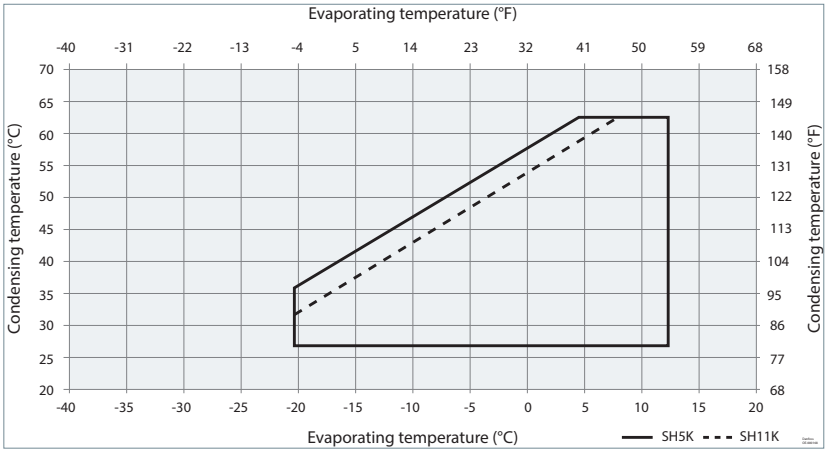

HLH-HLJ R410A (Max. DGT135°C) map

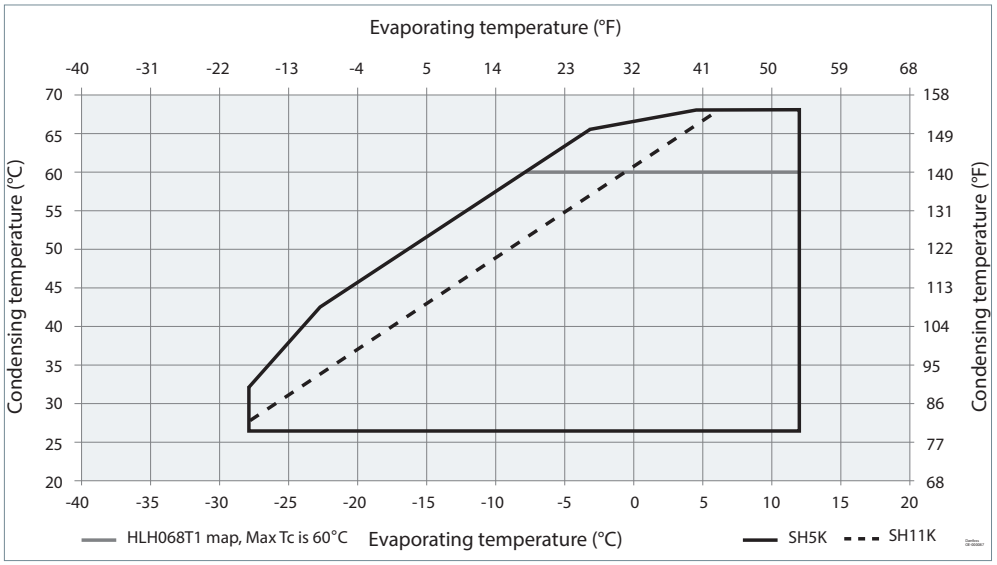

HLH-HLJ R454B (Max. DGT150ºC) map

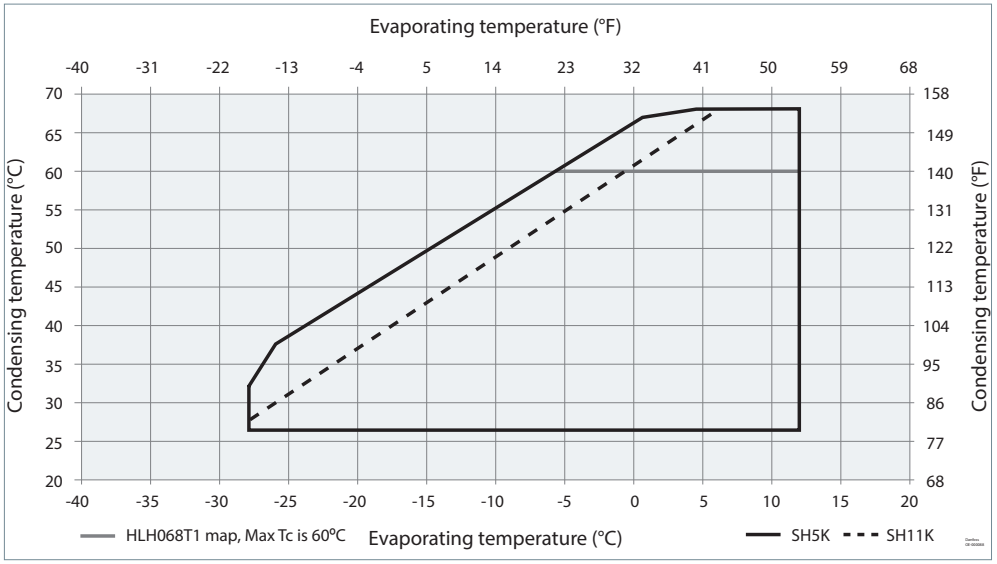

DCJ R410A (Max. DGT135°C) map

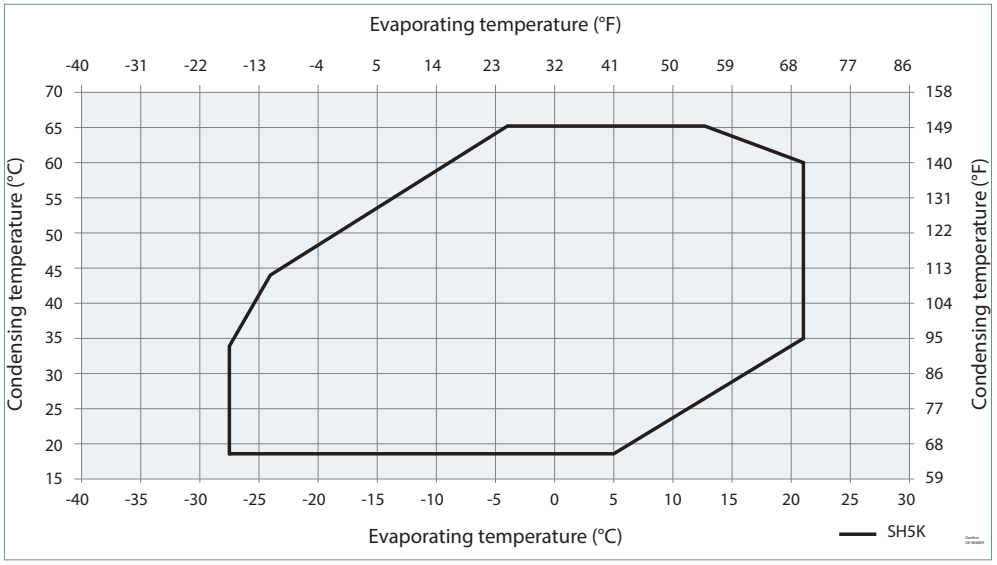

DCJ R454B (Max. DGT150°C) map

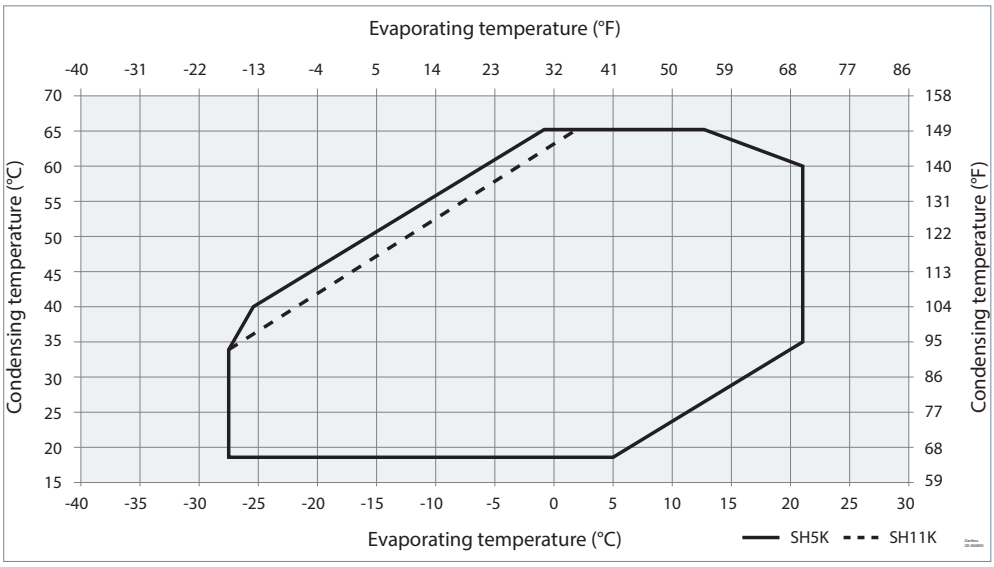

Pressure settings	HRH evolution A/B		HLH/HLJ evolution A/B		DCJ evolution A/B	
	R410A	R454B	R410A	R454B	R410A	R454B
	bar(g)	bar(g)	bar(g)	bar(g)	bar(g)	bar(g)
Working pressure range high side	16.2 - 42.2	14.9 - 39.3	16.2 - 44.7	14.9-41.8	13.0 - 41.6	11.9 - 38.8
Working pressure range low side	1.8-10.7	1.6-9.8	1.8-10.7	1.6-9.8	1.9-13.8	1.7 - 12.6
Maximum high pressure safety switch setting	44.6	41.7	47.1	44.2	44.0	41.2
Minimum low pressure safety switch setting	1.6	1.4	1.6	1.4	1.7	1.5
Recommended pump-down switch settings	1.5 bar below nominal evaporating pressure					
Minimum low pressure pump-down switch setting	2.3	2.3	2.3	2.3	2.3	2.3

High and low pressure protection

R LP and HP safety switches must never be bypassed nor delayed and must stop all the compressors.

When caused low by LP safety switch, limit the number of auto-restart to maximum 5 times within 12 hours.

! HP safety switch must be manual reset

Depending on application operating envelope, you must define HP and LP limits within operating envelope and pressure setting table above.

For H-series compressors, the external Discharge Gas Temperature protection (DGT) is mandatory if the high and low pressure switch settings do not protect the compressor against operations beyond its specific application envelope.

For R410A, the discharge gas thermostat kit (code 7750009) is recommended to be used, The DGT should be set to open at a discharge gas temperature of 135°C (275°F) or lower.

For R454B, the discharge temperature sensor (code 120Z0823) is recommended to be used, The DGT should be set to open at a discharge gas temperature of 150°C (302°F).

The thermostat must be attached to the discharge line within 150 mm from the compressor discharge port and must be thermally insulated and tightly fixed on the pipe.

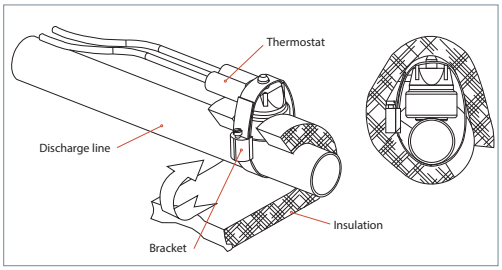

System evaluation

HP and LP must be monitored to respect operating envelope limitations. We consider two types of operating envelope management:

Basic:	Advanced:
• HP and LP switch • MOP (Max Operating Pressure) ensured by expansion device • Condensing pressure control • DGT external setting points: R410A max 135°C (275°F), R454B max150°C (302°F)	• HP and LP sensor • Operating envelope limits (permanent and transient) integrated into control logic • Temperature measurement (monitoring by sensor)

See “Test, criteria and solutions”

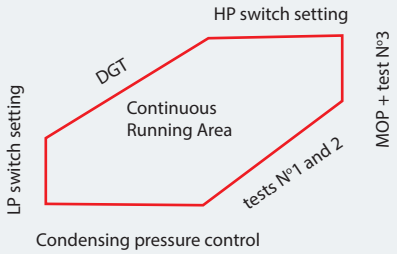

Test, criteria and solutions

Test N°	Purpose	Test condition	Pass criteria	Solutions
1	Check the compressor operation in the “continuous running area”.	Start test at minimum foreseeable evaporating temperature (minimum ambient temperature)	Confirmed compressor stable working in the continuous running area.	Work on compressor staging, fan staging, water flow etc.
2		Perform a defrost test if reversible unit		

During normal operation, refrigerant enters the compressor as a superheated vapor. Liquid flood back occurs when a part of the refrigerant entering the compressor is still in liquid state.

Liquid flood back can cause oil dilution and, in extreme situations lead to liquid slugging that can damage compression parts.

Requirement

In steady state conditions,
- Suction superheat must remain within 5K to 30K
- According to the floodback chart

In transient conditions,
- According to the floodback chart

Discharge temperature sensor must be placed onto the discharge fitting and be insulated.

Oil temperature sensor must be placed on the mid shell, closed to the lower shell, and be insulated.

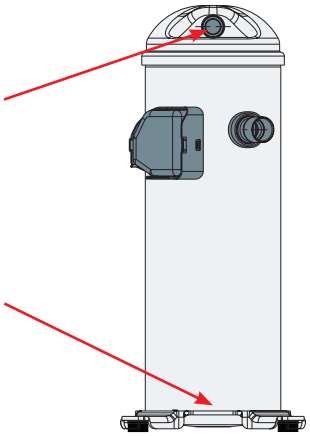

System evaluation

Use the tables below in relation with the system charge and the application to quickly evaluate the risk and potential tests to perform.

	BELOW CHARGE LIMIT	ABOVE CHARGE LIMIT
Non reversible	No test or additional safeties required	Liquid flood back test
Reversible	Defrost test	Liquid flood back test Defrost test

Charge limit is defined in table below:

	Models	Refrigerant charge limit(kg)
Single	HRH029 -032 -034 -038	3.6
	HRH044-051-054/HLH061-068/HLJ072-075-083	5.4
	DCJ091-106-121	7.2
Tandem	TLJ102E-122E-136E-144E-150E-166E-137U-151U-155U	6
	DCJ182E-DCJ212E-DCJ242E	8

Test, criteria and solutions

Test N°	Purpose	Test condition	Pass criteria	Solutions
Liquid flood back test	Steady-state	Liquid flood back testing must be carried out under expansion valve threshold operating conditions: a high pressure ratio and minimum evaporator load (A). 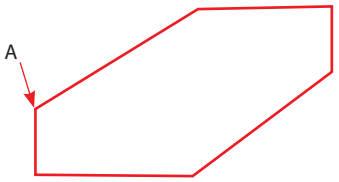	Suction superheat >5K (9°F) and the oil superheat shall not be more than 60 sec below the safe limit defined in the Dilution Chart. (see Dilution Chart - HRH/HLH/HLJ/DCJ)	1. Check expansion valve selection and setting. 2. Add a suction accumulator*.
	Transient	Tests must be carried out with most unfavorable conditions : • fan staging, • compressor staging • …	Oil superheat shall not be more than 60 sec per hour below the safe limit defined in the Dilution Chart. (see Dilution Chart - HRH/HLH/HLJ/DCJ)	1. Check expansion valve selection and setting. -For Thermostatic expansion valve (TXV) check bulb position... -For Electronic expansion valve (EXV) check measurement chain and PID.... 2. Add a suction accumulator*.
Defrost test	Check liquid floodback during defrost cycle	Defrost test must be carried out in the most unfavorable condition (at 0°C evaporating temperature).	Oil superheat shall not be more than 60 sec per hour below the safe limit defined in the Dilution Chart. (see Dilution Chart - HRH/HLH/HLJ/DCJ)	In reversible systems, the defrost logic can be worked out to limit liquid floodback effect. (for more details see “Control Logic”).

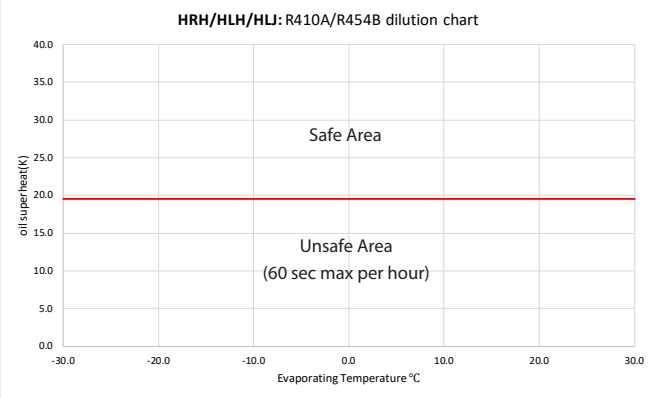

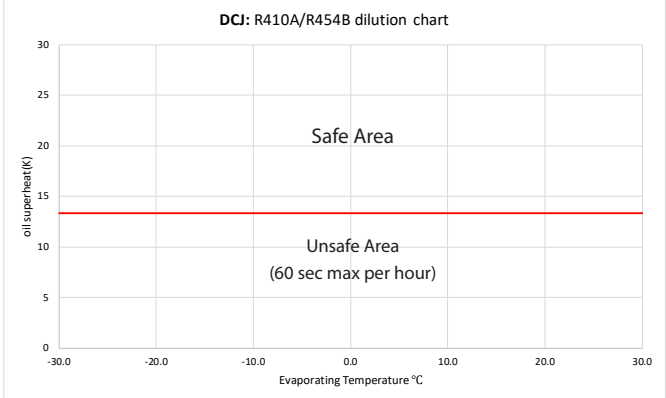

*Suction accumulator offers protection by trapping the liquid refrigerant upstream from the compressor. The accumulator should be sized at least 50 % of the total system charge. Suction accumulator dimensions can impact oil return (gas velocity, oil return hole size…), therefore oil return has to be checked according to section “Manage oil in the circuit”.

R Off -cycle refrigerant migration happens:
• when the compressor is located at the coldest part of the installation, refrigerant vapor condenses in the compressor.
• or directly in liquid-phase by gravity or pressure difference.

When the compressor restarts, the refrigerant diluted in the oil, or stored in evaporator, generates poor lubrication conditions and may reduce bearings life time. In extreme situations, this leads to liquid slugging that can damage compression scroll set.

Requirement

• Compressor can tolerate occasional flooded start, but it should remain exceptional situation and unit design must prevent that this situation happen at each start
• Right after start, liquid refrigerant must not flow massively to compressor

• The charge limit is a threshold beyond some protective measures must be taken to limit risk of liquid slugging and extreme dilution at start. (refer to charge limit table in section "Manage superheat").

Evaluate the risk

Use the table below in relation with the system charge (refer to charge limit table in section "Manage superheat") and the application to quickly define necessary safeties to implement and test to perform:

	BELOW CHARGE LIMIT	ABOVE CHARGE LIMIT
Non split	No test or additional safeties required	• Crankcase Heater* • Migration test • External Non Return Valve
Split	Since each installation is unique, no test can fully evaluate off-cycle migration, therefore the following safeties are required: • Crankcase Heater * • Liquid Line Solenoid Valve**+ pump-down cycle*** • (Internal Non-Return Valve integrated)	

Test, criteria and solutions

Test N°	Purpose	Test condition	Pass criteria	Solutions
Migration test	Check that there is no migration of refrigerant into the compressor (either liquid or vapour condensation)	Energize CCH*. Stabilize the non-running system at a pressure equivalent to 5°C . Raise the system pressure equivalent to 20°C. When saturated condensing temperature reaches 20°C then start the unit.	When all compressors are idle: • Check in liquid line sight glass that there is no liquid refrigerant transfer • Refer to flood back chart criteria After compressors has started: • Oil superheat must remain the criteria refer to flood back chart.	1. Check bulb position, tightness of expansion device, 2. add LLSV** 3. add pump down cycle*** 4. Check Crank Case Heater efficiency

Oil temperature sensor must be placed between oil sight glass and compressor baseplate and be insulated.

* Crank case heater (CCH)
The Crank case heaters are designed to protect the compressor against off-cycle migration of refrigerant.
Additional heater power or thermal insulation might be needed in case of ambient temperature below -5°C and a wind speed above 5m/second.
The heater must be energized whenever all the compressors are off.
Crank case heater accessories are available from Danfoss (see section "Accessories").

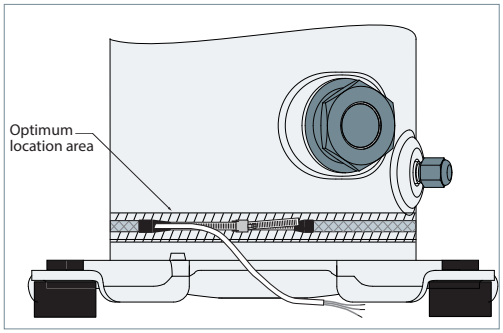

Provide separate electrical supply for the heaters so that they remain energized even when the machine is out of service (e.g. seasonal shutdown).

It's recommended that the heater be turned on for a minimum of 8 hours prior to starting the compressor.

**Liquid line solenoid valve (LLSV)
A LLSV is used to isolate the liquid charge on the condenser side, thereby preventing against charge transfer to the compressor during off -cycles. The quantity of refrigerant on the low-pressure side of the system can be further reduced by using a pump-down cycle in association with the LLSV.

***Pump-down cycle
By decreasing pressure in the sump, pump down:
• evacuates refrigerant from oil
• set the sump saturating pressure much lower than ambiance temperature and due to that, avoid refrigerant condensation in the compressor.

For more details on pump-down cycle see section "Control Logic".

On/off cycling (cycle rate limit)

Danfoss recommends a restart delay timer to limit compressor cycling. The timer prevents reverse compressor rotation, which may occur during brief power interruptions.

The system must be designed in a way that guarantees a minimum compressor running time of 2 minutes so as to provide for sufficient motor cooling after start-up along with proper oil return. Note that the oil return may vary since it depends upon system design.

There must be no more than 12 starts per hour, a number higher than 12 reduces the service life of the motor-compressor unit. A three-minute (180-sec) time out is recommended.

Wiring information

Requirements:

- An additional external overload protection is still advisable for either alarm or manual reset. For overload setting, take the max current you can face on the application and add 10%. Setting must always be lower than Max Operating Current (see table "Three phase electrical characteristics" from the section "Electrical data, connections and wiring")
- HP safety switch and DGT must be wired in the safety chain. Other safety devices such as LP can be either hardware or software managed.
- Provide separate electrical supply for the heaters so that they remain energized even when the machine is out of service (e.g. seasonal shutdown).

The wiring diagrams below are examples for a safe and reliable compressor wiring:

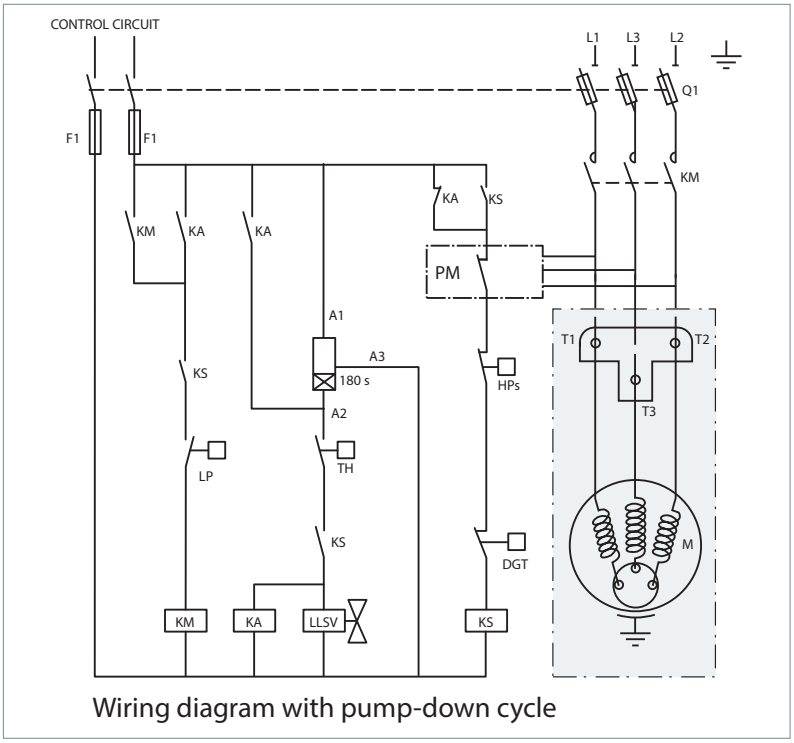

Wiring diagram with pump-down cycle

Control device..... TH
Optional short cycle timer (3 min) .....180 s
Control relay ..... KA
Liquid Line Solenoid valve.....LLSV
Compressor contactor..... KM
Phase monitor ..... PM
Safety lock out relay.....KS
Pump-down control low pressure switch ..LP
High pressure safety switch..... HPs
Fused disconnect Q1
Fuses F1
Compressor motor .....M
Discharge gas thermostat..... DGT

Note:
For H-series compressor, phase monitors are mandatory. The selected phase monitor should lock out the compressor from operation in reverse.

Safety control logic requirements

	Tripping conditions		Re-start conditions	
	Value	Time	Value	Time
HP switch	See Pressure settings table from section "Manage operating envelope"	Immediate, no delay. No by- pass	Conditions back to normal. Switch closed again	Manual reset
LP safety switch				Maximum 5 auto reset during a period of 12 hours, then manual reset.
Electronic module (Motor protection, DGT)	Contact M1-M2 opened			

Cycle rate limit requirements

Danfoss requires a minimum compressor running time of 2 minutes to ensure proper oil return and sufficient motor cooling.
Additionally, compressor service life is based on a maximum of 12 starts per hour.

Therefore, to guarantee these 2 requirements, a three-minute (180- sec) time out is recommended.

Oil management logic recommendations

In some cases, oil management can be enhanced by control logic:

If oil return test failed, a function can be integrated in control to run all compressors simultaneously for one minute every hour in order to boost oil return. Time and delay can be fine-tuned by oil return test N°1 §Manage oil in the circuit. During oil boost, pay special attention to superheat management to avoid liquid flood back and foaming.

If after running long time in full load, oil unbalance appears, then a function can be in control to stop all compressors in manifold for one minute every two hours in order to balance oil between compressors. Time and delay can be fine-tuned by Oil balancing test N°2 § Manage oil in the circuit.

Defrost logic recommendations

In reversible systems, the defrost logic can be worked out to limit liquid flood back effect by:
1. Running full load during defrost to share liquid refrigerant between all compressors.
2. Transferring liquid refrigerant from one exchanger to the other one thanks to pressures.

The following defrost logic combines both advantages:

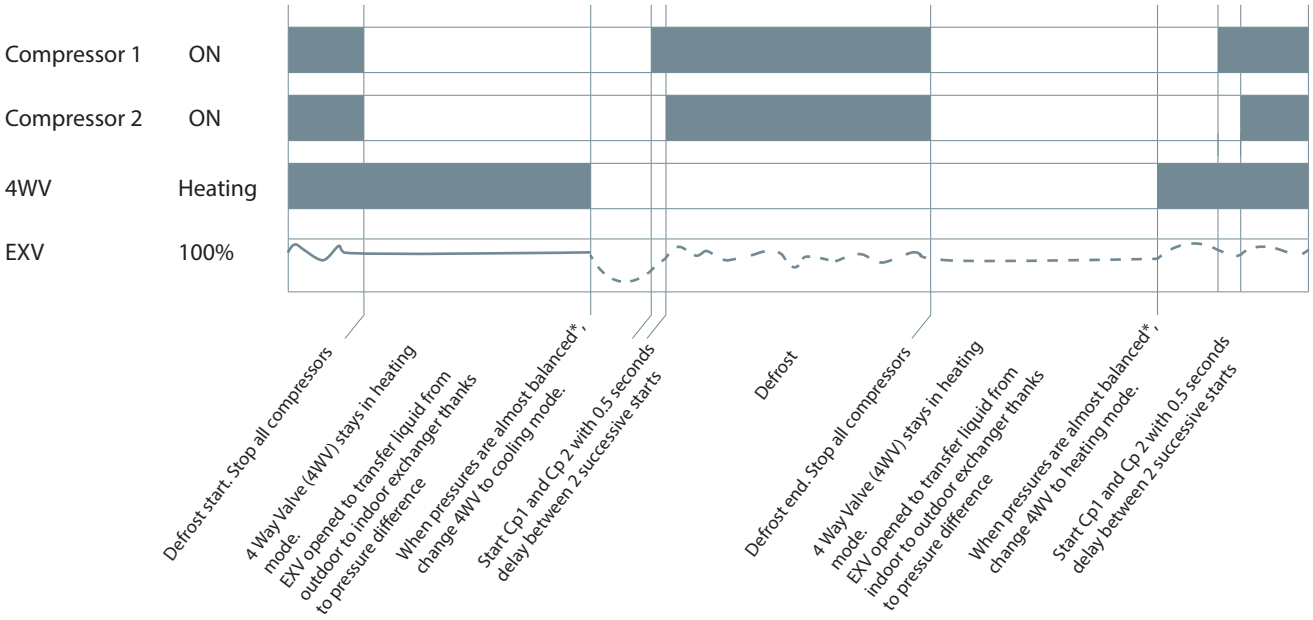

* EXV Opening degree and time have to be set to keep a minimum pressure for 4 way valve moving. In any case, defrost logics must respect requirements and tests described in sections "Manage superheat" and "Manage operating envelope".

Pump-down logic recommendations

Pump down is initiated prior to shutting down the last compressor on the circuit by de-energizing a liquid line solenoid valve or closing electronic expansion valve. When suction pressure reached the cut-out pressure, compressor is stopped, and liquid solenoid valve or electronic expansion valve remains closed.

Two types of pump-down exist:
- One shot pump down (preferred): when last compressor of the circuit stops, suction pressure is decreased 2.5 bar (R410A) below nominal evaporating pressure. Even if suction pressure increases again, the compressor will not restart.
- Continuous pump-down: traditional pump-down, Compressor restarts automatically when suction pressure increases. A non-return valve in the discharge line is recommended.

	Excessive air and moisture • can increase condensing pressure and cause excessively high discharge temperatures. • can create acid giving rise to copper platting.	• can destroy the lubricating properties of the oil. All these phenomena can reduce service life and cause mechanical and electrical compressor failure.
Requirements	H and DCJ series compressors are delivered with < 100 ppm moisture level. At the time of commissioning, system moisture content may be up to 100 ppm.	During operation, the filter drier must reduce this to a level between 20 and 50 ppm.
Solutions	To achieve this requirement, a properly sized and type of drier is required. Important selection criteria's include: • driers water content capacity, • system refrigeration capacity, • system refrigerant charge.	For new installations with H-series compressors with polyolester oil, Danfoss recommends using the Danfoss DML (100% molecular sieve) solid core filter drier.

Compressor storage

Store the compressor not exposed to rain, corrosive or flammable atmosphere between -35°C and 70°C when charged with nitrogen and between -35°C and 55°C when charged with refrigerant.

Compressor holding charge

Each compressor is shipped with a nominal dry nitrogen holding charge between 0.3 and 0.7 bar and is sealed with elastomer plugs.

⚠ Respect the following sequence:

- Remove the nitrogen holding charge via the suction Schrader valve to avoid an oil mist blow out.
- Remove the suction plug first and the discharge plug afterwards to avoid discharge check valve gets stuck in open position.

An opened compressor must not be exposed to air for more than 20 minutes to avoid moisture is captured by the PVE oil.

Handling

⚠ Each Danfoss H-series scroll compressor is equipped with the lift ring on the top shell and ring for the discharge port.

- Always use both these rings when lifting the compressor.
- Use lifting equipment rated and certified for the weight of the compressor or compressor assembly.
- It is mandatory to use a spreader bar rated for the weight of the compressor to ensure safe compressor handling.
- It is recommended to maintain the spreader bar in an upright position during all handling manoeuvres (+/- 15° from horizontal).
- The use of lifting hooks closed with a clasp is recommended.
- For tandem and trio assemblies, use a spreader bar and all compressor rings as shown in picture below.
- Never use the lift rings on the compressor to lift the full unit.

Maintain the compressor in an upright position during all handling manoeuvres (maximum of 15° from vertical).



Mandatory

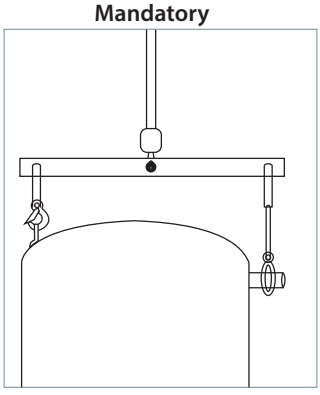

Forbidden

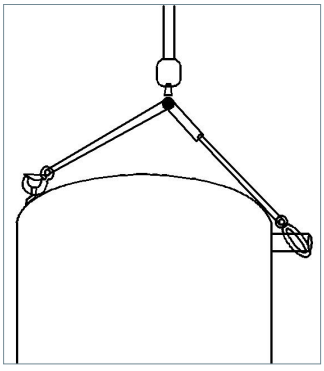

Piping assembly

Good practices for piping assembly is a pre-requisite to ensure compressor service life.

System cleanliness

Circuit contamination possible cause:	Requirement:
Brazing and welding oxides	During brazing, flow nitrogen through the system
Filings and particles from the removal of burrs in pipe-work	Remove any particles and burrs generated by tube cutting and hole drilling
Moisture and air	Use only clean and dehydrated refrigeration grade copper tubing Opened compressor must not be exposed to air more than 20 minutes to avoid moisture captured by POE oil.

Brazing procedure:

- Brazing operations must be performed by qualified personnel.
- Make sure that no electrical wiring is connected to the compressor.
- To prevent compressor shell and electrical box overheating, use a heat shield and/or a heat-absorbent compound.
- Clean up connections with degreasing agent
- Flow nitrogen through the compressor.
- Use flux in paste or flux coated brazing rod.
- Use brazing rod with a minimum of 5% silver content.
- It is recommended to use double-tipped torch using acetylene to ensure a uniform heating of connection.
- To enhance the resistance to rust, a varnish on the connection is recommended.

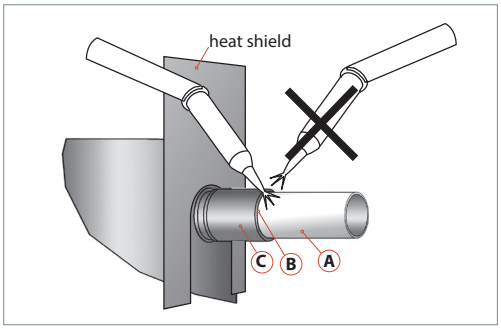

⚠ Before eventual un-brazing of the compressor or any system component, the refrigerant charge must be removed.

System pressure test and leak detection

⚠ The compressor has been strength tested and leak proof tested (<3g/year) at the factory.
For system tests:

- Always use an inert gas such as Nitrogen or Helium.
- Pressurize the system on HP side first then LP side.
- Do not exceed the following pressures:

Maximum compressor test pressures	HRH/HLH/HLJ/DCJ Evolution B	HRH/HLH/HLJ/DCJ Evolution A
Maximum compressor test pressure high side (HP)	"HRH/HLH/HLJ : 52 bar (g) / 754 psig DCJ : 48.6 bar (g) / 705 psig"	"53 bar (g) / 653 psi Do keep the low side pressure not exceed 31.1bar(g) / 451 psi"
Maximum compressor test pressure low side (LP)	HRH/HLH/HLJ/DCJ : 36.7 bar (g) / 532 psi	31.1 bar (g) / 451 psi

Vacuum evacuation and moisture removal

Requirements:
- Never use the compressor to evacuate the system.
- Connect a vacuum pump to both the LP and HP sides.
- Evacuate the system to a pressure of 500 µm Hg (0.67 mbar) absolute.

Recommendations:
- Energized heaters improve moisture removal.
- Alternate vacuum phases and break vacuum with Nitrogen to improve moisture removal.

For more detailed information see "Vacuum pump-down and dehydration procedure" TI-026-0302.

Refrigerant charging

R

Initial charge:
- For the initial charge, the compressor must not run.
- Charge refrigerant as close as possible to the nominal system charge.
- This initial charging operation must be done in liquid phase between the condenser outlet and the filter drier.

If needed, a complement of charge can be done:
- In liquid phase while compressor is running by slowly throttling liquid in.
- On the low pressure side, as far away as possible from the compressor suction connection.
- Never bypass safety low pressure switch.

For more detailed information see "Recommended refrigerant system charging practice" FRCC.EN.050.

Dielectric strength and insulation resistance tests

The tests are performed on each compressor at the factory between each phase and ground.

- Dielectric strength test is done with a high potential voltage (hi-pot) of 2Un +1000V AC at least, and leakage current must be less than 5 mA. Additional tests of this type are not recommended as it may reduce motor lifetime. Nevertheless, if such a test is necessary, it must be performed at a lower voltage.

R Do not use a megohm meter nor apply power to the compressor while it is under vacuum as this may cause internal damage.

- Insulation resistance is measured with a 500 V DC megohm tester and must be higher than 1 megohm.
- The presence of refrigerant around the motor windings will result in lower resistance values to ground and higher leakage current readings. Such readings do not indicate a faulty compressor. To prevent this, the system can be first operated briefly to distribute refrigerant.

Preliminary check

Check electrical power supply:

- Phase order: For H-series compressors, reverse rotation is obvious if the compressor do not build up pressure and sound level is abnormal high. For more details refer to section "Motor protection".
- Voltage and voltage unbalance within tolerance: For more details refer to section "Motor voltage".

Initial start-up

- Crankcase heaters must be energized at least 8 hours in advance to remove refrigerant.
- A quicker start-up is possible by "jogging" the compressor to evacuate refrigerant.

Start the compressor for 1 second, then wait for 1 to 2 minutes. After 3 or 4 jogs the compressor can be started. This operation must be repeated for each compressor individually.

System monitoring

The system must be monitored after initial startup for a minimum of 60 minutes to ensure proper operating characteristics such as:

- Correct superheat and subcooling.
- Current draw of individual compressors within acceptable values (max operating current).
- No abnormal vibrations and noise.
- Correct oil level.

If Oil Top-up is needed, it must be done while the compressor is idle. Use the schrader connector or any other accessible connector on the compressor suction line. Always use new cans. For more detailed information see "Lubricants filling in instructions for Danfoss Commercial Compressors" TI 2-025-0402.

Oil level checking and top-up

In installations with good oil return and line runs up to 50 ft, no additional oil is required. If installation lines exceed 50 ft, additional oil may be needed. 1 or 2% of the total system refrigerant charge (in weight) can be used to roughly define the required oil top-up quantity.

Always use oil from new cans.
Top-up the oil while the compressor is idle. Use any accessible connector on the compressor suction line and a suitable pump.



Danfoss recommends that compressors and compressor oil should be recycled by a suitable company at its site.

Packaging

Single pack

Compressors are packed individually in a cardboard box. They can be ordered in any quantity. Minimum ordering quantity = 1. As far as possible, Danfoss will ship the boxes on full pallets of 9 compressors according below table.

- Each box also contains following accessories:
- 4 grommets
- 4 assemblies of self tapping US thread bolts, washers and sleeves
- 4 additional sleeves
- 1 screw for earth connection
- Run capacitors are not provided

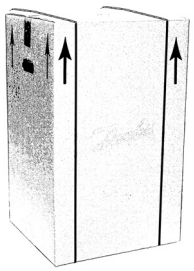

Industrial pack

Compressors are not packed individually but are shipped all together on one pallet. They can be ordered in quantities of full pallets only, multiples of 12 compressors, according below table.

Each industrial pack pallet contains following accessories:

- 4 grommets per compressor
- 4 sleeves per compressor
- 1 screw for earth connection per compressor

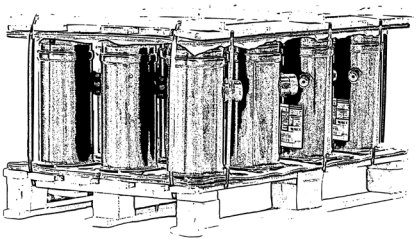

Packaging details

Delivered region	Packaging	Nbr	Pallet type	Comments
All	Single pack	9	Danfoss pallet	-
	Industrial pack	12	Danfoss pallet	

* Nbr : number of compressors/pallet

Compressor code numbers

Danfoss H and DCJ series scroll compressors can be ordered in either industrial packs or in single packs.

Please use the code numbers from below tables for ordering.

Compressors	Model Variation	Connections	Features	Evolution	Single pack				Industrial pack			
					Code no.				Code no.			
					1	2	4	7	1	2	4	7
HRH029	U	P	6	A	121L8527	121L8551	121L8601		121L8528	121L8552	121L8602	
HRH032	U	P	6	A	121L8529	121L8553	121L8603	121L8922	121L8530	121L8554	121L8604	121L8923
HRH034	U	P	6	A	121L8531	121L8555	121L8605		121L8532	121L8556	121L8606	
HRH038	U	P	6	A	121L8533	121L8557	121L8607		121L8534	121L8558	121L8608	
HRH044	U	P	6	A	121L8535	121L8559	121L8609	121L8924	121L8536	121L8560	121L8610	121L8925
HRH051	U	P	6	A	121L8537	121L8561	121L8611	121L8926	121L8538	121L8562	121L8612	121L8927
	U	C	8	A	121L8539	121L8563	121L8613	121L8928	121L8540	121L8564	121L8614	121L8929
	U	P	6	B			121L8499				121L8500	
	U	C	8	B			121L8501				121L8502	
HRH054	U	P	6	A	121L8541	121L8565	121L8615	121L8930	121L8542	121L8566	121L8616	121L8931
	U	C	8	A		121L8567	121L8617	121L8932		121L8568	121L8618	121L8933
	U	P	6	B			121L8503				121L8504	
	U	C	8	B			121L8505				121L8506	
HLH061	T	C	6	A	121L8543	121L8569	121L8475	121L8934	121L8544	121L8570	121L8476	121L8935
	T	C	8	A	121L8545	121L8571	121L8477	121L8936	121L8546	121L8572	121L8478	121L8937
	T	C	6	B			121L8487				121L8488	
	T	C	8	B			121L8489				121L8490	
HLH068	T	C	6	A	121L8547	121L8573	121L8902	121L8938	121L8548	121L8574	121L8903	121L8939
	T	C	8	A	121L8549	121L8575	121L8904	121L8940	121L8550	121L8576	121L8905	121L8941
	T	C	6	B			121L8507				121L8508	
	T	C	8	B			121L8509				121L8510	
HLJ072	T	C	6	A		121L8577	121L8479	121L8942		121L8578	121L8480	121L8943
	T	C	8	A		121L8579	121L8481	121L8944		121L8580	121L8482	121L8945
	T	C	6	B			121L8491				121L8492	
	T	C	8	B			121L8493				121L8494	
HLJ075	T	C	6	A		121L8581	121L8906	121L8946		121L8582	121L8907	121L8947
	T	C	8	A		121L8583	121L8908	121L8948		121L8584	121L8909	121L8949
	T	C	6	B			121L8511				121L8512	
	T	C	8	B			121L8513				121L8514	
HLJ083	T	C	6	A		121L8585	121L8483	121L8950		121L8586	121L8484	121L8951
	T	C	8	A		121L8587	121L8485	121L8952		121L8588	121L8486	121L8953
	T	C	6	B			121L8495				121L8496	
	T	C	8	B			121L8497				121L8498	
DCJ091	T	C	6	A		121L8589	121L8910	121L8954		121L8590	121L8911	121L8955
	T	C	8	A		121L8591	121L8912	121L8956		121L8592	121L8913	121L8957
	T	C	6	B			121L8515				121L8516	
	T	C	8	B			121L8517				121L8518	
DCJ106	T	C	6	A		121L8593	121L8914	121L8958		121L8594	121L8915	121L8959
	T	C	8	A		121L8595	121L8916	121L8960		121L8596	121L8917	121L8961
	T	C	6	B			121L8519				121L8520	
	T	C	8	B			121L8521				121L8522	
DCJ121	T	C	6	A		121L8597	121L8918	121L8962		121L8598	121L8919	121L8963
	T	C	8	A		121L8599	121L8920	121L8964		121L8600	121L8921	121L8965
	T	C	6	B			121L8523				121L8524	
	T	C	8	B			121L8525				121L8526	

Run capacitors for PSC wiring



Type	Code n°	Description	Application	Packaging	Pack size
70 µF	120Z0051	PSC wiring Run Capacitor 70 µF,	60HZ,Motor Code 1 : HRH044-HRH051	Multipack	10
60 µF	120Z0050	PSC wiring Run Capacitor 60 µF,	60Hz,Motor Code 1 : HRH038	Multipack	10
50 µF	8173233	PSC wiring Run Capacitor 50 µF,	60Hz,Motor Code 1 : HRH032-034	Multipack	10
45 µF	8173232	PSC wiring Run Capacitor 45 µF,	60Hz,Motor Code 1 : HRH029	Multipack	10

Start capacitors and starting relay for CSR wiring



Type	Code n°	Description	Application	Packaging	Pack size
145-175 µF	120Z0399	CSR wiring Start Capacitor 145-175 µF,	60HZ,Motor Code 1 : HRH029	Multipack	10
161-193 µF	120Z0400	CSR wiring Start Capacitor 161-193 µF,	60HZ,Motor Code 1 : HRH044-HRH051	Multipack	10
88-108 µF	8173001	CSR wiring Start Capacitor 88-108 µF,	60HZ,Motor Code 1 : HRH032-38	Multipack	10
RVA2ACKL	120Z0396	CSR wiring Starting Relay, motor voltage code 1 -208-230V / 1 / 60Hz	HRH029	Multipack	10
RVA2ABKL	120Z0397	CSR wiring Starting Relay, motor voltage code 1 -208-230V / 1 / 60Hz	HRH032-034-038-044-051-054/HLH061-068	Multipack	10

Rotolock adaptor set

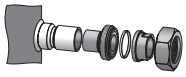

Type	Code no	Description	Application	Packaging	Pack size
	120Z0126	Rotolock adapter set(1-1/4"~3/4"),(1"~1/2")	HRH029-032-034-038 Group 1	Multipack	6
	120Z0127	Rotolock adaptor set (1-1/4" ~ 7/8") , (1" ~ 1/2")	HRH051-054,HLH061-068,HLJ072-075-083 Group 2	Multipack	6
	120Z0129	Rotolock adaptor set (1-3/4" ~ 1-1/8") , (1-1/4" ~ 7/8")	DCJ121 Group 4	Multipack	6

Rotolock adaptor



Type	Code no	Description	Application (see above group)	Packaging	Pack size
	120Z0367	Rotolock adaptor (1-1/4" ~ 7/8")	Group 2 & 3 suction	Multipack	10
	120Z0364	Rotolock adaptor (1-3/4" ~ 1-1/8")	Group 4 suction	Multipack	10
	120Z0365	Rotolock adaptor (1" ~ 1/2")	Group 1 & 2 discharge	Multipack	10
	120Z0366	Rotolock adaptor (1-1/4" ~ 3/4")	Group 3 discharge	Multipack	10
	120Z0367	Rotolock adaptor (1-1/4" ~ 7/8")	Group 4 discharge	Multipack	10

Crankcase heater



Type	Code No	Description	Application	Packaging	Pack Size
	120Z0055	Belt type crankcase heater,40W,230V,CE Mark, UL	HRH029-032-034-038	Multipack	6
	120Z0056	Belt type crankcase heater,40W,400V,CE Mark, UL		Multipack	6
	120Z0057	Belt type crankcase heater, 50 W, 230 V, CE mark	HRH044-051-054/HLH061-068/HLJ072/ HLJ075	Multipack	6
	120Z0058	Belt type crankcase heater, 50 W, 400 V, CE mark		Multipack	6
	120Z0059	Belt type crankcase heater, 65 W, 230 V, CE mark, UL	HLJ083 / DCJ121	Multipack	6
	120Z5011	Belt type crankcase heater, 70 W, 230 V, UL, CE mark		Multipack	6
	120Z0060	Belt type crankcase heater, 65 W, 400 V, CE mark, UL		Multipack	6
	120Z5012	Belt type crankcase heater, 70 W, 460 V, UL, CE mark		Multipack	6
	120Z5013	Belt type crankcase heater, 70 W, 575 V, UL, CE mark		Multipack	6

Discharge thermostat kit



Type	Code No	Description	Application	Packaging	Pack Size
	7750009	Discharge thermostat kit	All models (for Max DGT135°C)	Multipack	10
	7973008	Discharge thermostat kit		Industry pack	50

Discharge thermostat kit



Type	Code No	Description	Application	Packaging	Pack Size
	120Z0823	Discharge temperature sensor/converter	All models (for Max DGT150°C)	Single pack	1
	120Z0158	Discharge temperature sensor		Single pack	1
	120Z0824	Discharge temperature converter		Single pack	1

Lubricant



Type	Code No	Description	Application	Packaging	Pack Size
	120Z0648	POE lubricant, 215PZ(RL46HB), 1 litre can	HRH / HLH / HLJ / DCJ	Multipack	12

Mounting hardware



Type	Code No	Description	Application	Packaging	Pack Size
	120Z5017	Mounting grommet	All models	Single pack	1
	120Z5014	Mounting sleeve	All models	Single pack	1
	120Z5031	Mounting kit, including 1 bolt, 1 sleeve, 1 washer	All models	Single pack	1
	120Z5064	Mounting kit for 1 scroll compressor including 4 grommets, 4 sleeves, 4 bolts, 4 washers	All models	Single pack	1

Acoustic hoods



Type	Code No	Description	Application	Packaging	Pack Size
	120Z5083	Acoustic hood	HRH029-032-034-038	Single pack	1
	120Z5084	Acoustic hood	HRH044-51-54,HLH061-068,HLJ072-075-083	Single pack	1
	120Z5085	Acoustic hood	DCJ091-106-121	Single pack	1

IP54 upgrade kit



Type	Code No	Description	Application	Packaging	Pack Size
	118U0056	IP54 upgrade kit for round terminal box (P & T version)	P version	Multipack	6
	118U0057	IP54 upgrade kit for square terminal box (C & Q version)	C version	Multipack	6

Terminal box



Code No	Description	Application	Packaging	Pack Size
120Z5015	Round terminal box (P & T version)	P version	Multipack	10
120Z5018	Square terminal box (C & Q version)	C version	Multipack	10

Tandem kits



Type	Code No	Description	Application	Packaging	Pack Size
	120Z0636	Mounting kits for 2 compressors with 8 rigid spacers, 8 flat washers, 8 bolts, 8 locked washers, 1 suction washer	HRM, HLM, HCM, HRP, HLP, HCP, HRH, HLH, HLJ, HCJ	Multipack	6

ENGINEERING
TOMORROW

Danfoss Commercial Compressors

is a worldwide manufacturer of compressors and condensing units for refrigeration and HVAC applications. With a wide range of high quality and innovative products we help your company to find the best possible energy efficient solution that respects the environment and reduces total life cycle costs.

We have 40 years of experience within the development of hermetic compressors which has brought us amongst the global leaders in our business, and positioned us as distinct variable speed technology specialists. Today we operate from engineering and manufacturing facilities spanning across three continents.



Danfoss Turbocor Compressors



Danfoss Inverter Scrolls



Danfoss Scrolls



Danfoss Optyma Condensing Units



Danfoss Maneurop Reciprocating Compressors



Danfoss Light Commercial Refrigeration Compressors

Our products can be found in a variety of applications such as rooftops, chillers, residential air conditioners, heatpumps, coldrooms, supermarkets, milk tank cooling and industrial cooling processes.

member of:
ASERCOM
www.asercom.org

Danfoss A/S
Climate Solutions • danfoss.com • +45 7488 2222

Any information, including, but not limited to information on selection of product, its application or use, product design, weight, dimensions, capacity or any other technical data in product manuals, catalogues descriptions, advertisements, etc. and whether made available in writing, orally, electronically, online or via download, shall be considered informative, and is only binding if and to the extent, explicit reference is made in a quotation or order confirmation. Danfoss cannot accept any responsibility for possible errors in catalogues, brochures, videos and other material.
Danfoss reserves the right to alter its products without notice. This also applies to products ordered but not delivered provided that such alterations can be made without changes to form, fit or function of the product.
All trademarks in this material are property of Danfoss A/S or Danfoss group companies. Danfoss and the Danfoss logo are trademarks of Danfoss A/S. All rights reserved.

AB470335763668en-000202

© Danfoss | DCS (CC) | 2025.06