Data sheet



Sight glass
SG / SGP

Refrigeration system protectors

Description

Danfoss sight glasses, type SG/SGP, are installed after the filter drier in liquid line of refrigerating systems and in the compressor by using socket type, in order to observe property changes of the refrigerant (liquid/vapor) and to indicate the moisture level by colors.

Features & benefits

- Available with flare, solder and socket connections with and without moisture indicators
- Large viewing window for better visibility
- High precision color indicator
- Provides accurate identification of system conditions
- Easy to indicate liquid and oil level by float ball of socket type
- Good corrosion resistance by 2000 hours salt spray for brass material according to ASTM B117 requirement
- UL approval, conforms to Pressure Equipment Directive 2014/68/EU

Applications

Danfoss sight glasses, type SG/SGP:

- Can be installed in the liquid line between the filter drier and the expansion valve to monitor the condition and moisture content of the refrigerant (with indicator type).
- Can be installed in the oil return line to monitor the oil status (without indicator type).
- Can be installed in the receiver to monitor the refrigerant liquid level (socket type).
- Can be installed in the compressor/oil separator to monitor the oil level (socket type without indicator).

NOTE:

When storing, transporting or installing the Sight Glass, avoid the chemical indicator to get in contact with Non refrigerant medium or fluid (like water, oil, ect.)

Typical applications for SG/SGP are:

- Cold room
- Chiller
- Heat pump
- Transport refrigeration

Figure: Typical applications for SG/SGP

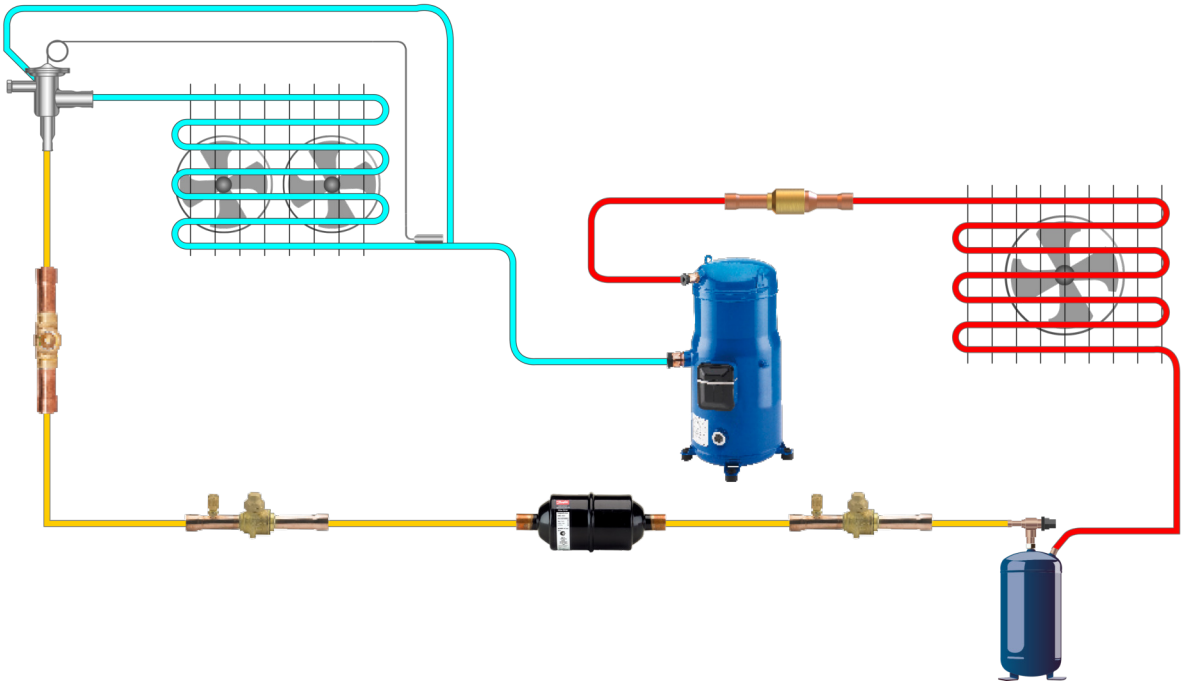

Ordering

Product code numbers

SG/SGP code numbers described in this data sheet are standard code numbers, i.e. made to stock.
Besides code numbers made to stock SG/SGP is also made to order. Make to order options include:

- Mechanical connection type
- Mechanical connection size
- New refrigerant

Multipack contains several items, individually packed, so that customers can purchase 1 item and receive all relevant documentation.

Industrial pack contains several items that are not individually packed. Industrial packs cannot be broken down, and will only contain documentation on pack level, not on item level.

Flare version and Solder version

Table: Without indicator

Type		Connection type	Connection		Max. working pressure: PS/MWP	Multi pack		Industrial pack	
			[in]	[mm]		Code no.	Qty/ pack	Code no.	Qty/ pack
	SGP 10 X	Flare ext. × ext.	⅜	–	52 bar / 754 psig	014L0080	25	–	–
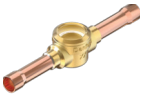	SG 10s	Solder ODF × ODF	⅜	–	35 bar / 500 psig	014-0037 (1)	25	–	–
	SGP 12s X		½	–	52 bar / 754 psig	014L0086	28	–	–
	SGP 16sX		⅝	16		014L0087	28	–	–
	SGP 22s X		⅞	–		014L1207	28	–	–

(1) Not UL approved

Table: With I type indicator

Type		Connection type	Connection		Max. working pressure: PS/MWP	Multi pack		Industrial pack	
			[in]	[mm]		Code no.	Qty/ pack	Code no.	Qty/ pack
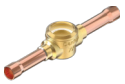	SGP 6s I	Solder ODF × ODF	¼	–	52 bar / 754 psig	014L0034	25	–	–
			–	6		014L0040	25	–	–
	SGP 10s I		⅜	–		014L0035	25	–	–
			–	10		014L0041	25	–	–
	SGP 12s I		½	–		014L0036	28	–	–
			–	12		014L0042	28	–	–
	SGP 16s I		⅝	16		014L0044	28	–	–
	SGP 18s I		–	18		014L0045	28	–	–
	SGP 19s I		¾	19		014L0047	28	–	–
	SGP 22s I		⅞	22		014L0039	28	–	–

Table: With N type indicator

Type		Connection type	Connection		Max. working pressure: PS/MWP	Multi pack		Industrial pack	
			[in]	[mm]		Code no.	Qty/ pack	Code no.	Qty/ pack
	SGN 6	Flare ext. × ext.	¼	–	35 bar / 500 psig	014-0161 (1)	25	014-1131 (1)	70
	SGN 10		⅜	–		014-0162 (1)	25	–	
	SGN 12		½	–		014-0163 (1)	25	–	–
	SGN 16		⅝	–		014-0165 (1)	36	–	–
	SGP 6 N		¼	–	52 bar / 754 psig	014L0161	25	–	–
	SGP 10 N		⅜	–		014L0162	25	–	–
	SGP 12 N		½	–		014L0163	25	–	–
	SGP 16 N		⅝	–		014L0165	36	–	–
	SGP 19 N		¾	–		014L0166	36	–	–
	SGN 6	Flare ext. × int.	¼	–	35 bar / 500 psig	014-0171 (1)	24	–	–
	SGN 10		⅜	–		014-0172 (1)	24	014-0124 (1)	70
	SGN 12		½	–		014-0173 (1)	24	–	–
	SGN 16		⅝	–		014-0174 (1)	36	–	–
	SGP 6 N		¼	–	52 bar / 754 psig	014L0171	24	–	–
	SGP 10 N		⅜	–		014L0172	24	014L0124	70
	SGP 12 N		½	–		014L0173	24	014L1128	70
	SGP 16 N		⅝	–		014L0174	36	014L0159	70
	SGP 19 N		¾	–		014L0175	36	014L0160	70
	SGN 10	Face Seal ext. ×int.	⅜	–	35 bar / 500 psig	–	–	014-1123 (1)	70
	SGP 10 N		⅜	–	52 bar / 754 psig	–	–	014L1123	70
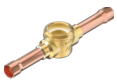	SGN 6s	Solder ODF × ODF	¼	–	35 bar / 500 psig	014-0181 (1)	25	014-0148 (1)	82
			–	6		014-0191 (1)	25	014-1020 (1)	82
	SGN 10s		⅜	–		014-0182 (1)	25	014-0246 (1)	82
			–	10		014-0192 (1)	25	014-0190 (1)	54
	SGN 12s		½	–		014-0183 (1)	28	014-0117 (1)	20
			–	12		014-0193 (1)	28	014-1130 (1)	20
	SGN 16s		⅝	16		014-0184 (1)	28	014-0199 (1)	54
	SGN 18s		–	18		014-0195 (1)	28	–	–
	SGN 19s		¾	19		014-0185 (1)	28	–	–
	SGN 22s		⅞	22		014-0186 (1)	28	014-0200 (1)	54
	SGN 22s (2)		1 ⅛	–		014-0187 (1)	28	–	–
	SGP 6s N		¼	–	52 bar / 754 psig	014L0181	25	014L0148	82
			–	6		014L0191	25	014L1020	82
	SGP 10s N		⅜	–		014L0182	25	014L0246	82
			–	10		014L0192	25	014L0190	54
	SGP 12s N		½	–		014L0183	28	014L0117	20
			–	12		014L0193	28	014L1130	20
	SGP 16s N		⅝	16		014L0184	28	014L0199	54
	SGP 18s N		–	18		014L0195	28	014L1095	54
	SGP 19s N		¾	19		014L0185	28	–	–
	SGP 22s N		⅞	22		014L0186	28	014L0200	54
	SGP 22s N (2)		1 ⅛	–		014L0187	28	–	–

	SGN 6s	Solder ODF × ODM	¼	–	35 bar / 500 psig	014-0201 (1)	25	–	–
	SGN 10s		⅜	–		014-0202 (1)	25	–	–
	SGN 12s		½	–		014-0203 (1)	28	–	–
	SGN 16s		⅝	16		014-0204 (1)	28	–	–
	SGN 22s		⅞	22		014-0206 (1)	28	–	–
	SGP 6s N		¼	–	52 bar / 754 psig	014L0201	25	–	–
	SGP 10s N		⅜	–		014L0202	25	–	–
			–	10		–	–	014L1099	82
	SGP 12s N		½	–		014L0203	28	014L1203	20
	SGP 16s N		⅝	16		014L0204	28	014L1204	54
	SGP 22s N		⅞	22		014L0206	28	014L1206	54

(1) Not UL approved

(2) Oversize connection

NOTE:
For the connection size ⅜ inch, ½ inch and ⅝ inch of flare external × internal, Cu gasket will be delivered with sight glass.

Socket version

Table: Without indicator

Valve type		Indicator	Connection type	Connection	Max. working pressure: PS/MWP	Float ball [pc]	With gasket	Multi pack		Industrial pack	
								Code no.	Qty/ pack	Code no.	Qty/ pack
	SGR	No	G thread	G ¾ in	35 bar / 500 psig	1	No	014-0004 (1)	19	–	–
			NPT	½ – 14 NPT		3	No	014-0002	19	–	–
			NPT	¾ – 14 NPT		1	No	014-0005 (1)	19	–	–
			M thread	M24 × 1		–	Yes	–	–	014-1066	80
	SGP ½ RX		NPT	½ – 14 NPT	52 bar / 754 psig	3	No	014L0002	19	–	–
	SGP ¾ RX		G thread	G ¾ in		1	No	014L0004	19	–	–
			NPT	¾ – 14 NPT		1	No	014L0005	19	–	–
	SGP 24 RX		M thread	M24 × 1		–	Yes	–	–	014L1066	80

(1) Not UL approved

G thread: ISO 228-1

NPT connection: ANSI/ASME B1.20.1

Table: With indicator

Valve type		Indicator	Connection type	Connection	Max. working pressure: PS/MWP	Float ball [pc]	With gasket	Multi pack		Industrial pack	
								Code no.	Qty/ pack	Code no.	Qty/ pack
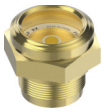	SGRN	N type	G thread	G ½ in	35 bar / 500 psig	3	No	–	–	014-0180	170
			NPT	½ – 14 NPT		3	No	014-0006	19	–	–
			M thread	M24 × 1		–	Yes	014-1155	10	–	–
	SGP ½ RN		G thread	G ½ in	52 bar / 754 psig	3	No	–	–	014L0180	170
			NPT	½ – 14 NPT		3	No	014L0006	19	–	–
	SGP 20 RN		M thread	M20 x 1.5		–	No	014L1601	19	–	–
	SGP 24 RN		M thread	M24 × 1		–	Yes	014L1155	10	–	–

NOTE:
Only M thread connection type sight glass has rubber gasket, and it will be delivered with sight glass.

Saddle

Valve type		Connection type	Connection	Tube connection	Multi pack		Industrial pack	
				[in]	Code no.	Qty/ pack	Code no.	Qty/ pack
	SGS	Tube fitting	M20 × 1.5	1 - ⅛	014-1571	10	014-1071	80
			M20 × 1.5	1 - ⅜	014-1574	10	014-1074	80
			M24 × 1	⅞	014-1559	10	014-1059	80
			M24 × 1	1 - ⅛	014-1556	10	014-1056	80
			M24 × 1	1 - ⅜	014-1557	10	014-1057	80
			M24 × 1	1 - ⅝	014-1558	10	014-1058	80
			M24 × 1	2 - ⅛	014-1567	10	014-1067	80

NOTE:
Only M thread connection type sight glass can match with saddle

Functions

The moisture indicators consist of a sensitive element that changes colour, from green to yellow, according to the moisture content PPM in the system.

The values under "green/dry" are to be considered as perfect condition meaning full protection against harmful effects from moisture.

If the green color starts to fade, the moisture content is reaching a critical level.

If the color changes to yellow it is a clear signal, that the capacity of the filter driers is exceeded and should be replaced as soon as possible.

If the operating conditions of the system are normal, the refrigerant fluid appears liquid through the glass of the indicator. The presence of bubbles indicates that lack of subcooling and the refrigerant deficiency.

At start-up, the colour of the sensitive element may be yellow, due to exposure to air humidity or due to moisture in the circuit. When the moisture of the refrigerant is returned to acceptable levels by the filter drier, the indicator colour turns green again. This is evidence that equilibrium has been re-established. If the yellow colour persists, measures must be taken to eliminate moisture. Only when the sensitive element turns green again, is there evidence that measures adopted were effective.

Media

Refrigerants

Table: Media specification

Valve type	Max. working pressure (PS/MWP)	Indicator type	Refrigerants	Approval
SG	35 bar / 500 psig	N type	A1: R134a, R22, R404A, R407A, R407C, R407F, R448A, R449A, R450A, R452A, R507A, R513A, R1233zd(E) A2L: R1234ze(E), R1234yf	PED(Art.4.3)
SGP	52 bar / 754 psig	I type	A3: R290, R600, R600a	UL 207, PED(Art.4.3)
		N type	A1: R134a, R22, R404A, R407A, R407C, R407F, R407H, R410A, R448A, R449A, R450A, R452A, R463A, R507A, R513A, R515B, R1233zd(E) A2L: R32, R452B, R454B, R454C, R455A, R1234ze(E), R1234yf A3: R1270 R744 (CO_2)	

Refrigerant oil: POE, PVE, PAG, PAO; Mineral oils

NOTE:

- For a complete list of approved refrigerants, visit store.danfoss.com and search for individual code numbers, where refrigerants are listed as part of product details.
- This product is approved for R290, R32, R452B, R454B, R454C, R455A, R600, R600a, R1234ze(E), R1234yf, R1270 by ignition source assessment in accordance to standard EN ISO 80079-36.
- Flare/face seal/socket connections are only approved for A1 and A2L refrigerants. These connections with high risk of leakage should not be used for A2 or A3 refrigerants.
- SG/SGP with indicator is not suitable for oil line application. For detailed information please contact Danfoss.
- Socket type can be used with refrigerant R744 (CO_2) except for the version with float ball.
- Socket type can be used with refrigerant R1233zd(E) except for the version with gasket.
- For the Max. media temperature which is above 55 °C /131 °F for socket type with float ball, please consult Danfoss.

For the application use with R744 as part of a secondary loop or cascade:

1. The design pressure of the refrigerant containing component is not less than the design pressure of the associated components.
2. The component is not provided with any pressure relief or pressure regulating relief valve and that a sufficient number of valves having capacity deemed adequate shall be field-installed on the refrigeration system.
3. When the refrigeration system is de-energized, venting of R744 may occur through the pressure regulating relief valves, and may need to be recharged, but the valve should not be defeated or bypassed.
4. A sufficient number of pressure relief and pressure regulating valves may need to be provided based upon system capacity and located such that no stop valve is provided between the relief valve and the parts or section of the system being protected.

Product details

General data

Table: Technical data for SG/SGP

Technical data	SG	SGP
Max. working pressure	35 bar / 500 psig	52 bar / 754 psig
Media temperature range	-50 – 80 °C / -58 – 175 °F	
Environmental transport/storage temperature and humidity	-40 – 65 °C /-40 – 150 °F. Air humidity: RH≤95%.	

Table: I type indicator for R290, R600, R600a

Refrigerant	Moisture content ppm = parts per million					
	I type indicator					
	Media temperature 25 °C / 77 °F			Media temperature 43 °C / 109 °F		
	Green / dry	Intermed. color	Yellow / wet	Green / dry	Intermed. color	Yellow / wet
R290	< 25	25 – 50	> 50	< 50	50 – 100	> 100
R600	< 10	10 – 20	> 20	< 28	28 – 55	> 55
R600a	< 11	11 – 22	> 22	< 30	30 – 60	> 60

Table: N type indicator for R134a, R22, R32, R404A, R407A, R407C, R407F, R407H, R410A, R448A, R449A, R450A, R452A, R452B, R454B, R454C, R455A, R463A, R507, R513A, R515B, R1233zd(E), R1234ze(E), R1234yf, R1270, R744 (CO_2)

Refrigerant	Moisture content ppm = parts per million					
	N type indicator					
	Media temperature 25 °C / 77 °F			Media temperature 43 °C / 109 °F		
	Green / dry	Intermed. color	Yellow / wet	Green / dry	Intermed. color	Yellow / wet
R134a	< 30	30 – 100	> 100	< 45	45 – 170	> 170
R22	< 30	30 – 120	> 120	< 50	50 – 200	> 200
R32	< 64	64 – 289	> 289	< 116	116 – 459	> 459
R404A	< 20	20 – 70	> 70	< 25	25 – 100	> 100
R407A	< 29	29 – 115	> 115	< 48	48 – 192	> 192
R407C	< 30	30 – 140	> 140	< 60	60 – 225	> 225
R407F	< 30	30 – 168	> 168	< 60	60 – 240	> 240
R407H	< 35	35 – 180	> 180	< 60	60 – 365	> 365
R410A	< 66	66 – 266	> 266	< 135	135 – 540	> 540
R448A	< 28	28 – 110	> 110	< 70	70 – 227	> 227
R449A	< 29	29 – 105	> 105	< 53	53 – 200	> 200
R450A	< 23	23 – 148	> 148	< 46	46 – 245	> 245
R452A	< 20	20 – 79	> 79	< 30	30 – 143	> 143
R452B	< 70	70 – 260	> 260	< 144	144 – 260	> 260
R454B	< 29	29 – 161	> 161	< 58	58 – 250	> 250
R454C	< 25	25 – 115	> 115	< 30	30 – 190	> 190
R455A	< 20	20 – 95	> 95	< 25	25 – 145	> 145
R463A	< 55	55 – 280	> 280	< 95	95 – 435	> 435
R507	< 15	15 – 60	> 60	< 30	30 – 110	> 110
R513A	< 22	22 – 75	> 75	< 22	22 – 123	> 123
R515B	< 20	20 – 95	> 95	< 20	20 – 140	> 140
R1233zd(E)	< 18	18 – 90	> 90	< 20	20 – 150	> 150
R1234ze(E)	< 26	26 – 132	> 132	< 28	28 – 165	> 165
R1234yf	< 20	20 – 43	> 43	< 20	20 – 63	> 63
R1270	< 16	16 – 62	> 62	< 29	29 – 115	> 115
R744 (CO_2)	< 80	80 – 195	> 195	–	–	–

Note: The indicator moisture content PPM is presented in the table for different refrigerants. The moisture content level varies with operating fluid temperature. For the PPM of other refrigerants and other media temperature, please contact Danfoss.

REACH requirements

All Danfoss products fulfill the requirements in REACH.

One of the obligations in REACH is to inform customers about presence of Candidate list substances if any, we hereby inform you about one substance on the candidate list:

A moisture indicator in a sight glass contains a paper which is impregnated with Cobalt Dichloride (CAS no: 7646-79-9) in a concentration above 0.1% w/w. If the valve has been damaged or dismantled:

- Avoid skin contact with the paper
- Do not inhale the dust from the paper
- The paper must be disposed as hazardous waste

Identification

Relevant product data is available on the product and box label. An example of a box label and product label are shown, including an explanation of the content.

Figure: Box label (example)



Figure: Product label (example)

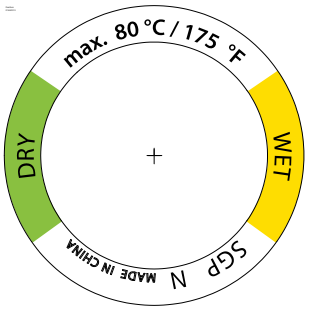

Table: Label explanation

Position	Inscription	Explanation
Box label	Sight glass	Product name
Box label	SGP 10s N	Product type
Box label	014L0182	Code number for ordering
Box label	ODF 3/8 in	Connection size and type
Box label	PS 52 bar/MWP 754 psig	Max. working pressure in bar and psig
Box label	BE5020E	Code for production place and time
		(BE = Wuqing, week 50, year 2020, weekday E =Friday)
Box label; Product label	MADE IN CHINA	Manufacturing site acc. to EN standards
Box label	EAN code	Barcode for individual code no. identification according to EAN standard
Box label	Additional information: Relevant approval authority logos	
Product label	Max. 80 °C/175 °F	Max. media temperature
Product label	WET/DRY	The colour of indicator: Yellow for wet; Green for dry

Design

Design and materials

Figure: Solder type

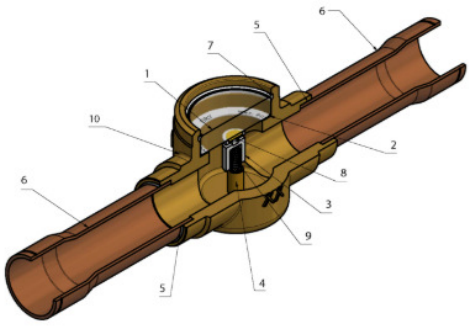

Figure: Socket type

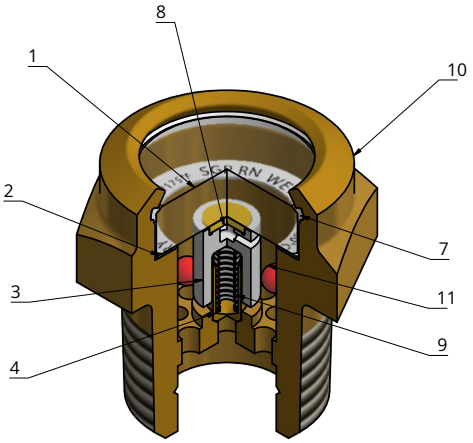

Table: Design and materials for SG/SGP

Position	Description	Material
1	Glass	Glass
2	Label	Paper
3	Indicator fixture	Plastic
4	Spring guide	Brass
5	Solder ring	Ag alloy
6	Connection tube	Copper
7	Teflon ring	PTFE
8	Indicator paper	Paper
9	Spring	Stainless steel
10	Valve body	Brass
11	Float ball	Plastic

Table: Design and materials for Indicator type

Indicator type	Label	Indicator fixture
I type	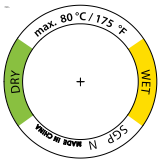	Green fixture 
N type	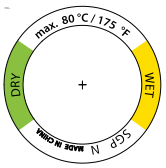	White fixture 

Dimensions

We have chosen to show dimensions of the major versions.

You will find downloadable dimension drawings for individual code numbers on Danfoss store as part of the Visuals tab for individual code numbers.

Weights also differ depending on the design of the individual code numbers. Weights are available as part of the technical data for individual code numbers on store.danfoss.com.

Figure: Flare, ext. × ext.

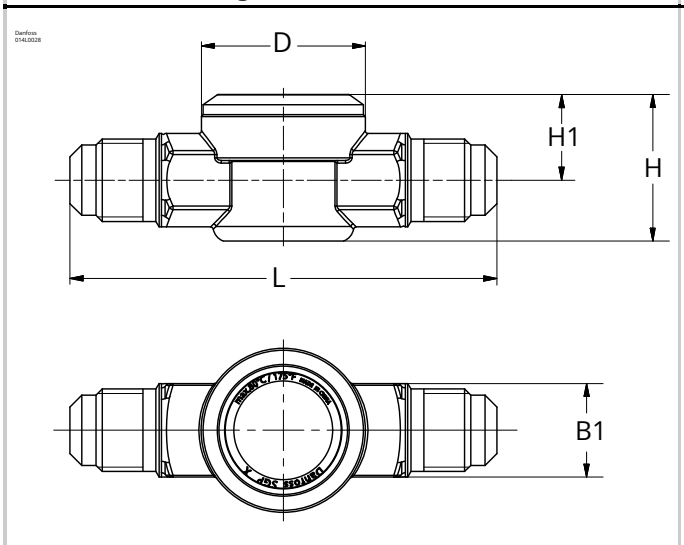

Figure: Flare, int. × ext.

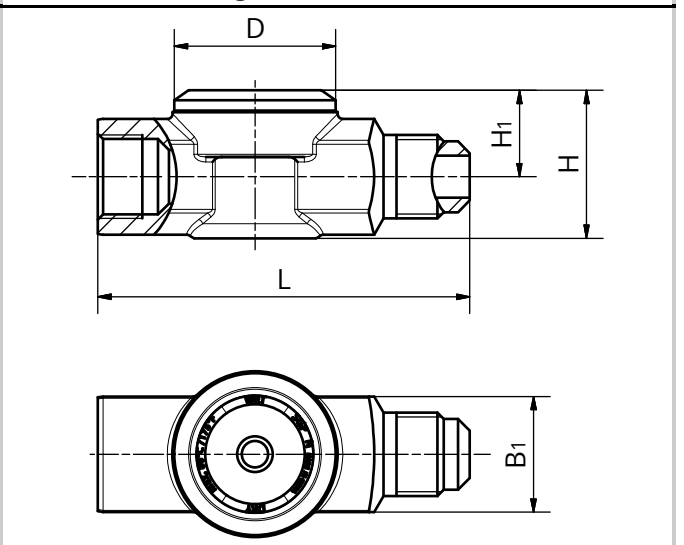

Table: Dimensions and weights for flare connection

Type	Connection type	SAE Flare	Flare Thread	L	H	H1	B1	øD	Net weight
		[in]		[mm]	[mm]	[mm]	[mm]	[mm]	[kg]
SGN 6	Flare ext.× ext.	¼	7/16-20UNF-2A	67	23	14	13	27	0.1
SGN 10		⅜	5/8-18UNF-2A	82	27	15	18	32	0.2
SGN 12		½	¾-16UNF-2A	88	29	17	21	32	0.3
SGN 16		⅝	7/8-14UNF-2A	104	36	21	27	32	0.4
SGP 6 N		¼	7/16-20UNF-2A	67	24	15	13	27	0.1
SGP 10 N, SGP 10 X		⅜	5/8-18UNF-2A	82	28	17	18	32	0.2
SGP 12 N		½	¾-16UNF-2A	88	30	19	21	32	0.3
SGP 16 N		⅝	7/8-14UNF-2A	104	37	22	25	32	0.4
SGP 19 N		¾	1 1/16-14UNS-2A	110	42	23	32	32	0.5
SGN 6	Flare int. × ext.	¼	7/16-20UNF-2A	57	23	14	16	27	0.1
SGN 10		⅜	5/8-18UNF-2A	71	30	17	22	32	0.2
SGN 12		½	¾-16UNF-2A	75	30	17	24	32	0.2
SGN 16		⅝	7/8-14UNF-2A	90	36	21	27	32	0.4
SGP 6 N		¼	7/16-20UNF-2A	57	24	15	16	27	0.1
SGP 10 N		⅜	5/8-18UNF-2A	71	28	17	22	32	0.2
SGP 12 N		½	¾-16UNF-2A	75	31	19	24	32	0.2
SGP 16 N		⅝	7/8-14UNF-2A	90	37	22	27	32	0.4
SGP 19 N		¾	1 1/16-14UNS-2A	98	42	23	32	32	0.5

Figure: Solder ODF × ODF

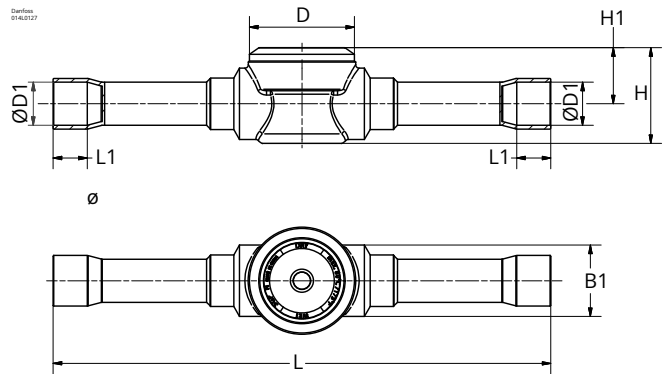

Figure: Solder ODF × ODM

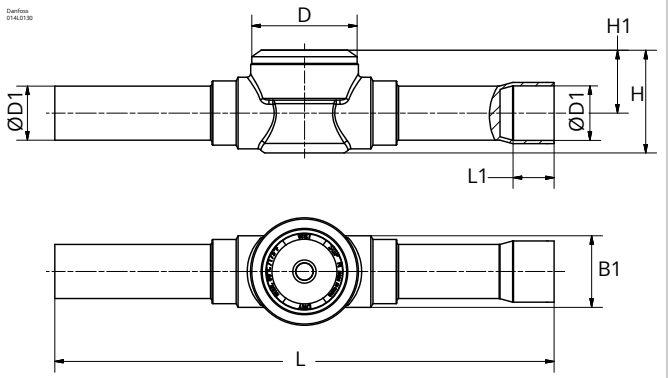

Table: Dimensions and weights for solder connection

Type	Connection type	Connection Size		[øD1]		[øD1] tolerance	L	L1	H	H1	B1	øD	Net weight
		[in]	[mm]	[mm]	[mm]	[mm]	[mm]	[mm]	[mm]	[mm]	[mm]	[mm]	[kg]
SGN 6s	Solder ODF × ODF	¼	6	6.35	6	+0.065/+0.155	101	7	23	14	15	27	0.1
SGN 10s, SG 10s		⅜	10	9.53	10		119	9	23	14	15	27	0.1
SGN 12s		½	12	12.7	12		146	10	27	15	21	27	0.2
SGN 16s		⅝	16	15.88	16		146	12	29	17	21	27	0.2
SGN 18s		–	18	–	18		173	14	36	21	28	32	0.3
SGN 19s		¾	19	19.05	19		173	14	36	21	28	32	0.3
SGN 22s		⅞	22	22.22	22	+0.075/+0.185	173	17	36	21	28	27	0.3
SGN 22s [1]		1 ⅛	–	28.58	–		173	22	36	21	28	27	0.3
SGP 6s N, SGP 6s I		¼	6	6.35	6	+0.065/+0.155	101	7	24	15	14	27	0.1
SGP 10s N, SGP 10s I		⅜	10	9.53	10		119	8	24	15	14	27	0.1
SGP 12s N, SGP 12s I, SGP 12s X		½	12	12.7	12		146	10	28	17	21	32	0.2
SGP 16s N, SGP 16s I, SGP 16s X		⅝	16	15.88	16		146	12	30	19	21	32	0.2
SGP 18s N, SGP 18s I		–	18	–	18		173	14	37	22	28	32	0.3
SGP 19s N, SGP 19s I		¾	19	19.05	19		173	14	37	22	28	32	0.3
SGP 22s N, SGP 22s I, SGP 22s X		⅞	22	22.22	22	+0.075/+0.185	173	17	37	22	28	32	0.3
SGP 22s N [1]		1 ⅛	–	28.58	–		173	22	37	22	28	32	0.3
SGN 6s	Solder ODF × ODM	¼	–	6.35	–	ODF: +0.065/+0.155 ODM: -0.05/+0.05	101	7	23	14	15	27	0.1
SGN 10s		⅜	–	9.53	–		119	9	23	14	15	27	0.1
SGN 12s		½	–	12.7	–		146	10	27	15	21	27	0.2
SGN 16s		⅝	16	15.88	16	ODF: +0.06/+0.13 ODM: -0.08/+0.08	146	12	29	17	21	27	0.2
SGN 22s		⅞	22	22.22	22	ODF: +0.075/+0.185 ODM: -0.08/+0.08	173	17	36	21	28	27	0.3
SGP 6s N		¼	–	6.35	–	ODF: +0.065/+0.155 ODM: -0.05/+0.05	101	7	24	15	14	27	0.1
SGP 10s N		⅜	10	9.53	10		119	8	24	15	14	27	0.1
SGP 12s N		½	–	12.7	–		146	10	28	17	21	32	0.2
SGP 16s N		⅝	16	15.88	16	ODF: +0.06/+0.13 ODM: -0.08/+0.08	146	12	30	19	21	32	0.2
SGP 22s N		⅞	22	22.22	22	ODF: +0.075/+0.185 ODM: -0.08/+0.08	173	17	37	22	28	32	0.3

[1] **Oversize connection**

Figure: Socket

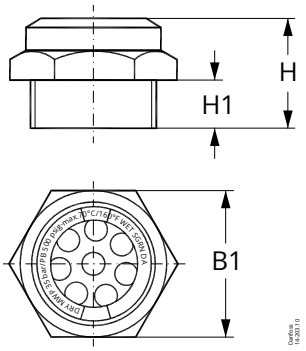

Table: Dimensions and weights for socket

Type	Connection type	Connection	H	H1	B1	Weight	Code no.
			[mm]	[mm]	[mm]	[kg]	
SGR / SGRN	G thread	G ½ in	31	19	32	0.08	014-0180
SGP ½ RN			33	19	32	0.08	014L0180
SGR		G ¾ in	23	10	32	0.08	014-0004
SGP ¾ RX			24	10	32	0.07	014L0004
SGR / SGRN	NPT	½ – 14 NPT	30	18	27	0.06	014-0002 014-0006
SGP ½ RX / SGP ½ RN			31	18	27	0.07	014L0002 014L0006
SGR		¾ – 14 NPT	31	18	32	0.08	014-0005
SGP ¾ RX			32	18	32	0.09	014L0005
SGP 20 RN	M thread	M20 x 1.5	26	13	27	0.06	014L1601
SGR / SGRN		M24 × 1	28	15	32	0.07	014-1066 014-1155
SGP 24 RX / SGP 24 RN			29	15	32	0.08	014L1066 014L1155

Figure: Saddle

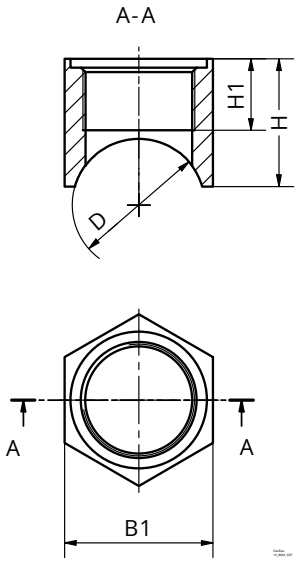

Table: Dimensions and weights for saddle

Connection	Tube connection D	H	H1	B1	Weight
	[in]	[mm]	[mm]	[mm]	[kg]
M20x1.5	1 – ⅛	21.5	12	27	0.051
M20x1.5	1 – ⅜	23	12	27	0.054
M24x1	⅞	27.5	15.4	32	0.052
M24x1	1 – ⅛	27.5	15.4	32	0.079
M24x1	1 – ⅜	27.5	15.4	32	0.085
M24x1	1 – ⅝	27.5	15.4	32	0.086
M24x1	2 – ⅛	27.5	15.4	32	0.094

Connections

SG/SGP can be provided with flare, solder ODF/ODF or ODF/ODM and socket version in a wide variety of connection sizes. Solder versions are with extended ends copper connections. For details on availability, see Ordering section.

Table: Connection types

Type	Indicator	Flare ext. × ext.	Flare ext. × int.	Face Seal ext. × int.	Solder ODF × ODF	Solder ODF × ODM	Socket	Saddle
SGP	Without Indicator		–	–		–		
		⅜ in			½ in ⅝ in & 16 mm ⅞ in		G ¾ in ½ – 14 NPT ¾ – 14 NPT M24 X 1	**M20 x 1.5** 1 ⅛ in 1 ⅜ in **M24 x 1** ⅞ in 1 ⅛ in 1 ⅜ in 1 ⅝ in 2 ⅛ in
	N/I type indicator							
		¼ in ⅜ in ½ in ⅝ in ¾ in	¼ in ⅜ in ½ in ⅝ in ¾ in	⅜ in	¼ in & 6 mm ⅜ in & 10 mm ½ in & 12 mm ⅝ in & 16 mm 18 mm ¾ in & 19 mm ⅞ in & 22 mm 1 ⅛ in	¼ in ⅜ in & 10 mm ½ in ⅝ in & 16 mm ⅞ in & 22 mm	G ½ in ½ – 14 NPT M20 X 1.5 M24 X 1	

Certificates, declarations and approvals

The list contains all certificates, declarations, and approvals for this product type. Individual code number may have some or all of these approvals, and certain local approvals may not appear on the list.

When you click on the link you will be directed to the latest version of the 'Declaration of Conformity'. Products developed and sold before this date of issue conform to the directives/standards in force at the time of their sale.

Approval type	Title	Issuer	Approval topic
Mechanical Safety Certificate	UL SA6525	UL - Underwriters Laboratories inc.	
Pressure Safety Certificate	TSSA CRN 0F24203.5123467890TNY	TSSA - Technical Standards & Safety Authority	Pressure
Manufacturer's Declaration	Danfoss MD 033F4010	Danfoss	EU RoHS
Export Control Declaration	Sight Glass	Danfoss	
Manufacturer's Declaration	Danfoss MD 033F4017.AF	Danfoss	
Manufacturer's Declaration	Danfoss MD 033F4006 AC	Danfoss	China RoHS
Manufacturer's Declaration	Danfoss MD 033F4001.AM	Danfoss	PED, Pressure, EU RoHS
EU Declaration	EU DOC PL01 Packaging	Danfoss	Packaging

Contact details

Online support

Danfoss offers a wide range of support along with our products, including digital information, software, mobile apps and expert guidance. See the possibilities below.

The Danfoss Design center

Discover the Design Center, our advanced digital platform that streamlines product selection. With integrated tools and enhanced type pages, it's simpler than ever to access product information and documentation, and to select the right products. Check the availability of Danfoss products at partner locations and enjoy seamless transitions from selection to purchase with our basket-to-basket functionality. Whether you're buying from our distributors or directly from the Product Store, the Design Center simplifies your experience. Learn more at: designcenter.danfoss.com.

The Danfoss product store

The Danfoss Product Store is a one-stop shop available 24/7 for our customers, no matter where you are in the world or what area of industry you work in. Browse our catalog, check product details and documentation, view your prices and product availability, and quickly finalize your purchase. Start browsing at: store.danfoss.com.

Danfoss Partner Portal/Product Data tool

Designed to support you with easy access to product data extracts, essential resources, tools, and information. The Partner Portal provides a centralized hub for product documentation, training materials, marketing assets, and technical support, ensuring you have everything you need to succeed and grow your business with Danfoss. The Partner Portal is available 24/7 at: partner.danfoss.com and is ready to support your business.

Find technical documentation

Find technical documentation you need to get your project up running. Get direct access to our official collection of data sheets, certificates and declarations, manuals and guides, 3D models and drawings, case stories, brochures, and much more. Start searching now at: documentation.danfoss.com.

Danfoss Learning

Danfoss Learning is a free online learning platform. It features courses and materials specifically designed to help engineers, installers, service technicians, and wholesalers better understand the products, applications industry topics, and trends that will help you do your job better. Find your local Danfoss website here: learning.danfoss.com.

Get local information and support

Local Danfoss websites are the main sources for help and information about our company and products. Find product availability, get the latest reginal news, or connect with a nearby expert - all in your own language. Find your local Danfoss website here: danfoss.com.

Danfoss A/S

Climate Solutions . danfoss.com . +45 7488 2222

Any information, including, but not limited to information on selection of product, its application or use, product design, weight, dimensions, capacity or any other technical data in product manuals, catalogues description, advertisements, etc. and whether made available in writing, orally, electronically, online or via download, shall be considered informative, and is only binding if and to the extent, explicit reference is made in a quotation or order confirmation. Danfoss cannot accept any responsibility for possible errors in catalogues, brochures, videos and other material. Danfoss reserves the right to alter its products without notice. This also applies to products ordered but not delivered provided that such alterations can be made without changes to form, fit or function of the products. All trademarks in this material are property of Danfoss A/S or Danfoss group companies. Danfoss and the Danfoss logo are trademarks of Danfoss A/S. All rights reserved.