ENGINEERING
TOMORROW

Application guidelines

Danfoss scroll compressors
SH - In parallel installation

50 Hz - 60 Hz - R410A



http://cc.danfoss.com

General overview 5
Benefits 5
Scope 5
Design challenge 5

Oil management concept 7
Static systems 7

Technical specifications 9
Motor supply 10
Compressor ambient temperature 10
Operating envelope 10

Operating conditions 10
Discharge temperature protection 11
High and low pressure protection 11
Cycle rate limit 11
Essential piping design considerations 12
Expansion device 12

System design recommendations 12
Refrigerant charge limits 13
Crankcase heater 13
External check valve 13
Required tests 14
Defrost cycle logic 14

Specific application recommendations 14
Running sound level 15
Sound generation in a refrigeration or air conditioning system 15

Sound and vibration management 15
Compressor sound radiation 16
Mechanical vibrations 16
Gas pulsation 16
Ordering information 17

Code number information 17
Operation principle 18

Tandem units SH182 to SH970 18
Composition of tandem 19

Tandem units SH182-212-242-282-322 . 19
Compressor mounting 20
Oil equalisation connection 20
Composition of the kit 20
Composition of tandem 21
Compressor mounting 21

Tandem units SH195-210-230 21
Oil equalisation connection 22
Suction washer 22
Composition of the kit 22
Composition of tandem 23
Compressor mounting 23

Tandem units SH260-281-301 23
Oil equalisation connection 24
Suction washer 24
Composition of the kit 24
Composition of tandem 25
Compressor mounting 25

Tandem units SH304-324-345 25
Oil equalisation connection 26
Suction washer 26
Composition of the kit 26
Composition of tandem 27
Oil equalisation connection 27

Tandem units SH360-482-590-760 27
Composition of tandem 28
Compressor mounting 28
Oil equalisation connection 28

Tandem units SH368 28
Composition of the kit 29
Composition of tandem 30
Suction washer 30

Tandem units SH420-535-675 30
Composition of tandem 31
Oil equalisation connection 31

Tandem units SH475-560 31
Composition of tandem 32
Suction washer 32

Tandem units SH620 32
Operation principle 33

Trio units SH552 33
Composition of trio 34
Compressor mounting 35
Oil equalisation connection 35
Suction washer 35
Composition of the kit 36
Operation principle 37

Trio units SH550 to SH1455 37
Composition of trio 38
Suction washer 38

Trio units SH550-720-885-1140 left suction 38
Composition of trio 39
Suction washer 39

Trio units SH550-720-885 right suction .. 39
Composition of trio 40

Trio units SH1140 right suction 40
Tandem models 41

Suction washer selection 41
Trio models 42
Compressor position and suction header side .. 42
Handling 43
Compressor mounting 43
Tightening torques 43

Installation and service 43
Wiring and rotation direction 44
Oil level 44
Failure analysis 44
Oil equalisation connection 44

Accessories 45

Benefits

A parallel compressor installation refers to a system of interconnected compressors with a common suction line and common discharge line. The technique of mounting compressors in parallel, also called manifolding, has several benefits.

The main reason is reduced operating cost through greater control of capacity and power consumption. This is achieved by staggering compressor switch-on sequences that allow the parallel system to match its power with the capacity needed.

A second reason for manifolding is improved part load efficiency. In a parallel installation the individual compressor(s) can be switched off while the other compressor(s) keep operating at 100% load. Therefore the part load efficiency is very near the full load efficiency. Conventional fixed speed compressor unloading methods impose a serious penalty for part load efficiency, mainly at low load operation.

Third, working with parallel systems allows for standardisation of compressors. As an example, the capacity range 10, 15, 20, 25 and 30 Tons can be covered with 5 individual compressors. But the same needs can be covered with only a 10 Tons and a 15 Tons model mounted in parallel, thus reducing the number of different compressor model to be stocked from 5 to 2.

Scope

These application guidelines describe the operating characteristics, design features and application requirements for the Danfoss SH scroll compressor in air conditioning and heat pump applications. The guidelines are not valid for refrigeration applications, which require dedicated compressors and more specific installations precautions.

To ensure proper parallel installation and running conditions, the following recommendations must be followed: it is essential to respect all instructions given in these guidelines, the instruction leaflet delivered with each compressor and the Selection and Application Guidelines for single compressors.

For additional system components related to specific application requirements, the supplier recommendations must always be respected.

Design challenge

Parallel systems have to ensure correct compressor operation, oil management and reliability, which requires evaluation and testing.

Oil equalisation

Suction gas in a hermetic compressor flows via the oil sump which makes it more difficult to maintain equal pressure in the sumps of parallel compressors. Since oil equalisation usually depends on equal sump pressures this is a point of special attention. Danfoss Commercial Compressors has developed specially adapted oil equalisation systems which ensure proper oil balancing between the compressors but it is always recommended to carry out some tests to validate it in the system (cf specific test recommendation).

Interconnecting piping design

This is an area where the manufacturer can use its research and testing capabilities to the users benefits. All factory designed parallel systems pass the critical 500 hours run test to qualify the piping configuration. This is not easily achieved with "field" erected systems which are often affected by infancy problems such as pipe vibrations, noise or ultimately pipe ruptures.

Using factory designed and tested parallel systems guarantees predictable reliability.

Compressor sequence

The operating sequence should be arranged in such way that the running time of the compressors is equalised as much as possible.

Application Guidelines	General overview	
Cycling	As a part of the design and development process at Danfoss Commercial Compressors it is verified that oil management and piping resistance meet engineering specifications at any cycling frequency.	The system must be designed in a way that guarantees a minimum compressor running time of 2 minutes to provide sufficient motor cooling after its start and a proper oil return. Note that the oil return may vary as it is a function of the system design.
Cost effectiveness and serviceability	In today's business climate, machine simplicity and low cost are main requirements. Danfoss SH scroll tandem and trio configurations are compact designs but they ensure easy	maintenance and service because refrigeration circuit connections, oil change, compressor wiring and compressor replacement are taken into account from the earliest design stage.
Application envelope	The domain of application, the types of refrigerant are evaluated to meet the	requirements of the intended applications.
Oil return	There is one last challenge which falls under the responsibility of the system designers and end users: proper oil return from the circuit.	Whatever the design of the parallel compressor system, good oil return from the circuit is prerequisite for the success of the equipment.

As mentioned before, one of the challenges of manifolding is oil management. To ensure suitable oil distribution, the static system as described hereafter is used for SH compressors.

Static systems

This is one of the most simple and cheapest ways of manifolding compressors. Compressor sumps and low pressure shells are interconnected. An interconnecting pipe, on the lower part of the compressor (below the oil level), ensures oil balancing. The suction header design is critical, as it ensures a pressure drop balancing and equal distribution of oil returning from the system when all compressors are running.

The success of such a system relies very much on the sizing of the pipe work, small differences in sump pressure can result in significant oil level variations.

This system is limited to three compressors in parallel, and needs perfect suction tube balancing.

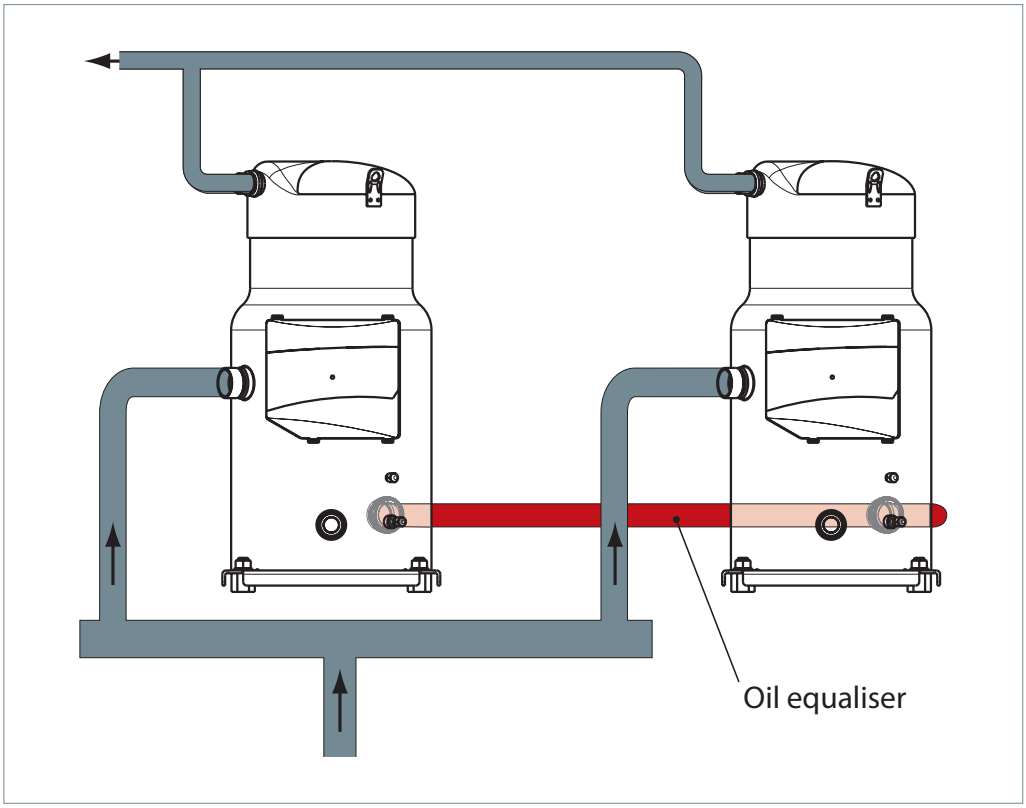

Please note that the SH large range has recently changed and is now fitted with a baseplate which allows the compressor to be fixed directly on the rail for parallel mounting.

In case of replacement of a SH compressor on an existing manifold it will remain necessary to use the rigid spacers (Triangle spacer kit 120Z0495 to be ordered separately).

Regarding the SH485, this model has been discontinued and replaced by the DSH485 compressor.

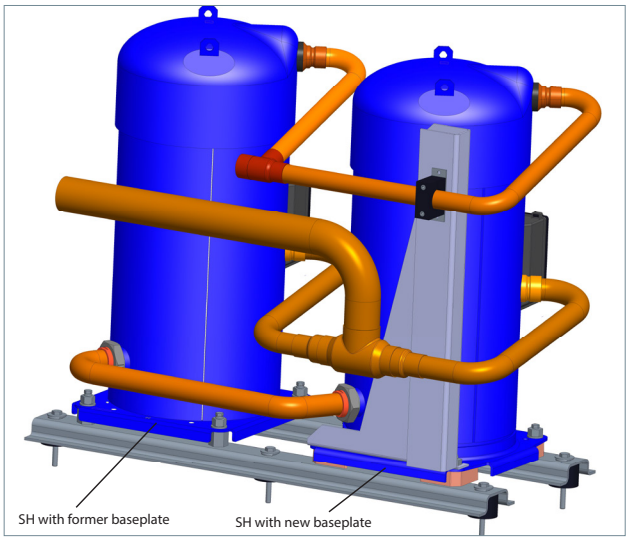

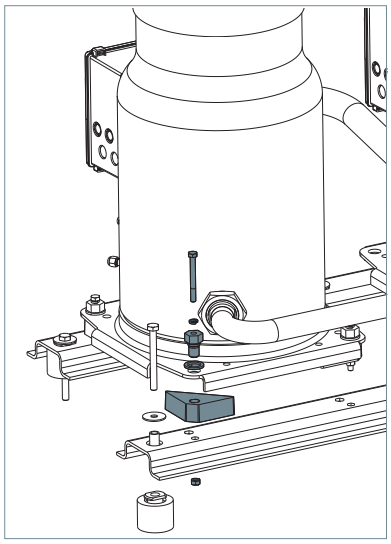

The tandem/trio configurations associated with this SH485 compressor are no longer present in this document. For the manifold mounting recommendations for this 40 Ton compressor you should consult the DSH guideline instead.

	Model		Nominal tons 60 Hz TR	Nominal cooling capacity W	Nominal cooling capacity Btu/h	Power input kW	Max operating current ① A	Efficiency COP W/W	Efficiency E.E.R. Btu/h /W	Sound power dB(A)	Displacement ② m3/h
50 Hz	Tandem	SH182-4	15	44200	150900	14.37	32.2	3.08	10.51	73.0	30.76
		SH195-4	16	48700	166200	15.66	35.6	3.11	10.61	73.8	33.39
		SH210-4	17.5	51800	176800	16.65	37.2	3.11	10.61	74.4	35.72
		SH212-4	17.5	53100	181200	16.95	39.1	3.14	10.72	74.5	36.02
		SH230-4	19	56500	192800	17.76	40.5	3.18	10.85	74.4	38.51
		SH242-4	20	59400	202700	18.92	42.3	3.14	10.72	75.5	40.68
		SH260-4	21.5	64100	218800	20.04	45.5	3.20	10.92	75.5	43.47
		SH281-4	23.5	68100	232400	21.61	47.8	3.15	10.75	76.0	46.74
		SH282-4	23.5	68800	234800	21.15	48.7	3.25	11.09	75.5	46.25
		SH301-4	25	72800	248500	22.72	51.0	3.21	10.96	76.0	49.52
		SH304-4	25.5	73900	252200	23.19	52.0	3.19	10.89	76.9	49.97
		SH322-4	27	76900	262500	24.29	53.3	3.17	10.82	76.5	52.79
		SH324-4	27	78700	268600	24.31	55.2	3.24	11.06	76.9	52.76
		SH345-4	29	82700	282300	25.88	57.5	3.20	10.92	77.3	56.03
		SH360-4	30	88200	301000	27.73	60.9	3.18	10.85	83.0	59.23
		SH368-4	30.5	88500	302000	27.46	61.7	3.22	10.99	78.0	59.26
		SH420-4	35	103300	352600	32.37	70.5	3.19	10.89	84.1	69.22
		SH475-4 *	39.5	116600	398000	36.37	79.7	3.21	10.96	84.1	77.67
		SH482-4	40	118400	404100	37.00	80.1	3.20	10.92	85.0	79.20
		SH535-4 *	44.5	131700	449500	41.01	89.3	3.21	10.96	85.0	87.66
		SH560-4	46.5	133800	456700	42.05	92.0	3.18	10.85	84.8	89.64
		SH590-4 *	49	145100	495200	45.01	98.6	3.22	10.99	85.0	96.12
		SH620-4	51.5	148800	507800	46.68	101.6	3.19	10.89	85.5	99.63
		SH675-4 *	56.5	162200	553600	50.69	110.8	3.20	10.92	85.5	108.09
		SH760-4	63.5	179300	611900	56.36	123.0	3.18	10.85	86.0	120.06
	Trio	SH550-4	46	130600	445700	41.60	91.3	3.14	10.72	92.8	88.80
		SH552-4	46	132300	451600	41.19	94.1	3.21	10.96	80	88.80
		SH720-4	60	175200	598000	55.51	120.2	3.16	10.78	86.8	118.81
		SH885-4 *	74	219600	749500	67.53	148.9	3.25	11.09	86.8	144.18
		SH1140-4	95	265400	905800	84.54	184.6	3.14	10.72	87.8	180.09
60 Hz	Tandem	SH182-4	15	53700	183300	17.14	33.6	3.13	10.68	75.0	37.13
		SH195-4	16	58700	200300	18.53	36.1	3.17	10.82	76.1	40.30
		SH210-4	17.5	63300	216000	19.82	38.2	3.19	10.89	76.8	43.11
		SH212-4	17.5	63600	217100	19.91	38.6	3.19	10.89	77.0	43.47
		SH230-4	19	68800	234800	21.34	41.3	3.22	10.99	77.5	46.47
		SH242-4	20	72800	248500	22.49	42.8	3.24	11.06	78.0	49.10
		SH260-4	21.5	78300	267200	24.01	45.9	3.26	11.13	78.5	52.46
		SH281-4	23.5	83100	283600	25.68	48.4	3.24	11.06	79.1	56.41
		SH282-4	23.5	83800	286000	25.53	49.0	3.28	11.19	79.0	55.82
		SH301-4	25	88600	302400	27.20	51.5	3.26	11.13	79.5	59.77
		SH304-4	25.5	89900	306800	27.70	52.8	3.25	11.09	79.8	60.31
		SH322-4	27	93500	319100	28.86	54.0	3.24	11.06	80.0	63.71
		SH324-4	27	95400	325600	29.22	55.9	3.27	11.16	80.1	63.67
		SH345-4	29	100200	342000	30.88	58.4	3.25	11.09	80.5	67.62
		SH360-4	30	107600	367200	33.17	60.4	3.24	11.06	88.0	71.48
		SH368-4	30.5	107000	365200	32.90	62.8	3.25	11.09	81.0	71.53
		SH420-4	35	125400	428000	38.68	71.1	3.24	11.06	88.5	83.54
		SH475-4 *	39.5	141500	482900	43.79	81.0	3.23	11.02	88.5	93.74
		SH482-4	40	143100	488400	44.20	81.8	3.24	11.06	89.0	95.59
		SH535-4 *	44.5	159300	543700	49.31	91.7	3.23	11.02	89.0	105.80
		SH560-4	46.5	162400	554300	50.58	93.3	3.21	10.96	89.1	108.19
		SH590-4 *	49	175400	598600	54.41	101.5	3.22	10.99	89.0	116.00
		SH620-4	51.5	180200	615000	56.09	104.0	3.21	10.96	89.5	120.25
		SH675-4 *	56.5	196300	670000	61.20	113.9	3.21	10.96	89.5	130.45
		SH760-4	63.5	217300	741600	67.98	126.2	3.20	10.92	90.0	144.90
	Trio	SH550-4	46	159300	543700	49.75	90.6	3.20	10.92	89.8	107.10
		SH552-4	46	159800	545500	49.35	95.9	3.24	11.05	83	107.30
		SH720-4	60	211800	722900	66.30	122.7	3.20	10.92	90.8	143.39
		SH885-4 *	74	265500	906100	81.62	152.3	3.25	11.09	90.8	174.01
		SH1140-4	95	321600	1097600	101.98	189.4	3.15	10.75	91.8	217.35

① for +15°C evap. temp; +68°C cond. temp under nominal voltage 400V-3-50Hz / 460V-3-60 Hz
② displacement at nominal speed: 2900 rpm at 50 Hz, 3500 rpm at 60 Hz

TR= Ton of Refrigeration
COP= Coefficient Of Performance
Rating conditions: SH compressors
Refrigerant: R410A
Frequency: 50 Hz / 60 Hz
Standard rating conditions: ARI standard
Evaporating temperature: 7.2 °C
Condensing temperature: 54.4 °C
Sub-cooling: 8.3 K
Superheat: 11.1 K

Subject to modification without prior notification.
Data given for code 4 compressor, for full data details and capacity tables refer to Online Datasheet Generator http://cc.danfoss.com
* SH295 replaces SH300. SH300 model remains available for after-market. Please refer to datasheets for technical details.

The scroll compressor application range is influenced by several parameters which need to be monitored for a safe and reliable operation. These parameters and the main recommendations for good practice and safety devices are explained hereunder.

- **Refrigerant and lubricants refer to FRCC. PC.007**
- **Motor supply**
- **Compressor ambient temperature**
- **Application envelope** (evaporating temperature, condensing temperature, return gas temperature)

Motor supply

SH scroll compressors can be operated at nominal voltages as indicated below. Under-voltage and over-voltage operation is allowed within the indicated voltage ranges. In case of risk of under-voltage operation, special attention must be paid to current draw.

		Motor voltage code 3	Motor voltage code 4	Motor voltage code 6	Motor voltage code 7	Motor voltage code 9
Nominal voltage	50 Hz	-	380-400 V - 3 ph 380-415 V - 3 ph *	230 V - 3 ph	500 V - 3 ph	-
Voltage range	50 Hz	-	342-440 V 342-457 V *	207 - 253 V	450 - 550 V	-
Nominal voltage	60 Hz	200-230 V - 3 ph	460 V - 3 ph	-	575 V - 3 ph	380 V - 3 ph
Voltage range	60 Hz	180 - 253 V	414 - 506 V	-	517 - 632 V	342 - 418 V

* SH295

Compressor ambient temperature

SH compressors can be applied from -35°C to 55°C ambient temperature for SH090-105-120-140-161-184 and 51°C ambient temperature for SH180-240-295-300-380. The compressors are designed as 100 % suction gas cooled without need for additional fan cooling. Ambient temperature has very little effect on the compressor performance.

Operating envelope

The parallel assemblies recommended design from Danfoss Commercial Compressors have been qualified to ensure there is no impact on the compressor operating envelopes. Consequently, the Danfoss scroll tandem and trio assemblies have the operating limits as shown below.

More details can be found in the Selection and Application Guidelines for Danfoss SH scroll compressors reference FRCC.PC.007.

R410A - Tandem: SH182 to 970 - Trio: SH550 to 1140

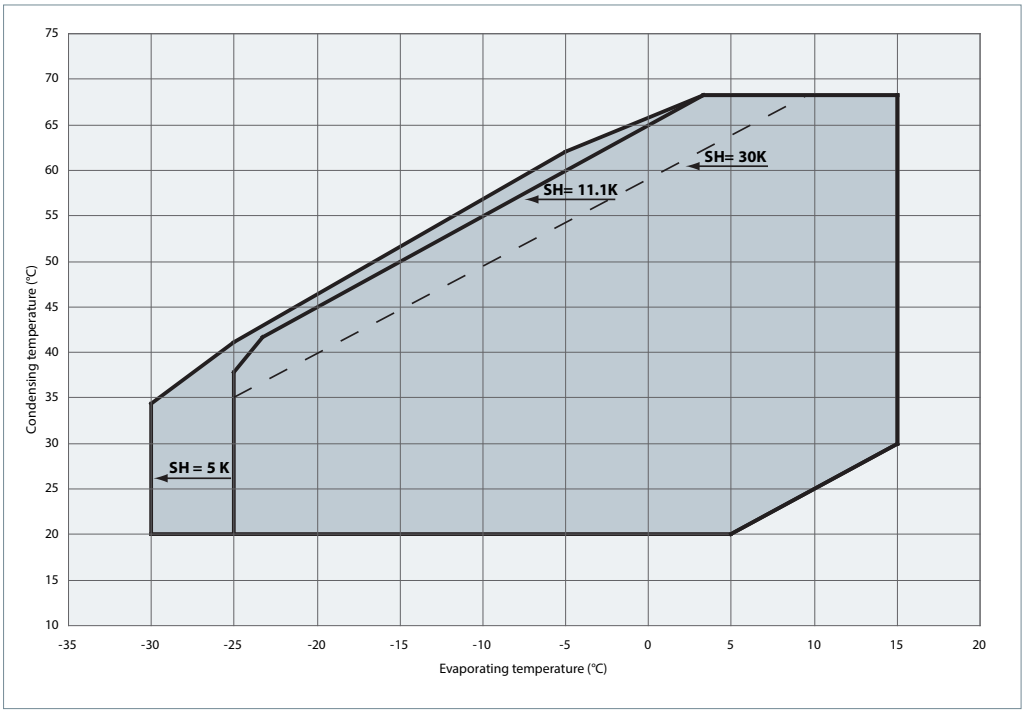

Application Guidelines	Operating conditions	
Discharge temperature protection	The discharge gas temperature of each compressor must not exceed 135°C. When DGT protection is required (if the high and low pressure switch settings do not protect compressor against operation beyond its specific application envelope and on heat pumps) each compressor must be equipped with a discharge thermostat kit (available in sections "accessories".)	When a safety switch trips due to one of discharge gas thermostat, the compressor must stop immediately and must not restart until the discharge temperature is back to normal and the safety switch is closed again. 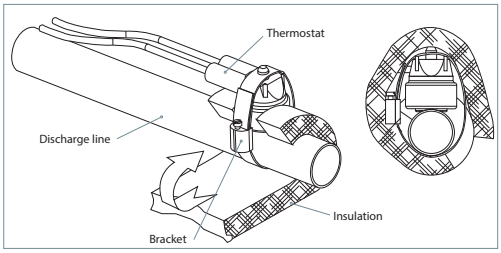
High and low pressure protection	The pump down pressure switch must have a set point slightly higher than the lowest compressor safety pressure switch set point. The compressor switch must never be bypassed and shall stop all the compressors. The high-pressure safety pressure switch shall stop all compressors. Please refer to Danfoss scroll compressors single application guidelines (FRCC.PC.007) for recommended settings.	Whenever possible (ie. PLC control) it is recommended to limit the possibilities of compressor auto-restart to less than 3 to 5 times during a period of 12 hours when caused low by LP safety switch settings.
Cycle rate limit	The system must be designed in a way that guarantees a minimum compressor running time of 2 minutes so as to provide for sufficient motor cooling after start-up along with proper oil return. Note that the oil return may vary since it depends upon system design.	There must be no more than 12 starts per hour; a number higher than 12 reduces the service life of the motor-compressor unit. If necessary, place an anti-short-cycle timer in the control circuit, then connected as shown in the wiring diagram in the Danfoss scroll compressors application guidelines. A three-minute (180-sec) time-out is recommended.

Please refer to the Selection and Application Guidelines for Danfoss SH scroll compressors reference FRCC.PC.007. for general system design recommendations that are valid for single compressors as well as for parallel systems.

Typical system requirements and recommendations for parallel installations are listed below.

Essential piping design considerations

All system components and piping must be designed for R410A pressure level and comply to releveant legislation about pressure equipment.

Proper piping practices should be employed to ensure adequate oil return, even under minimum load conditions with special consideration given to the size and slope of the tubing coming from the evaporator. Tubing returns from the evaporator should be designed so as to not trap oil and to prevent oil and refrigerant migration back to the compressor during off cycles. A double suction riser may be required for partial load operation if suction gas velocity is not sufficient to ensure proper oil return.
If the evaporator lies above the compressor, as is often the case in split or remote condenser systems, the addition of a pump-down cycle is strongly recommended. If a pump-down cycle is omitted, the suction line should have a loop at the evaporator outlet to prevent refrigerant from draining into the compressor during off-cycles.

If the evaporator was situated below the compressors, the suction riser must be trapped so as to prevent liquid refrigerant from collecting at the thermal bulb location.

When the condenser is mounted at a higher position than the compressors, a suitably sized "U"-shaped trap close to the compressors is necessary to prevent oil leaving the compressor from draining back to the discharge side of the compressors during off cycle. The upper loop also helps avoid liquid refrigerant from draining back to the compressor when stopped.

Piping should be designed with adequate three-dimensional flexibility. It should not be in contact with the surrounding structure, unless a proper tubing mount has been installed. This protection proves necessary to avoid excess vibration, which can ultimately result in connection or tube failure due to fatigue or wear from abrasion. Aside from tubing and connection damage, excess vibration may be transmitted to the surrounding structure and generate an unacceptable noise level within that structure as well (for more information on noise and vibration, see section "Sound and vibration management").

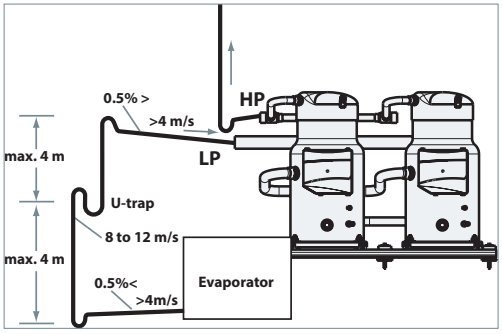

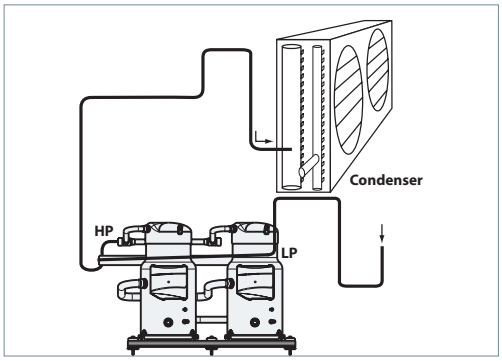

Expansion device

When the parallel installation is serving a single evaporator system the dimensioning of the expansion device (thermostatic or electronic) becomes critical and must be made in relation to both minimum and maximum capacity.
This will ensure correct superheat control in all situations, with the minimum of 5K superheat at the compressor suction. The expansion device should be sized to ensure proper control of the refrigerant flow into the evaporator. An oversized valve may result in erratic control. Proper selection could imply slightly under-sized expansion valve at full load. This consideration is especially important in manifolded units where low load conditions may require the frequent cycling of compressors. This can lead to liquid refrigerant entering the compressor if the expansion valve does not provide stable refrigerant superheat control under varying loads. The superheat setting of the expansion device should be sufficient to ensure proper superheat levels during low loading periods.
A minimum of 5K stable superheat is required.
In addition, the refrigerant charge should be sufficient to ensure proper sub cooling within the condenser so as to avoid the risk of flashing in the liquid line before the expansion device.

Refrigerant charge limits

Danfoss SH compressors can tolerate liquid refrigerant up to a certain extend without major problems. However, excessive liquid refrigerant in the compressor is always unfavourable for service life. Besides, the installation cooling capacity may be reduced because of the evaporation taking place in the compressor and/or the suction line instead of the evaporator. System design must be such that the amount of liquid refrigerant in the compressor is limited. In this respect, follow the guidelines given in the section: "Essential piping design recommendations" in priority.

Use the tables below to quickly evaluate the required compressor protection in relation with the system charge and the application.

Compressor models		Refrigerant charge limit (kg)
Tandem units	SH182	8.0
	SH195-210-230	8.5
	SH212-242-260-281-282-301-304-322-324-345-368	10.5
	SH360-420-475-482-535-590	17.5
	SH560-620-675-760	17.5
Trio units	SH552	13.5
	SH550-720-885	23
	SH1140	24.5

	BELOW charge limit	ABOVE charge limit
Cooling only systems, Packaged units	✓ No test or additional safeties required	REQ Refrigerant migration and floodback test or suction accumulator REQ Sump heater
Cooling only systems with remote condensor and split system units	REC Refrigerant migration and floodback test REC Sump heater, because full system charge is not definable (risk of overcharging)	REQ Refrigerant migration and floodback test or suction accumulator REQ Sump heater REC Liquid receiver (in association with LLSV and pump down)
Reversible heat pump system	REQ Specific tests for repetitive floodback or suction accumulator REQ Sump heater REQ Defrost test	

REC Recommended **REQ** Required ✓ No test or additional safeties required

More detailed information can be found in the paragraphs system design recommendation of FRCC.PC.007.
The accumulator should be sized for more than 50% of the total system charge.

Crankcase heater

The crankcase heaters are designed to protect the compressor against off cycle migration of refrigerant. When the compressor is idle, the oil temperature in the sump of the compressor must be maintained at no lower than 10 K above the saturation temperature of the refrigerant on the low-pressure side. This requirement ensures that the liquid refrigerant is not accumulating in the sump. A sump heater is only effective if capable of sustaining this level of temperature difference.

Since the total system charge may be undefined, a sump heater is recommended on all stand-alone compressors and split systems. In addition, any system containing a refrigerant charge in excess of the maximum recommended system charge for compressors requires a crankcase heater. A crankcase heater is also required on all reversible cycle applications.

The heater must be energized for a minimum of 6 hours before initial start-up (compressor service valves opened) and must be energized 15 minutes after all compressors have stopped and then whenever compressors are off. Provide separate electrical supply for the heaters so that they remain energized even when the machine is out of service (eg. seasonal shutdown).

Crankcase heater accessories are available from Danfoss (see section "Accessories").

External check valve

Large SH (SH180 to 380) tandem and trio assemblies do not require the installation of an external check valve as each compressor comes equipped with a factory mounted internal check valve, which prevents the compressor running backwards when stopped while others are in operation.

Specific application recommendations are fully described in Selection and Application Guideline (FRCC.PC.007). Please refer to this document.

Additionaly, specific tests and defrost cycle logic are required.

Required tests

The following tests should be done to validate effective operation and oil equalisation of compressors in parallel installation at any operating conditions of final application.

Test conditions

Tests shall be done at three points in final application envelope:

- ARI-based conditions
- Low evaporation (SH10K): low flow rate / pure oil/ low oil level
- High load (SH10K): high flow rate/ diluted oil/ high oil level

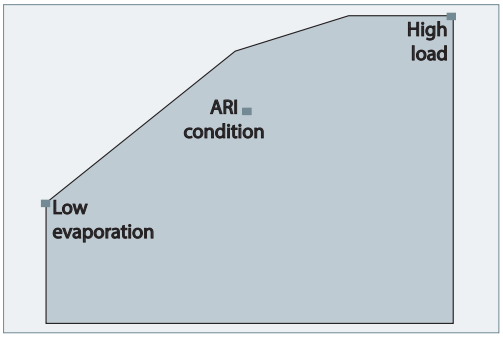

Test sequences

- Continuous for all compressors: 100% charge (all compressors continuous running)
- Continuous with partial charge: all partial charges configuration must be tested
- On/Off test: after 2 minutes shutdown of any compressor, the oil level has to retrieve a proper oil level within 1 minute when the compressor is switched back on.
- Transient 100% load: in transient condition such as end of defrost with temporary liquid flood back, check that oil return to normal level.

Oil level criteria

- The oil level of running compressors must be visible or full in the sight glass of running compressors at all operating conditions described before.
- The oil level of idle compressors may disappear in the oil sight glass.
- The oil level must retrieve a visible level in all compressors after the unit is stopped.
- Oil level top up might be necessary to retrieve a visible oil level in the sight glasses. Always use a Danfoss oil from new can (see section accessories).

Defrost cycle logic

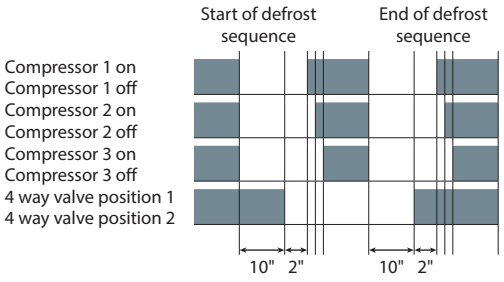

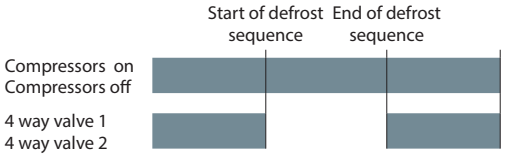

In order to limit liquid amount handled per compressor when beginning & ending defrost, one of the 2 defrost cycle logics are required:

- stop all compressors before moving the 4 way valve:
  - first stop compressors
  - wait for 10 seconds
  - move the 4 way valve
  - wait for 2 seconds
  - restart the compressors with a max. 0.5 second delay between 2 successive starts

or

- keep all compressors running during defrost cycle

Defrost cycle logic must respect all system components recommendations, in particular 4 way valve Max. Operating Pressure Differential. EXV can also be opened when compressors are stopped and before 4 way valve is moving in order to decrease pressure difference. Opening degree and time have to be set in order to keep a minimum pressure for 4 way valve moving.

To ensure compressor reliability, the 4-way valve must not reverse when the compressor is stopped due to heating or cooling demand (stop on thermostat).

Running sound level

The global sound level of "n" identical compressors is:

$$L_{GLOBAL} = Li + 10\ Log_{10}\ n$$

Example for the trio
SH720 = 3 x SH240 (50Hz)
L_{SH240} = 82dB(A)
$L_{SH720} = 82 + 10\ Log_{10} 3 = 86.8$dB(A)

The global sound level of "n" compressors with respectively L_i sound level is:

$$L_{GLOBAL} = 10\ Log_{10}\left(\sum_{i=1}^{i=n} 10^{0.1*Li}\right)$$

Example for the tandem
SH324 = SH140 + SH184 (50Hz)
L_{SH140} = 72.5dB(A), L_{SH184} = 75dB(A)
$L_{SH324} = 10\ Log_{10}\ (10^{0.1x72.5} + 10^{0.1x75}) = 76.9$dB(A)

	Model	50Hz	60Hz
Tandem	SH182	73.0	75.0
	SH195	73.8	76.1
	SH210	74.4	76.8
	SH212	74.5	77.0
	SH230	74.4	77.5
	SH242	75.5	78.0
	SH260	75.5	78.5
	SH281	76.0	79.1
	SH282	75.5	79.0
	SH301	76.0	79.5
	SH304	76.9	79.8
	SH322	76.5	80.0
	SH324	76.9	80.1
	SH345	77.3	80.5
	SH360	83.0	88.0
	SH368	78.0	81.0
	SH420	84.1	88.5
	SH475	84.1	88.5
	SH482	85.0	89.0
	SH535	85.0	89.0
	SH560	84.8	89.1
	SH590	85.0	89.0
	SH620	85.5	89.5
	SH675	85.5	89.5
	SH760	86.0	90.0
Trio	SH550	84.8	89.8
	SH552	80.0	83.0
	SH720	86.8	90.8
	SH885	86.8	90.8
	SH1140	87.8	91.8

Sound power are given at rated ARI conditions measured in free space.

Sound generation in a refrigeration or air conditioning system

Typical sound and vibration in Refrigeration and Air-Conditioning systems encountered by design and service engineers may be broken down into the following three source categories.

Sound radiation: This generally takes an airborne path.
Mechanical vibrations: These generally extend along the parts of the unit and structure.
Gas pulsation: This tends to travel through the cooling medium, i.e. the refrigerant.

The following sections will focus on the causes and methods of mitigation for each of the above sources.

Compressor sound radiation

For sound radiating from the compressors, the emission path is airborne and the sound waves are travelling directly from the machine in all directions.

The Danfoss SH scroll compressor is designed to be quiet and the frequency of the sound generated is pushed into the higher ranges, which not only are easier to reduce but also do not generate the penetrating power of lower-frequency sound.

Use of sound-insulation materials on the inside of unit panels is an effective means of substantially reducing the sound being transmitted to the outside. Ensure that no components capable of transmitting sound / vibration within the unit come into direct contact with any non-insulated parts on the walls of the unit.

Because of the scroll compressors models unique design of a full-suction gas-cooled motor, compressor body insulation across its entire operating range is possible. Acoustic hoods are available from Danfoss Commercial Compressors as accessories. They have been developed to meet specific extra low noise requirement. They incorporate sound proofing materials and offer excellent high and low frequency attenuation. These hoods are quick and easy to install and do not increase the overall size of the compressors to a great extend. Refer to section "Running sound level" for sound attenuation and code numbers.

Mechanical vibrations

Vibration isolation constitutes the primary method for controlling structural vibration. Danfoss tandem and trio scroll compressors have been designed to produce minimal vibration during operations. To reduce transmission of vibrations, rubber mounting grommets are used, to mount the unit frame in the system. In addition, it is extremely important that the frame supporting the mounted compressors be of sufficient mass and stiffness to help dampen any residual vibration potentially transmitted to the frame. For further information on mounting requirements, please refer to the section on mounting assembly.

For tandem and trio SH180 to 485, depending on applications, it might be necessary to reach higher natural frequencies. Then the standard rigid mounting should be replaced by accessory code number 120Z0495.

The tubing should be designed so as to both reduce the transmission of vibrations to other structures and withstand vibration without incurring any damage. Tubing should also be designed for three-dimensional flexibility. For more information on piping design, please see the section entitled "Essential piping design considerations".

Danfoss tandem and trio configuration drawings are available, the drawings must always be respected. If any change of piping or rails, in order to avoid resonance, piping and rails must be checked carefully to move natural frequency away from operating frequency of 50Hz and multiples of 50Hz (or 60Hz and multiples of 60Hz).

A piping support can be added when necessary. For further information, please contact Danfoss, technical support.

Gas pulsation

Manifolded compressors are equivalents to lagged sources of gas pulsation. Therefore pulse level can vary during time. On heat pump installations and other installations where the pressure ratio lies beyond the typical range, testing should be conducted under all expected conditions and operating configurations to ensure that minimum gas pulsation is present. If an unacceptable level is identified, a discharge muffler with the appropriate resonant volume and mass should be installed. This information can be obtained from the component manufacturer.

Ordering information

To build a complete tandem, one must order the 2 compressors and the Tandem kit see codes "Tandem units" part.

To build a trio, one must order 3 compressors and the trio kit see codes "Trio units" part.

For example : Tandem SH210
- **Compressor 1** : SH090 Code number 120H0004 (Industrial pack)
- **Compressor 2** : SH120 Code number 120H0014 (Industrial pack)
- **Tandem kit** : SH210 Code number 7777043.

Danfoss SH scroll compressors can be ordered in either industrial packs or in single packs.

Please use the code numbers from below tables for ordering.

Refer of the FRCC.PC.007 for the packaging information.

Compressor model	Pack	Nbr	Connections	Motor protection	Code no.			
					3	4	7	9
					200-230/3/60	460/3/60 400/3/50	575/3/60 500/3/50	380/3/60
SH090	Industrial	8	Brazed	Internal	120H0002	120H0004	-	120H0010
	Single	1	Brazed	Internal	120H0001	120H0003	120H0007	120H0009
SH105	Industrial	8	Brazed	Internal	120H0210	120H0212	-	120H0218
	Single	1	Brazed	Internal	120H0209	120H0211	120H0215	120H0217
SH120	Industrial	8	Brazed	Internal	120H0012	120H0014	-	120H0020
	Single	1	Brazed	Internal	120H0011	120H0013	120H0017	120H0019
SH140	Industrial	8	Brazed	Internal	120H0200	120H0202	-	120H0208
	Single	1	Brazed	Internal	120H0199	120H0201	120H0205	120H0207
SH161	Industrial	8	Brazed	Internal	120H0022	120H0024	-	120H0030
	Single	1	Brazed	Internal	120H0021	120H0023	120H0027	120H0029
SH180	Industrial	6	Brazed	Module 24 V AC*	120H0266	120H0268	-	120H0272
			Brazed	Module 110-240 V*	120H0274	120H0276	-	120H0280
	Single	1	Brazed	Module 24 V AC*	120H0265	120H0267	120H0269	120H0271
			Brazed	Module 110-240 V*	120H0273	120H0275	120H0277	120H0279
SH184	Industrial	6	Brazed	Internal	120H0360	120H0362	-	120H0368
	Single	1	Brazed	Internal	120H0359	120H0361	120H0365	120H0367
SH240	Industrial	6	Brazed	Module 24 V AC*	120H0290	120H0292	-	120H0296
			Brazed	Module 110-240 V*	120H0298	120H0300	-	120H0304
	Single	1	Brazed	Module 24 V AC*	120H0289	120H0291	120H0293	120H0295
			Brazed	Module 110-240 V*	120H0297	120H0299	120H0301	120H0303
SH295	Industrial	6	Brazed	Module 24V AC*	120H0852	120H0826	-	120H0842
			Brazed	Module 110-240 V*	120H0854	120H0828	-	120H0844
	Single	1	Brazed	Module 24V AC*	120H0851	120H0825	120H0833	120H0841
			Brazed	Module 110-240 V*	120H0853	120H0827	120H0835	120H0843
SH380	Industrial	4	Brazed	Module 24 V AC*	-	120H0254	-	120H0262
			Brazed	Module 110-240 V*	-	120H0256	-	120H0264
	Single	1	Brazed	Module 24 V AC*	-	120H0253	120H0257	120H0261
			Brazed	Module 110-240 V*	-	120H0255	120H0259	120H0263

*Electronic motor protection, module located in terminal box

Operation principle

SH182 to SH760 tandems use the static system to balance the oil level between the compressors. Each of the compressors may run alone to provide proper capacity for part load operation. The system has been designed to ensure a precise pressure balancing between the sumps, facilitating the oil equalisation by gravity. The discharge line is shown with two tees, to indicate that both left and right side discharge header are possible.

Tandem model	Composition	Suction	Discharge	Oil equalisation	Kit tandem Code No	Outline drawing number	
						Left suction connection	Right suction connection
SH182	SH090 + SH090	1"3/8	1"3/8	7/8"	7777044	8556044P01	8556044P02
SH195	SH105 + SH090	1"5/8	1"3/8	7/8"	7777043	8556045P05	8556045P06
SH210	SH120 + SH090	1"5/8	1"3/8	7/8"	7777043	8556045P01	8556045P02
SH212	SH105 + SH105	1"5/8	1"3/8	7/8"	7777044	8556044P07	8556044P08
SH230	SH090 + SH140	1"5/8	1"3/8	7/8"	7777043	8556045P09	8556045P10
SH242	SH120 + SH120	1"5/8	1"3/8	7/8"	7777044	8556044P03	8556044P04
SH260	SH140 + SH120	1"5/8	1"3/8	7/8"	7777042	8556045P07	8556045P08
SH281	SH161 + SH120	1"5/8	1"3/8	7/8"	7777042	8556045P03	8556045P04
SH282	SH140 + SH140	1"5/8	1"3/8	7/8"	7777044	8556044P09	8556044P10
SH301	SH140 + SH161	1"5/8	1"3/8	7/8"	7777042	8556045P11	8556045P12
SH304	SH120 + SH184	1"5/8	1"3/8	1"1/8	7777052	8556052P07	8556052P08
SH322	SH161 + SH161	1"5/8	1"3/8	7/8"	7777044	8556044P05	8556044P06
SH324	SH140 + SH184	1"5/8	1"3/8	1"1/8	7777052	8556052P05	8556052P06
SH345	SH161 + SH184	1"5/8	1"3/8	1"1/8	7777052	8556052P03	8556052P04
SH360	SH180 + SH180	2"1/8	1"5/8	1"3/8	7777041	8556112	
SH368	SH184 + SH184	1"5/8	1"3/8	1"1/8	7777054	8556052P01	8556052P02
SH420	SH180 + SH240	2"1/8	1"5/8	1"3/8	7777037	8556228	
SH475	SH180 + SH295	2"1/8	1"5/8	1"3/8	7777038	8556228	
SH482	SH240 + SH240	2"1/8	1"5/8	1"3/8	7777041	8556228	
SH535	SH240 + SH295	2"1/8	1"5/8	1"3/8	7777037	8556228	
SH560	SH180 + SH380	2"1/8	1"5/8	1"3/8	7777038	8556222	
SH590	SH295 + SH295	2"1/8	1"5/8	1"3/8	7777041	8556228	
SH620	SH240 + SH380	2"1/8	1"5/8	1"3/8	7777048	8556222	
SH675	SH295 + SH380	2"1/8	1"5/8	1"3/8	7777037	8556222	
SH760	SH380 + SH380	2"1/8	1"5/8	1"3/8	7777041	8556117	

Composition of tandem

Tandem		SH182	SH212	SH242	SH282	SH322
Compressor 1	Model	SH090	SH105	SH120	SH140	SH161
	Code n° (1)	120H0004	120H0212	120H0014	120H0202	120H0024
Compressor 2	Model	SH090	SH105	SH120	SH140	SH161
	Code n° (1)	120H0004	120H0212	120H0014	120H0202	120H0024
Kit	Code n°	7777044				

(1): Example for the voltage code 4 (industrial pack). Refer to "code number information" part for other codes or single pack version

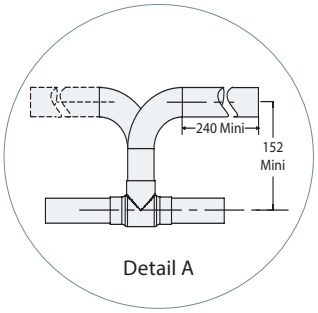

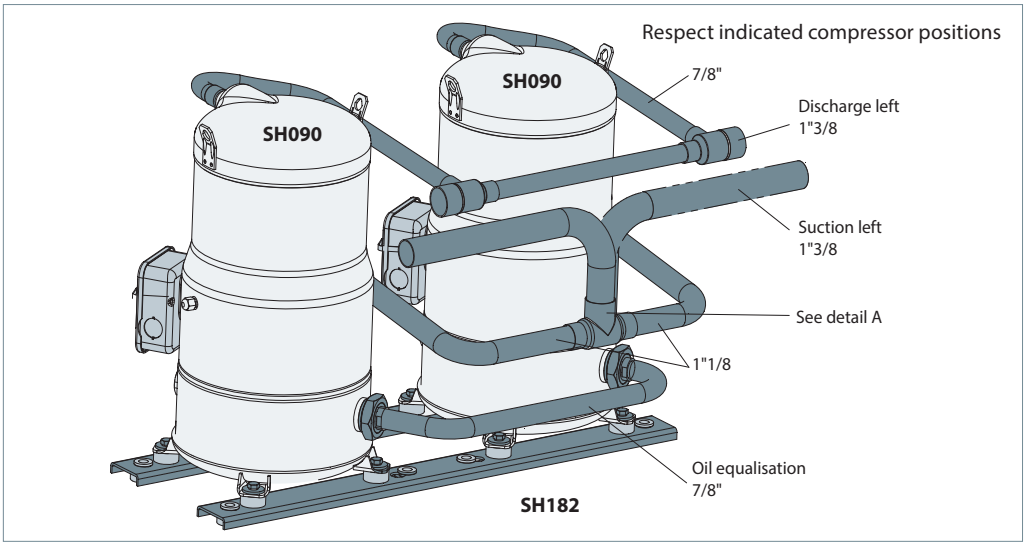

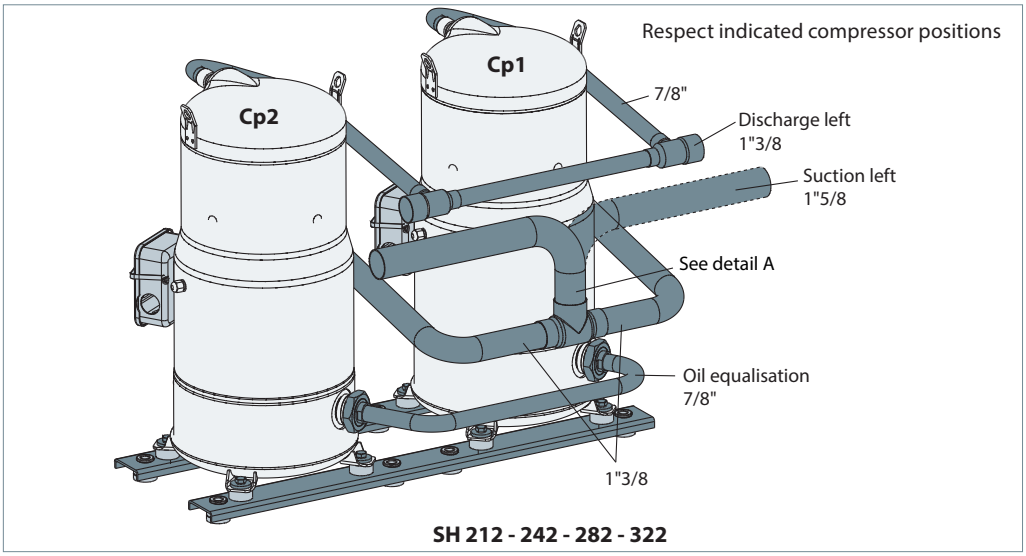

Compressor mounting

The tandem rail assembly is fixed on the unit frame using the flexible grommets supplied with the compressor. The compressors are fixed on the rails (not included) using the 4 mm flat washers ①, 14 mm rigid spacer ③, included in the "tandem kit" reference 7777044 (to be ordered with the compressors). An additional 7 mm rigid spacer ② must be placed under the rail grommets (see beside drawing).

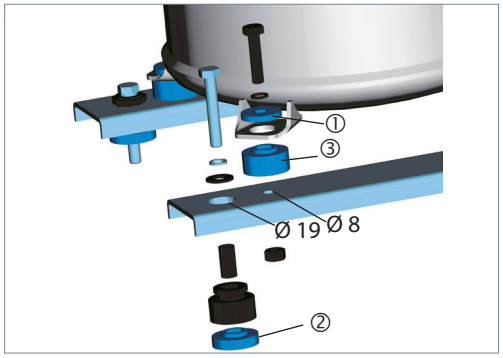

Supplied with the compressor
Included in 7777044 kit
Not supplied

Oil equalisation connection

The level of oil naturally balances by a pipe of 7/8".

The kit 7777044 includes 1"3/4 - 7/8" adaptator sleeves ④ and new Teflon seals ⑤ to connect the 7/8" equalisation pipe on 1"3/4 oil connectors.

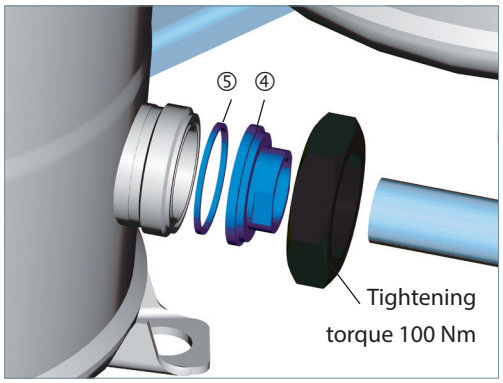

Composition of the kit

Kit code number 7777044

	Designation	Ref.	Qty.
①	Flat washer Thickness 4 mm	6301028P01	8
②	Rigid spacer Thickness 7 mm	5311629P01	8
③	Rigid spacer Thickness 14 mm	5311629P02	8
④	Equalisation sleeve 1" 3/4 Rotolock - 7/8" ODF	5311144P07	2
⑤	Teflon Seal	5607001P01	2

Composition of tandem

Tandem		SH195	SH210	SH230
Compressor 1	Model	SH090	SH090	SH090
	Code n° (1)	120H0004	120H0004	120H0004
Compressor 2	Model	SH105	SH120	SH140
	Code n° (1)	120H0212	120H0014	120H0202
Kit	Code n°		7777043	

(1): Example for the voltage code 4 (industrial pack). Refer to "code number information" part for other codes or single pack version

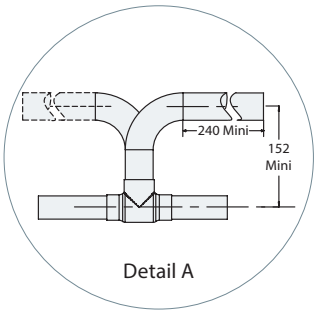

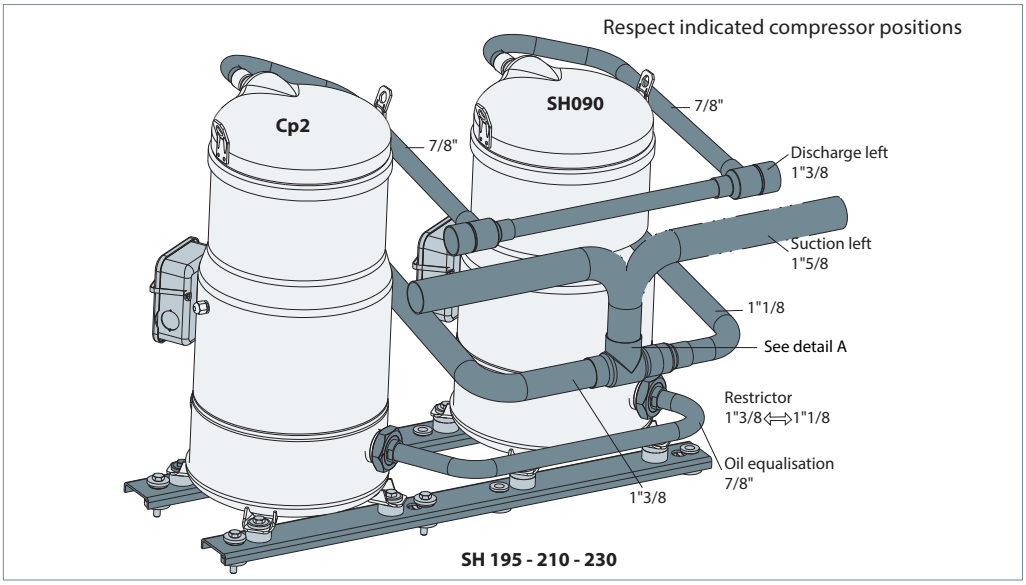

Compressor mounting

The tandem is fixed on the frame using the flexible grommets supplied with the compressor.

The compressors are fixed on the rails (not included) using the 4 mm flat washers ①, 14 mm rigid spacer ③, included in the "tandem kit" reference 7777043 (to be ordered with the compressors).

An additional 7 mm rigid spacer ② must be placed under the rail grommets (see beside drawing).

Because SH090 is 7 mm smaller than SH105, SH120, SH140 and in order to have the oil equalisation connection at the same level for both compressors, an additional 7 mm rigid spacer ② must be added under the SH090 feet.

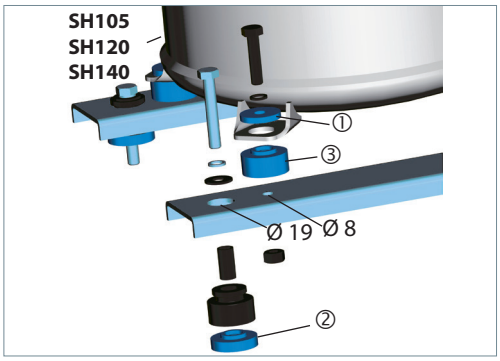

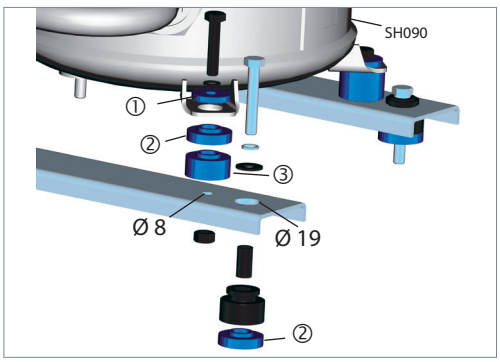

Supplied with the compressor
Included in 7777043 kit
Not supplied

Oil equalisation connection

The level of oil naturally balances by a pipe of 7/8".

The kit 7777043 includes 1"3/4 - 7/8" adaptator sleeves ④ and Teflon seals ⑤ to connect the 7/8" equalisation pipe on 1"3/4 oil connectors.

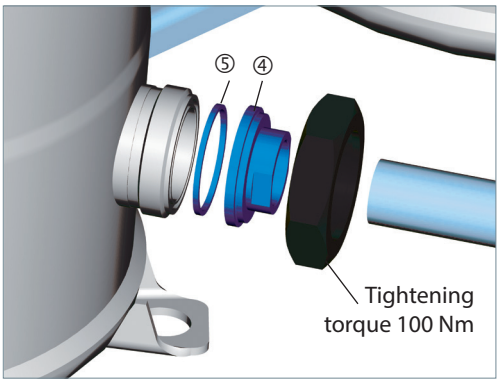

Suction washer

Due to the difference of capacities of the compressors, it is essential to equalise the pressure of the sump. But, this oil equalisation is also function of the configuration of the suction pipe.

For tandem SH195:
Suction from left or right: add restrictor ⑧ (copper colour) diameter 23 mm, at suction of the compressor SH105.

For tandem SH210:
Two profiles proposed:
- Suction from the left: add restrictor ⑥ (black colour) diameter 25 mm, at suction of the compressor SH120.
- Suction from the right: add restrictor ⑦ (black colour) diameter 24 mm, at suction of the compressor SH090.

For tandem SH230:
No restrictor is required.

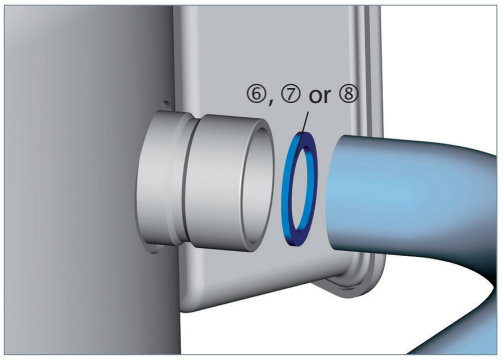

⑥ on SH120 if main suction comes from the left **for SH210**
or
⑦ on SH090 if main suction comes from the right **for SH210**
or
⑧ on SH105 **for SH195**

Composition of the kit

Kit code number 7777043

	Designation	Ref.	Qty.
①	Flat washer Thickness 4 mm	6301028P01	8
②	Rigid spacer Thickness 7 mm	5311629P01	12
③	Rigid spacer Thickness 14 mm	5311629P02	8
④	Equalisation sleeve 1" 3/4 Rotolock - 7/8" ODF	5311144P07	2
⑤	Teflon Seal	5607001P01	2
⑥	Restrictor (black colour) ∅ 25 mm int (∅ 35 mm ext)	5312497P01	1
⑦	Restrictor (black colour) ∅ 24 mm int (∅ 28 mm ext)	5312497P02	1
⑧	Restrictor (copper colour) ∅ 23 mm int (∅ 35 mm ext)	5312497P03	1

Composition of tandem

Tandem		SH260	SH281	SH301
Compressor 1	Model	SH120	SH120	SH140
	Code n° (1)	120H0014	120H0014	120H0202
Compressor 2	Model	SH140	SH161	SH161
	Code n° (1)	120H0202	120H0024	120H0024
Kit	Code n°		7777042	

(1) : Example for the voltage code 4 (industrial pack). Refer to "code number information" part for other codes or single pack version

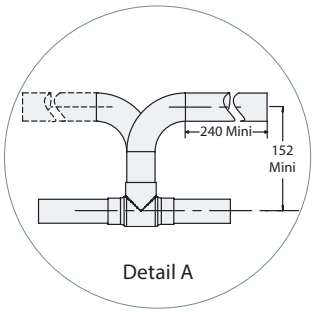

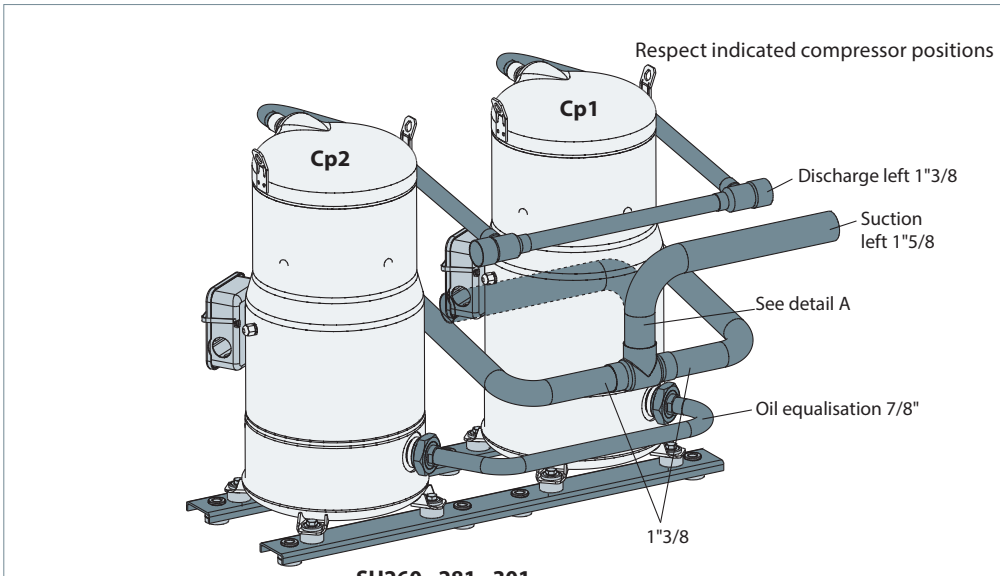

SH260 - 281 - 301

Compressor mounting

The tandem is fixed on the frame using the flexible grommets supplied with the compressor.

The compressors are fixed on the rails (not included) using the 4 mm flat washers ①, 14 mm rigid spacer ③, included in the "tandem kit" reference 7777042 (to be ordered with the compressors).

An additional 7 mm rigid spacer ② must be placed under the rail grommets (see beside drawing).

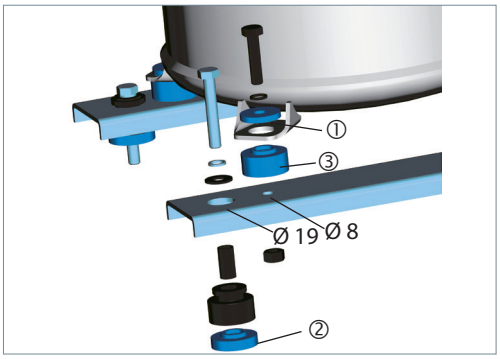

Supplied with the compressor
Included in 7777042 Kit
Not supplied

Oil equalisation connection

The level of oil naturally balances by a pipe of 7/8".

The kit 7777042 include 1"3/4 - 7/8" adaptator sleeves ④ and Teflon seals ⑤ to connect the 7/8" equalisation pipe on 1"3/4 oil connectors.

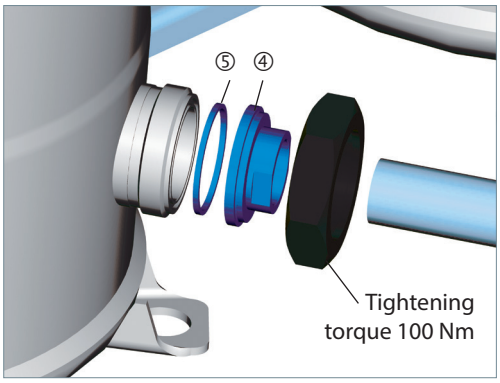

Suction washer

Due to the difference of capacities of the compressors, it is essential to equalise the pressure of the sump.

For tandem SH260:
Two profiles proposed:
- Suction from the right: add a restrictor ⑥, at suction connection of the SH120.
- Suction from the left: no restrictor.

For tandem SH281:
Suction from the left: add a restrictor ⑥, at suction connection of the SH120.
Suction from the right: add a restrictor ⑦, at suction connection of the SH120.

For tandem SH301:
Suction from left or right: add restrictor ⑧ (white colour) diameter 26 mm, at suction of the compressor SH140.

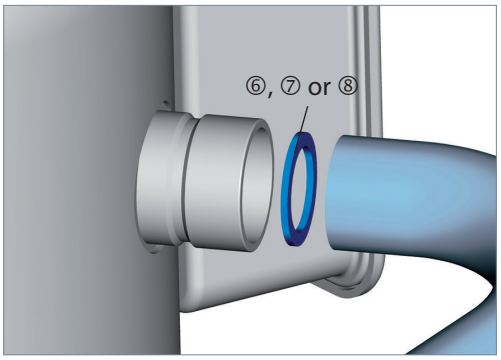

Composition of the kit

Kit code number 7777042

	Designation	Ref.	Qty.
①	Flat washer Thickness 4 mm	6301028P01	8
②	Rigid spacer Thickness 7 mm	5311629P01	8
③	Rigid spacer Thickness 14 mm	5311629P02	8
④	Equalisation sleeve 1" 3/4 Rotolock - 7/8" ODF	5311144P07	2
⑤	Teflon Seal	5607001P01	2
⑥	Restrictor ∅ 25 mm (black colour)	5312497P01	1
⑦	Restrictor ∅ 23 mm (copper colour)	5312497P03	1
⑧	Restrictor ∅ 26 mm (white colour)	5312497P05	1

Composition of tandem

Tandem		SH304	SH324	SH345
Compressor 1	Model	SH120	SH140	SH161
	Code n° (1)	120H0014	120H0202	120H0024
Compressor 2	Model	SH184	SH184	SH184
	Code n° (1)	120H0362	120H0362	120H0362
Kit	Code n°		7777052	

(1): Example for the voltage code 4 (industrial pack). Refer to "code number information" part for other codes or single pack version

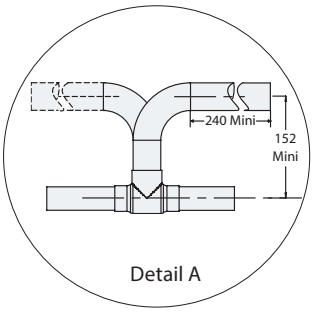

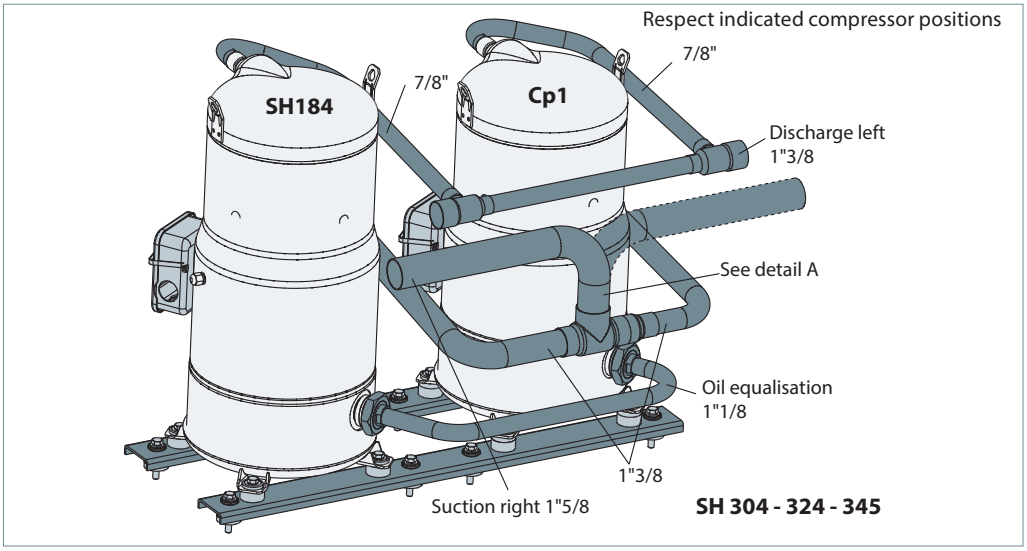

Compressor mounting

The tandem is fixed on the frame using the flexible grommets supplied with the compressor.

The compressors are fixed on the rails (not included) using the 4 mm flat washers ①, 14 mm rigid spacer ③, included in the "tandem kit" reference 7777052 (to be ordered with the compressors).

An additional 7 mm rigid spacer ② must be placed under the rail grommets (see beside drawing).

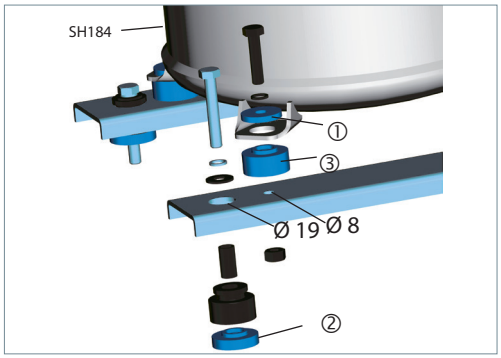

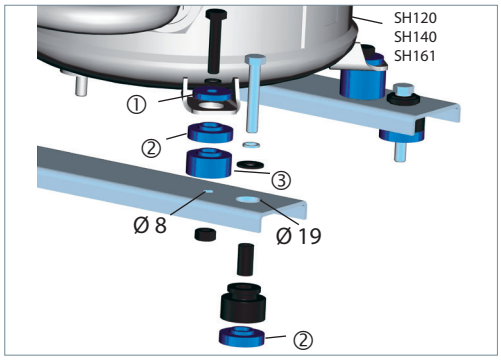

Supplied with the compressor
Included in 7777052 Kit
Not supplied

Because SH120, 140 and 161 are 7 mm smaller than SH184 and in order to have the oil equalisation connection at the same level for both compressors, an additional 7 mm rigid spacer ② must be added under the SH120, 140 or 161 feet.

Oil equalisation connection

The level of oil naturally balances by a pipe of 1"1/8.

The kit 7777052 includes 1"3/4 - 1"1/8 adaptator sleeves ④ and Teflon seals ⑤ to connect the 1"1/8 equalisation pipe on 1"3/4 oil connectors.

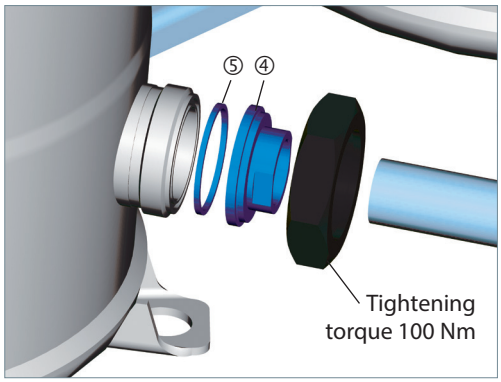

Suction washer

Due to the difference of capacities of the compressors, it is essential to equalise the pressure of the sump. But, this oil equalisation is also function of the configuration of the suction pipe.

For tandem SH304:
Suction from left or right, add a restrictor ⑧ (copper colour) diameter 23 mm at the suction of the compressor SH120.

For tandem SH324:
Suction from left or right, add a restrictor ⑦ (black colour) diameter 24 mm at the suction of the compressor SH140.

For tandem SH345:
Suction from left or right, add a restrictor ⑥ (white colour) diameter 26 mm at the suction of the compressor SH161.

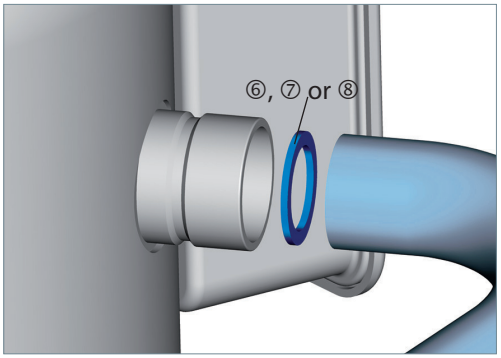

Composition of the kit

Kit code number 7777052

	Designation	Ref.	Qty.
①	Flat washer Thickness 4 mm	6301028P01	8
②	Rigid spacer Thickness 7 mm	5311629P01	12
③	Rigid spacer Thickness 14 mm	5311629P02	8
④	Equalisation sleeve 1" 3/4 Rotolock - 1"1/8 ODF	5311139P02	2
⑤	Teflon Seal	5607001P01	2
⑥	Restrictor (white colour) ∅ 26 mm int (∅ 35 mm ext)	5312497P05	1
⑦	Restrictor (black colour) ∅ 24 mm int (∅ 35 mm ext)	5312497P06	1
⑧	Restrictor (copper colour) ∅ 23 mm int (∅ 35 mm ext)	5312497P03	1

Composition of tandem

Tandem		SH360	SH482	SH590	SH760
Compressor 1	Model	SH180	SH240	SH295	SH380
	Code n° (1)	120H0276	120H0300	120H0828	120H0256
Compressor 2	Model	SH180	SH240	SH295	SH380
	Code n° (1)	120H0276	120H0300	120H0828	120H0256
Kit	Code n°	120Z0792			

(1): Example for the voltage code 4 (Industrial pack and motor protection module 110-240 V). Refer to "code number information" part for other codes, other motor protection or single pack version

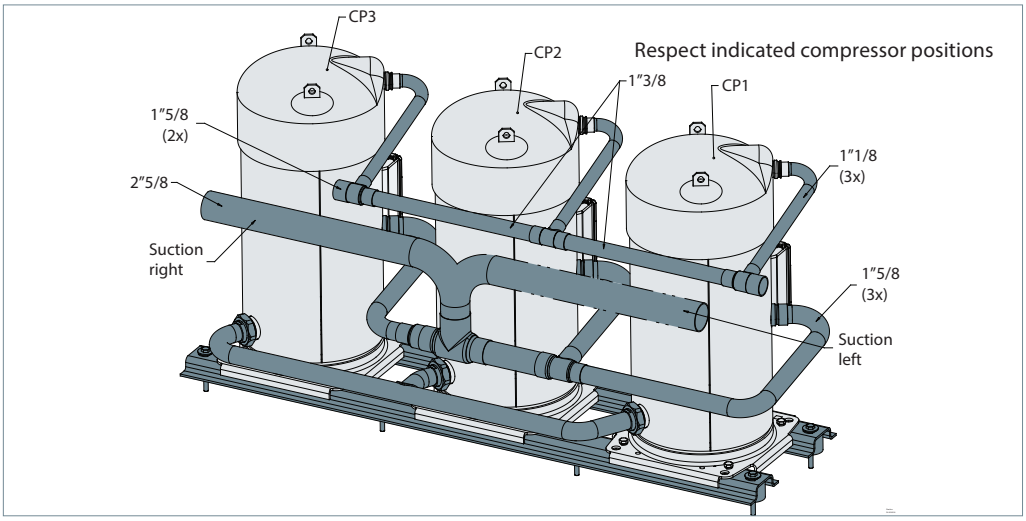

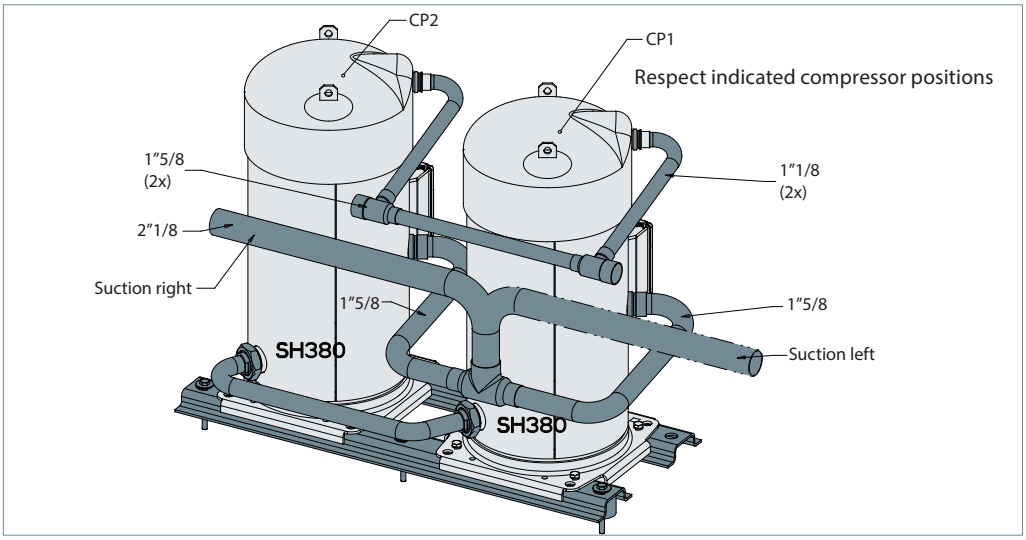

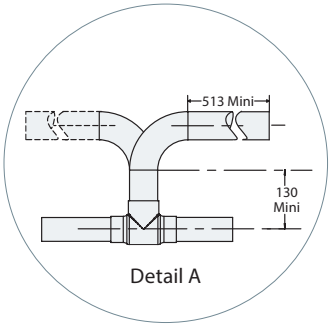

*: The unit frame must include a sufficiently strong structure at these position to support tandem rails.

Oil equalisation connection

The level of oil naturally balances by a pipe of 1"3/8. To fix this oil connection equalisation rotolock, the adaptor sleeves ⑥: 2"1/4 - 1"3/8 and Teflon seals ⑦, included in the kit 7777041 must be used.

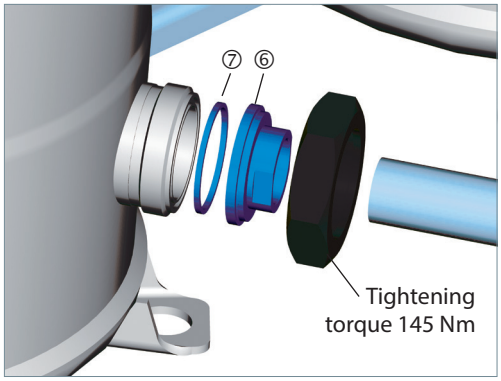

Composition of tandem

Tandem		SH368
Compressor 1	Model	SH184
	Code n° (1)	120H0362
Compressor 2	Model	SH184
	Code n° (1)	120H0362
Kit	Code n°	7777054

(1) : Example for the voltage code 4 (industrial pack). Refer to "code number information" part for other codes or single pack version

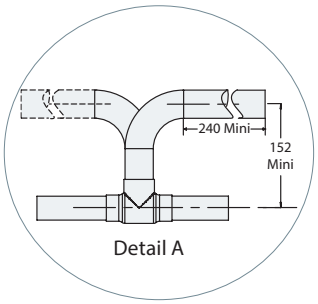

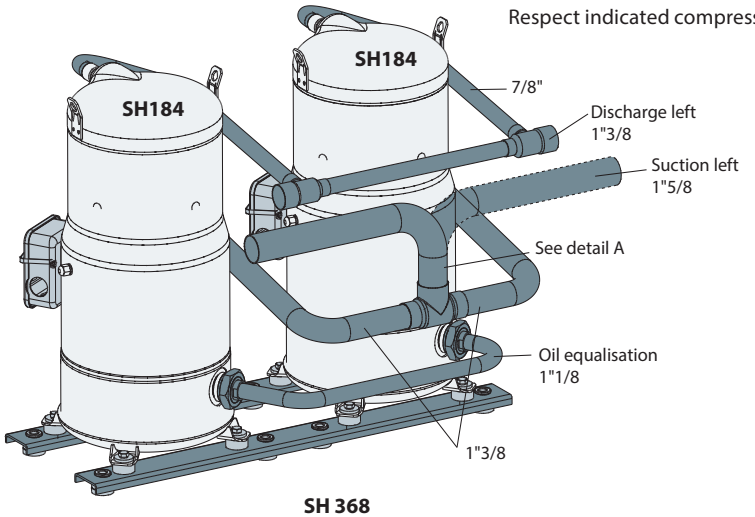

SH 368

Compressor mounting

The tandem rail assembly is fixed on the unit frame using the flexible grommets supplied with the compressor. The compressors are fixed on the rails (not included) using the 4 mm flat washers ①, 14 mm rigid spacer ③, included in the "tandem kit" reference 7777054 (to be ordered with the compressors). An additional 7 mm rigid spacer ② must be placed under the rail grommets (see beside drawing).

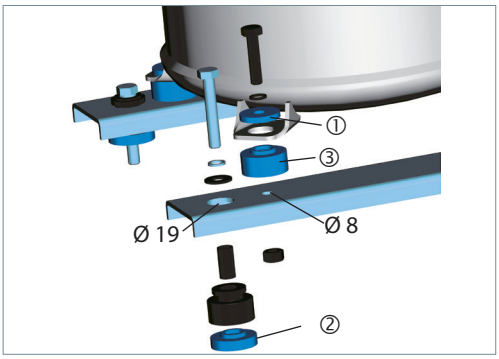

Supplied with the compressor
Included in 7777054 Kit
Not supplied

Oil equalisation connection

The level of oil naturally balances by a pipe of 1"1/8.

The kit 7777054 includes 1"3/4 - 1"1/8 adaptator sleeves ④ and new Teflon seals ⑤ to connect the 1"1/8 equalisation pipe on 1"3/4 oil connectors.

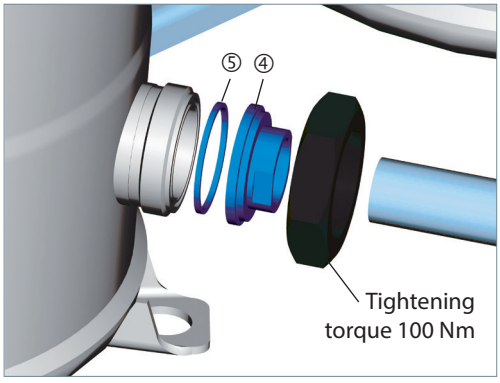

Composition of the kit

Kit code number 7777054

	Designation	Ref.	Qty.
①	Flat washer Thickness 4 mm	6301028P01	8
②	Rigid spacer Thickness 7 mm	5311629P01	8
③	Rigid spacer Thickness 14 mm	5311629P02	8
④	Equalisation sleeve 1" 3/4 Rotolock - 1"1/8 ODF	5311139P02	2
⑤	Teflon Seal	5607001P01	2

Composition of tandem

Tandem		SH420	SH535	SH675
Compressor 1	Model	SH180	SH240	SH295
	Code n° (1)	120H0276	120H0300	120H0828
Compressor 2	Model	SH240	SH295	SH380
	Code n° (1)	120H0300	120H0828	120H0256
Kit	Code n°		120Z0796	

(1): Example for the voltage code 4 (Industrial pack and motor protection module 110-240 V). Refer to "code number information" part for other codes, other motor protection or single pack version

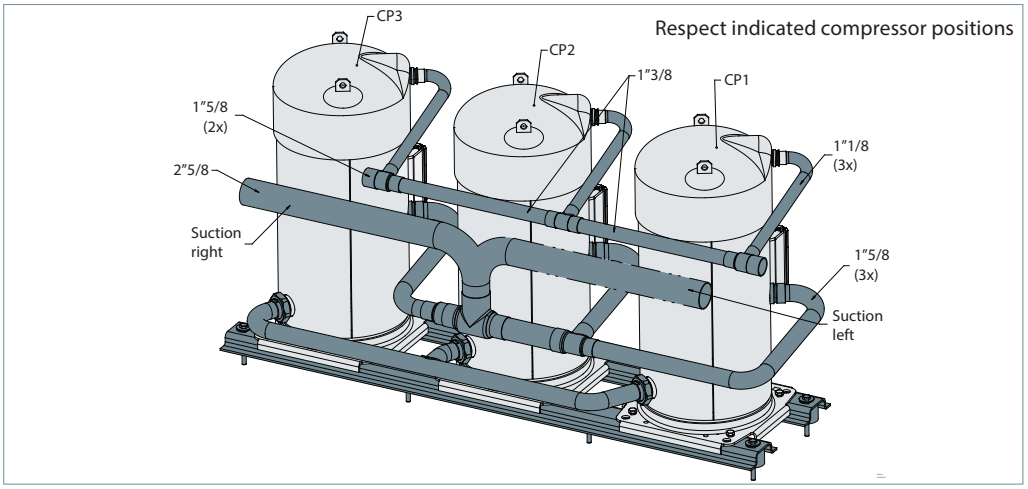

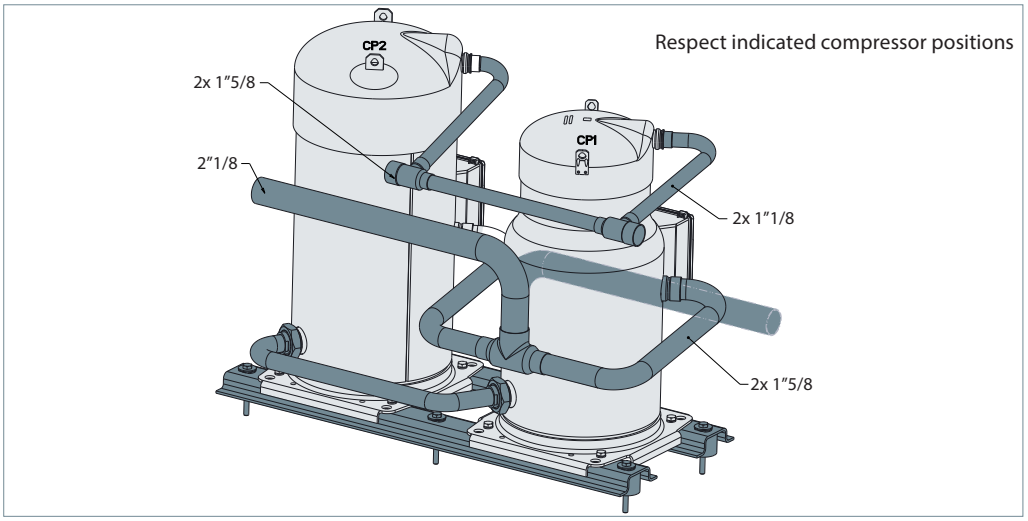

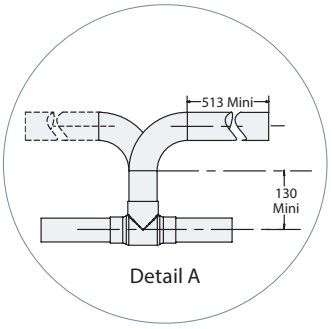

*: The unit frame must include a sufficiently strong structure at these position to support tandem rails.

Suction washer

Due to the difference of capacities of the compressors, it is essential to equalise the pressure of the sump. Hence, a restrictor ⑧ must be added on suction connection of the smallest compressor:

For SH420 tandem: on the suction of the compressor SH180.

For SH535 tandem: on the suction of the compressor SH240.

For SH675 tandem: on the suction of the compressor SH295.

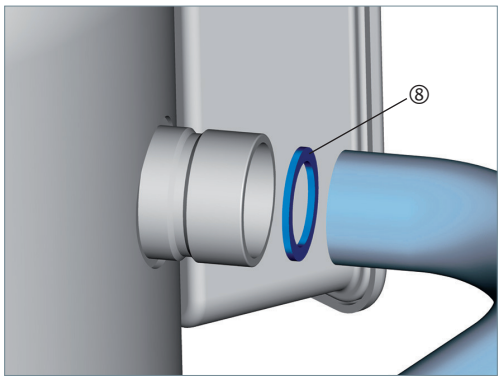

Composition of tandem

Tandem		SH475	SH560
Compressor 1	Model	SH180	SH180
	Code n° (1)	120H0276	120H0276
Compressor 2	Model	SH295	SH380
	Code n° (1)	120H0828	120H0256
Kit	Code n°	120Z0795	

(1): Example for the voltage code 4 (Industrial pack and motor protection module 110-240 V). Refer to "code number information" part for other codes, other motor protection or single pack version

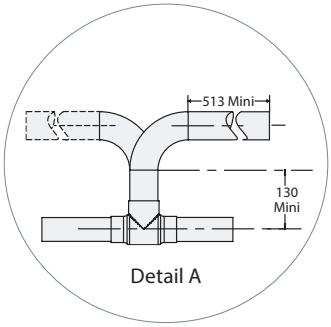

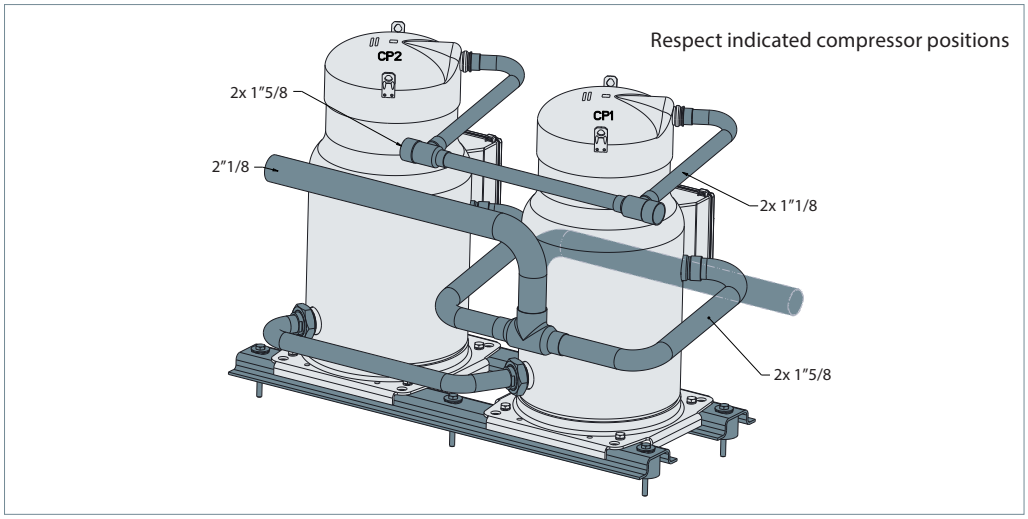

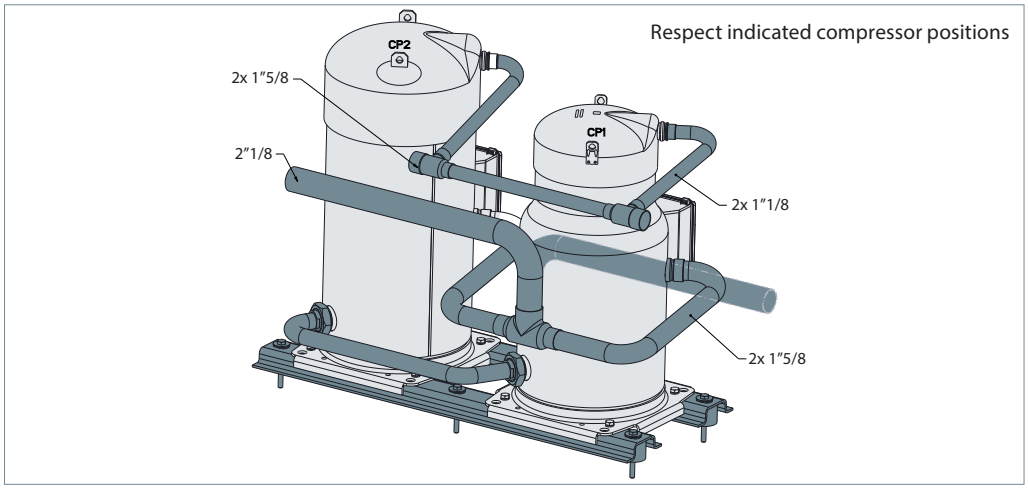

*: The unit frame must include a sufficiently strong structure at these position to support tandem rails.

Oil equalisation connection

The level of oil naturally balances by a pipe of 1"3/8. To fix this oil connection equalisation rotolock, the adaptor sleeves ⑥: 2"1/4 - 1"3/8 and Teflon seal ⑦, included in the kit 7777038 must be used.

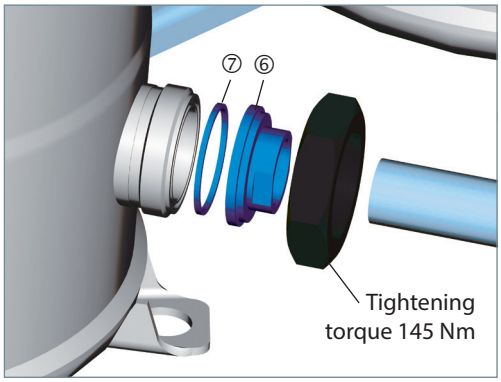

Composition of tandem

Tandem		SH620
Compressor 1	Model	SH240
	Code n° (1)	120H0300
Compressor 2	Model	SH380
	Code n° (1)	120H0256
Kit	Code n°	120Z0791

(1): Example for the voltage code 4 (Industrial pack and motor protection module 110-240 V). Refer to "code number information" part for other codes, other motor protection or single pack version

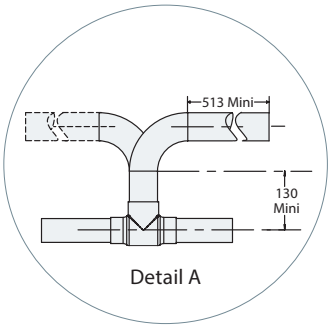

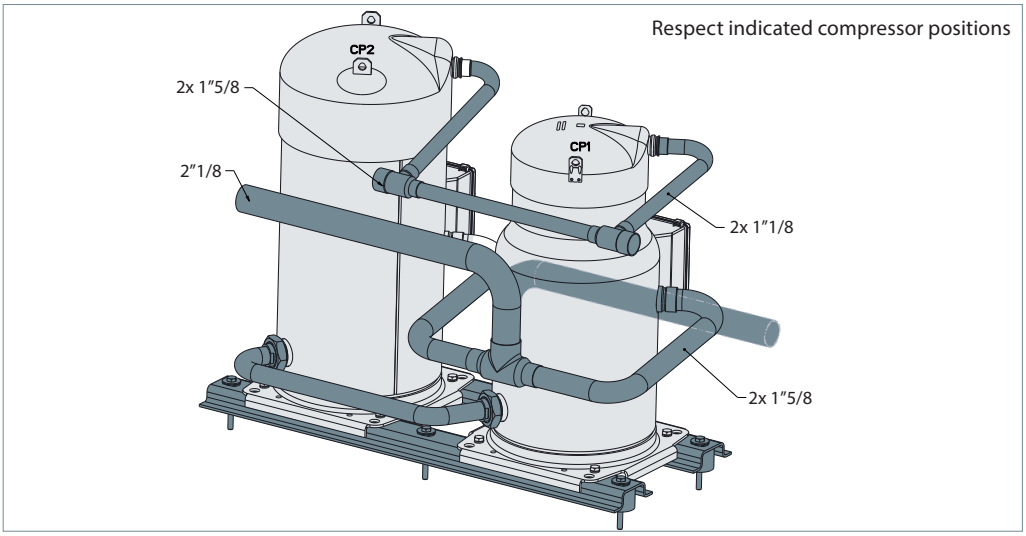

* : The unit frame must include a sufficiently strong structure at these position to support tandem rails.

Suction washer

Due to the difference of capacities of the compressors, it is essential to equalise the pressure of the sump. Hence, a restrictor ⑧ must be added on the suction of the compressor SH240.

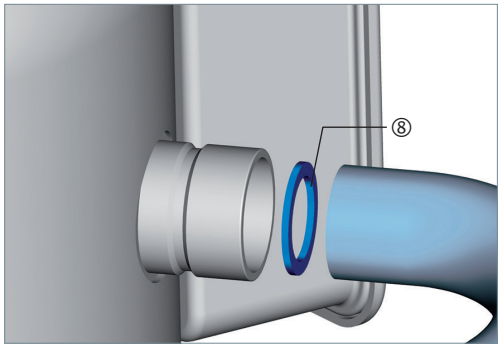

Operation principle

SH552 trio use the static system to balance the oil level between the compressors.

Each of the compressors may run alone to provide proper capacity for part load operation.

The system has been designed to ensure a precise pressure balancing between the sumps, facilitating the oil equalization by gravity.

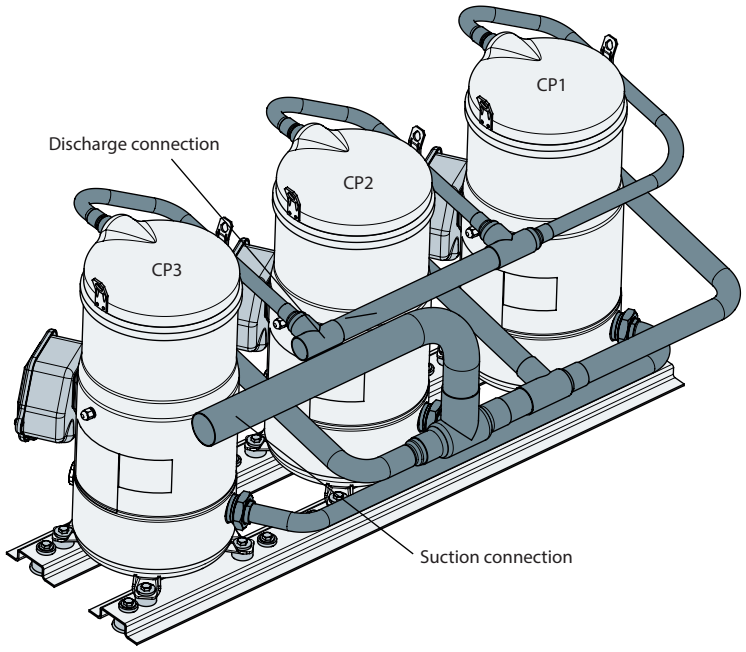

Trio model	Composition	Suction	Discharge	Oil equalisation	Kit Trio Code no	Trio drawing number
SH552	3 x SH184	2"1/8	1"3/8	1"1/8	120Z0640	8560091

Composition of trio

Trio		SH552
3 identical compressors	Model	SH184
	Code No (1)	120H0362
Kit	Code No	120Z0640

(1): Example for the voltage code 4 (Industrial pack). Refer to "code number information" part for other codes, other motor protection or single pack version

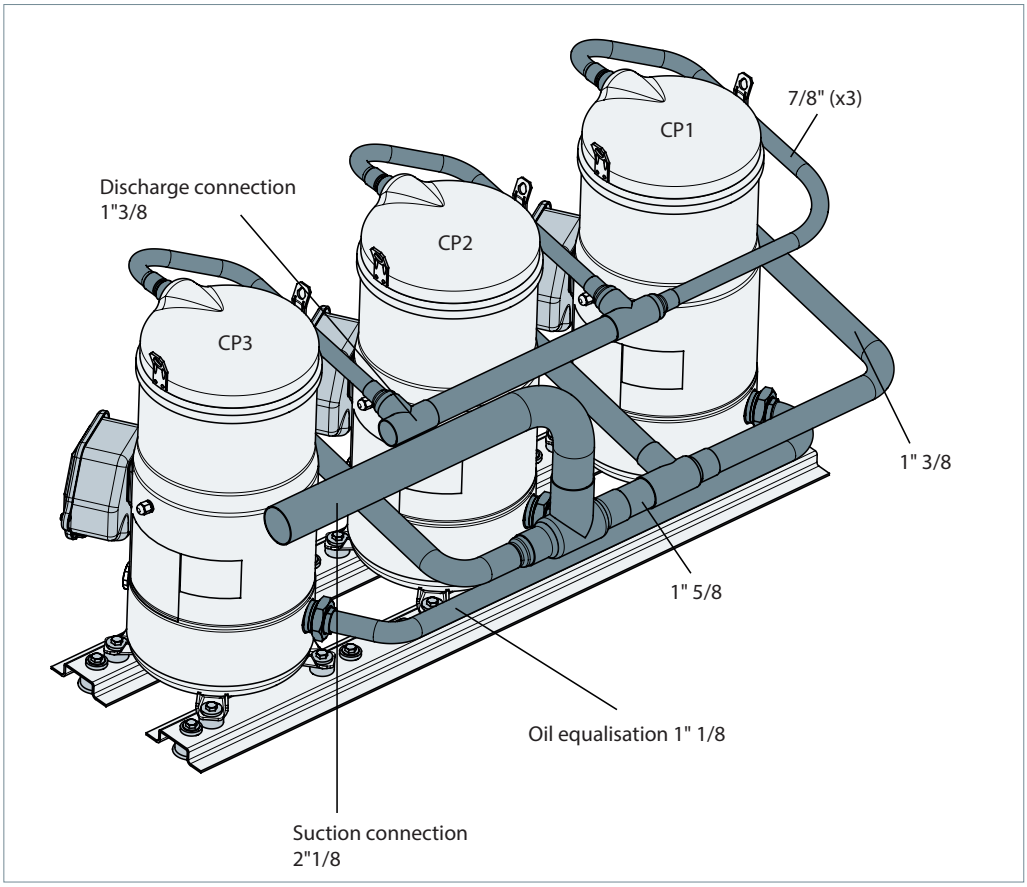

Compressor mounting

The Trio is fixed on the frame by using flat washers ①, rigid spacers ②, grommet sleeves ③, and grommets ④, provided in the kit 120Z0640.

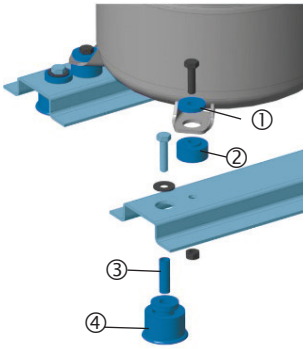

Supplied with the compressor
Included in 120Z0640 Kit
Not supplied

Oil equalisation connection

The level of oil naturally balances by a pipe of 1"1/8. To fix this oil connection equalization rotolock, the Teflon seals ⑤ and adaptor sleeves ⑥, included in the kit 120Z0640 must be used.

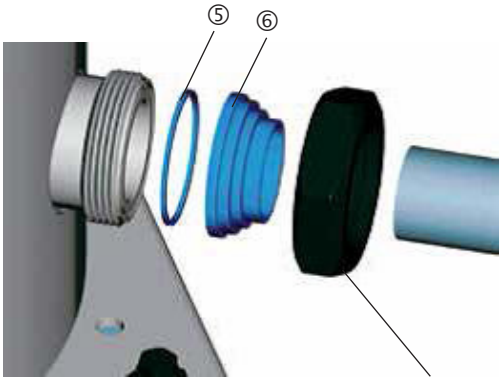

Tightening torque 100 Nm

Suction washer

Suction washer ⑦, included in kit 120Z0640, must be placed in compressor number 1 and number 3.

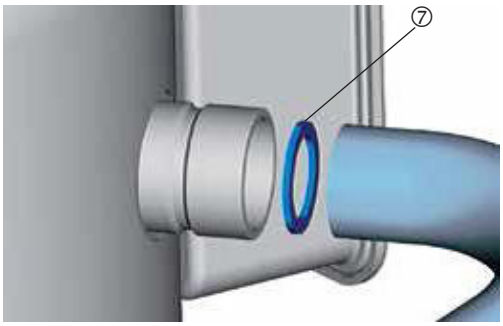

Composition of the kit

	Designation	Ref	Qty
①	Washers	6301028P01	12
②	Rigid Spacer 14mm	5311629P02	12
③	Grommet Sleeves	5302020P01	12
④	Rubber Grommets	5603007P01	12
⑤	Teflon Seal	5607001P01	3
⑥	Adaptor Sleeves 1"3/4 Rotolock -1"1/8 ODF	5311139P02	3
⑦	Suction Restrictor Washer Φ26mm	5312497P05	2

Operation principle

SH550 to SH1140 trio use the static system to balance the oil level between the compressors. Each of the compressors may run alone to provide proper capacity for part load operation. The system has been designed to ensure a precise pressure balancing between the sumps, facilitating the oil equalisation by gravity. The discharge line is shown with three tees, to indicate that both left and right side discharge header are possible.

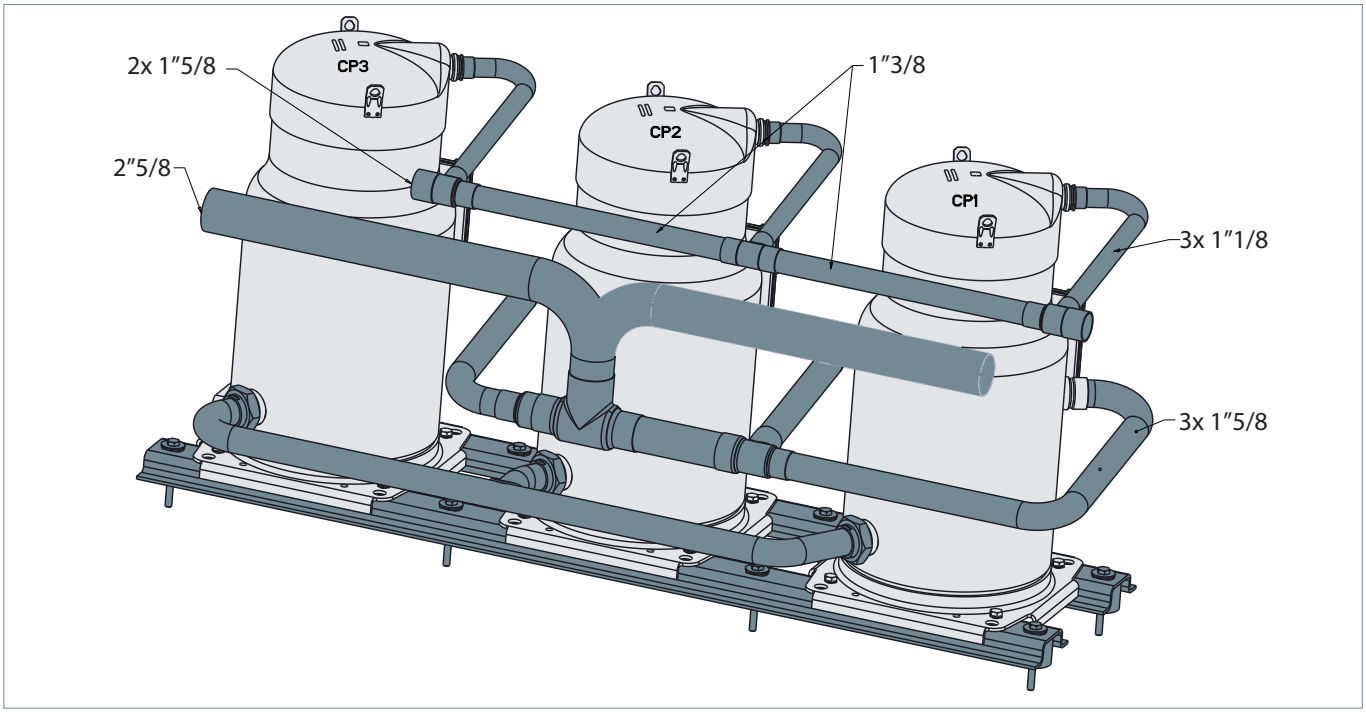

Trio model	Composition	Suction	Discharge	Oil equalisation	Kit Trio Code no	Trio drawing number
SH550	3 x SH180	2"5/8	1"5/8	1"5/8	120Z0793* 120Z0794**	8556217
SH720	3 x SH240	2"5/8	1"5/8	1"5/8	120Z0784* 120Z0794**	8556217
SH885	3 x SH295	2"5/8	1"5/8	1"5/8	120Z0784* 120Z0794**	8556217
SH1140	3 x SH380	2"5/8	1"5/8	1"5/8	120Z0783* 120Z0790**	8556120

* Left suction connection

** Right suction connection

Suction washer

One suction washer ® must be placed in **compressor number 3** of trio SH550, 720, 885.

For SH1140 (kit 120Z0686), the washer ø31 must be placed in compressor number one; the washer ø29 must be placed in compressor number 3.

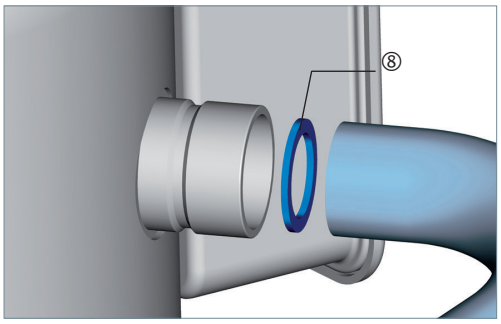

Composition of trio

Trio		SH550	SH720	SH885
3 identical compressors	Model	SH180	SH240	SH295
	Code n° (1)	120H0276	120H0300	120H0828
Kit	Code n°		120Z0794	

(1): Example for the voltage code 4 (Industrial pack and motor protection module 110-240 V). Refer to "code number information" part for other codes, other motor protection or single pack version

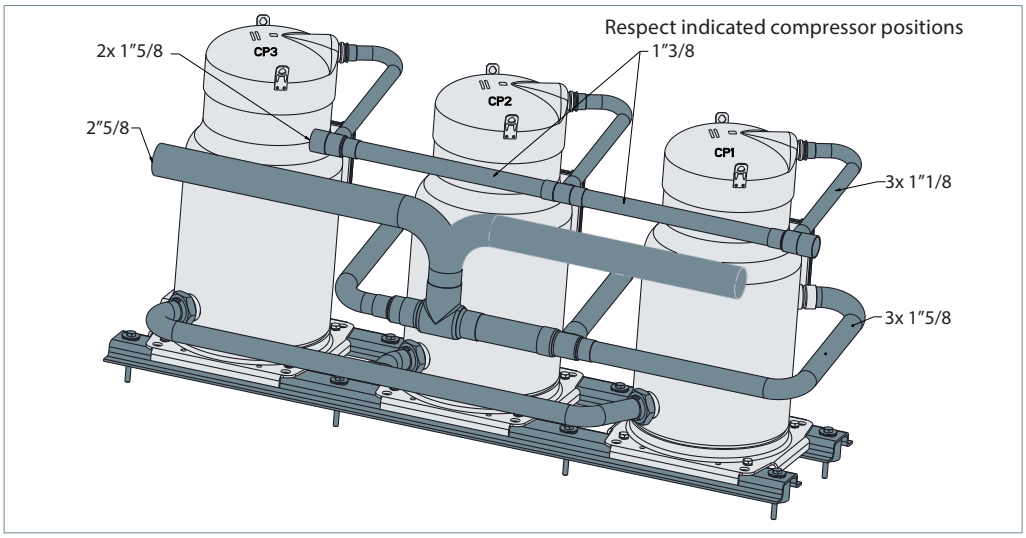

*: The unit frame must include a sufficiently strong structure at these position to support tandem rails.

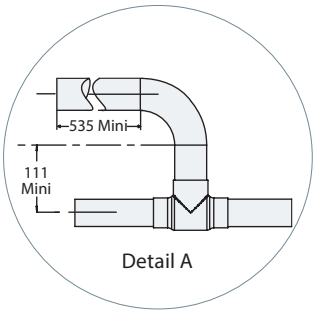

Suction washer

One suction washer ⑧ must be placed in **compressors number 1 and number 3** of trio SH550, 720 and 885.

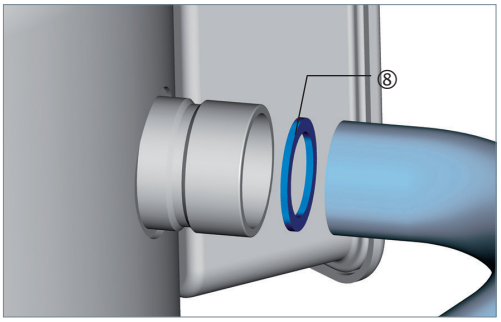

Composition of trio

Trio		SH1140
3 identical compressors	Model	SH380
	Code n° (1)	120H0256
Kit	Code n°	120Z0790

(1): Example for the voltage code 4 (Industrial pack and motor protection module 110-240 V). Refer to "code number information" part for other codes, other motor protection or single pack version

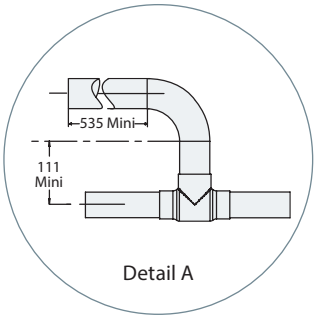

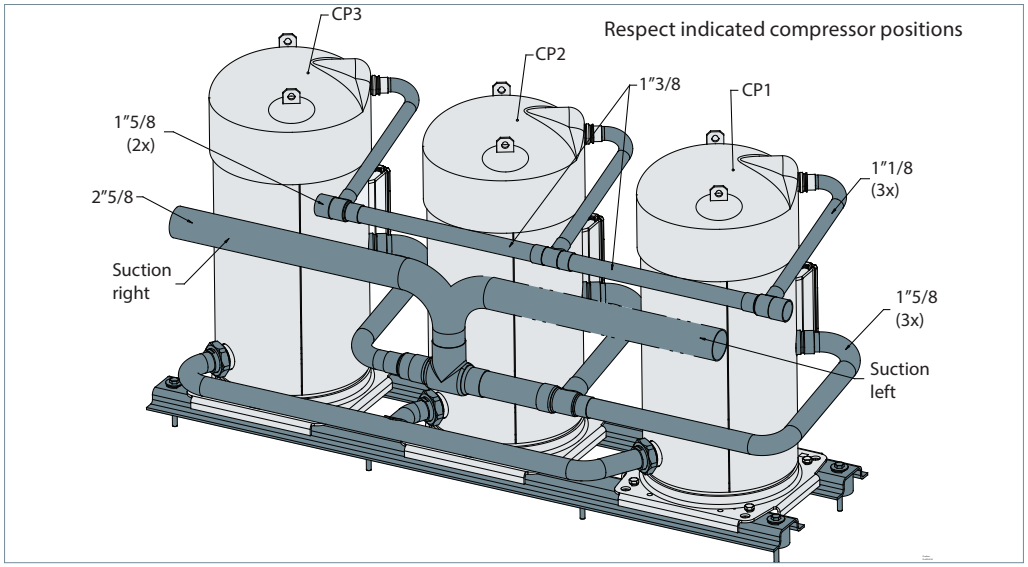

* : The unit frame must include a sufficiently strong structure at these position to support tandem rails.

Tandem models

CP1		CP2		Tandem model	Suction from	Kit code n° to order	Washer reference	Washer Ø (mm)	Washer in suction of
SH090	+	SH090	=	SH182	Left Right	7777044		Not needed	
SH090	+	SH105	=	SH195	Left	7777043	5312497P03	23	CP2
					Right		5312497P03	23	CP2
SH090	+	SH120	=	SH210	Left	7777043	5312497P01	25	CP2
					Right		5312497P02	24	CP1
SH105	+	SH105	=	SH212	Left Right	7777044		Not needed	
SH090	+	SH140	=	SH230	Left Right	7777043		Not needed	
SH120	+	SH120	=	SH242	Left Right	7777044		Not needed	
SH120	+	SH140	=	SH260	Left	7777042		Not needed	
					Right		5312497P01	25	CP1
SH120	+	SH161	=	SH281	Left	7777042	5312497P01	25	CP1
					Right		5312497P03	23	CP1
SH140	+	SH140	=	SH282	Left Right	7777044		Not needed	
SH140	+	SH161	=	SH301	Left Right	7777042	5312497P05	26	CP1
SH120	+	SH184	=	SH304	Left Right	7777052	5312497P03	23	CP1
SH161	+	SH161	=	SH322	Left Right	7777044		Not needed	
SH140	+	SH184	=	SH324	Left Right	7777052	5312479P06	35	CP1
SH161	+	SH184	=	SH345	Left Right	7777052	5312479P05	26	CP1
SH180	+	SH180	=	SH360	Left Right	120Z0792		Not needed	
SH184	+	SH184	=	SH368	Left Right	7777054		Not needed	
SH180	+	SH240	=	SH420	Left	120Z0796	5311579P01	31	CP1
					Right		5311579P01	31	CP1
SH180	+	SH295	=	SH475	Left	120Z0795	5311579P04	26	CP1
					Right		5311579P04	26	CP1
SH240	+	SH240	=	SH482	Left Right	120Z0792		Not needed	
SH240	+	SH295	=	SH535	Left	120Z0796	5311579P01	31	CP1
					Right		5311579P01	31	CP1
SH180	+	SH380	=	SH560	Left	120Z0795	5311579P04	26	CP1
					Right		5311579P04	26	CP1
SH295	+	SH295	=	SH590	Left Right	120Z0792		Not needed	
SH240	+	SH380	=	SH620	Left	120Z0791	5311579P05	29	CP1
					Right		5311579P05	29	CP1
SH295	+	SH380	=	SH675	Left	120Z0796	5311579P01	31	CP1
					Right		5311579P01	31	CP1
SH380	+	SH380	=	SH760	Left Right	120Z0792		Not needed	

Trio models

CP1		CP2		CP3		Trio model	Suction from	Kit code n° to order	Washer reference	Washer Ø (mm)	Washer in suction of
SH180	+	SH180	+	SH180	=	SH550	Left	120Z0784	5311579P02	33	CP3
							Right	120Z0794	5311579P03	34.5	CP1 and CP3
SH184	+	SH184	+	SH184	=	SH552	Right	120Z0640	5312497P05	26	CP1 and CP3
SH240	+	SH240	+	SH240	=	SH720	Left	120Z0784	5311579P08	30	CP3
							Right	120Z0794	5311579P03	34.5	CP1 and CP3
SH295	+	SH295	+	SH295	=	SH885	Left	120Z0784	5311579P08	30	CP3
							Right	120Z0794	5311579P03	34.5	CP1 and CP3
SH380	+	SH380	+	SH380	=	SH1140	Left	120Z0783	5311579P01/ 5311579P05	29/31	CP1 and CP3
							Right	120Z0790		Not needed	

Compressor position and suction header side

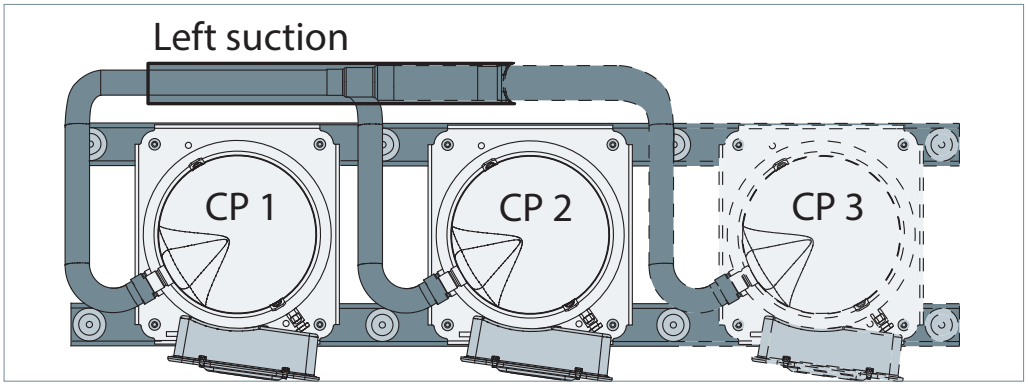

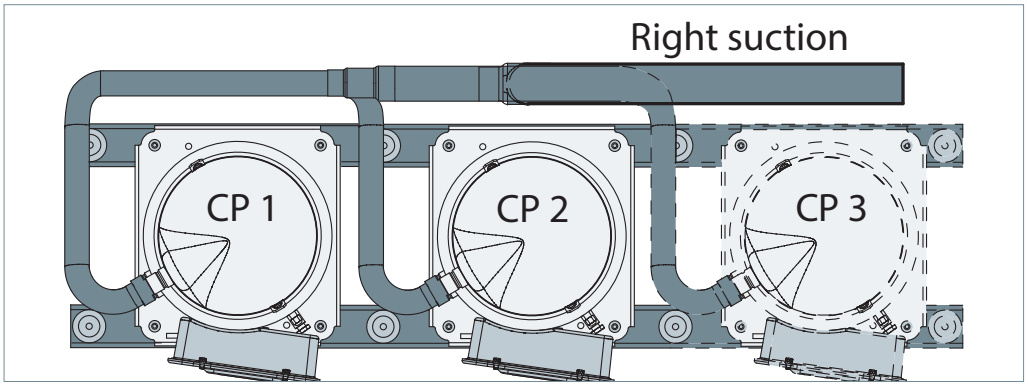

Installation and service procedures for a parallel system are similar to basic system installations. The selection of additional system components for parallel installations follows the basic system common rules. Please refer to the Selection and Application Guidelines for Danfoss SH scroll compressors (FRCC.PC.007) for detailed installation and service procedures.

Compressor handling and storage

Each Danfoss SH scroll compressor is equipped with two lift rings on the top shell. Always use both these rings when lifting the compressor. Use lifting equipment rated and certified for the weight of the compressor. The use of a spreader bar rated for the lifting lugs spacing and the weight of the compressor is necessary to ensure a better load distribution. The use of lifting hooks closed with a clasp and certified to lift the weight of the compressor is also highly recommended. Always respect the appropriate rules concerning lifting objects of the type and weight of these compressors. Maintain the compressor in an upright position during all handling manoeuvres (maximum of 15° from vertical).

⚠ Never use only one lifting lug to lift the compressor. The compressor is too heavy for the single lug to handle, and the risk is run that the lug could separate from the compressor with extensive damage and possible personal injury as a result.

Store the compressor not exposed to rain, corrosive or flammable atmosphere and between -35°C and 52°C when charged with R410A refrigerant and between -35°C and 70°C when charged with nitrogen.

⚠ When the compressor is mounted as part of an installation, never use the lift rings on the compressor to lift the installation or tandem/trio assemblies. The risk is run that the lugs could separate from the compressor or that the compressor could separate from the base frame with extensive damage and possible personal injury as a result.

Never apply force to the terminal box with the intention of moving the compressor, as the force placed upon the terminal box can cause extensive damage to both the box and the components contained inside.

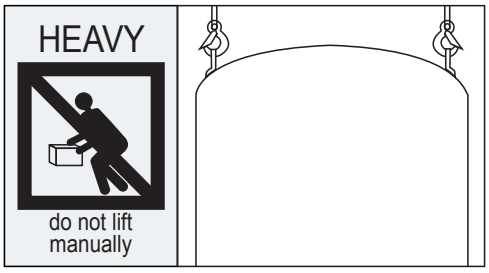

Compressor mounting

A common base frame, rigid enough to support the weight of the compressors, must be used for installation. The common frame must always be mounted on grommets to reduce transmission of vibration to the floor. It is recommended to install all control and safety devices on an independent frame. These devices should be connected to the common frame using flexible tubing.

Suction and discharge lines must have adequate three dimensional flexibility. For parallel systems the simplest means of acquiring this is by the use of vibration absorbers.

For details see compressors mounting for each tandem/trio arrangement.

Tightening torques

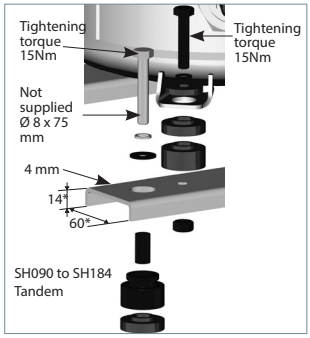

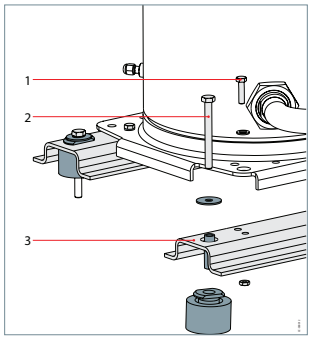

1: HM10 x 30 class 10.9 Tightening torque 50Nm

2: HM10 x 100 class 10.9 Tightening torque 50Nm

3: Thickness : 5mm (0.2 inch)

Included in tandem/trio kit

Not supplied

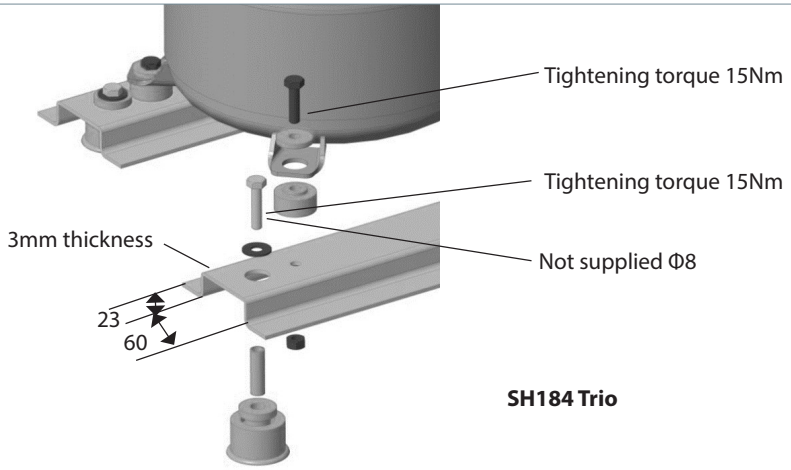

SH184 Trio

Tandem and trio piping design

For each tandem and trio configuration specific outline drawings are available as indicated on the previous pages. These drawings must always be respected.
No changes shall be made to the indicated tubing diameter and fitting types.

If Danfoss tandem or trio piping design is changed, additional test must be carried out on the unit to ensure proper oil equalisation. (see section: Specific application recommendations)

The oil equalisation line shall be made of copper tube and assembled in such a way that it does not extend above the connection height and must be horizontal so as not to trap oil.

Wiring and rotation direction

All compressors in a tandem and trio unit must be electrically wired individually.

Compressors should run with the correct rotation direction. This can be achieved by having the correct phase sequence on each compressor motor terminal (L1-T1, L2-T2, L3-T3).

Oil level

The oil must be checked before commissioning (visible in the oil sight glass). Check the oil level again after a minimum of 2 hours operation at nominal conditions. In most installations the initial compressor oil charge will be sufficient. In installations with line runs exceeding 20 m or with many oil traps, additional oil may be required. Normally the quantity of oil added should be no more than 2% of the total refrigerant charge (this percentage does not take into account oil contained in accessories such as suction accumulators, liquid receiver, or oil traps). If this amount has already been added and the oil level in the compressors keeps decreasing, the oil return in the installation is insufficient. A piping design checking is required.

During operation, the oil level in the sight glass of the compressors may fluctuate. The oil level can be checked directly after the system has stopped. In this case the level must be visible in the oil sight glass of all compressors.

On units working 100% load continuously, a compressor oil level might decrease. In order to avoid any loss of oil, regular unit stops might be needed to re equilibrate oils levels in the compressors.

Failure analysis

When one compressor in a parallel system fails, the chance of foreign particles entering other compressors is greatly increased. Therefore a failure analysis must be done quickly to insure further proper running conditions for the overall installation (i.e. : oil analysis).

Oil equalisation connection

Danfoss Commercial Compressors has developed specially adapted oil equalisation systems which ensure proper oil balancing between the compressors.

Hence, Danfoss SH scroll compressors are equipped with rotolock connections:

- SH090 to 184: 1" 3/4 rotolock connection allowing use of 1"3/4 - 7/8" or 1"3/4 - 1"1/8.
- SH180 to 485: 2"1/4 rotolock connection allowing the use of 2"1/4 - 1"3/8 (tandem) or 2"1/4 - 1"5/8 sleeve (trio).

Oil equalisation fitting must not be heated during installation and servicing. This could damage to the compressor and impact oil equalisation balancing.

Gaskets and gasket sets



Type	Code no.	Description	Application	Packaging	Pack size
G07	8156132	Gasket, 1"3/4	Models with 1"3/4 rotolock connection	Multipack	10
G07	7956003	Gasket, 1"3/4	Models with 1"3/4 rotolock connection	Industry pack	50
G08	8156133	Gasket, 2"1/4	Models with 2"1/4 rotolock connection	Multipack	10
G08	7956004	Gasket, 2"1/4	Models with 2"1/4 rotolock connection	Industry pack	50
	8156013	Gasket set 1"1/4 - 1"3/4 - 2"1/4, OSG gaskets black and white	All Rotolock models	Multipack	10

Solder sleeve



Type	Code no.	Description	Application	Packaging	Pack size
P03	8153006	Solder sleeve P03 (2"1/4 Rotolock - 1"5/8 ODF)	Models with 2"1/4 rotolock connection	Multipack	10
P07	8153013	Solder sleeve P07 (1"3/4 Rotolock - 7/8" ODF)	Models with 1"3/4 rotolock connection	Multipack	10
P10	8153003	Solder sleeve P10 (1"3/4 Rotolock - 1"3/8 ODF)	Models with 1"3/4 rotolock connection	Multipack	10

Rotolock nut



Type	Code no.	Description	Application	Packaging	Pack size
	8153124	Rotolock nut,1"3/4	Models with 1-3/4" rotolock connection	Multipack	10
	8153126	Rotolock nut,2"1/4	Models with 2-1/4" rotolock connection	Multipack	10

Motor protection modules and transformers



Type	Code no.	Description	Application	Packaging	Pack size
	120Z0584	Electronic motor protection module, 24 V AC	SH180-240-295-380	Single pack	1
	120Z0585	Electronic motor protection module, 110-240 V		Single pack	1

Crankcase heaters



Type	Code no.	Accessory description	Application	Packaging	Pack size
	120Z0388	80W 24V surface sump heater CE and UL	SH090-105-120-140-161-184	Multipack	8
	120Z0389	80W 230V surface sump heater CE and UL		Multipack	8
	120Z0390	80W 400V surface sump heater CE and UL		Multipack	8
	120Z0391	80W 460V surface sump heater CE and UL		Multipack	8
	120Z0402	80W 575V surface sump heater CE and UL		Multipack	8
	7773108	Belt type crankase heater, 75W, 230V, CE & UL	SH180-240-295-380	Multipack	6
	7973005	Belt type crankase heater, 75W, 230V, CE & UL		Industry pack	50
	7773118	Belt type crankase heater, 75W, 400V, CE & UL		Multipack	6
	120Z0464	Belt type crankase heater, 75W, 460V, CE & UL		Multipack	6
	120Z0465	Belt type crankase heater, 75W, 575V, CE & UL		Multipack	6
	120Z0870	Belt type crankase heater, 75W, 24V, CE & UL		Multipack	6

Discharge temperature protection



Type	Code no.	Description	Application	Packaging	Pack Size
	7750009	Discharge thermostat kit	All models	Multipack	10
	7973008	Discharge thermostat kit	All models	Industry pack	50

Mounting hardware



Type	Code no.	Description	Application	Packaging	Pack Size
	120Z0066	Mounting kit for scroll compressors. Grommets, sleeves, bolts, washers	SH090-105-120-140-161-184	Single pack	1
	8156138	Mounting kit for scroll compressors. Grommets, sleeves, bolts, washers	SH180-240-295-380-485	Single pack	1

Acoustic hoods



Type	Code no.	Description	Application	Packaging	Pack Size
	120Z0034	Acoustic hood for scroll compressor	SH090	Single pack	1
	120Z0035	Acoustic hood for scroll compressor	SH105-120-140-161 (except SH161 - 140 code 3)	Single pack	1
	120Z0135	Acoustic hood for scroll compressor	SH184-SH161 code 3 -SH140 code 3	Single pack	1
	120Z0022	Acoustic hood for scroll compressor	SH180-240-295-380*	Single pack	1
	120Z0579	Acoustic hood for scroll compressor	SH380-3	Single pack	1
	120Z0353	Bottom insulation for scroll compressor	SH180-240-295-380	Single pack	1

* except code3

Terminal boxes, covers and T-block connectors



Type	Code no.	Description	Application	Packaging	Pack Size
	120Z0413	Terminal box cover	SH184-140 and 161 code 3	Single pack	1
	8156135	Service kit for terminal box 96 x 115 mm, including 1 cover, 1 clamp	SH090-105-120-140-161 (except SH140-3 and SH161-3)	Multipack	10
	8173230	T block connector 52 x 57 mm	SH090-105-120-140-161 (except SH140-3 and SH161-3)	Multipack	10
	8173021	T block connector 60 x 75 mm	SH140-3,161-3,184-180	Multipack	10
	8173331	T block connector 80 x 80 mm	SH240-295-380	Multipack	10
	120Z0458	Terminal box 210 x 190 mm, incl. cover	SH180-240-295-380*	Single pack	1
	120Z0150	Terminal box cover	SH380-3	Single pack	1

* except code3

Lubricant



Type	Code no.	Description	Application	Packaging	Pack Size
160SZ	7754023	POE lubricant, 1 litre can	All models	Multipack	12
160SZ	120Z0571	POE lubricant, 2.5 litre can	All models	Multipack	4

Miscellaneous



Type	Code no.	Description	Application	Packaging	Pack Size
	8156019	Sight glass with gaskets (black and white)	All models	Multipack	4
	8156129	Gasket for oil sight glass, 1"1/8 (white teflon)	All models	Multipack	10
	7956005	Gasket for oil sight glass, 1"1/8 (white teflon)	All models	Multipack	50
	8154001	Danfoss Commercial Compressors blue spray paint	All models	Single pack	1

Tandem kits including



Type	Code no.	Description	Application	Packaging	Pack size
	7777044	Suction washer, rigid spacer, sleeve for oil connect	SH182.212.242.282.322	Single pack	1
	7777043	Suction washer, rigid spacer, sleeve for oil connect	SH195.210.230	Single pack	1
	7777042	Suction washer, rigid spacer, sleeve for oil connect	SH260.281.301	Single pack	1
	7777052	Suction washer, rigid spacer, sleeve for oil connect	SH304.324.345	Single pack	1
	120Z0792	Suction washer, grommets, sleeve for oil connect	SH360.482.590.760	Single pack	1
	7777054	Suction washer, rigid spacer, sleeve for oil connect	SH368	Single pack	1
	120Z0796	Suction washer, grommets, sleeve for oil connect	SH420.535.675	Single pack	1
	120Z0795	Suction washer, grommets, sleeve for oil connect	SH475.560	Single pack	1
	120Z0791	Suction washer, grommets, sleeve for oil connect	SH620	Single pack	1

Trio kits



Type	Code no.	Description	Application	Packaging	Pack size
	7777051	Suction washer, rigid spacer, sleeve for oil connect	SH483	Single pack	1
	120Z0794	Suction washer, grommets, sleeve for oil connect	SH550.720.885 (right suction)	Single pack	1
	120Z0793	Suction washer, grommets, sleeve for oil connect	SH550 (left suction)	Single pack	1
	120Z0790	Suction washer, grommets, sleeve for oil connect	SH1140 (right suction)	Single pack	1
	120Z0640	Suction washer, rigid spacer, grommets, sleeve	SH552	Single pack	1
	120Z0784	Suction washer, grommets, sleeve for oil connect	SH720.885 (left suction)	Single pack	1
	120Z0783	Suction washer, grommets, sleeve for oil connect	SH1140 (left suction)	Single pack	1

Previous Version	Current Version
• Page 12: Updated charge limit table in Refrigerant charge limits • Page 17 & 38: SH780 suction: 2"5/8 • Page 48: Updated Kit Trio code no. in Trio units SH550 to SH1455 • Page 50: Updated Kit code no. & suction washer in trio units SH550-720-885-1140 left suction • Page 51: Updated Composition of the kits • Page 59: Updated Trio models in Suction washer selection • Page 62-65: Updated Solder sleeve, Rotolock nut & Trio kits accessories with new code no	• implementation of new baseplate on SH throughout the document.

ENGINEERING
TOMORROW

Danfoss Commercial Compressors

is a worldwide manufacturer of compressors and condensing units for refrigeration and HVAC applications. With a wide range of high quality and innovative products we help your company to find the best possible energy efficient solution that respects the environment and reduces total life cycle costs.

We have 40 years of experience within the development of hermetic compressors which has brought us amongst the global leaders in our business, and positioned us as distinct variable speed technology specialists. Today we operate from engineering and manufacturing facilities spanning across three continents.



Danfoss Turbocor Compressors



Danfoss Inverter Scrolls



Danfoss Scrolls



Danfoss Optyma Condensing Units



Danfoss Maneurop Reciprocating Compressors



Danfoss Light Commercial Refrigeration Compressors

Our products can be found in a variety of applications such as rooftops, chillers, residential air conditioners, heatpumps, coldrooms, supermarkets, milk tank cooling and industrial cooling processes.

member of:
ASERCOM
www.asercom.org

Danfoss A/S
Climate Solutions • danfoss.com • +45 7488 2222

Any information, including, but not limited to information on selection of product, its application or use, product design, weight, dimensions, capacity or any other technical data in product manuals, catalogues descriptions, advertisements, etc. and whether made available in writing, orally, electronically, online or via download, shall be considered informative, and is only binding if and to the extent, explicit reference is made in a quotation or order confirmation. Danfoss cannot accept any responsibility for possible errors in catalogues, brochures, videos and other material.
Danfoss reserves the right to alter its products without notice. This also applies to products ordered but not delivered provided that such alterations can be made without changes to form, fit or function of the product.
All trademarks in this material are property of Danfoss A/S or Danfoss group companies. Danfoss and the Danfoss logo are trademarks of Danfoss A/S. All rights reserved.

AB230286438491en-001601

© Danfoss | DCS (CC) | 2026.05