SAMSUNG

SUBMITTAL AJ024TXJ3CH/AA (JXH24J3T)

Samsung FJM Series, 3 Port Condensing Unit

Job Name _____ Location _____
Purchaser _____ Engineer _____
Submitted to _____ Reference ☐ Approval ☐ Construction ☐
Unit Designation _____ Schedule # _____

Model	US Code		JXH24J3T
	Model Number		AJ024TXJ3CH/AA
Performance*	Capacity (standard / max.)	Cooling (Btu/h)	22,000 / 22,000
		Heating (Btu/h)	25,000 / 29,600
	Minimum Cooling Capacity (Btu/h)		6,500
	Minimum Heating Capacity (Btu/h)		4,300
	SEER (Ducted / Mixed / Non-ducted)		17.0 / 18.0 / 19.0
	EER (Ducted / Mixed / Non-ducted)		10.1 / 11.4 / 12.7
	HSPF (Ducted / Mixed / Non-ducted)		9.0 / 9.5 / 10.0
Power	Voltage	(ø/V/Hz)	1 / 208-230 / 60
	Rated Current (amps) [1]	Cooling (low / std. / max.)	2.6 / 8.3 / 8.7
		Heating (low / std. / max.)	1.9 / 8.5 / 14.1
	Max. Breaker	Amps	25
	Minimum Circuit Ampacity (A)		19.5
Dimensions	W X H X D	Inches	34 5/8 X 31 7/16 X 12 3/16
	Weight	lbs.	125.7
Noise Level	Cooling (Max.)	dB (A)	48
	Heating (Max.)	dB (A)	51
Operating Temperatures	Cooling		14 ~ 114.8°F (-5 ~ 46.0°C)
	Heating		5 ~75°F (-15 ~ 24.0°C)
Pipe Connections	High Side		1/4" X 3
	Low Side (suction)		3/8" X 1 + 1/2" X 2
	Maximum Individual Line Set Length		82 ft
	Maximum Line Set Length (total)		230 ft
	Maximum Vertical Separation	Outdoor to Indoor	49 ft
		Highest to Lowest Indoor	25 ft
	Included Pipe Adapter		2 - 1/2" X 3/8"
Condenser Fan	Motor		BLDC With Propeller Fan (1)
	Output	Watts / FLA	125 / 1.28
		CFM	1,667
Compressor	Type		Twin BLDC Rotary Inverter
	RLA	Amps	13.3
Heat Exchanger	Type		Aluminum Fin - Copper Tube
	Rows		2
Refrigerant	Type		R410A
	Control Method		Electronic Expansion Valve
	Factory Charge		93.5 oz
	Charged for		131 ft
	Additional Refrigerant		0.11 oz/ft over 131 ft
Accessories	Wall Bracket		☐ CKN-250
Certifications	Safety		ETL (UL 1995)
	AHRI Certification Number	Non-Ducted	205291854
		Ducted	205236962
		Mixed	205343312
Warranty	10 Years compressor, 10 year parts, 1 year limited labor (registration required)		

* Certified in accordance with the AHRI Unitary Small Air-Source Heat Pumps (USHP) Certification Program which is based on the latest edition of AHRI Standard 210/240. Refer to www.AHRIdirectory.org for current reference numbers.

[1] Rated current is based on highest combination ratio of non-ducted indoor units.

Samsung HVAC maintains a policy of ongoing development, specifications are subject to change without notice.

- Auto or manual addressing of indoor units
- The outdoor unit shall supply power individually to the indoor units via 14 AWG X 3 power wire
- Soft-start to reduce current demand during compressor start
- Auto-restart after power loss
- System can be set up as heating/cooling, cooling only, or heating only via outdoor unit option setting.
- Available maximum current setting option to reduce maximum operating current.
- System energy consumption can be viewed using Samsung SmartThings mobile app (not revenue grade, for reference only).

Construction
The outdoorunit shall be galvanized steel with abaked on powder coated finish for durability

Heat Exchanger
The heat exchanger shall be mechanically bonded fin to copper tube

Controls
Control signal shall be a DDC type signal

Interconnect control wire between outdoor and indoor units shall be 16AWG X 2

The system shall integrate with the Samsung Controls Solution without the use of an interface module.

Refrigerant System
The refrigerant shall be R410A

The compressor shall be hermetically sealed, inverter controlled, Twin BLDC Rotary

Refrigerant flow shall be controlled by 3 separate electronic expansion valves at outdoor unit

Compatibility
Will only operate with Samsung evaporator model numbers:
AR**TSFABWKNCV (RNS**ABT): 7,000 - 18,000 Btu/h models
AR**TSFYBWKNCV (RNS**YBT): 7,000 - 18,000 Btu/h models
AJ***TNNDCH/AA (JNH**NDT): 9,000 - 18,000 Btu/h models
AJ***TNLDCH/AA (JNH**LDT): 9,000 - 18,000 Btu/h models
AJ***TNJDCH/AA (JNH**JDT): 9,000 - 18,000 Btu/h models

Proper sizing and installation of equipment is critical to achieve optimal performance. Split system air conditioners and (excluding ductless systems) must be matched with appropriate coil components to meet ENERGY STAR® criteria. Ask your contractor for details or visit www.energystar.gov.

© 2020 Samsung HVAC
SHA-FJM-04082020

888-699-6067
www.SamsungHVAC.com

SAMSUNG

SUBMITTAL AJ024TXJ3CH/AA (JXH24J3T)

Samsung FJM, 3 Port Condensing Unit

Dimensional drawing

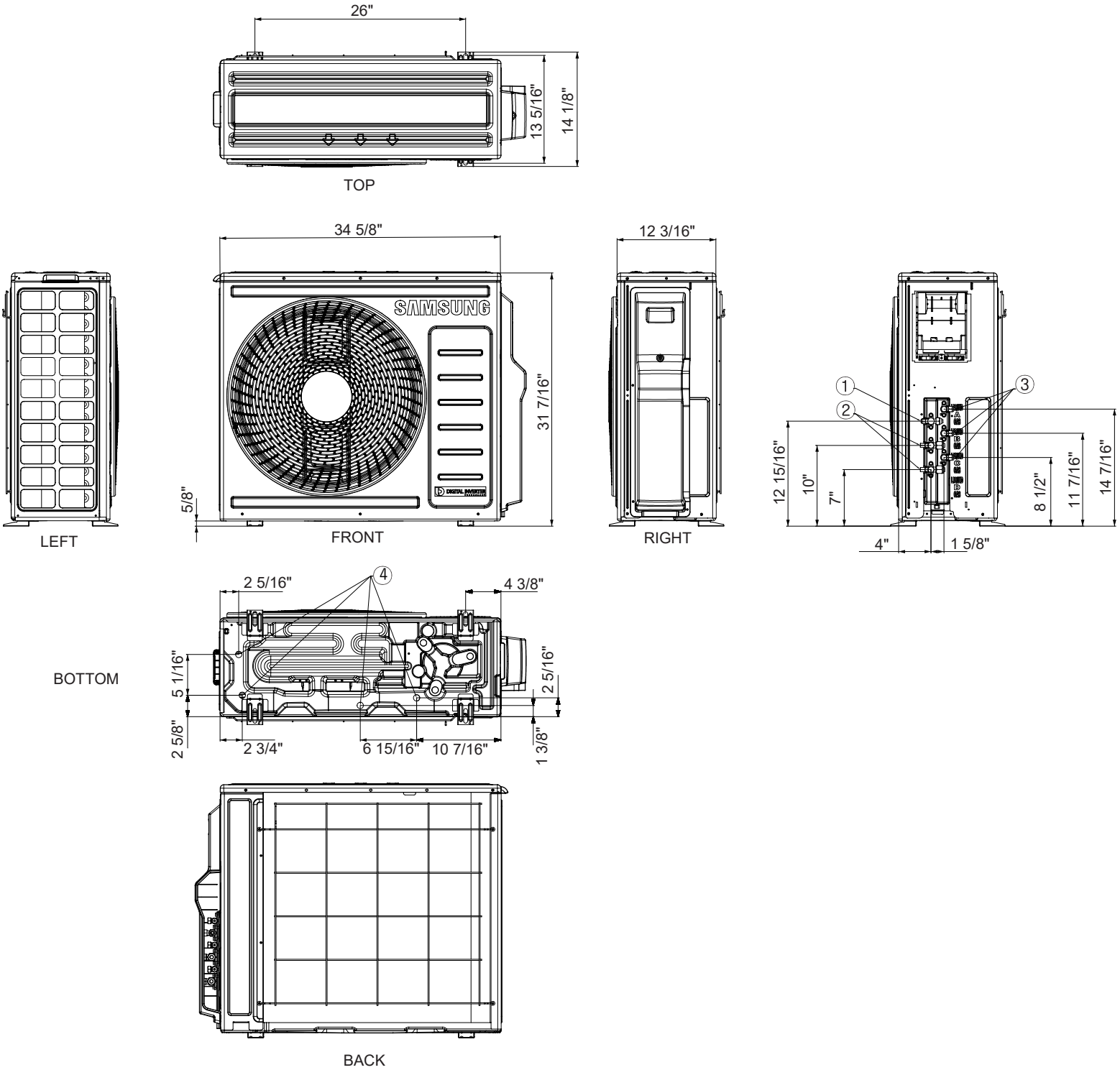

No.	Name	Description
1	Refrigerant suction pipes	ø3/8" x 1 each
2		ø1/2" x 2 each
3	Refrigerant liquid pipes	ø1/4" x 3 each
4	Drain holes	Connection with provided drain fitting

Indoor Unit Connection Options

	Indoor unit Capacity (Btu/h)		
	A	B	C
2 Indoor Units	7,000	7,000	
	7,000	9,000	
	7,000	12,000	
	7,000	15,000	
	7,000	18,000	
	9,000	9,000	
	9,000	12,000	
	9,000	15,000	
	9,000	18,000	
	12,000	12,000	
	12,000	15,000	
	12,000	18,000	
	15,000	15,000	
3 Indoor Units	7,000	7,000	7,000
	7,000	7,000	9,000
	7,000	7,000	12,000
	7,000	7,000	15,000
	7,000	9,000	9,000
	7,000	9,000	12,000
	7,000	9,000	15,000
	9,000	9,000	9,000
	9,000	9,000	12,000

Must have a minimum of 2 indoor units connected. Will only operate with Samsung evaporator model numbers listed below:

AR**TSFABWKNCV (RNS**ABT): 7,000 - 18,000 Btu/h models
AR**TSFYBWKNCV (RNS**YBT): 7,000 - 18,000 Btu/h models
AJ***TNNDCH/AA (JNH**NDT): 9,000 - 18,000 Btu/h models
AJ***TNLDCH/AA (JNH**LDT): 9,000 - 18,000 Btu/h models
AJ***TNJDCH/AA (JNH**JDT): 9,000 - 18,000 Btu/h models

Basic Wire Connection Diagram

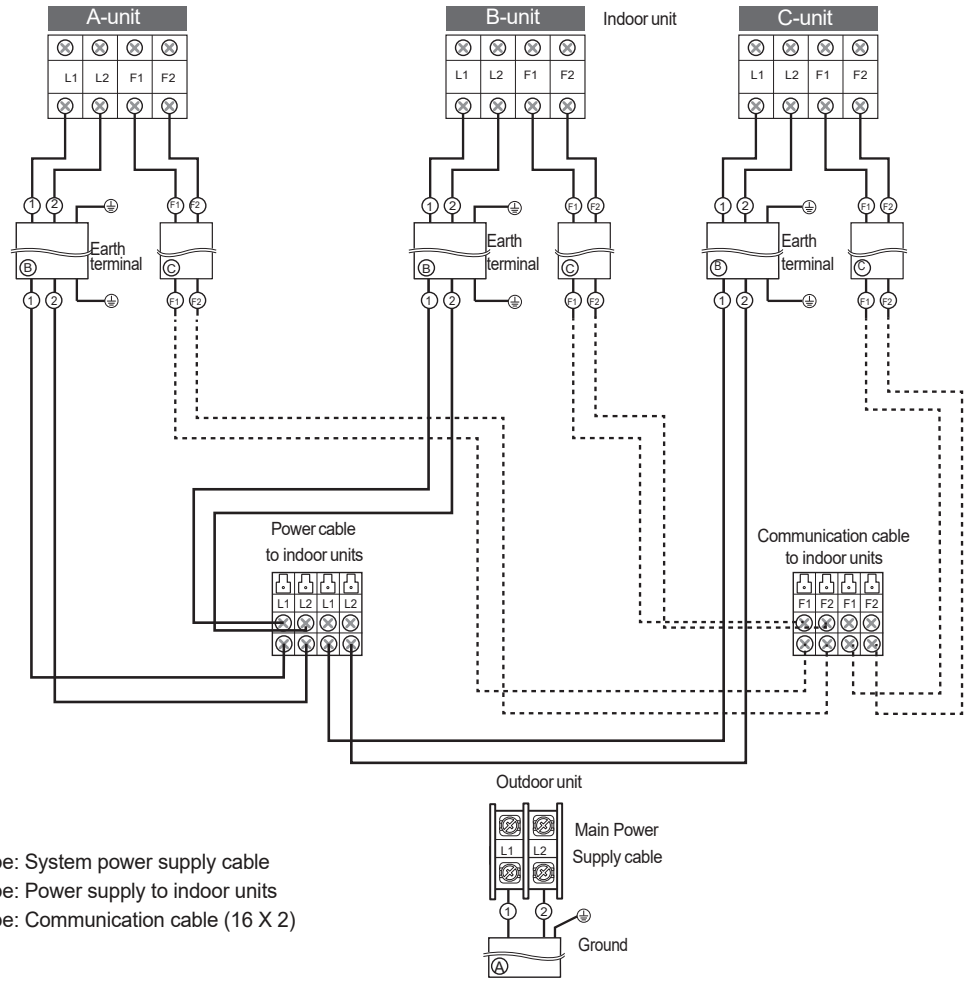

Ⓐ Cable Type: System power supply cable
Ⓑ Cable Type: Power supply to indoor units
Ⓒ Cable Type: Communication cable (16 X 2)

This simple wiring diagram is for reference only. Please refer to installation manuals for full details and requirements.