SAMSUNG

SUBMITTAL AR18TSFYBWKNCV (RNS18YBT) For Multi-Zone Systems
Samsung "Quantum 2.0", wall mounted evaporator

Job Name _____ Location _____
Purchaser _____ Engineer _____
Submitted to _____ Reference ☐ Approval ☐ Construction ☐
Unit Designation _____ Schedule # _____

Specifications

Model	US Code		RNS18YBT
	Model Number		AR18TSFYBWKNCV
Performance	Nominal Capacity	Cooling (Btu/h)	18,000
		Heating (Btu/h)	21,000
Power	Voltage	Ø / V / Hz	1 / 208-230 / 60
	Operating Current (Max.)	Cooling (A)	0.5
		Heating (A)	0.5
Evaporator Fan	Type		BLDC motor with cross-flow fan
	Consumption	Watts	27 X 1
	FLA	Amps	0.12
Airflow	Air Volume (L/M/H/Turbo)	Cooling (CFM)	401 / 435 / 469 / 486
		Heating (CFM)	465 / 525 / 584 / 623
Refrigerant	Type		R410A
	Control Method		Electronic Expansion Valve (at outdoor unit)
Pipe Connections	Indoor & Outdoor	High side (flare)	1/4"
		Low side (flare)	1/2"
Dimensions	W X H X D (in.)	Indoor Unit	41 1/2 X 11 13/16 X 8 7/16
	Weight (lbs.)	Indoor Unit	25.4
	Condensate Connection		11/16" OD
Sound Pressure Level	Low / High	dB(A)	28 / 41
Accessories	Wired Controllers [1]	Advanced	☐ MWR-WG00UN
		Simple Touch	☐ MWR-SH11UN
	Wired Controller Sub-PCB		☐ MIM-A00UN
	Condensate Pump	Aspen Mini Orange	☐ ASP-MO-UNIV 110-250
		Blue Diamond	☐ BD-BLUE-230
	External Temperature Sensor		☐ MRW-TA
	External Contact Control Interface Module [2]		☐ MIM-B14
	Line sets - insulated and flared, interconnect cables included		☐ 25' - ILS2507
			☐ 50' - ILS5007
Safety Certifications			ETL (UL 1995)

[1] Sub-PCB model MIM-A00UN is required when connecting optional wired controllers

[2] When applying MIM-B14 external contact control interface module, MIM-A00UN wired controller sub-PCB is required.

Samsung HVAC maintains a policy of ongoing development, specifications are subject to change without notice. Refer to www.AHRIdirectory.org for current reference numbers.

General Information
- The indoor unit shall have Wi-Fi capability as standard
- The indoor unit shall be powerd by the outdoor unit

Construction
- Indoor unit chassis shall be UL94 V0 with a galvanized steel mounting bracket
- The indoor unit shall have easy-access to wire, pipe, and drain connections via access panel on the bottom of the unit for simple installation and service

Heat Exchanger
- The heat exchangers shall be mechanically bonded fin to copper tube

Indoor Fan
- The indoor fan shall be a single, antibacterial cross-flow type
- Three fan speed settings and auto setting
- Automatic (motorized) vertical swing (up/down) louver and manual horizontal swing (left/right) louvers.

Controls
- The system shall have a built in Wi-Fi adapter as standard to allow control and monitoring using the Samsung SmartThings app (Android, iOS)
- Dual set temperature support when connected to MWR-WG00UN Advanced Wired Controller.
- The indoor unit shall have a simple connection for overflow detection devices or any other normally closed contact for simple unit shutdown
- The indoor unit shall ship with a wireless controller, holder, and batteries
- Wired controller options available

Convenience
- System energy consumption can be viewed using the Samsung SmartThings mobile app or on the indoor unit display using the included wireless controller (not revenue grade, for reference only)
- Auto Clean Function
- 7-segment digital display on front of unit to display temperature and unit status
- Auto changeover
- Good sleep mode
- Quiet mode
- Dry mode
- Simple ON/OFF time function – Using the wireless controller specify the ON and/or OFF times
- Electro-static, washable, main filter as standard accessible from the top of unit
- Filter cleaning reminder

Compatibility
Will only operate with Samsung outdoor unit model numbers:
AR18TSFYBWKXCV (RXS18YBT), AJ024TXJ3CH/AA (JXH24J3T), AJ036TXJ4CH/AA (JXH36J4T), AJ048TXJ5CH/AA (JXH48J5T), AJ024TXS4CH/AA (JXH24S4T), AJ030TXS4CH/AA (JXH30S4T), AJ036TXS4CH/AA (JXH36S4T)

© 2020 Samsung HVAC

SUBMITTAL AR18TSFYBWKNCV (RNS18YBT) For Multi-Zone Systems

Samsung "Quantum 2.0", wall mounted evaporator

Indoor unit dimensional drawing
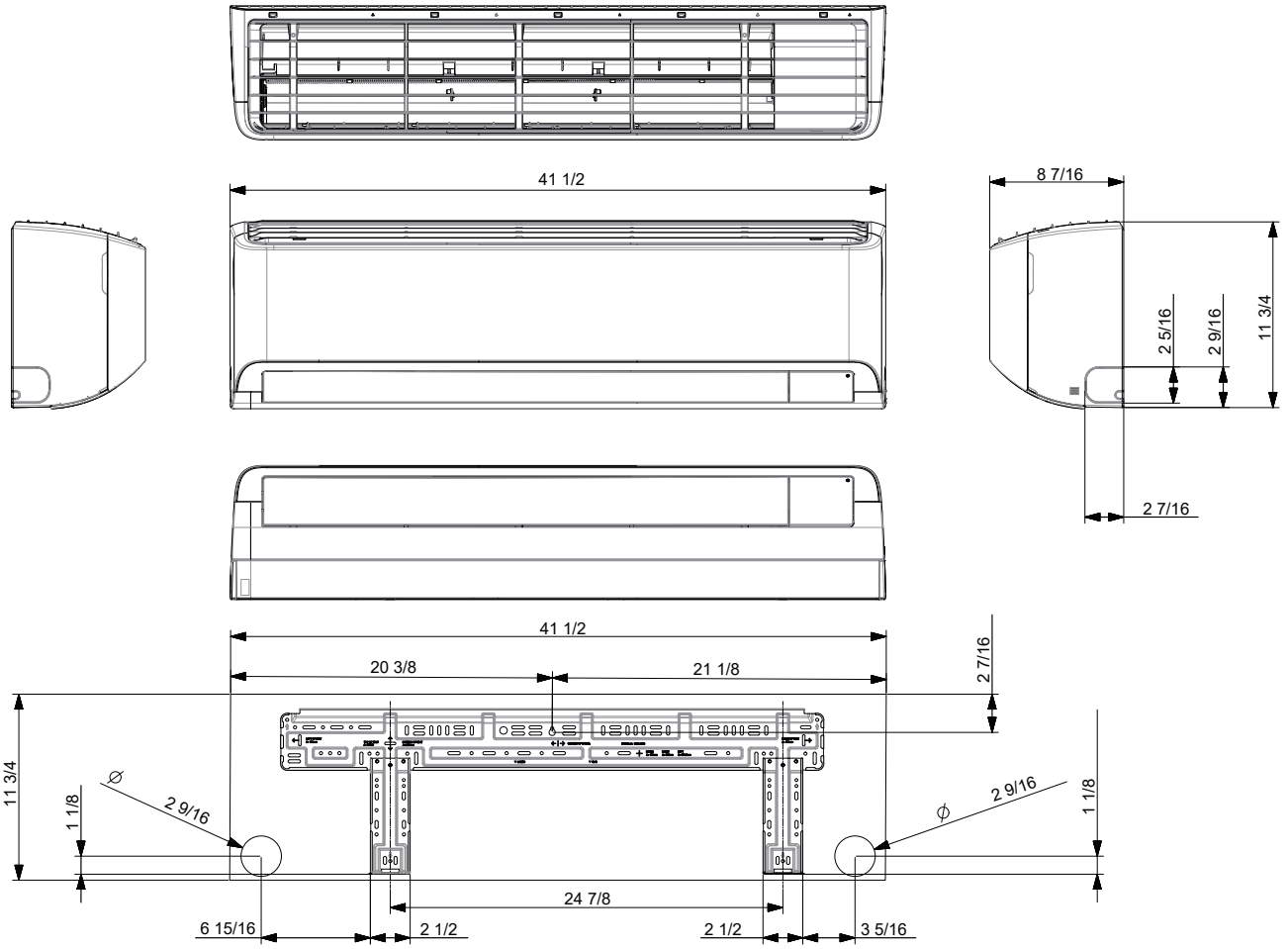
Unit: inches