AR24BSFCMWKXCV Outdoor Exploded Views and Parts List

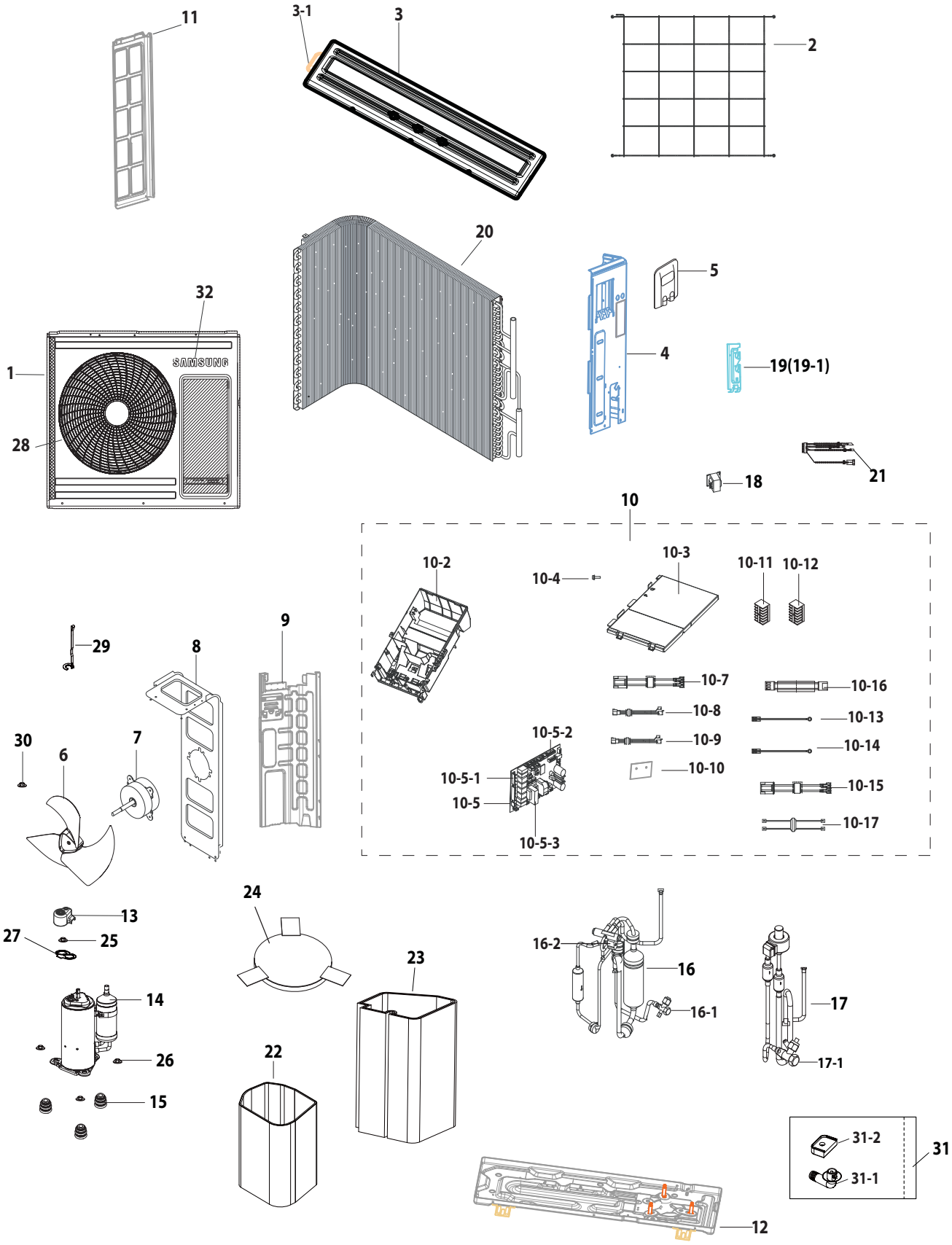

Tube Part Exploded view

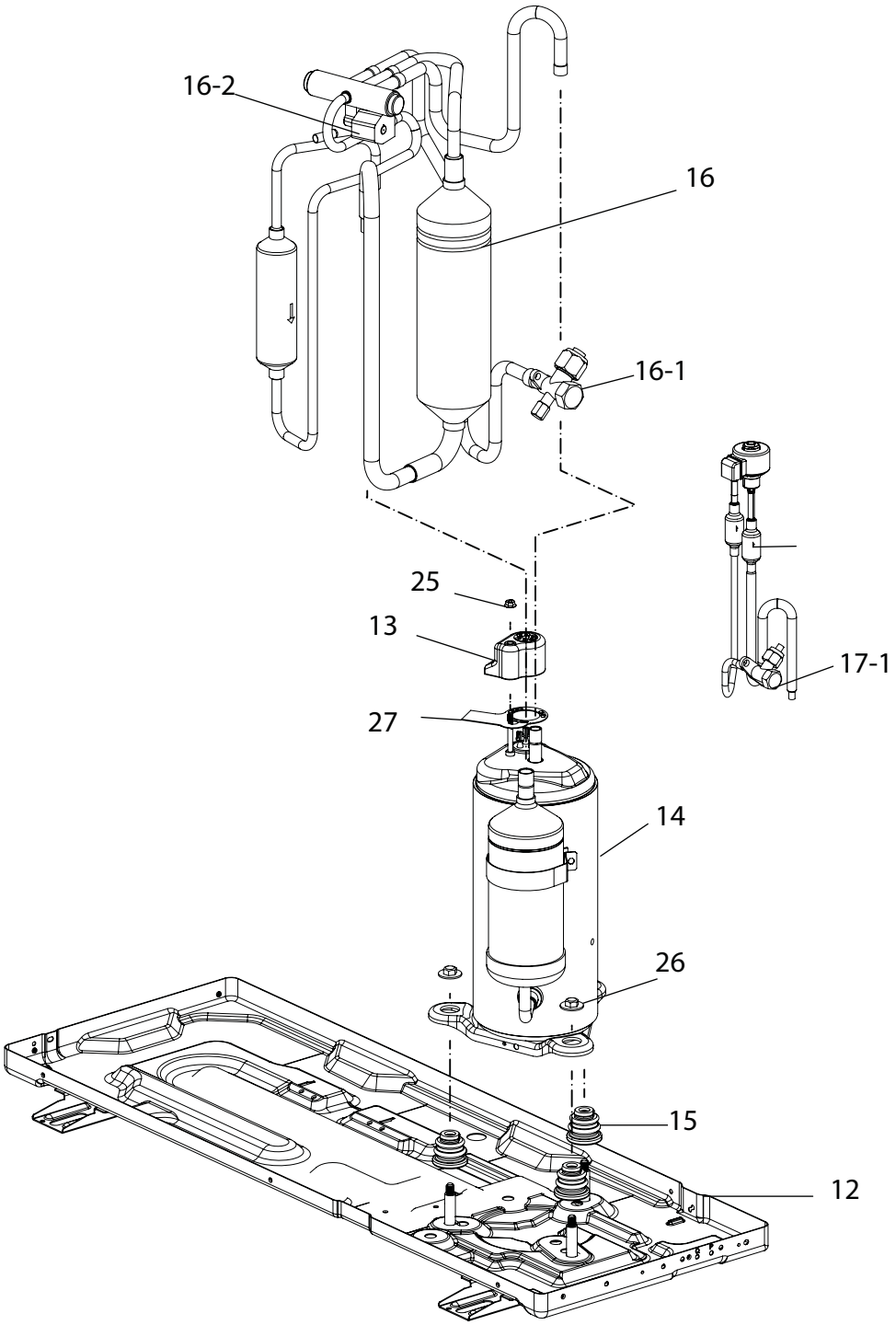

Control Part Exploded View

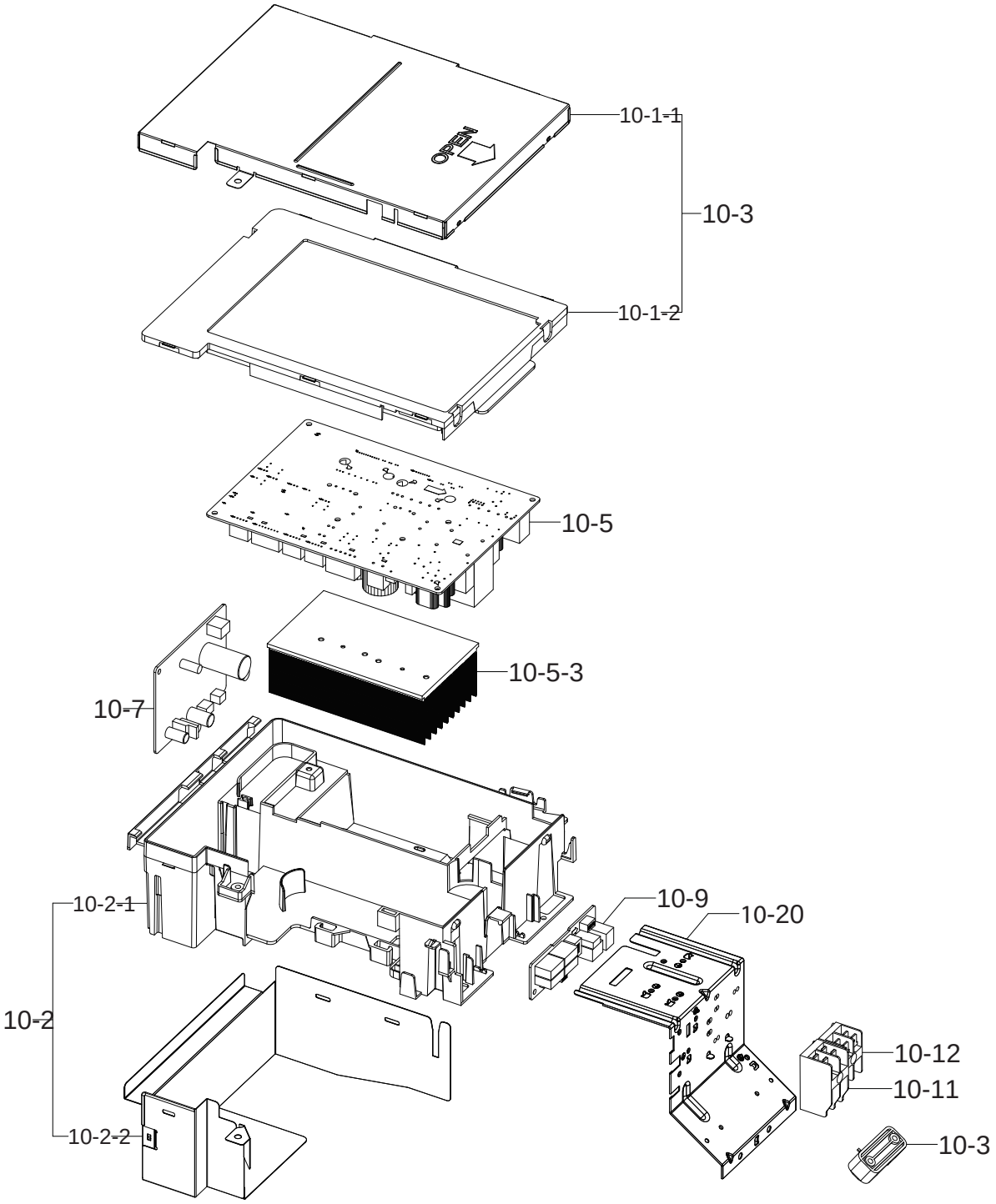

Wiring Diagram

10-5 PCB INVERTER

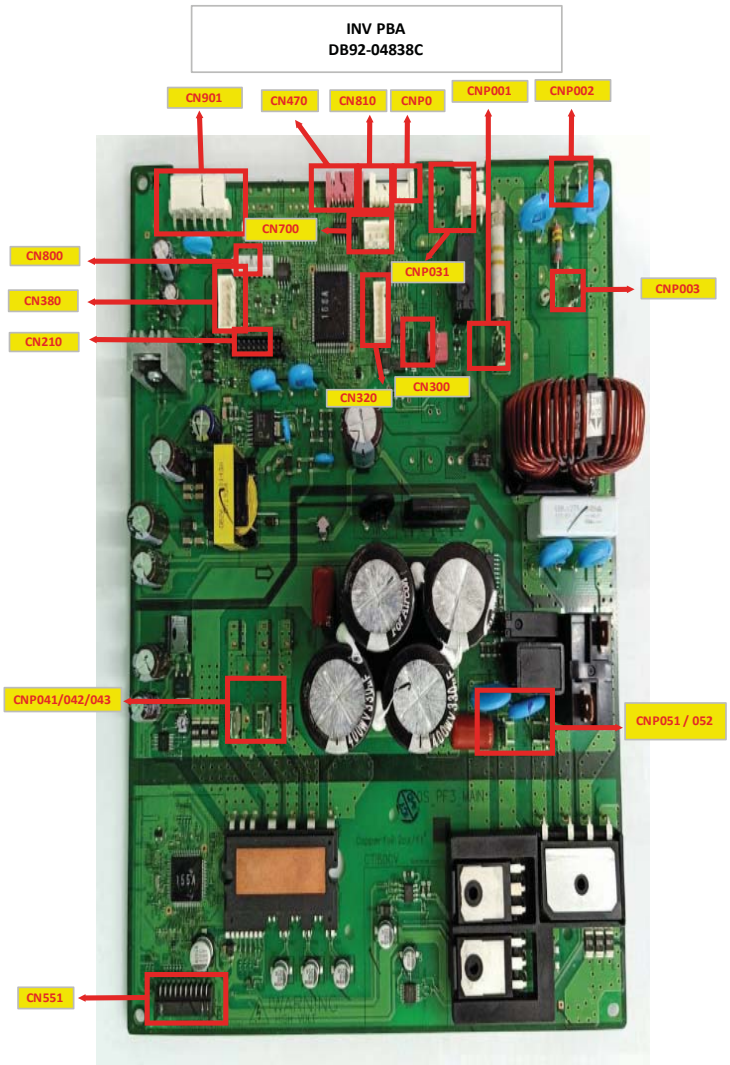

Material Code	No.	Connecting Point1	
		PCB	CONNECTOR No
DB93-10905B	10-8	INV	CNP041/042/043
DB93-12121B	10-13	INV	CNP003
DB93-12121B	10-14	INV	CNP004
DB93-16402A	10-15	INV	CN300
DB93-16403A	10-16	INV	CNP031
DB93-17175A	10-7	INV	CNP051/052
DB93-17207A	10-9	INV	CNP001 / 002
DB95-05164B	21	INV	CN470

Circuit Diagram

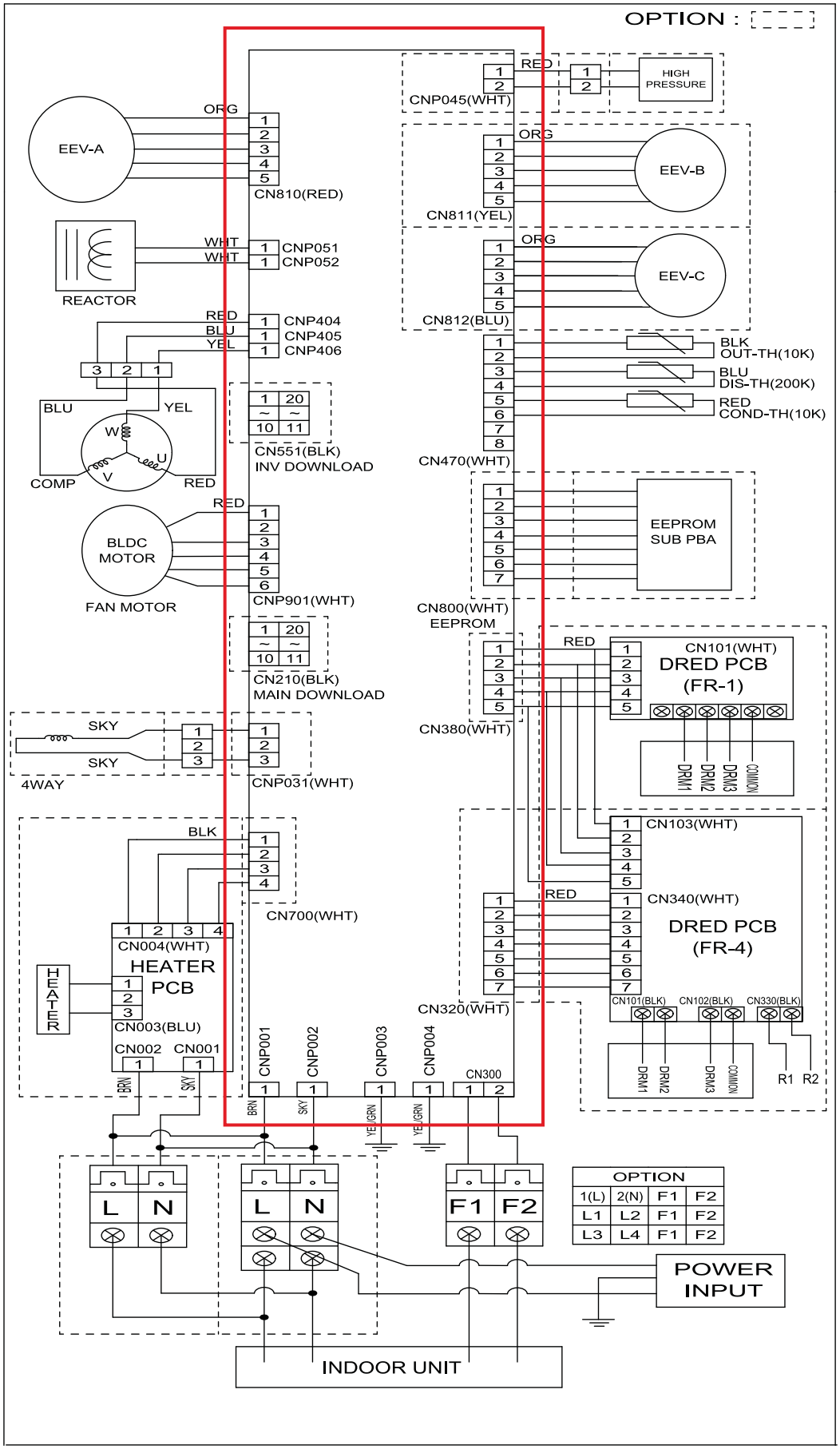

Partlist No.	10-5
PBA	MAIN PBA

Parts List

AR24BSFCMWKXCV					
No.	Parts Code	Parts Description	Spec.	Quantity	SA/SNA
1	DB90-11282A	ASSY CABI FRONT	AJ068RCJ3EG/EU,P520	1	SA
2	DB63-04169A	GUARD COND	P520,MSWR,EARTH BROWN,SSEC	1	SA
3	DB90-07183N	ASSY CABI TOP	P520,PMA	1	SA
3-1	DB64-00967B	HANDLE-OUTDOOR	FAC,PP,T3,W24.8,L110,MT62AW,EARTH BROWN	1	SA
4	DB90-11317B	ASSY CABI SIDE-RH	AR18TSFACWKXCV,P-520 KCV	1	SA
5	DB90-07179K	ASSY COVER CONTROL	AR18TSFACWKXCV,QMD	1	SA
6	DB94-04381A	ASSY FAN PROPELLER	DVM S ECO,520	1	SA
7	DB31-00579A	MOTOR FAN	125W,DC310V,CLASS E	1	SA
8	DB90-11280A	ASSY BRACKET MOTOR	AJ068RCJ3EG/EU,P520	1	SA
9	DB94-07644A	ASSY PARTITION	AJ068RCJ3EG/EU,P520 PF3	1	SA
10-2	DB61-05917A	CASE CONTROL	Q Chassis,ABS,L392.3,VICTORY GRAY,VE-0858,5V-A	1	SA
10-3	DB61-04910A	CASE CONTROL-UPPER	Q CHASSIS,ABS,VICTORY DARK GRAY,5V,VE-0858,SS	1	SA
10-5	DB92-04838A	ASSY PCB INVERTER	INVERTER,QMD RAC AR9500T,197x242mm,220V-240	1	SA
10-5-1	3501-001268	RELAY-POWER	12V,0.9W,25000mA,1FormA,20ms,10ms	1	SA
10-7	DB93-17175A	ASSY CONNECTOR WIRE-REACTOR	2,1015,16,WHT,MG630591R/WHT,MG633976K/WHT,	1	SA
10-8	DB93-10905B	ASSY CONNECTOR WIRE-COMP	3,1015,14,RED,MG624757/WHT,MG630591R/WHT,MC	1	SA
10-9	DB93-17207A	ASSY CONNECTOR WIRE-POWER	2,1015,14,BRN,175022-1,MG630591R/WHT,-,300,-,-,T	1	SA
10-10	DB67-01713A	RUBBER	UB1,SILICON RUBBER,T0.3	1	SA
10-11	DB37-00036B	TERMINAL BLOCK	2P(4SCREW),MELAMINE,600V,30A,30.2X48X26.2mm,	1	SA
10-12	DB65-00274A	TERMINAL BLOCK	TERMINAL BLOCK,Polycarbonate, Phenol,AC300V,20A,	1	SA
10-13	DB93-12121B	ASSY CONNECTOR WIRE-EARTH WIRE	1,1015,18,YEL/GRN,173724-1,ST710197-2,-,240,-,-,-,	1	SA
10-14	DB93-12121B	ASSY CONNECTOR WIRE-EARTH WIRE	1,1015,18,YEL/GRN,173724-1,ST710197-2,-,240,-,-,-,	1	SA
10-15	DB93-16402A	ASSY CONNECTOR WIRE-COMM	2,1007,22,RED,YH396-02VR/RED,175020-1,-,250,PVC/	1	SA
10-16	DB93-16403A	ASSY CONNECTOR WIRE-AC SIGNAL	2,1015,18,SKY,YH396-03VR/WHT,MG621173/WHT,-,	1	SA
10-17	DB93-11274B	ASSY CONNECTOR WIRE-COMP OUT	3,3343,14,RED,ST730269-3,ST730190-2,-,540,PVC TU	1	SA
11	DB90-11279B	ASSY CABI SIDE-LF	AR18TSFACWKXCV,P-520 NORDIC	1	SA
12	DB90-10990H	ASSY BASE OUT	AR18TSFABWKXCV,P520 48F	1	SA
13	DB63-02310A	COVER TERMINAL	SABIC N1250,2.5,BLACK,N1250,no OLP,N1250	1	SA
14	UG8TH8265FEW	RCP,COMP,RCP,F,R410A		1	-
15	DB63-02297A	GROMMET ISOLATOR	48F,NR,L32.5,ID11.5,OD26.0,BLACK,BLACK	3	SA
16	DB96-24917B	ASSY TUBE 4WAY	P520,20-RIH-13, 5/8	1	SA
16-1	DB62-09658A	VALVE SERVICE-SPINDLE	BRASS,5/8",R410A, FLARE,15.88,R410A,15.88mm	1	SA
16-2	DB96-06998G	ASSY-SOLENOID COIL	MH080,ASSY,L370	1	SA
17	DB96-24631A	ASSY TUBE EEV	AC071RXADKG/EU,ASSY	1	SA
17-1	DB62-09652A	VALVE SERVICE-SPINDLE	A/C,BRASS,FLARE,R410A,6.35mm	1	SA
18	DB27-00043C	COIL HARMONIC	5mH,124.5*85.8*73,20A,Screw	1	SA
19	DB61-05432B	BRACKET-VALVE PAINTING	P/Q,GI-SGCC,1.5,102,218,GY0180,RAC	1	SA
20	DB96-24633A	ASSY COND-MODULE	P,L892.8mm	1	SA
21	DB95-05164B	ASSY THERMISTOR OUT	SMH200-08H,L650,10kohm,3%,25C,7phi	1	SA
22	DB63-02029B	FELT-COMP SOUND A	MH040,FELT/PVC,T5+T1.6+T5,-,-,-,-	1	SA
23	DB63-03052A	FELT-COMP SOUND	RC071DHXEA,FELT/PVC,T5+T2	1	SA
24	DB63-03053A	FELT-COMP SOUND	RC071DHXEA,FELT/PVC,T5+T2	1	SA
25	6021-001142	NUT-HEXAGON FLANGE	M5,ZPC(WHT),SWRCH10A,SERRATION	1	SA
26	DB60-30028A	NUT-FLANGE	HWH,M8,ZPC(WHT),SWRCH18A,P1.25/Washer Type(	3	SA
28	DB63-04021A	GUARD FAN	P chassis,PP,T2.5,EARTH BROWN,-,MT62AW	1	SA
29	DB81-00635A	SPRING ETC-SENSOR	DVM-SYSTEM,STS304,ID2.5,OD4.5,L44,T0.3,W2,NON	2	SA
30	DB60-00405A	FASTENER-WASHER	RC100ZHXEA,SWRCH10A,M8	1	SA
31	DB97-02066C	ASSY ACCESSORY	HP,NO,18000,NO,-,N,SH18AW6X,SSEC	1	SA
31-1	DB67-20011A	DRAIN-PLUG OUT	ASH-1814ER,PP,NATURAL	1	SA
31-2	DB67-01533A	RUBBER-LEG	All frame,NR,BLACK	4	SA
32	DB64-03201B	LOGO	Outdoor Unit,PVC,T0.1,200,286C,transparent PVC	1	SA