AR12BSFCMWKXCV Outdoor Exploded Views and Parts List

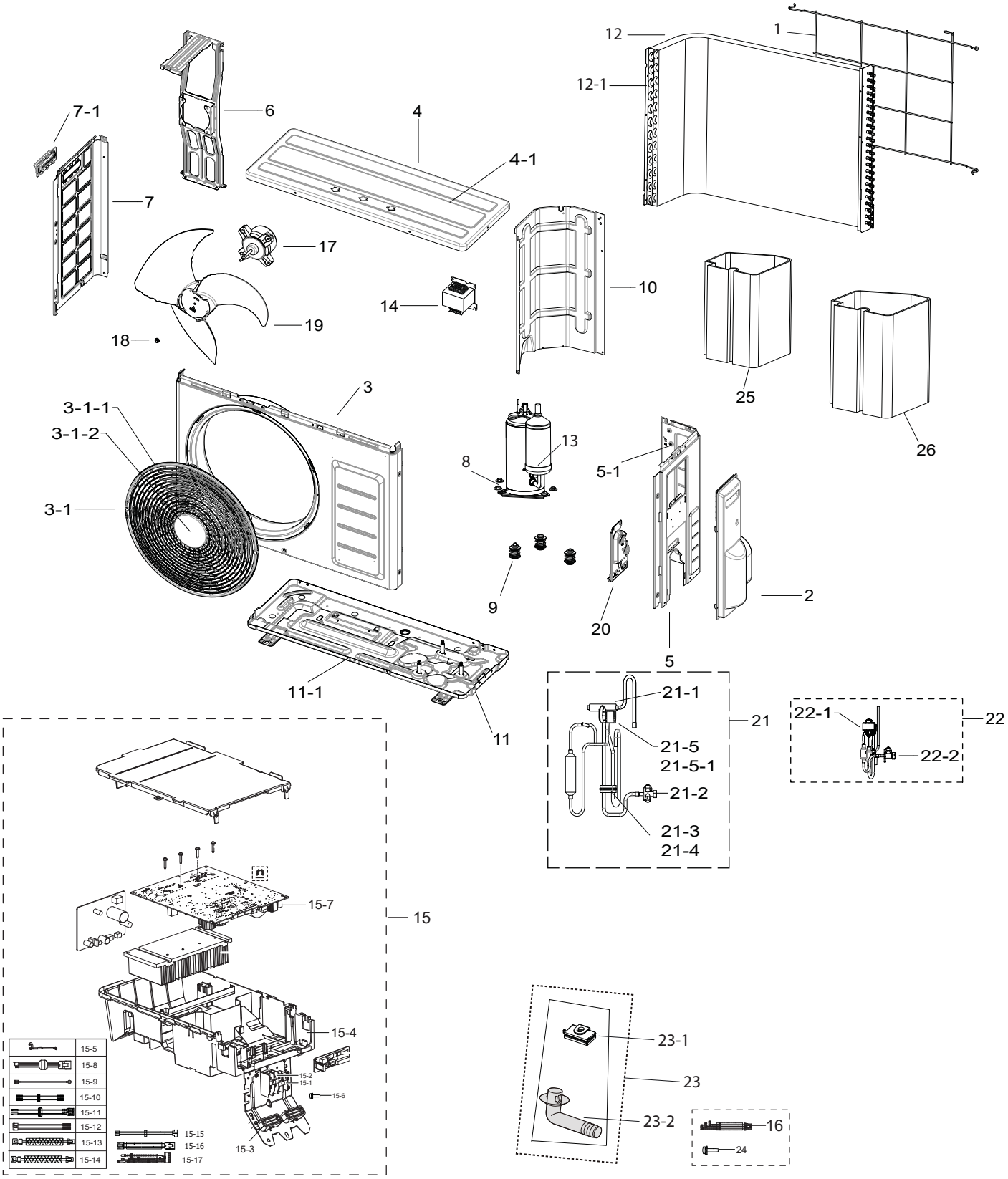

Tube Part Exploded view

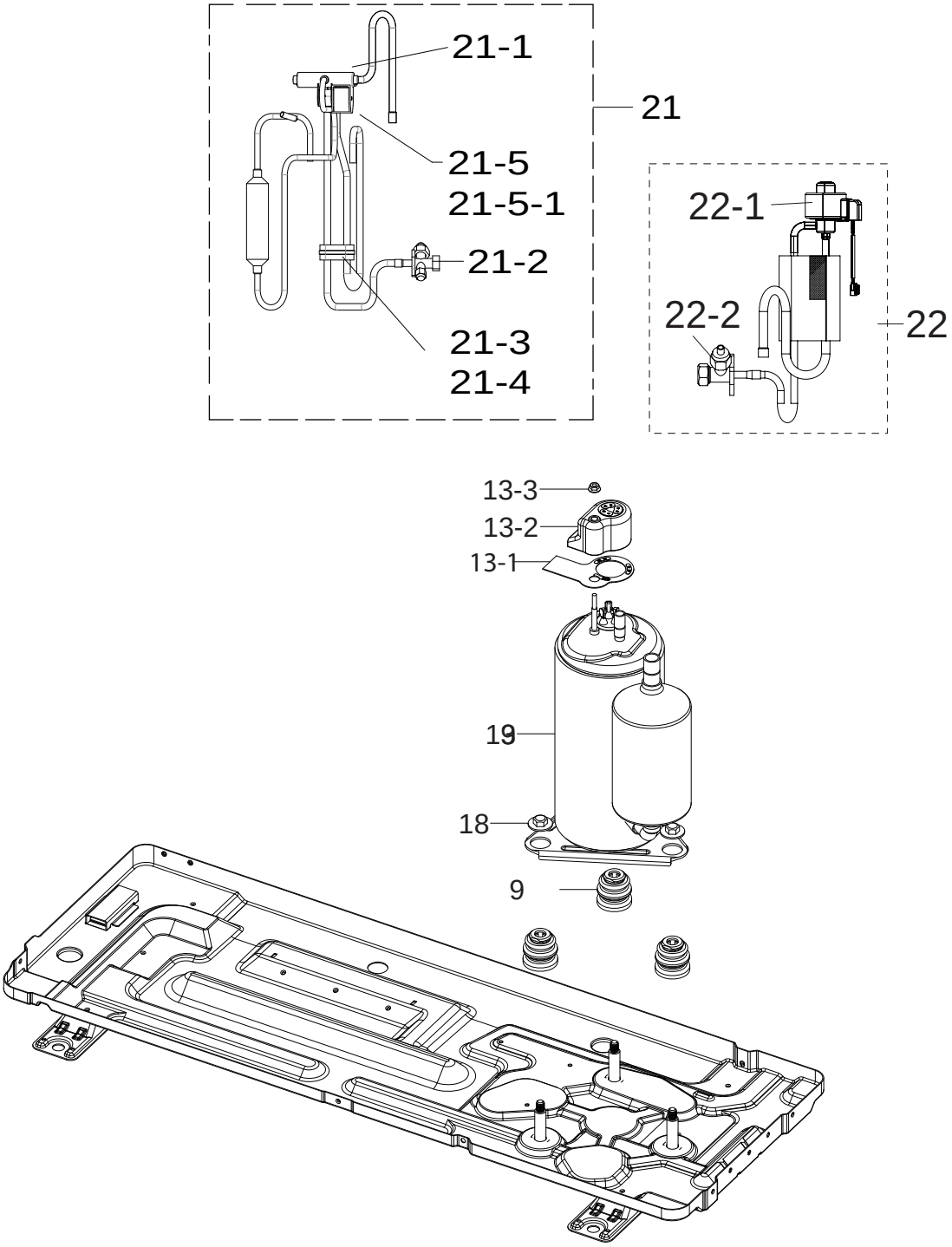

Control Part Exploded View

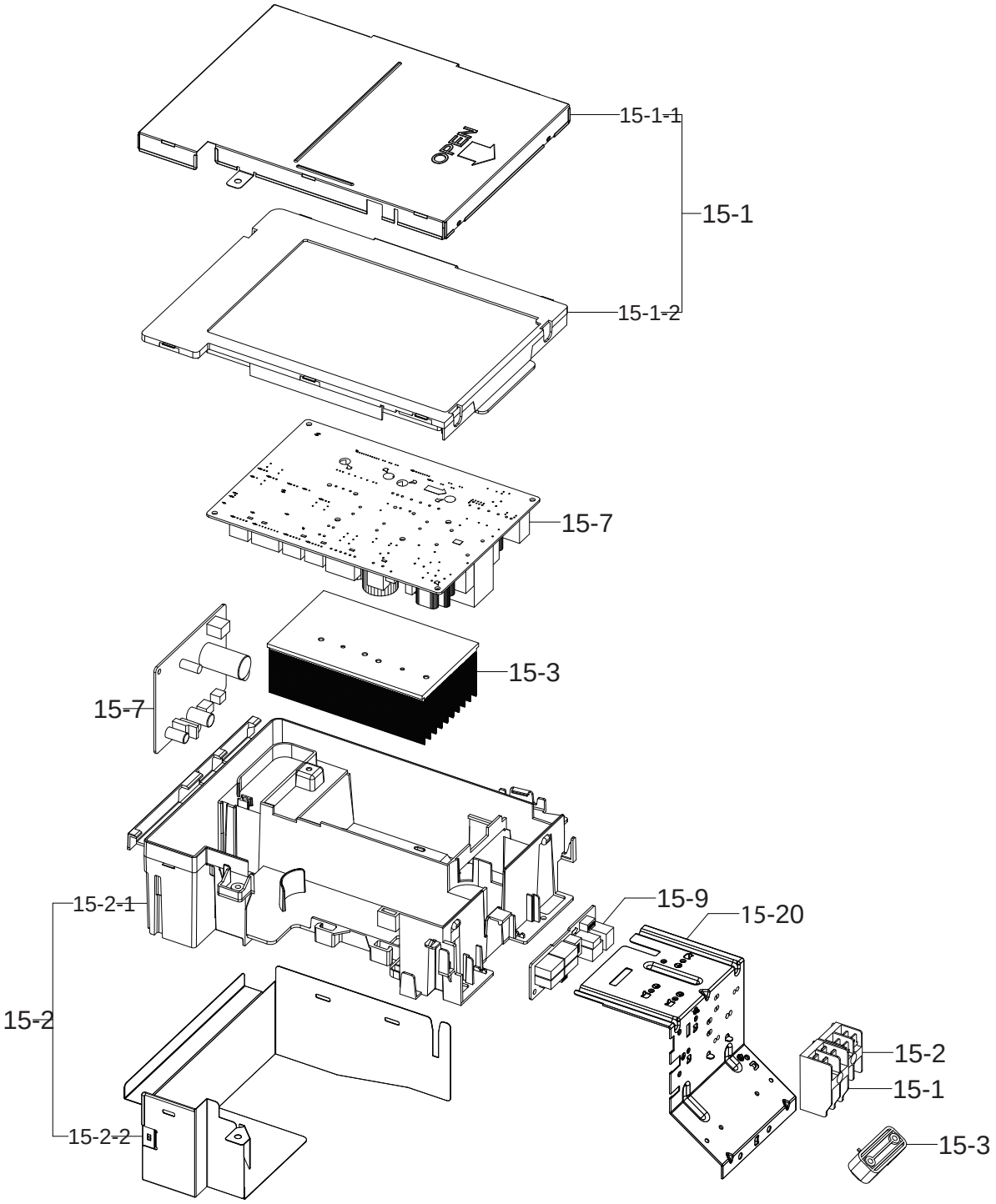

Wiring Diagram

15-7 MAIN PBA

Material Code	No.	Connecting Point 1	
		PCB	Connector No
DB93-09497F	15-8	MAIN	CN210
DB93-17177A	15-16	MAIN	CN031
DB93-17175C	15-15	MAIN	CNP051/052
DB93-16402A	15-12	MAIN	CN810

Circuit Diagram

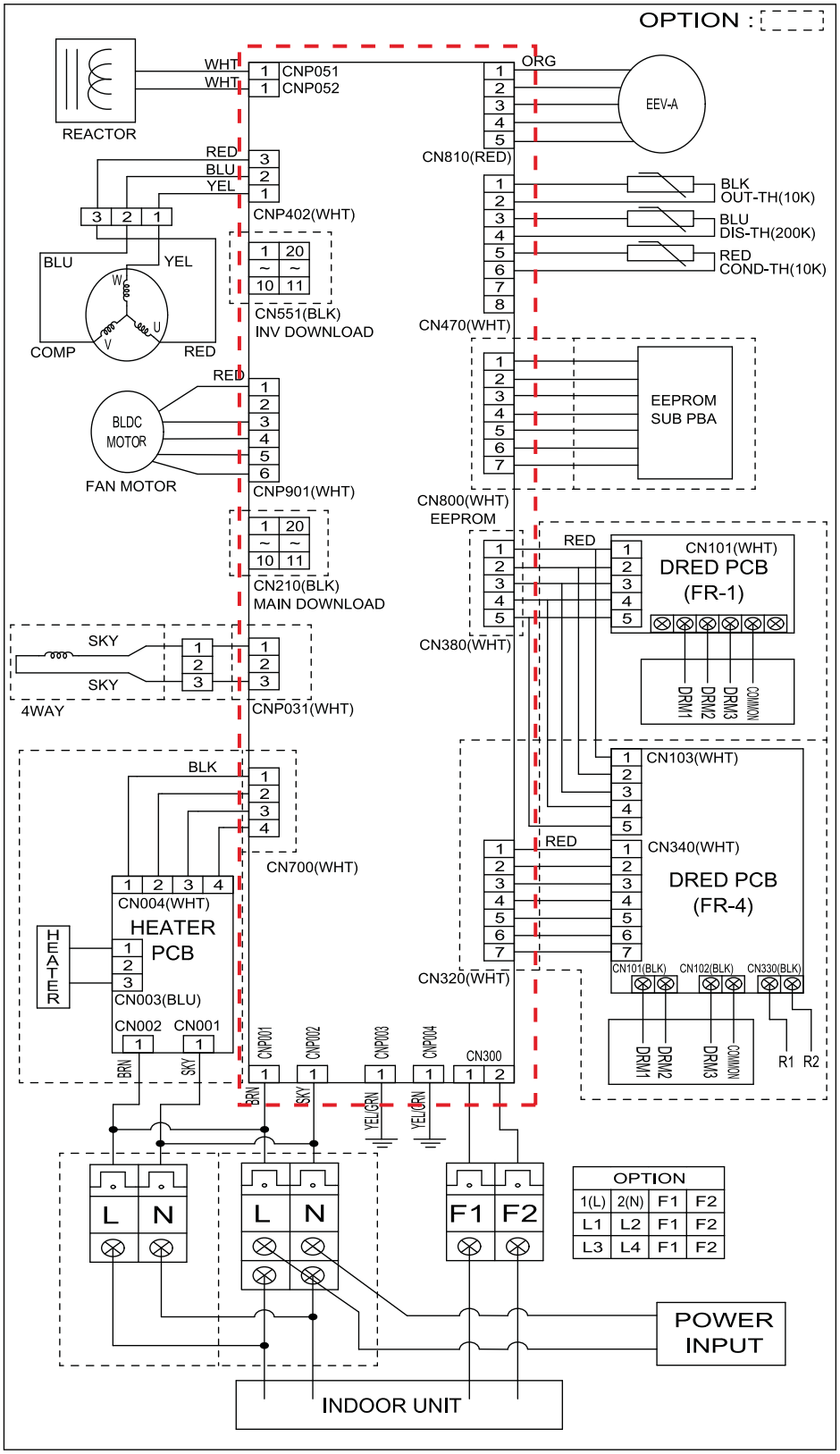

Partlist No.	15-7
PBA	MAIN PBA

Parts List

AR12BSFCMWKXCV					
No.	Parts Code	Parts Description	Spec.	Quantity	SA/SNA
1	DB63-03873A	GUARD COND	F-XS-03,MSWR,T3,EARTH BROWN	1	SA
2	DB90-06381F	ASSY COVER-VALVE	NEW_WW,GY0108	1	SA
3	DB90-07737P	ASSY CABI FRONT	NEW SI_FIN&TUBE COND,NEW ASSY GUARDFAN	1	SA
3-1	DB90-08047B	ASSY GUARD-FAN	N-WW	1	SA
3-1-1	DB62-02912T	SEAL-GUARD FAN	-,LEX FOAM,-,T3,W12,L20,-,-,-,-,-,-,-	6	SA
3-1-2	DB63-03660A	GUARD FAN	AR12NVFPCWKXAZ,PP+TD20%,T1,EARTH BROWN	1	SA
4	DB90-07738A	ASSY CABI TOP	F-XS-03_SI CHASSIS,ASSY	1	SA
4-1	DB64-02983B	CABINET TOP	N_SI,GI-SGCC,T0.7,3 Front holes	1	SA
5	DB90-07739Q	ASSY CABI SIDE-RIGHT	TSE N-SI(CV)	1	SA
5-1	DB67-01717A	CAP SCREW	CV Model,SILICON RUBBER,T1.5	2	SA
6	DB90-07834A	ASSY BRACKET MOTOR	F-XS-03(NEW SI),SSEC	1	SA
7	DB90-08039A	ASSY CABI SIDE-LEFT	N-SI,A3050,F-XS-03,GI-SGCC	1	SA
7-1	DB64-00992C	HANDLE-LF	AR12NSPXBWKXAZ,PP+TD20%,T2,W113,L48,MT42S,EAR	1	SA
8	DB60-30028A	NUT-FLANGE	HWH,M8,ZPC(WHT),SWRCH18A,P1.25/Washer Type(WP)	3	SA
9	DB63-03386A	GROMMET ISOLATOR	NR,L33,ID11.5,OD34	3	SA
10	DB67-01402A	PARTITION	F-XS-03,GI-SGCC,T0.6	1	SA
11	DB90-07728M	ASSY BASE OUT	SGMCC, N-SI, 39/44 P,R accum E foot	1	SA
11-1	DB61-05823D	BASE-OUT	N-SI,SGMCC,T1,39/44 E foot	1	SA
12	DB96-23270A	ASSY COND-MODULE	N_SI	1	SA
12-1	DB61-05340A	PLATE-COND LF	AQV12EWH,GI-SGCC,T0.7,SSEC	1	SA
13	DB95-05762A	ASSY COMP	KTN130D42UFR,R32	1	SA
14	DB27-00041B	COIL HARMONIC	5mH,94.5x94x55mm,10A,Screw	1	SA
15-1	DB65-00274A	TERMINAL BLOCK	TERMINAL BLOCK,Polycarbonate, Phenol,AC300V,20A,22x	1	SA
15-2	DB37-00036B	TERMINAL BLOCK	2P(4SCREW),MELAMINE,600V,30A,30.2X48X26.2mm,D4.4	1	SA
15-3	DB61-00250A	HOLDER-WIRE CLAMP	AF25M9970DBX,PA66,BLACK,V-0,FR50	2	SA
15-4	DB61-06722A	CASE CONTROL-OUT	ABS,T2,L0,VICTORY GRAY,VE-0858	1	SA
15-5	DB81-00635A	SPRING ETC-SENSOR	DVM-SYSTEM,STS304,ID2.5,OD4.5,L44,T0.3,W2,NONE	2	SA
15-6	DB91-00933A	SCREW-MACHINE	SWRCH18A,ZPC(WHT),L12,M3,PH,+,WS,2	3	SA
15-7	DB92-04837D	ASSY MODULE	INVERTER,QMD RAC AR9500T,142x222mm,Y,220V-240V,	1	SA
15-8	DB93-09497F	ASSY CONNECTOR WIRE-COMP	3,1015,16,RED,MG625040/WHT,DBT061-03P/WHT,-,100,	1	SA
15-9	DB93-12121B	ASSY CONNECTOR WIRE-EARTH WIRE	1,1015,18,YEL/GRN,173724-1,ST710197-2,-,240,-,-,-,-,PB	2	SA
15-11	DB93-16371A	ASSY CONNECTOR WIRE-POWER	2,1015,16,BRN,175022-1,MG630591R/WHT,-,500,-,-,TR36	1	SA
15-12	DB93-16402A	ASSY CONNECTOR WIRE-COMM	2,1007,22,RED,YH396-02VR/RED,175020-1,-,250,PVC/BLK	1	SA
15-15	DB93-17175C	ASSY CONNECTOR WIRE-REACTOR	2,1015,16,WHT,MG630591R/WHT,MG633976K/WHT,-,25	1	SA
15-16	DB93-17177A	ASSY CONNECTOR WIRE-AC SIGNAL	2,1015,18,SKY,YH396-03VR/WHT,YH396-H03PL/WHT,-,1	1	SA
15-17	DB95-05164A	ASSY THERMISTOR OUT	AC,200,10,±3,25,7PI	1	SA
16	DB93-17353A	ASSY CONNECTOR WIRE-COMP	3,3343,16,YEL,MG610876/WHT,MG634833/WHT,-,250,CE	1	SA
17	DB31-00642C	MOTOR BLDC FAN	RD-310-45-8B,310V,40W	1	SA
18	DB60-00437A	FASTENER-NUT FLANGE	QMD,SWRCH10A,L6	1	SA
19	DB67-01407A	FAN PROPELLER	AR12NVFPCWKXAZ,PP+(GF+PD)40%,AR12NVFPCWKXAZ	1	SA
20	DB61-04339E	BRACKET VALVE	N-WW / N-SI,SGMCC,T1,W94,anti-corrosion	1	SA
21	DB96-24878B	ASSY TUBE 4WAY	N-SI,RIH-6	1	SA
21-1	DB62-06847A	VALVE 4WAY	BRASS,2HP,COMMON	1	SA
21-2	DB62-09654A	VALVE SERVICE-SPINDLE	BRASS,FLARE,k type,R410A,9.52mm	1	SA
21-3	DB67-60031A	SPRING-RUBBER	QMD,STS304,1.4mm,OD34.8,T1.4,RUST_RESISTING_PR	3	SA
21-4	DB67-70011A	WEIGHT-RUBBER	NR,W22,BLACK,BLACK	2	SA
21-5	DB95-04804B	ASSY-SOLENOID	MALDIVES,CONNECT PBA	1	SA
21-5-1	DB95-01635A	VALVE COIL SOLENOID	AC220-240V,1000,L-Wire	1	SC
22	DB96-24887A	ASSY TUBE EEV	N-SI,F&T 4-4-2,1.4C,H/P	1	SA
22-1	DB62-08126C	VALVE COIL EXPAN	DC12V,COIL,700mm,MOLDING,T-type	1	SA
22-2	DB62-09652A	VALVE SERVICE-SPINDLE	A/C,BRASS,FLARE,R410A,6.35mm	1	SA
23-1	DB67-01533A	RUBBER-LEG	All frame,NR,BLACK	4	SA
23-2	DB67-20011A	DRAIN-PLUG OUT	ASH-1814ER,PP,NATURAL	1	SA
24	6002-000481	SCREW-TAPPING	TH,+,NO,2S,M4.0,L12,NI PLT,SWRCH18A,ZnNi + TOP Co	27	SA
25	DB63-02341A	FELT-COMP SIDE	-,FELT/PVC,T5+T1.6,-,-,-,-	1	SA
26	DB63-02460G	CLOTH COMP-OUT	QMD RAC(2150/3150, velcro less,FELT/PVC,T5+T1.6	1	SA