AR12CSFCMWKNCV Indoor Exploded Views and Parts List

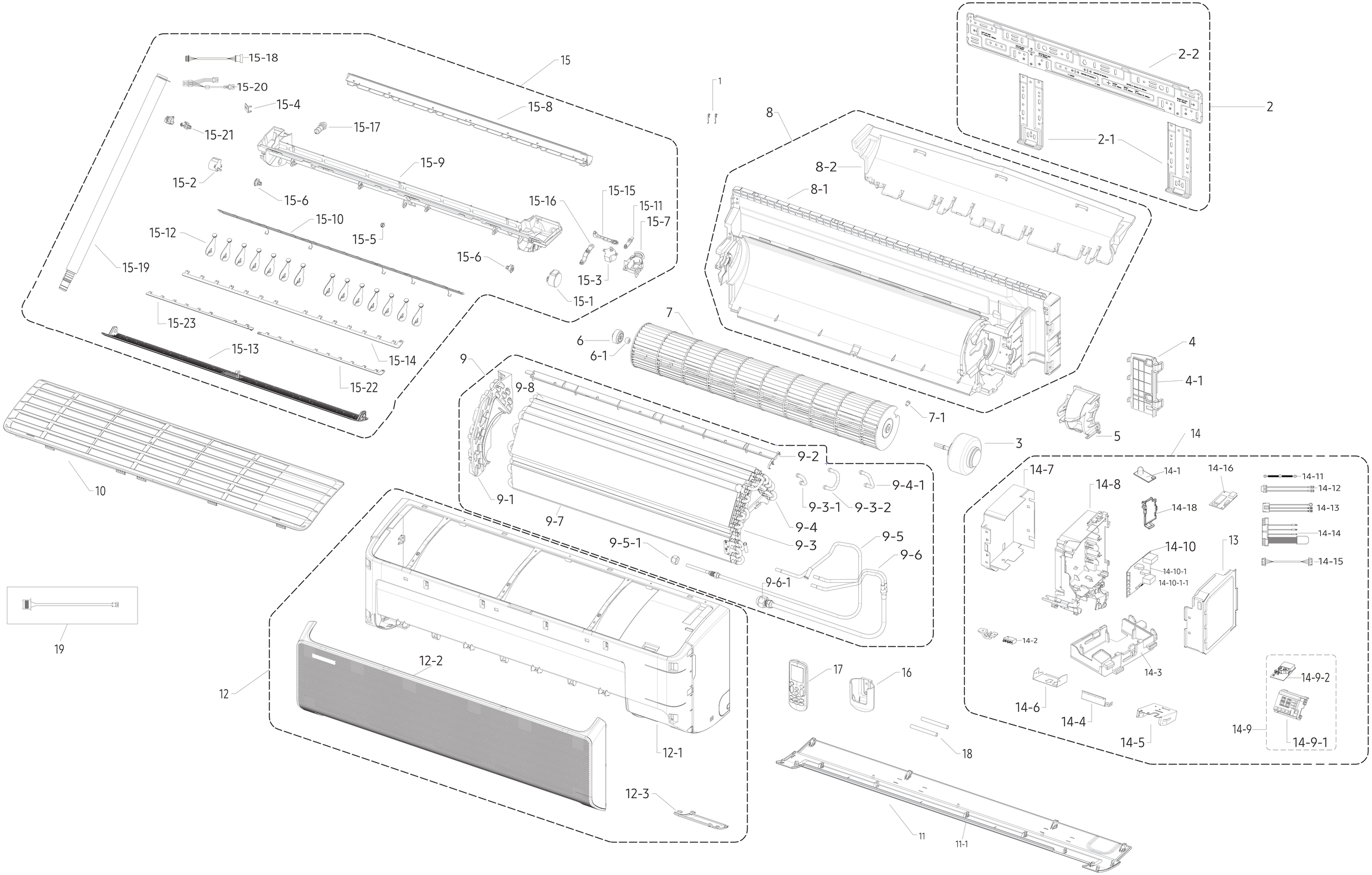

Wiring Diagram

14-9 DISPLAY PBA

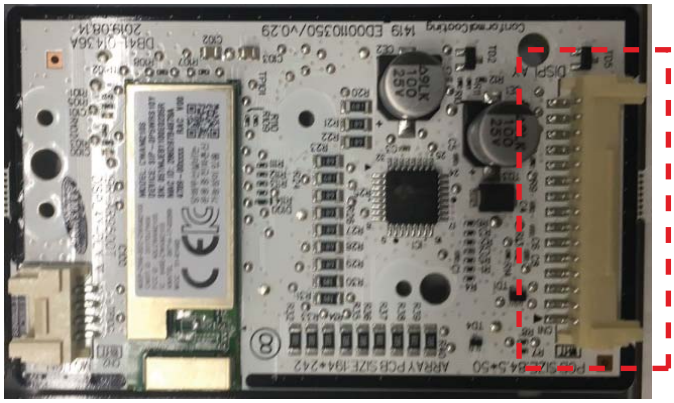

Material Code	Connecting Point 1	
	PCB	Connector No
DB92-05040N	DISPLAY	CN01

14-10 MAIN PBA

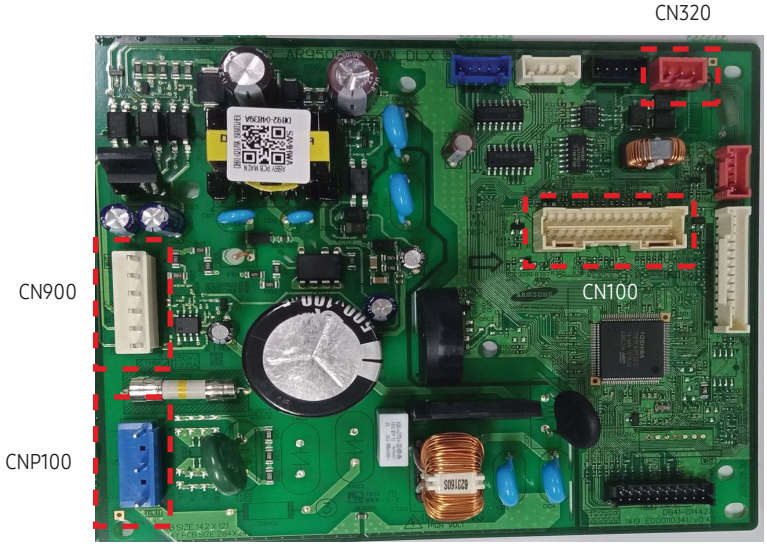

Material Code	No.	Connecting Point 1	
		PCB	Connector No
DB93-17178A	14-15	MAIN	CN900
DB93-17169A	14-13	MAIN	CNP100
DB93-17055B	14-12	MAIN	CN320
DB32-00272A	14-14	MAIN	CN100

Circuit Diagram

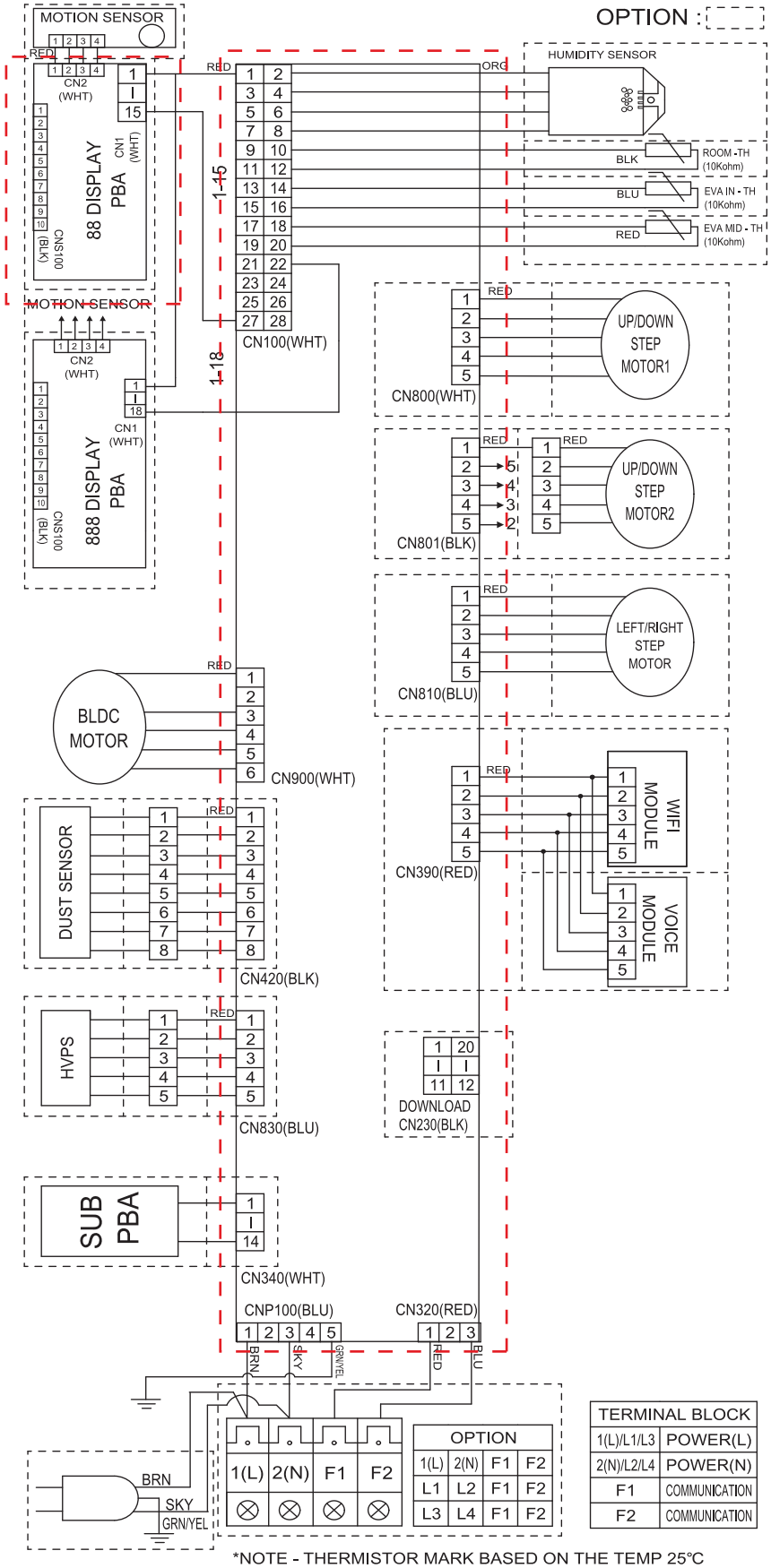

*NOTE - THERMISTOR MARK BASED ON THE TEMP 25°C

PBA 명	Partlist No.
DISPLAY PBA	14-9
MAIN PBA	14-10

■ Parts List

AR12CSFCMWKNCV

No.	Parts Code	Parts Description	Spec.	Quantity	SA/SNA
1	DB67-60030A	SPRING-SENSOR	WW2-PJT,STS301,0.4mm,T0.4,NONE,W2.7	2	SA
2	DB90-11453B	ASSY HANGER	AR9500T,QMD RAC 1, 2	1	SA
3	DB31-00694A	MOTOR BLDC FAN	FMH2031SSA,1230rpm,310V,0.163A,27W	1	SA
4	DB90-11563B	ASSY HOLDER-PIPE	AR9500T,Recycle PP	1	SA
4-1	DB61-07413B	HOLDER-PIPE	RAC QMD,PP,T2,D,BLACK,-,-,P-001S	1	SA
5	DB63-04215B	COVER MOTOR	PP+TD30%,T1.8,HB,BLACK,-,SSPP-T30	1	SA
6	DB94-00455B	ASSY-RUBBER BEARING	AR18MC5UDMCNNA,ASSY	1	SC
6-1	DB94-40007B	ASSY BEARING	G1-PJT,SSEC	1	SC
7	DB94-02933B	ASSY FAN CROSS	QMD RAC1,PI106.5 , L596mm	1	SA
8	DB94-07968B	ASSY BACK BODY	AR9500T,QMD RAC 1, CV	1	SA
9	DB96-24831N	ASSY EVAP-MODULE	S1-5, AUS/NA/NORDIC,2R14(16)S, L591, HYDROPHILE	1	SA
9-5-1	DB60-30010A	FASTENER-NUT FLARE	-,BRASS,-,-,-,1/4"	1	SA
9-7	DB96-24830J	ASSY EVAP-MAIN	S1-5, MAIN,2R9(10)S, L591, HYDROPHILE	1	SA
9-8	DB96-24833D	ASSY EVAP-SUB	S1-5, SUB,2R5(6)S, L591, HYDROPHILE	1	SA
10	DB63-04207B	FILTER AIR-PRE MODULE	AR9500T, QMD RAC1,HIPS,DA WHITE,WHITE, Non-Zeomic	1	SA
11	DB90-11929Q	ASSY COVER-PANEL	QMD RAC1, WIND FREE ,DB68-08890A,CV	1	SA
11-1	DB63-04228A	COVER PANEL	AR9500T, QMD RAC1, WIND-FREE,HIPS,T2.5,-,DA WHITE,-,XC	1	SA
12	DB92-04820J	ASSY PANEL FRONT	AIRISE,DIT+Bixby,QMD RAC1, WIND FREE	1	SA
12-1	DB64-03460A	PANEL FRONT	AR9500T, QMD RAC1, WIND-FREE,HIPS,XQ83180,DA WHITE,-	1	SA
12-2	DB64-03474A	GRILLE INLET	AR9500T, QMD RAC1, WIND-FREE,,HIPS,T3,DA WHITE,XQ831	1	SA
12-3	DB93-17180B	ASSY DISPLAY	AR9500T,No hole, DIT+Smart things	1	SA
13	DB61-07430A	PLATE CONTROL-RIGHT	AR9500T,GI-SGCC,T0.3	1	SA
14	DB92-05191G	ASSY PBA KIT-IN MODULE	INDOOR,QMD RAC AR9500T,DLX,WF,EMI,TP1X,CV,FJM,Stan	1	SA
14-2	DB37-00033B	TERMINAL BLOCK	4P,MELAMINE,300V,25A,47X36.4X22mm,D4,NO,L1, L2, F1, F	1	SA
14-8	DB61-07432A	CASE CONTROL-IN	AR9500T,ABS,L260,BLACK,VE-0858	1	SA
14-9	DB92-05040N	ASSY PCB DISPLAY	DISPLAY_DLX_TP1X,QMD RAC AR9500T,50x84.5mm,88,WIFI,	1	SA
14-9-1	DB61-07412A	CASE-LED	AR9500T, QMD RAC,HIPS,T1.8,L69,BLACK,-,HIPS 3315,8.8	1	SA
14-9-2	DB94-09340A	ASSY PCB SMD	DISPLAY_DLX_TP1X,QMD RAC AR9500T,50x84.5mm,88,WIFI,	1	SA
14-10	DB92-05043J	ASSY PCB MAIN-IN	MAIN-IN,QMD RAC AR9500T,141.5x120mm,220V-240V,5V,1	1	SA
14-10-1	DB94-09338A	ASSY PCB AUTO-IN	MAIN-IN,QMD RAC AR9500T,141.5x120mm,220V-240V,5V,1	1	SA
14-10-1-1	DB94-09339A	ASSY PCB SMD-IN	MAIN-IN,QMD RAC AR9500T,141.5x120mm,220V-240V,5V,1	1	SA
14-11	DB93-14245D	ASSY CONNECTOR WIRE-EARTH	1,1015,16,YEL/GRN,ST710095-3,ST710095-3,-,380,-,-,-,-,EVA-	1	SA
14-12	DB93-17055B	ASSY CONNECTOR WIRE-COMM	2,1007,22,RED,SMH250-03L/RED,179973-1,-,270,PVC TUBE,20	1	SA
14-13	DB93-17169A	ASSY CONNECTOR WIRE-POWER	3,1015,18,BRN,YH396-05VR/BLU,175022-1,ST710095-3,150,-,	1	SA
14-14	DB32-00272A	SENSOR HUMIDITY	5V,10-90%RH,AC,DLX,5%,400mm,28P	1	SA
14-15	DB93-17178A	ASSY CONNECTOR WIRE-DC SIGNAL	14,2095,26,RED,SMH200-H14H3/WHT,SMH200-H14H3/WHT,-	1	SA
15	DB94-07995B	ASSY TRAY DRAIN-MODULE	DA WHITE,QMD RAC 1,HP,WIND FREE	1	SA
15-1	DB31-00371C	MOTOR STEP	-,DC12V,650gf.cm,E CLASS,5.625deg,1/64	1	SA
15-2	DB31-00371A	MOTOR STEP	-,DC12V,650gf.cm,E CLASS,1W,5.625deg,1/64	1	SC
15-3	DB31-00695A	MOTOR STEP 2P	STEP MOTOR,DC 12V,650gf.cm,E CLASS,1W,5.625deg,1/64	1	SA
15-4	DB61-06989A	HOLDER WIRE	F11-RAC,HIPS,-,W16.5,L17,BLACK,-,-,HIPS 3315,MOTOR	1	SA
15-5	DB61-07418A	HINGE BLADE-A	AR9500,POM,T0.7,NATURAL,W10.1,LW301,-,-	1	SA
15-6	DB61-07419A	HINGE BLADE-B	AR9500,POM,T0.7,NATURAL,W16.1,LW301,-,-	2	SA
15-7	DB61-07440A	CASE MOTOR	QMD RAC,HIPS,T2,L53.2,BLACK,-,HIPS 3315,CASE STEP MOTC	1	SA
15-10	DB63-04248A	GUARD-SCREEN	AR9500T,MSWR,T1,BLACK,QMD1,L592.9	1	SA
15-11	DB66-01727A	LINK BLADE-C	A3050, F-RAC-04,POM,NATURAL,-,LW301	1	SA
15-12	DB66-02038A	BLADE V	AR9500,PP,T1.6,BLACK,QMD RAC_NO WIND(AUTO)	12	SA
15-13	DB66-02044A	BLADE H	AR9500,ABS,T3.3,DA WHITE,-,SR-0320K,QMD RAC1_No WIN	1	SA
15-14	DB66-02045A	LINK BLADE-A	AR9500,POM,L513.1,T2.5,BLACK,QMD RAC1	1	SA
15-15	DB66-02048A	LINK BLADE-B	AR9500,POM,L63.9,T2.2,BLACK,QMD RAC3	1	SA
15-16	DB66-02049A	LINK BLADE-D	AR9500,POM,L59.1,T2.2,BLACK,-,LW301,QMD RAC	1	SA
15-17	DB73-00180A	RUBBER-CAP DRAIN	SS-PJT,EPDM,T3,-,PM GRAY,-,L 40,-	1	SA
15-18	DB93-17189A	ASSY CONNECTOR WIRE	5,2095,26,RED,SMH200-H05H3/BLK,25045HP-05A/WHT,950,-	1	SA
15-19	DB94-02195B	ASSY DRAIN-HOSE	ALL,HOSE DRAIN L550mm	1	SA
16	DB61-06087B	HOLDER-REMOCON	IDU,PP,T2,NEAT WHITE,P441JU,VE(Same as TSE W/M)	1	SA
17	DB96-25318V	ASSY WIRELESS REMOCON	23. RAC NORDIC,RS-3,ENGLISH,40.0*45.0,℃,RAC,Heat Pump	1	SA
19	DB93-17171A	ASSY CONNECTOR WIRE-DC SIGNAL	2,2095,26,RED,SMH200-H14PR/WHT,25045HP-02A/WHT,-,30	1	SA