AR12TSFYBWKXCV Outdoor Exploded Views and Parts List

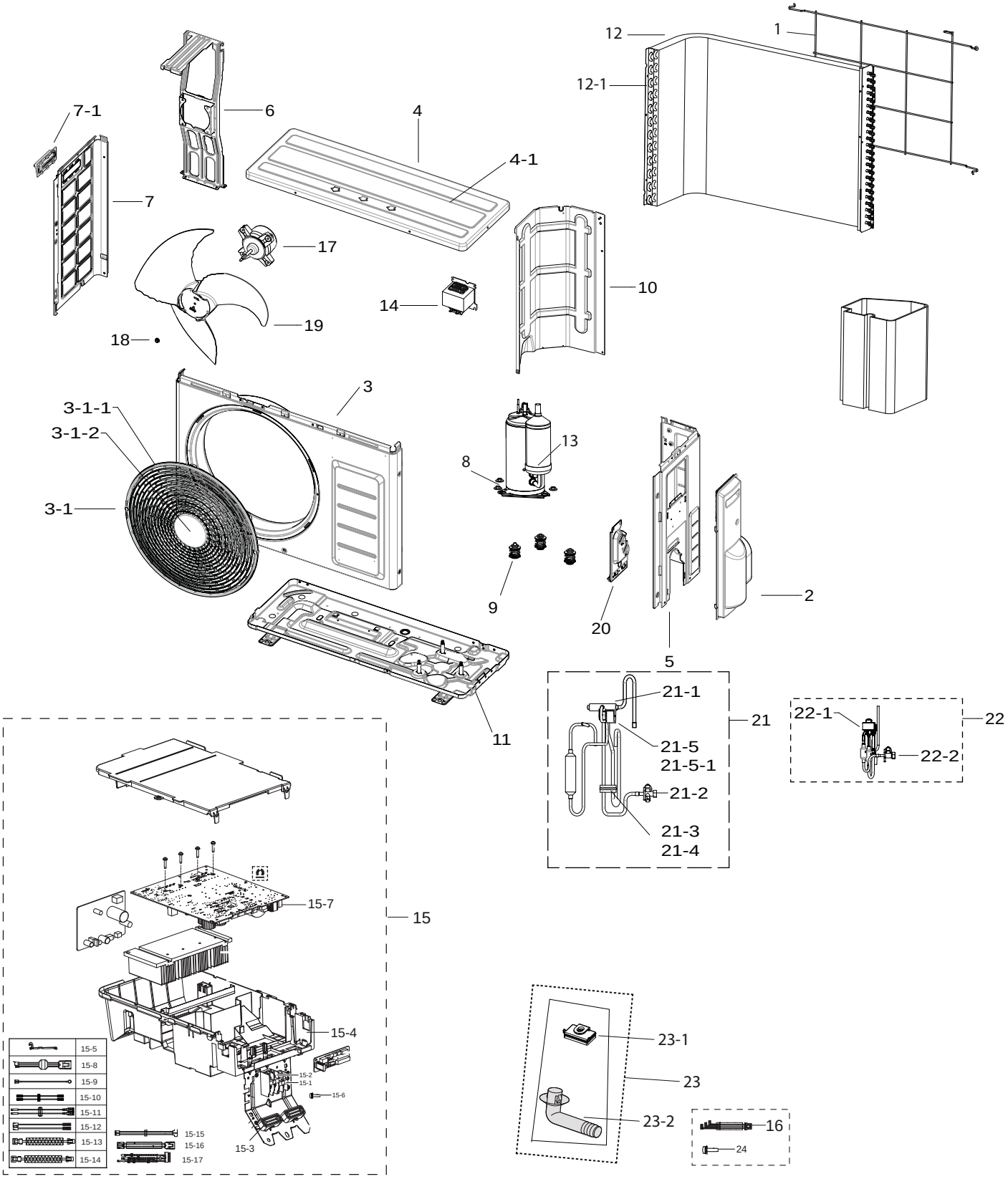

Tube Part Exploded view

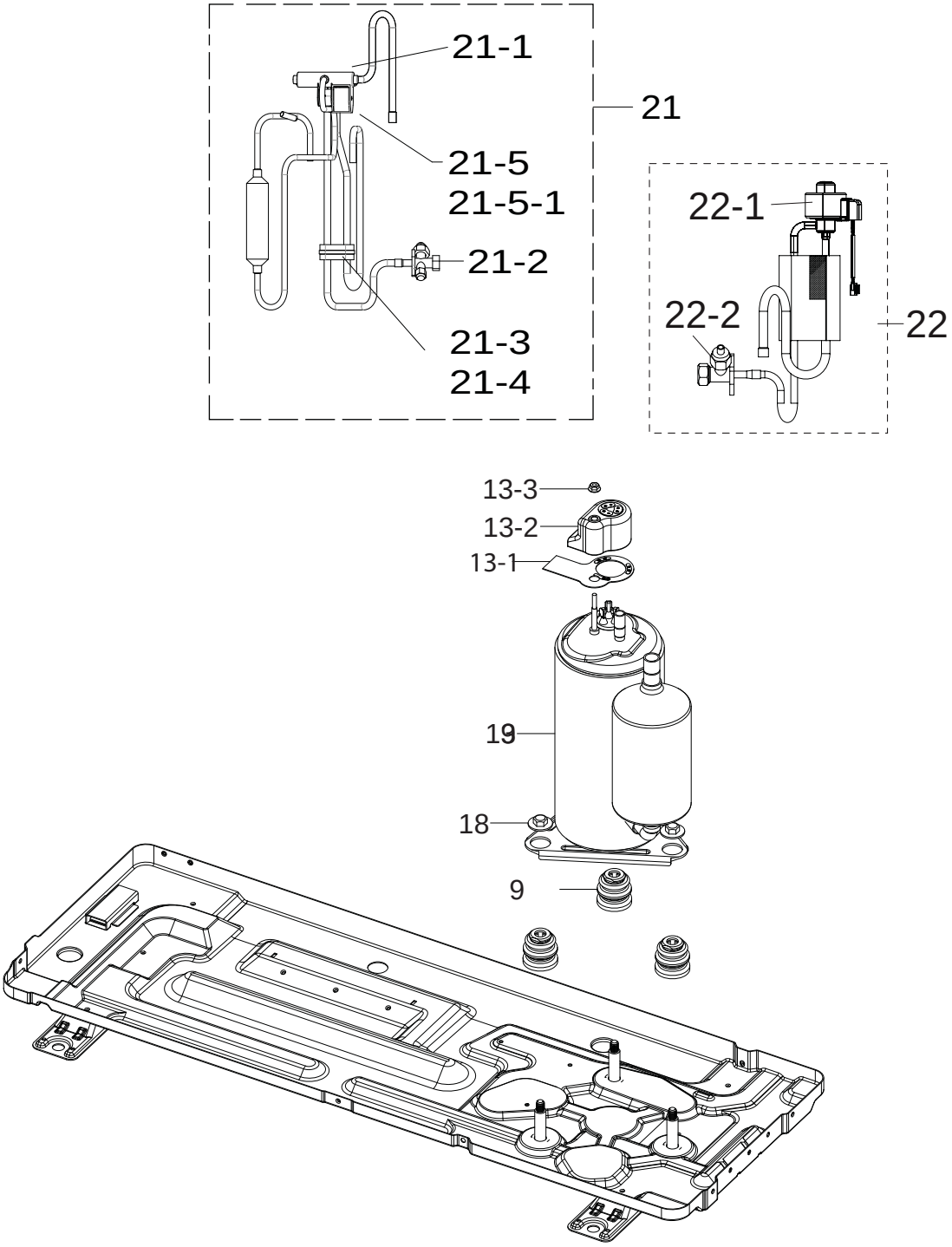

Control Part Exploded View

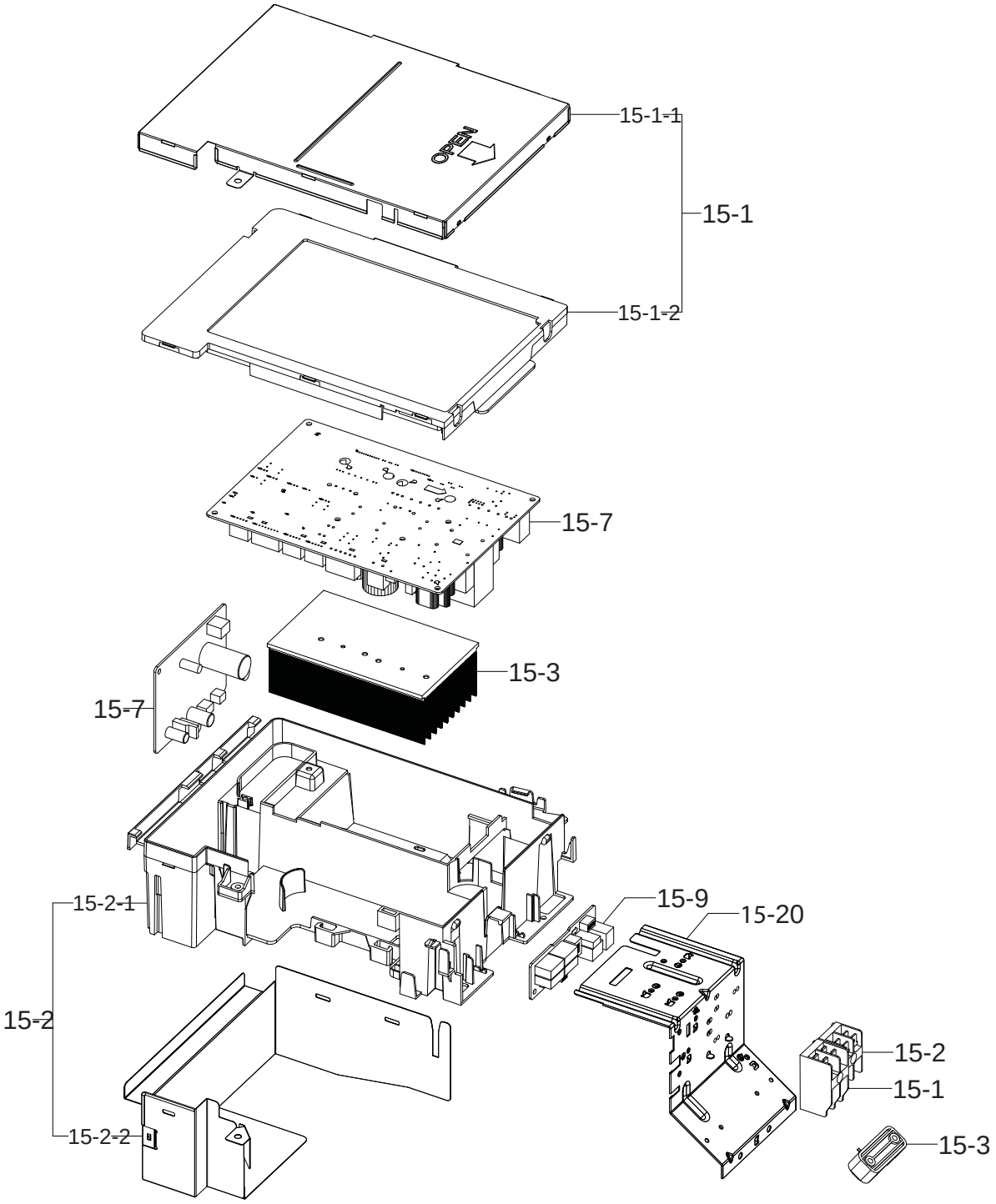

Wiring Diagram

9-8 MAIN PBA

Material Code	No.	Connecting Point 1	
		PCB	Connector No
DB93-12849A	9-27	MAIN	CN210
DB93-17177A	9-23	MAIN	CN031
DB93-17175B	9-21	MAIN	CNP051/052
DB93-16402A	9-16	MAIN	CN810

Circuit Diagram

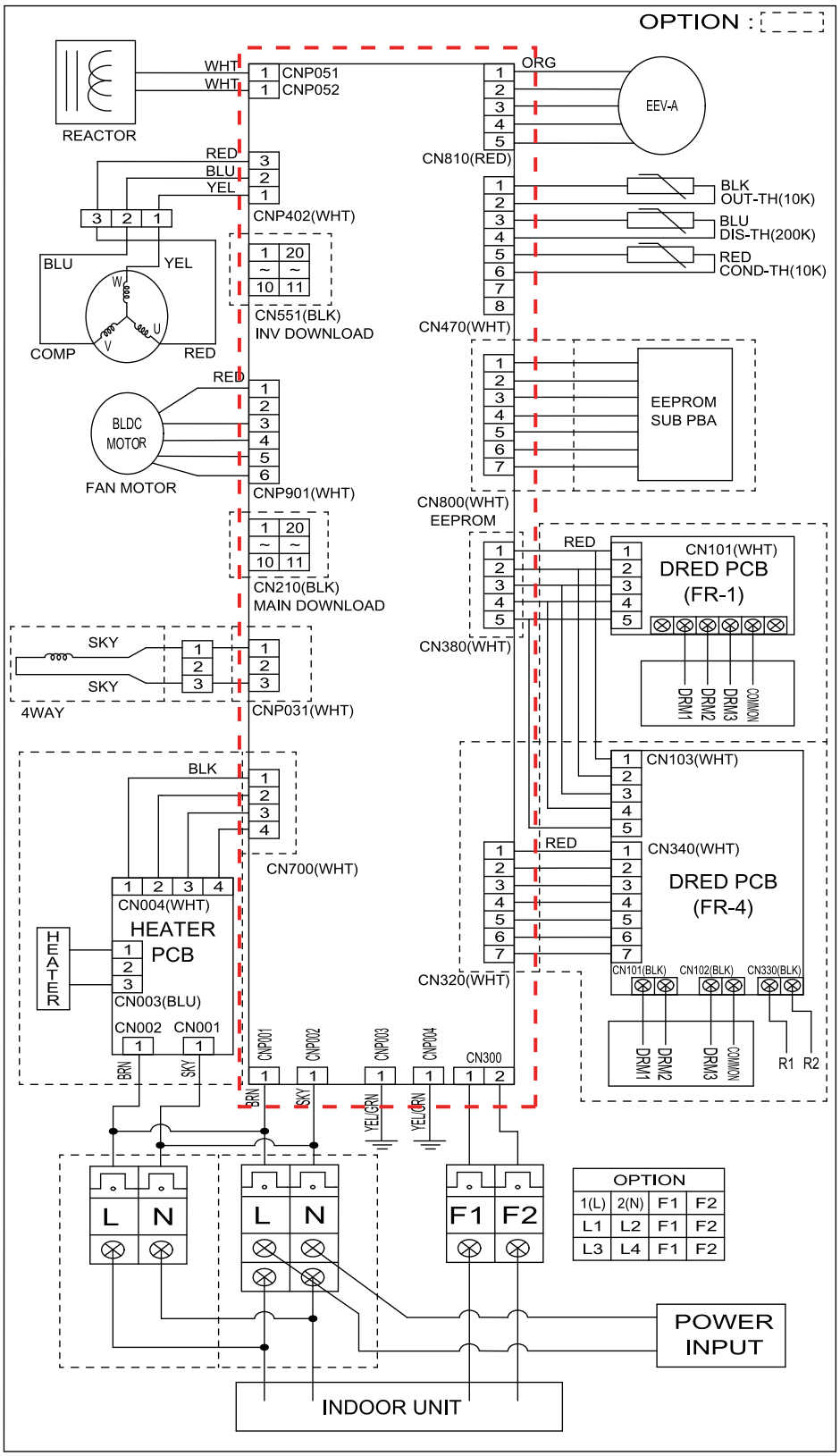

Partlist No.	9-8
PBA	MAIN PBA

■ Parts List

AR12TSFYBWKXCV

No.	Code No.	Description	Spec.	Q'ty	SA/SNA
1	DB63-03873A	GUARD COND	F-XS-03,MSWR,T3,EARTH BROWN	1	SA
2	DB90-06381F	ASSY COVER-VALVE	NEW_WW,GY0108	1	SA
3-1	DB90-08047B	ASSY GUARD-FAN	N-WW	1	SA
3-1-2	DB62-02912T	SEAL-GUARD FAN	EXPORT,LEX FOAM,WHITE,3,12,20,NON FLAM	6	SA
3-1-2	DB63-03660A	GUARD FAN	AR12NVFPCWKXAZ,PP,T1,EARTH BROWN	1	SA
4	DB90-07738A	ASSY CABI TOP	F-XS-03_SI CHASSIS,ASSY	1	SA
4-1	DB64-02983B	CABINET TOP	N_SI,GI-SGCC,T0.7,3 Front holes	1	SA
5	DB90-07739J	ASSY CABI SIDE-RH	SSEC,NEW SI,ASSY	1	SA
6	DB90-07834A	ASSY BRACKET MOTOR	F-XS-03(NEW SI),SSEC	1	SA
7	DB90-08039A	ASSY CABI SIDE-LEFT	N-SI,A3050,F-XS-03,GI-SGCC	1	SA
7-1	DB64-00992C	HANDLE-LF	AR12NSPXBWKXAZ,PP,T2,W113,L48,MT42S,GY	1	SA
8~13	DB90-11501G	ASSY BASE OUT-COND	N-SI,7W-2R, PF2_20S ,KTN130D42UFR, COLD /	1	SA
8	DB60-30028A	NUT-FLANGE	HWH,M8,ZPC(WHT),SWRCH18A,P1.25/Washer	3	SA
9	DB63-03386A	GROMMET ISOLATOR	NR,L33,ID11.5,OD34	3	SA
10	DB67-01402A	PARTITION	F-XS-03,GI-SGCC,T0.6	1	SA
11	DB90-07728A	ASSY BASE OUT	AR12FSSSBWKXSA,SSEC	1	SA
12	DB96-23270A	ASSY COND BENDING	N_SI	1	SA
12-1	DB61-05340A	PLATE-COND LF	AQV12EWH,GI-SGCC,T0.7,SSEC	1	SA
13	DB95-05762A	ASSY COMP	KTN130D42UFR,R32	1	SA
14	DB27-00041B	COIL HARMONIC	5mH,94.5*94*55,10A,Screw	1	SA
15	DB92-04842N	ASSY KIT	OUTDOOR,QMD RAC AR9500T,PF2_20S,N-SI,E	1	SA
15-1	DB65-00274A	TERMINAL BLOCK	TERMINAL BLOCK,Polycarbonate, Phenol,AC300	1	SA
15-2	DB37-00036B	TERMINAL BLOCK	2P(4SCREW),MELAMINE,600V,30A,30X47X26m	1	SA
15-3	DB61-00250A	HOLDER-WIRE CLAMP	AF25M9970DBX,PA,-,-,-,-,BLACK,-,-,V-0,FR50,-,	2	SA
15-4	DB61-06722A	CASE CONTROL-OUT	ABS,T2,VICTORY GRAY,ABS2030	1	SA
15-5	DB81-00635A	SPRING ETC-SENSOR	DVM-SYSTEM,STS304,R2.5,R4.5,44,0.3,2.0,NO	2	SA
15-6	DB91-00933A	ASSY-SCREW MACHINE	MH*, FJM,M3, L12	3	SA
15-7	DB92-04837D	ASSY MODULE	INVERTER,QMD RAC AR9500T,142x194mm,Y,2	1	SA
15-8	DB93-09497B	ASSY CONNECTOR WIRE	3,1015,16,RED,MG625040/WHT,DBT061-03P/W	1	SA
15-9	DB93-12121B	ASSY CONNECTOR WIRE-EARTH WIRE	1,1015,18,YEL/GRN,173724-1,ST710197-2,-,24	1	SA
15-11	DB93-16371A	ASSY CONNECTOR WIRE-POWER	2,1015,16,BRN,175022-1,MG630591R/WHT,-,5	1	SA
15-12	DB93-16402A	ASSY CONNECTOR WIRE-COMM	2,1007,22,RED,YH396-02V/RED,175020-1,-,250	1	SA
15-14	DB93-17173A	ASSY CONNECTOR WIRE-DC SIGNAL	7,2095,26,RED,SMH200-H07H3/WHT,SMH200-H	1	SA
15-15	DB93-17175A	ASSY CONNECTOR WIRE-REACTOR	2,1015,16,WHT,MG630591R/WHT,MG633976K	1	SA
15-16	DB93-17177A	ASSY CONNECTOR WIRE-AC SIGNAL	2,1015,18,SKY,YH396-03VR/WHT,YH396-H03P	1	SA
15-17	DB95-05164A	ASSY THERMISTOR OUT	103AT,AC,200,10	1	SA
16	DB93-12849A	ASSY CONNECTOR WIRE	3,3343,16,YEL,MG610876/WHT,MG634833/WH	1	SA
17	DB31-00642C	MOTOR BLDC FAN	RD-310-45-8B,310V,40W	1	SA
18	DB60-00437A	FASTENER-NUT FLANGE	SWRCH10A,14,1.2,6	1	SA
19	DB67-01407A	FAN PROPELLER	AR12NVFPCWKXAZ,PP+GF20%+PD20%,AR12N	1	SA
20	DB61-04339C	BRACKET-VALVE	N-WW, N-SI,GL-SAZCC,T1,W94,Superdyma	1	SA
21	DB96-24878A	ASSY TUBE 4WAY	N-SI,20-RIH-6,20-RIH-74-R32,ATN110/KTN130,	1	SA
21-1	DB62-06847A	VALVE 4WAY	BRASS,2HP,COMMON	1	SA
21-2	DB62-09654A	VALVE SERVICE-SPINDLE	FLARE,R410A,9.52	1	SA
21-3	DB67-60031A	SPRING-RUBBER	QMD,STS304,1.4mm,OD34.8,T1.4,RUST_RESI	3	SA
21-4	DB67-70011A	WEIGHT-RUBBER	NR,BLACK	2	SA
21-5	DB95-04804B	ASSY-SOLENOID	MALDIVES,CONNECT PBA	1	SA
21-5-1	DB95-01635A	VALVE COIL SOLENOID	AC220-240V,1000,L-Wire	1	SC
22	DB96-24887A	ASSY TUBE EEV	N-SI,F&T 4-4-2,1.4C,H/P	1	SA
22-1	DB62-08126C	VALVE COIL EXPAN	DC12V,COIL,700mm,MOLDING,T-type	1	SA
22-2	DB62-09652A	VALVE SERVICE-SPINDLE	FLARE,R410A,6.35	1	SA
23-1	DB67-01533A	RUBBER-LEG	All frame,NR,BLACK	4	SA
23-2	DB67-20011A	DRAIN-PLUG OUT	ASH-1814ER,PP,-,-,-,-,NATURAL,-,-,-	1	SA
24	6002-000481	SCREW-TAPPING	TH,+,NO,2S,M4.0,L12,NI PLT,SWRCH18A,ZnNi	25	SA