# AR18BSFCMWKNCV Indoor Exploded Views and Parts List

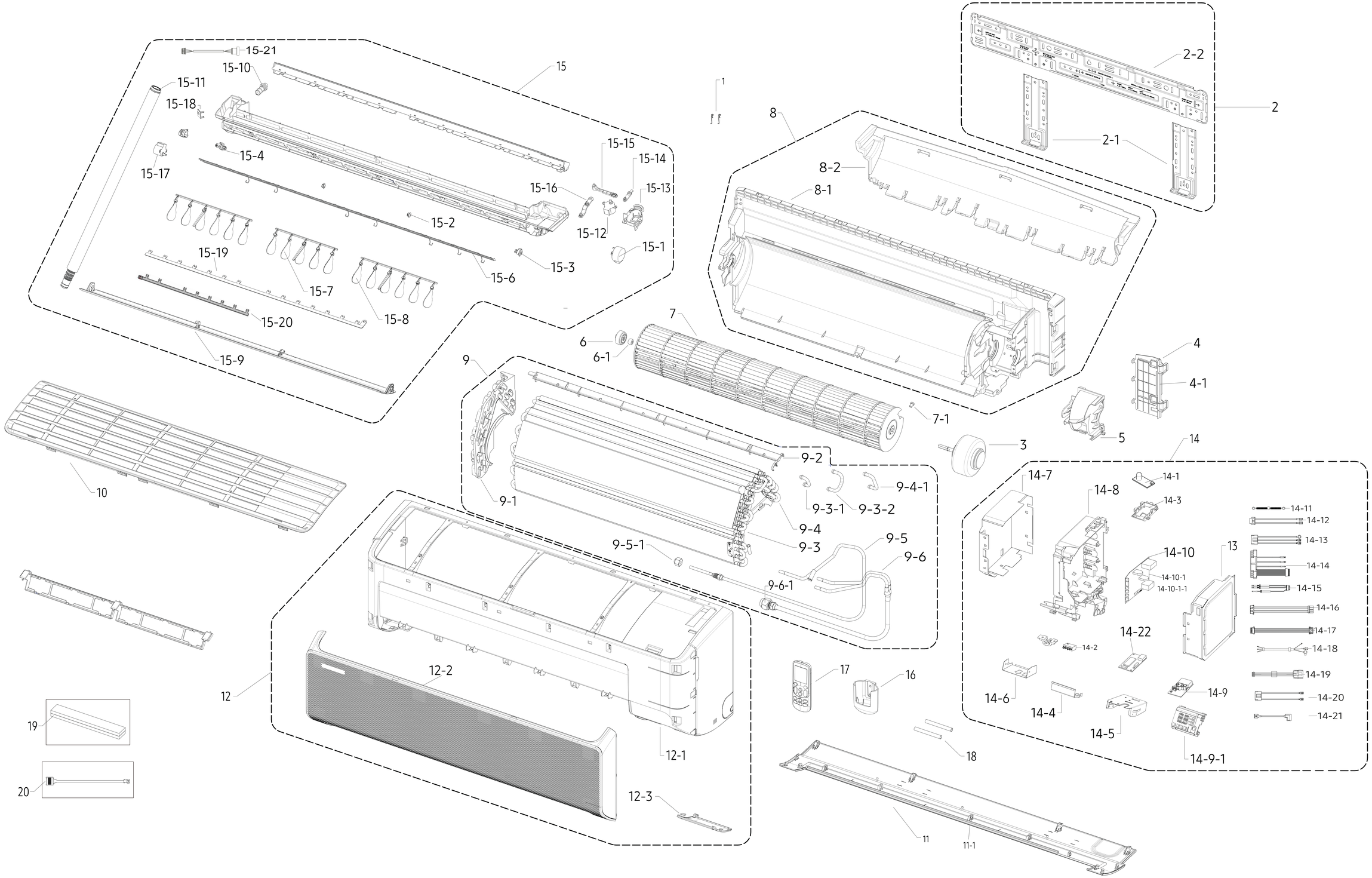

# Wiring Diagram

## 14-9 DISPLAY PBA

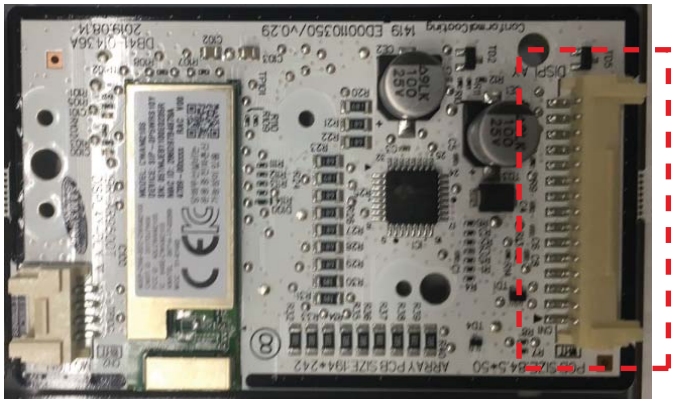

| Material Code | Connecting Point 1 | |
|---|---|---|
| | PCB | Connector No |
| DB92-04833B | DISPLAY | CN01 |

## 14-10 MAIN PBA

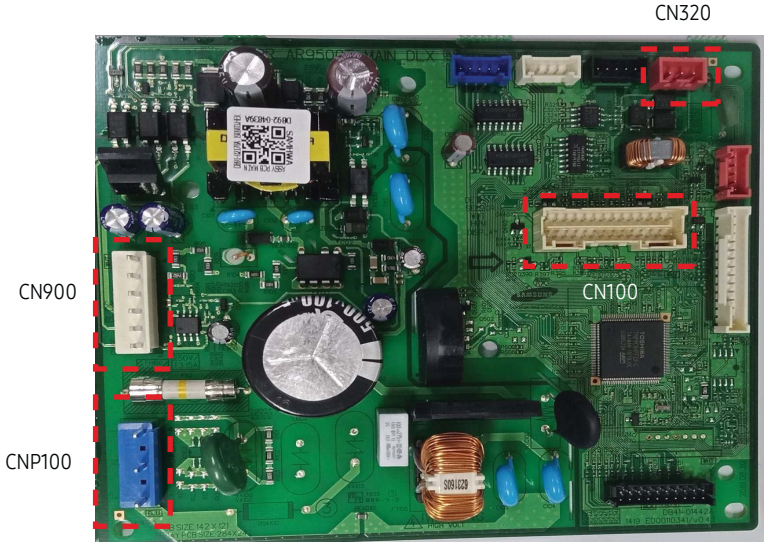


| Material Code | No. | Connecting Point 1 | |
|---|---|---|---|
| | | PCB | Connector No |
| DB93-17178A | 14-17 | MAIN | CN900 |
| DB93-17169A | 14-13 | MAIN | CNP100 |
| DB93-17055B | 14-12 | MAIN | CN320 |
| DB32-00272A | 14-14 | MAIN | CN100 |

# Circuit Diagram

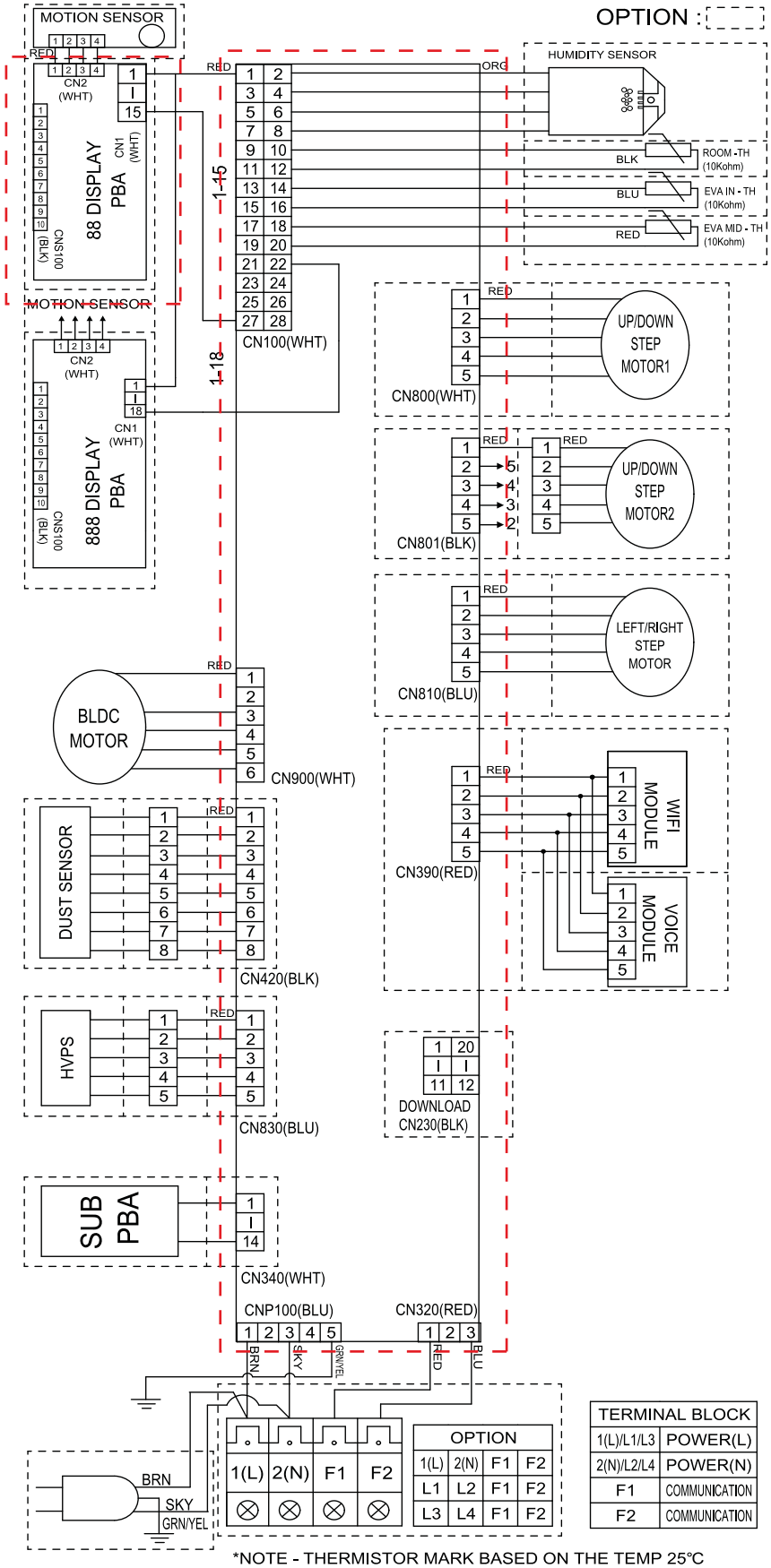


| PBA 명 | Partlist No. |
|---|---|
| DISPLAY PBA | 14-9 |
| MAIN PBA | 14-10 |

## ■ Parts List

**AR18BSFCMWKNCV**

| No. | Parts Code | Parts Description | Spec. | Quantity | SA/SNA |
|---|---|---|---|---|---|
| 1 | DB67-60030A | SPRING-SENSOR | WW2-PJT,STS301,0.4mm,T0.4,NONE,W2.7 | 2 | SA |
| 2 | DB90-11454A | ASSY HANGER | AR9500T,QMD RAC 3 | 1 | SA |
| 3 | DB31-00636A | MOTOR BLDC FAN | RD-310-25-8A(AL),1500,310V,1,27W | 1 | SA |
| 4 | DB90-11563A | ASSY HOLDER-PIPE | QMD RAC 3,HOLDER PIPE + FOAM PU | 1 | SA |
| 4-1 | DB61-07413A | HOLDER-PIPE | AR9500,PP+TD30%,T2,NATURAL,-,-,PTN960 | 1 | SA |
| 5 | DB63-04215A | COVER MOTOR | AR9500,PP+TD30%,NATURAL,PTN960 | 1 | SA |
| 6 | DB94-00455B | ASSY-RUBBER BEARING | AR18MC5UDMCNNA,ASSY | 1 | SC |
| 6-1 | DB94-40007B | ASSY BEARING | G1-PJT,SSEC | 1 | SC |
| 7 | DB94-03085A | ASSY FAN CROSS | HAWAII PJT,PI106.5xL830.5 | 1 | SA |
| 8 | DB94-07970B | ASSY BACK BODY | AR9500T,QMD RAC 3, CV | 1 | SA |
| 9 | DB96-24849A | ASSY EVAP-MODULE | S3-3,L825.5, 4BY4, EU | 1 | SA |
| 9-5-1 | DB60-30010A | FASTENER-NUT FLARE | -,BRASS,-,-,-,-,-,-,-,- | 1 | SA |
| 9-6-1 | DB60-30010C | FASTENER-NUT FLARE | -,BRASS,-,-,-,-,-,-,-,- | 1 | SA |
| 10 | DB63-04209B | FILTER AIR-PRE MODULE | AR9500T, QMD RAC3,HIPS,DA WHITE,WHITE, Non-Zeor | 1 | SA |
| 11 | DB90-11934K | ASSY COVER-PANEL | QMD RAC3, WIND-FREE,DB68-08890A | 1 | SA |
| 11-1 | DB63-04227A | COVER PANEL | AR9500T, QMD RAC3, WIND-FREE,HIPS,T2.5,DA WHITE | 1 | SA |
| 12 | DB92-04824J | ASSY PANEL FRONT | AIRISE,DIT+Bixby,QMD RAC3, WIND FREE | 1 | SA |
| 12-1 | DB64-03461A | PANEL FRONT | AR9500T, QMD RAC3, WIND-FREE,HIPS,XQ83180,DA WH | 1 | SA |
| 12-2 | DB64-03473A | GRILLE INLET | AR9500T, QMD RAC3, WIND-FREE,,HIPS,T3,DA WHITE, | 1 | SA |
| 12-3 | DB93-17180B | ASSY DISPLAY | AR9500T,No hole, DIT+Smart things | 1 | SA |
| 13 | DB61-07430A | PLATE CONTROL-RIGHT | AR9500T,GI-SGCC,T0.3 | 1 | SA |
| 14-2 | DB37-00033B | TERMINAL BLOCK | 4P,MELAMINE,300V,25A,47X36.4X22mm,D4,NO,L1, L2, F | 1 | SA |
| 14-8 | DB61-07432A | CASE CONTROL-IN | AR9500T,ABS,L260,BLACK,VE-0858 | 1 | SA |
| 14-9 | DB92-04833B | ASSY PCB DISPLAY | DISPLAY_DLX,QMD RAC AR9500T,84.5x50mm,-,-,-,WIFI | 1 | SA |
| 14-9-1 | DB61-07412A | CASE-LED | AR9500T, QMD RAC,HIPS,T1.8,L69,BLACK,XQ83180,8.8 | 1 | SA |
| 14-10 | DB92-04839A | ASSY PCB MAIN | MAIN,QMD RAC AR9500T,142x121mm,220V-240V,5V,12 | 1 | SA |
| 14-11 | DB93-14245D | ASSY CONNECTOR WIRE-EARTH | 1,1015,16,YEL/GRN,ST710095-3,ST710095-3,-,380,-,-,-,- | 1 | SA |
| 14-12 | DB93-17055B | ASSY CONNECTOR WIRE-COMM | 2,1007,22,RED,SMH250-03L/RED,179973-1,-,270,PVC TU | 1 | SA |
| 14-13 | DB93-17169A | ASSY CONNECTOR WIRE-POWER | 3,1015,18,BRN,YH396-05VR/BLU,175022-1,ST710095-3,1 | 1 | SA |
| 14-14 | DB32-00272A | SENSOR HUMIDITY | 5V,10-90%RH,AC,DLX,5%,400mm,28P | 1 | SA |
| 14-17 | DB93-17178A | ASSY CONNECTOR WIRE-DC SIGNAL | 14,2095,26,RED,SMH200-H14H3/WHT,SMH200-H14H3/W | 1 | SA |
| 14-22 | 4709-002815 | W-LAN MODULE | CWAM210S,RAC,IEEE802.11,2.4GHz,ARTIK 051,5V, 12V, | 1 | SA |
| 15 | DB94-07997A | ASSY TRAY DRAIN-MODULE | DA WHITE,QMD RAC 3,WIND FREE | 1 | SA |
| 15-1 | DB31-00370B | MOTOR STEP | -,DC12V,800gf.cm,E CLASS,1W,7.5deg,1/85 | 1 | SA |
| 15-2 | DB61-07418A | HINGE BLADE-A | AR9500,POM,T0.7,NATURAL,W10.1,F20-03,- | 2 | SA |
| 15-3 | DB61-07419A | HINGE BLADE-B | AR9500,POM,T0.7,NATURAL,W16.1,F20-03,- | 2 | SA |
| 15-6 | DB63-04249A | GUARD-SCREEN | AR9500T,MSWR,T1,BLACK,QMD3,L827.4 | 1 | SA |
| 15-8 | DB66-02038A | BLADE V | AR9500,PP,T1.6,BLACK,QMD RAC_NO WIND(AUTO) | 17 | SA |
| 15-9 | DB66-02042A | BLADE H | AR9500,ABS,T3.3,DA WHITE,QMD RAC3_No WIND | 1 | SA |
| 15-10 | DB73-00180A | RUBBER-CAP DRAIN | SS-PJT,EPDM,T3,PM GRAY,L 40 | 1 | SA |
| 15-11 | DB94-02195B | ASSY DRAIN-HOSE | ALL,HOSE DRAIN L550mm | 1 | SA |
| 15-12 | DB31-00695A | MOTOR STEP 2P | STEP MOTOR,DC 12V,650gf.cm,E CLASS,1W,5.625deg,1, | 1 | SA |
| 15-13 | DB61-07440A | CASE MOTOR | QMD RAC,HIPS,T2,L53.2,BLACK,XQ83180,CASE STEP MC | 1 | SA |
| 15-14 | DB66-01727A | LINK BLADE-C | A3050, F-RAC-04,POM,NATURAL | 1 | SA |
| 15-15 | DB66-02048A | LINK BLADE-B | AR9500,POM,L63.9,T2.2,BLACK,QMD RAC3 | 1 | SA |
| 15-16 | DB66-02049A | LINK BLADE-D | AR9500,POM,L66.8,T2.2,BLACK,QMD RAC | 1 | SA |
| 15-17 | DB31-00371A | MOTOR STEP | -,DC12V,650gf.cm,E CLASS,1W,5.625deg,1/64 | 1 | SC |
| 15-18 | DB61-06989A | HOLDER WIRE | F11-RAC,HIPS,W16.5,L17,BLACK,HI650,MOTOR | 1 | SA |
| 15-19 | DB66-02034A | LINK BLADE-A | AR9500,POM,L408.1,T2.5,BLACK,QMD RAC3 | 1 | SA |
| 15-20 | DB66-02047A | LINK BLADE-A | AR9500,POM,L352.7,T2.5,BLACK,QMD RAC3 | 1 | SA |
| 15-21 | DB93-17189C | ASSY CONNECTOR WIRE | 5,2095,26,RED,SMH200-H05H3/BLK,25045HP-05A/WHT,- | 1 | SA |
| 16 | DB61-06087B | HOLDER-REMOCON | IDU,PP,T2,NEAT WHITE,P441JU,VE(Same as TSE W/M) | 1 | SA |
| 17 | DB96-24901B | ASSY WIRELESS REMOCON | ARH-5203,20. QMD RAC WINDFREE NORDIC,RS-3,ENGLI | 1 | SA |
| 20 | DB93-17171A | ASSY CONNECTOR WIRE-DC SIGNAL | 2,2095,26,RED,SMH250-14L/WHT,25045HP-02A/WHT,-,2 | 1 | SA |