infrasave

EL/ELD Series

Electric Indoor/Outdoor Overhead Patio Heaters

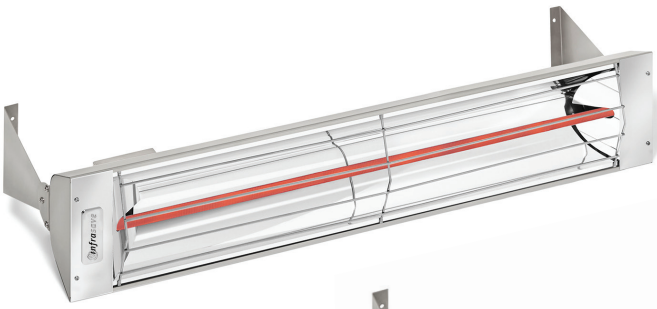

EL Series Single Element Heaters

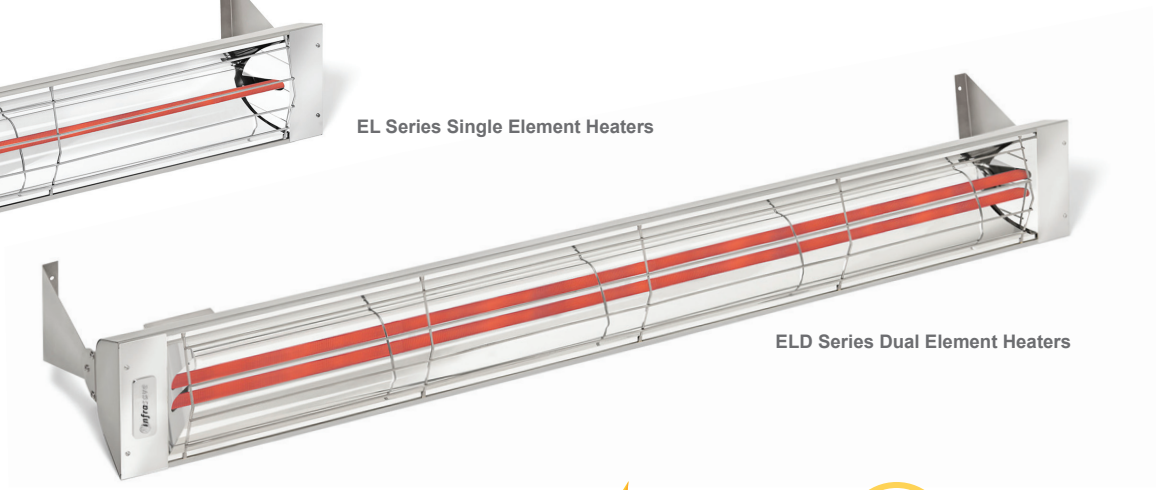

ELD Series Dual Element Heaters

Heating Models and Capacities

With smaller, sleeker profiles, **EL/ELD Series** heating systems offer a streamlined, yet effective heating solution for any indoor or outdoor space. They are available in a range of sizes, wattages and voltages that can provide appropriate warmth to any indoor or outdoor area, from a small room to an expansive open-air commercial space.

Multiple Voltages

Multiple Colors

Flush Mount

One Bulb, or Two

Features

- Models range from 500 to 6000 Watts
- Available in 120V, 208V, 240V, 277V, and 480V options for a wide range of applications.
- Flush Mount option to make heater blend in with any structure
- Single stage or 2 stage option for a high or low heat setting
- Stainless steel finish – custom colors available in black, white, beige, and mineral bronze

Perfect for:

RESTAURANTS NIGHTCLUBS HOTELS

1-877-446-3727 | csr@infrasave.com | www.infrasave.com

EL/ELD Series – Technical Specifications & Benefits

Information below is intended only as a reference and should not be used when installing equipment. Please ensure you locate the most recent instruction manual for accurate and up to date information.

Clearances to Combustibles

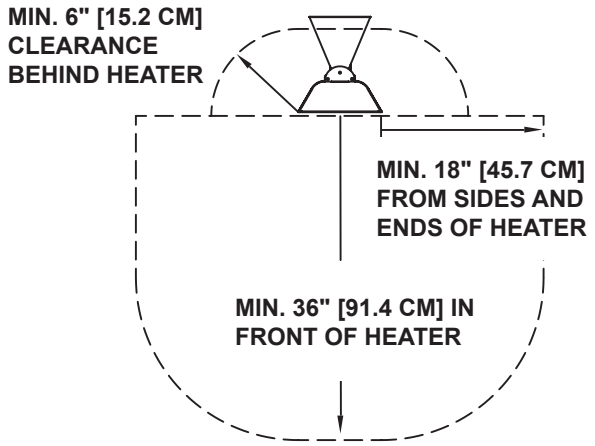

Dimensions

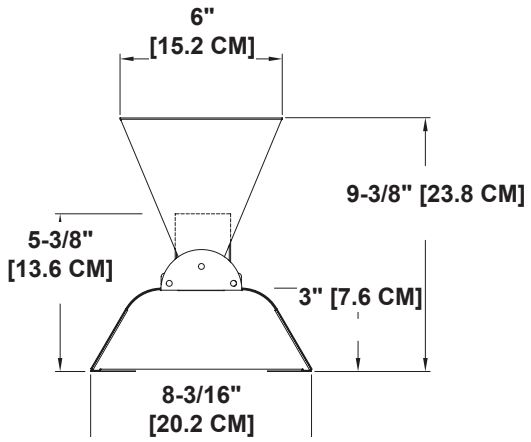

Specifications

MODEL	WATTS	LENGTH	VOLTS/AMPS				PHASE	SHIP WGT.
EL-519	500	19.5"	120/4.2				Single	10
EL-719	750	19.5"	120/6.3				Single	10
EL-1033	1000	33"	120/8.3				Single	12
EL-1533	1500	33"	120/12.5	208/7	240/6.3		Single	12
EL-2039	2000	39"	208/10	240/8.3	277/7	480/4	Single	13
EL-2539	2500	39"	208/12	240/10.4	277/9	480/5	Single	13
ELD-3033	3000	33"	208/14	240/12.5	277/11	480/6	Single	13
EL-3061	3000	61.25"	208/14	240/12.5	277/11	480/6	Single	20
ELD-4039	4000	39"	208/19	240/16.7	277/14	480/8.3	Single	14
EL-4061	4000	61.25"	208/19	240/16.7	277/14	480/8.3	Single	20
ELD-5039	5000	39"	208/24	240/20.8	277/18	480/10.4	Single	14
ELD-6061	6000	61.25"	208/28.8	240/25	277/21.7	480/12.5	Single	21

Heater Controls

On/Off Control

- Designed for use with single bulb heaters
- Available in flush mount or surface mount options
- Available with no cover, weatherproof cover, or weatherproof box
- Range 120/277 VAC [20 amps max per switch]

Variable Control

- Designed for use with single bulb heaters up to 3000 watts [maximum 15 amps]
- Variable control to regulate heat output
- Each heater must have its own input regulator
- Available in flush mount or surface mount options
- Available with no cover, weatherproof cover, or weatherproof box
- Available for 240 V and 120V heaters only

2-Stage Control

- Designed for use with dual bulb heaters
- 2-stage option for high or low heat setting
- Range 120/277 VAC [20 amps max per switch]
- Available in flush mount or surface mount options
- Available with no cover, weatherproof cover, or weatherproof box

Distributor info:

Our customers include:

THE KEG STEAKHOUSE + BAR · milestones GRILL + BAR · earls KITCHEN & BAR · Boston Pizza · BUFFALO WILD WINGS · HOOTERS · JACK ASTOR'S · STONE BREWING CO.

USA: 2 Schwank Way, Waynesboro, GA 30830 I **Canada:** 5285 Bradco Blvd. Mississauga, ON L4W 2A6
Tel: 1-877-446-3727 I Fax: 1-866-361-0523 I www.infrasave.com I csr@infrasave.com

reduced CO_2 · HARDI PROUD MEMBER · c UL us

M052016 RL: v1.4 RD: Mar-2019