Tranquility® Compact (TC) Series

Submittal Data

Models TCH/V006 - 060 60Hz - HFC-410A

LC405

Rev.: March 8, 2018

CLIMATEMASTER®
Water-Source Heat Pump Systems

ClimateMaster works continually to improve its products. As a result, the design and specifications of each product at the time of order may be changed without notice and may not be as described herein. Please contact ClimateMaster's Customer Service Department at 1-405-745-6000 for specific information on the current design and specifications. Statements and other information contained herein are not express warranties and do not form the basis of any bargain between the parties, but are merely ClimateMaster's opinion or commendation of its products. The latest version of this document is available at **climatemaster.com**.

TC Compact Packaged Series

Unit Features	4
Selection Procedure	5
TC Series Nomenclature	7
Performance Data – AHRI/ASHRAE/ISO 13256-1	8
Performance Data – Selection Notes	9
Performance Data – TC H/V 006 (PSC Blower)	10
Performance Data – TC H/V 009 (PSC Blower)	11
Performance Data – TC H/V 012 (PSC Blower)	12
Performance Data – TC H/V 015 (PSC Blower)	13
Performance Data – TC H/V 015 (ECM Blower)	14
Performance Data – TC H/V 018 (PSC Blower)	15
Performance Data – TC H/V 018 (ECM Blower)	16
Performance Data – TC H/V 024 (PSC Blower)	17
Performance Data – TC H/V 024 (ECM Blower)	18
Performance Data – TC H/V 030 (PSC Blower)	19
Performance Data – TC H/V 030 (ECM Blower)	20
Performance Data – TC H/V 036 (PSC Blower)	21
Performance Data – TC H/V 036 (ECM Blower)	22
Performance Data – TC H/V 041 (PSC Blower)	23
Performance Data – TC H/V 042 (PSC Blower)	24
Performance Data – TC H/V 042 (ECM Blower)	25
Performance Data – TC H/V 048 (PSC Blower)	26
Performance Data – TC H/V 048 (ECM Blower)	27
Performance Data – TC H/V 060 (PSC Blower)	28
Performance Data – TC H/V 060 (ECM Blower)	29
Air Flow Correction Table	30
Antifreeze Correction Table	31
Blower Performance Data – Standard Unit – PSC	32
Blower Performance Data – High Static – PSC	33
Blower Performance Data (ECM Data)	34
Waterside Ecomomizer Data	35
Waterside Ecomomizer Correction Tables	38
ECM Control	39
Physical Data	42

*Document page number is shown next to part number (e.g. LC405 - 3 = page 3). Since not all pages are typically used in the submittals process, the page number in the lower right corner can still be used (page ____of_____).

ClimateMaster works continually to improve its products. As a result, the design and specifications of each product at the time of order may be changed without notice and may not be as described herein. Please contact ClimateMaster's Customer Service Department at 1-405-745-6000 for specific information on the current design and specifications. Statements and other information contained herein are not express warranties and do not form the basis of any bargain between the parties, but are merely ClimateMaster's opinion or commendation of its products. The latest version of this document is available at **climatemaster.com**.

TC Compact Packaged Series

TC - Horizontal – Dimensional Data	43
TCH - with Waterside Economizer - Dimensional Data	45
TC - Horizontal Service Access	47
TCV - with Waterside Economizer - Dimensional Data	48
TC - Vertical Upflow – Dimensional Data	50
TC - Vertical Service Access	52
Corner Weights for TCH Series Units	53
Electrical Data – Standard Unit	54
Electrical Data – High Static Blower	55
Electrical Data – ECM	56
TC Series Wiring Diagram Matrix	57
Typical Wiring Diagram – Single Phase TC Units with CXM Controller	59
Typical Wiring Diagram – Single Phase TC Units with CXM Controller, ECM Blower	60
Typical Wiring Diagram – Three Phase 208/230V TC Units with CXM Controller	61
Typical Wiring Diagram – Three Phase 208/230V TC Units with DXM Controller	62
Typical Wiring Diagram – Three Phase 460/575V TC Units with CXM Controller	63
Typical Wiring Diagram – Three Phase 460/575V TC Units with DXM Controller	64
Typical Wiring Diagram – 460/575V TC Units with CXM And LON Controller	65
Typical Wiring Diagram – 460/575V TC Units with DXM & LON Controller	66
Typical Wiring Diagram – 460/575V TC Units with CXM & MPC Controller	67
Typical Wiring Diagram – 460/575V TC Units with DXM & MPC Controller	68
Engineering Specifications	69
Performance Sheet	78
Revision History	81

ClimateMaster works continually to improve its products. As a result, the design and specifications of each product at the time of order may be changed without notice and may not be as described herein. Please contact ClimateMaster's Customer Service Department at 1-405-745-6000 for specific information on the current design and specifications. Statements and other information contained herein are not express warranties and do not form the basis of any bargain between the parties, but are merely ClimateMaster's opinion or commendation of its products. The latest version of this document is available at **climatemaster.com**.

THE TRANQUILITY® 16 COMPACT (TC) SERIES

The award winning Tranquility® 16 Series raises the bar for water-source heat pump efficiencies, features and application flexibility. Not only does the Tranquility® 16 exceed ASHRAE 90.1 efficiencies, but it also uses EarthPure® HFC-410A zero ozone depletion refrigerant, making it an extremely environmentally-friendly option. Tranquility® 16 is eligible for LEED® (Leadership in Energy and Environmental Design) points because of the "green" technology design. With one of the smallest cabinets in the industry, the Tranquility® 16 will easily fit into tight spaces. Designed to be backward compatible with thousands of older water-source heat pumps, the Tranquility® 16 Compact Series heat pump is packed full of the innovation you have come to expect from the experts at ClimateMaster.

Available in sizes from 1/2 ton (1.76 kW) through 5 tons (17.6 kW) with multiple cabinet options (vertical upflow and horizontal) the Tranquility® 16 offers a wide range of units for most any application.

ClimateMaster's exclusive double isolation compressor mounting system makes the Tranquility® 16 one of the quietest units on the market. Compressors are mounted on specially engineered sound-tested EPDM grommets to a heavy gauge mounting plate, which is further isolated from the cabinet base with rubber grommets for maximized vibration/sound attenuation. The easy access control box and large access panels make installing and maintaining the unit easier than other water-source heat pumps currently in production, proving that a small unit can be easy to service.

Options such as tin-plated air coil, DDC controls, and high efficiency pleated MERV rated air filters allow customized design solutions. Optional high static fan motor expands the operating range and helps overcome some of the challenges associated with ductwork for retrofit installations. A cupro-nickel water-coil and sound absorbing UltraQuiet package are options that make a great unit even better. **Optional factory installed Waterside Economizer (WSE) uses cool loop water for "free" cooling. WSE option meets IECC section C403.3.1 and is a requirement in many states. WSE requires heat pump thermostat with two stages of cooling and one stage heating.**

The Tranquility® 16 (TC) Series Water-Source Heat Pumps are designed to meet the challenges of today's HVAC demands with one of the most innovative products available on the market.

UNIT FEATURES

- Sizes 006 (1/2 ton, 1.76 kW) through 060 (5 tons, 17.6 kW)
- EarthPure® HFC-410A refrigerant
- Exceeds ASHRAE 90.1 efficiencies
- Galvanized steel construction
- Epoxy powder painted galvanized steel drain pan
- Sound absorbing glass fiber insulation
- Unique double isolation compressor mounting via vibration isolating rubber grommets for quiet operation
- Insulated divider and separate compressor/air handler compartments
- Copeland scroll compressors (rotary for size 018 and below)
- TXV metering device
- Microprocessor controls standard (optional DXM and/or DDC controls)
- Field convertible discharge air arrangement for horizontal units
- PSC three-speed fan motor
- Internally trapped condensate drain line (vertical units only)
- Unit Performance Sentinel performance monitoring system
- Eight Safeties Standard
- Extended range (20 to 120°F, -6.7 to 48.9°C) capable

AVAILABLE OPTIONS

- High static blowers
- LonWorks, BACnet, Modbus and Johnson N2 compatibility options for DDC controls
- Cupro-nickel water-coil
- Sound absorbing UltraQuiet package
- ECM Blowers
- Waterside Economizer (WSE): Requires HP thermostat with 2 stages cooling
- Stainless steel condensate drain pan

ClimateMaster works continually to improve its products. As a result, the design and specifications of each product at the time of order may be changed without notice and may not be as described herein. Please contact ClimateMaster's Customer Service Department at 1-405-745-6000 for specific information on the current design and specifications. Statements and other information contained herein are not express warranties and do not form the basis of any bargain between the parties, but are merely ClimateMaster's opinion or commendation of its products. The latest version of this document is available at **climatemaster.com**.

Reference Calculations

Heating

$$LWT = EWT - \frac{HE}{GPM \times 500}$$

$$LAT = EAT + \frac{HC}{CFM \times 1.08}$$

Cooling

$$LWT = EWT + \frac{HR}{GPM \times 500}$$

$$LC = TC - SC$$

$$LAT\ (DB) = EAT\ (DB) - \frac{SC}{CFM \times 1.08}$$

$$S/T = \frac{SC}{TC}$$

Legend and Glossary of Abbreviations

BTUH = BTU(British Thermal Unit) per hour
CFM = airflow, cubic feet/minute
COP = coefficient of performance = BTUH output/BTUH input
DB = dry bulb temperature (°F)
EAT = entering air temperature, Fahrenheit (dry bulb/wet bulb)
EER = energy efficiency ratio = BTUH output/Watt input
MPT = male pipe thread
ESP = external static pressure (inches w.g.)
EWT = entering water temperature
GPM = water flow in U.S. gallons/minute
HE = total heat of extraction, BTUH
HC = air heating capacity, BTUH
HR = total heat of rejection, BTUH
HWC = hot water generator (desuperheater) capacity, Mbtuh
FPT = female pipe thread
KW = total power unit input, kilowatts
LAT = leaving air temperature, °F
LC = latent cooling capacity, BTUH
LWT = leaving water temperature, °F
MBTUH = 1000 BTU per hour
S/T = sensible to total cooling ratio
SC = sensible cooling capacity, BTUH
TC = total cooling capacity, BTUH
WB = wet bulb temperature (°F)
WPD = waterside pressure drop (psi & ft. of hd.)

Conversion Table - to convert inch-pound (English) to S-I (Metric)

Air Flow	Water Flow	Ext Static Pressure	Water Pressure Drop
Airflow (L/s) = CFM x 0.472	Water Flow (L/s) = gpm x 0.0631	ESP (Pa) = ESP (in of wg) x 249	PD (kPa) = PD (ft of hd) x 2.99

ClimateMaster works continually to improve its products. As a result, the design and specifications of each product at the time of order may be changed without notice and may not be as described herein. Please contact ClimateMaster's Customer Service Department at 1-405-745-6000 for specific information on the current design and specifications. Statements and other information contained herein are not express warranties and do not form the basis of any bargain between the parties, but are merely ClimateMaster's opinion or commendation of its products. The latest version of this document is available at **climatemaster.com**.

Step 1 Determine the actual heating and cooling loads at the desired dry bulb and wet bulb conditions.

Step 2 Obtain the following design parameters: Entering water temperature, water flow rate in GPM, air flow in CFM, water flow pressure drop and design wet and dry bulb temperatures. Air flow CFM should be between 300 and 450 CFM per ton. Unit water pressure drop should be kept as close as possible to each other to make water balancing easier. Go to the appropriate tables and find the proper indicated water flow and water temperature.

Step 3 Select a unit based on total and sensible cooling conditions. Select a unit which is closest to, but no larger than, the actual cooling load.

Step 4 Enter tables at the design water flow and water temperature. Read the total and sensible cooling capacities **(Note: interpolation is permissible, extrapolation is not).**

Step 5 Read the heating capacity. If it exceeds the design criteria it is acceptable. It is quite normal for Water-Source Heat Pumps to be selected on cooling capacity only since the heating output is usually greater than the cooling capacity.

Step 6 Determine the correction factors associated with the variable factors of dry bulb, wet bulb and air flow.Corrected Total Cooling = tabulated total cooling x wet bulb correction x air flow correction
Corrected Sensible Cooling = tabulated sensible cooling x dry bulb correction x air flow correction

Step 7 Compare the corrected capacities to the load requirements. Normally if the capacities are within 10% of the loads, the equipment is acceptable. It is better to undersize than oversize, as undersizing improves humidity control, reduces sound levels and extends the life of the equipment.

Step 8 When completed, calculate water temperature rise and assess the selection. If the units selected are not within 10% of the load calculations, then review what effect changing the GPM, water temperature and/or air flow and air temperature would have on the corrected capacities. If the desired capacity cannot be achieved, select the next larger or smaller unit and repeat the procedure. Remember, when in doubt, undersize slightly for best performance.

Example Equipment Selection For Cooling

Step 1 Load Determination:

Assume we have determined that the appropriate cooling load at the desired dry bulb 80°F and wet bulb 65°F conditions is as follows:

Total Cooling.....23,700 BTUH
Sensible Cooling.....16,500 BTUH
Entering Air Temp.....80°F Dry Bulb / 65°F Wet Bulb

Step 2 Design Conditions:

Similarly, we have also obtained the following design parameters:

Entering Water Temp.....90°F
Water Flow (Based upon 10°F rise in temp.).....6.0 GPM
Air Flow.....800 CFM

Step 3, 4 & 5 HP Selection:

After making our preliminary selection (TC024), we enter the tables at design water flow and water temperature and read Total Cooling, Sens. Cooling and Heat of Rej. capacities:

Total Cooling.....23,400 BTUH
Sensible Cooling.....17,500 BTUH
Heat of Rejection.....30,200 BTUH

Step 6 & 7 Entering Air and Airflow Corrections:

Next, we determine our correction factors.

	Table		Ent Air		Air Flow		Corrected
Corrected Total Cooling =	23,400	x	0.9681	x	1.0050	=	22,767
Corrected Sens Cooling =	17,500	x	1.1213	x	0.9820	=	19,270
Corrected Heat of Rej. =	30,200	x	0.9747	x	1.0434	=	30,713

Step 8 Water Temperature Rise Calculation & Assessment:

Actual Temperature Rise.....10.2°F

When we compare the Corrected Total Cooling and Corrected Sensible Cooling figures with our load requirements stated in Step 1, we discover that our selection is within +/- 10% of our sensible load requirement. Furthermore, we see that our Corrected Total Cooling figure is within 1,000 Btuh the actual indicated load.

ClimateMaster works continually to improve its products. As a result, the design and specifications of each product at the time of order may be changed without notice and may not be as described herein. Please contact ClimateMaster's Customer Service Department at 1-405-745-6000 for specific information on the current design and specifications. Statements and other information contained herein are not express warranties and do not form the basis of any bargain between the parties, but are merely ClimateMaster's opinion or commendation of its products. The latest version of this document is available at **climatemaster.com**.

TC Series Nomenclature

1 2	3	4 5 6	7	8	9	10	11	12	13	14	15
TC	H	036	A	G	C	3	0	A	L	B	S

MODEL TYPE
TC = TRANQUILITY COMPACT R410A

CONFIGURATION
H = HORIZONTAL
V = VERTICAL

UNIT SIZE
006 - E,G
009 - E,G
012 - E,G,
015 - E,G
018 - E,G
024 - E,F,G,H
030 - E,FG,H
036 - E,FG,H
041 - F,G,H,N (TCV ONLY)
042 - F,G,H,N
048 - F,G,H,N
060 - F,G,H,N

REVISION LEVEL
A= CURRENT REVISION FOR ALL SIZES

VOLTAGE
G = 208/230/60/1
E = 265/60/1
H = 208/230/60/3
F = 460/60/3
N = 575/60/3

CONTROLS
C = CXM
D = DXM
L = CXM w/LON
M = DXM w/LON
N = CXM w/MPC
P = DXM w/MPC

CABINET INSULATION

OPTION	RANGE	ULTRA QUIET	1" FILTER RAIL	2" FILTER RAIL	1" FILTER FRAME	2" FILTER FRAME
1	EXTENDED RANGE	NO	YES	NO		
A			NO			YES
J			NO	YES	NO	
K			NO		YES	NO
2		YES	YES	NO		
C			NO			YES
L			NO	YES	NO	
M			NO		YES	NO
3	STANDARD RANGE	NO	YES	NO		
E			NO			YES
N			NO	YES	NO	
P			NO		YES	NO
4		YES	YES	NO		
G			NO			YES
R			NO	YES	NO	
S			NO		YES	NO

FUTURE USE
0 = NONE

HEAT EXCHANGER OPTIONS

OPTION	COPPER WATER COIL	CUPRO-NICKEL WATER COIL	TIN PLATED AIR COIL	E-COATED ECON COIL	WATER SIDE ECONOMIZER
A	YES	NO	YES	N/A	NO
C			NO	N/A	
J	NO	YES	YES	N/A	
N			NO	N/A	
1	YES	NO	YES	YES	YES
2			NO	NO	
3	NO	YES	YES	YES	
4			NO	NO	

RETURN AIR OPTIONS
L = LEFT RETURN
R = RIGHT RETURN
F = FRONT RETURN and VERTICAL 009 - 030 AND 041 ONLY
V = LEFT RETURN S.S. DRAIN PAN
W = RIGHT RETURN S.S. DRAIN PAN
Z = FRONT RETURN S.S. DRAIN PAN and VERTICAL 009-030 AND 041 ONLY

SUPPLY AIR OPTIONS

Option	Supply	Configuration	Motor
T	Top	TCV	PSC
B	Back	TCH	PSC
S	Straight	TCH	PSC
*V	Top	TCV	PSC Hi Static
*Y	Back	TCH	PSC Hi Static
*Z	Straight	TCH	PSC Hi Static
*K	Top	TCV	ECM
*P	Back	TCH	ECM
*W	Straight	TCH	ECM

* N/A for sizes 006, 009, 012, 041

S = STANDARD

Note: Above model nomenclature is a general reference. Not all configurations are available on all models. Consult engineering submittal for detailed information.

ClimateMaster works continually to improve its products. As a result, the design and specifications of each product at the time of order may be changed without notice and may not be as described herein. Please contact ClimateMaster's Customer Service Department at 1-405-745-6000 for specific information on the current design and specifications. Statements and other information contained herein are not express warranties and do not form the basis of any bargain between the parties, but are merely ClimateMaster's opinion or commendation of its products. The latest version of this document is available at **climatemaster.com**.

ASHRAE/AHRI/ISO 13256-1. English (I-P) Units

Model	Fan Motor	Water Loop Heat Pump				Ground Water Heat Pump				Ground Loop Heat Pump			
		Cooling 86°F		Heating 68°F		Cooling 59°F		Heating 50°F		Cooling 77°F		Heating 32°F	
		Capacity Btuh	EER Btuh/W	Capacity Btuh	COP	Capacity Btuh	EER Btuh/W	Capacity Btuh	COP	Capacity Btuh	EER Btuh/W	Capacity Btuh	COP
TC-006	PSC	5,800	13.2	7,500	4.7	6,900	21.1	6,200	4.0	6,200	15.4	4,900	3.4
TC-009	PSC	8,800	13.4	11,600	4.3	10,100	21.0	9,800	3.9	9,300	15.7	7,900	3.4
TC-012	PSC	11,700	13.5	15,200	4.3	13,700	20.8	12,500	3.8	12,000	14.9	9,900	3.2
TC-015	PSC	14,500	15.4	17,300	5.0	16,800	24.5	14,400	4.4	15,000	17.2	11,100	3.6
	ECM	14,500	15.5	16,800	5.1	16,800	25.0	13,800	4.4	15,000	17.9	10,900	3.6
TC-018	PSC	17,300	14.3	21,500	5.0	20,600	21.6	17,200	4.2	18,400	16.3	13,900	3.4
	ECM	19,600	15.9	22,000	5.3	22,300	23.6	18,200	4.4	20,200	18.1	14,100	3.8
TC-024	PSC	23,700	13.4	28,500	4.7	26,700	20.9	24,000	4.1	24,900	15.4	18,500	3.3
	ECM	23,800	14.3	27,700	4.9	26,700	21.5	23,400	4.1	24,900	16.4	18,500	3.5
TC-030	PSC	28,100	13.4	35,100	4.6	31,700	20.1	29,600	4.1	28,900	15.1	23,400	3.4
	ECM	28,300	14.3	35,800	4.8	32,400	22.0	30,000	4.4	29,300	16.5	23,600	3.7
TC-036	PSC	34,500	13.5	45,200	4.4	38,700	20.7	37,500	4.0	35,300	14.9	29,600	3.3
	ECM	34,500	14.0	43,400	4.5	39,000	20.9	35,800	4.0	35,400	15.5	28,700	3.4
TCV-041	PSC	36,500	13.2	45,700	4.3	41,400	19.7	38,000	3.7	38,000	14.8	30,000	3.2
TC-042	PSC	40,100	13.2	52,700	4.3	45,900	19.6	44,000	3.8	40,500	14.4	34,300	3.2
	ECM	42,100	14.9	50,400	4.5	46,400	22.0	42,400	4.0	42,200	16.8	33,900	3.4
TC-048	PSC	47,700	13.3	55,900	4.7	54,300	20.5	46,500	4.1	49,000	14.7	36,400	3.4
	ECM	47,900	14.2	53,000	4.8	53,600	21.0	45,600	4.3	49,000	16.2	36,400	3.6
TC-060	PSC	59,400	13.4	72,000	4.3	66,600	19.9	60,000	3.9	60,100	14.8	47,500	3.3
	ECM	60,000	14.8	71,200	4.4	67,000	21.0	59,600	4.0	61,400	16.5	47,500	3.4

Cooling capacities based upon 80.6°F DB, 66.2°F WB entering air temperature
Heating capacities based upon 68°F DB, 59°F WB entering air temperature
All ratings based upon operation at lower voltage of dual voltage rated models

ASHRAE/AHRI/ISO 13256-1. Metric (S-I) Units

Model	Fan Motor	Water Loop Heat Pump				Ground Water Heat Pump				Ground Loop Heat Pump			
		Cooling 86°F		Heating 68°F		Cooling 59°F		Heating 50°F		Full Cooling 77°F		Full Heating 32°F	
		Capacity Btuh	EER W/W	Capacity Btuh	COP	Capacity Btuh	EER W/W	Capacity Btuh	COP	Capacity Btuh	EER W/W	Capacity Btuh	COP
TC-006	PSC	1.70	3.9	2.20	4.7	2.02	6.2	1.82	4.0	1.82	4.5	1.44	3.4
TC-009	PSC	2.58	3.9	3.40	4.3	2.96	6.2	2.87	3.9	2.72	4.6	2.31	3.4
TC-012	PSC	3.43	4.0	4.45	4.3	4.01	6.1	3.66	3.8	3.52	4.4	2.90	3.2
TC-015	PSC	4.25	4.5	5.07	5.0	4.92	7.2	4.22	4.4	4.39	5.0	3.25	3.6
	ECM	4.25	4.5	4.92	5.1	4.92	7.3	4.04	4.4	4.39	5.2	3.19	3.6
TC-018	PSC	5.07	4.2	6.30	5.0	6.04	6.3	5.04	4.2	5.39	4.8	4.07	3.4
	ECM	5.74	4.7	6.45	5.3	6.54	6.9	5.33	4.4	5.92	5.3	4.13	3.8
TC-024	PSC	6.94	3.9	8.35	4.7	7.82	6.1	7.03	4.1	7.30	4.5	5.42	3.3
	ECM	6.97	4.2	8.12	4.9	7.82	6.3	6.87	4.1	7.30	4.8	5.42	3.5
TC-030	PSC	8.23	3.9	10.28	4.6	9.29	5.9	8.67	4.1	8.47	4.4	6.86	3.4
	ECM	8.29	4.2	10.49	4.8	9.49	6.4	8.79	4.4	8.58	4.8	6.91	3.7
TC-036	PSC	10.11	4.0	13.24	4.4	11.34	6.1	10.99	4.0	10.34	4.4	8.67	3.3
	ECM	10.11	4.1	12.72	4.5	11.43	6.1	10.49	4.0	10.37	4.5	8.41	3.4
TCV-041	PSC	10.69	3.9	13.39	4.3	12.13	5.8	11.13	3.7	11.13	4.3	8.82	3.2
TC-042	PSC	11.75	3.9	15.44	4.3	13.45	5.7	12.89	3.8	11.87	4.2	10.05	3.2
	ECM	12.34	4.4	14.77	4.5	13.60	6.4	12.42	4.0	12.36	4.9	9.93	3.4
TC-048	PSC	13.98	3.9	16.38	4.7	15.91	6.0	13.62	4.1	14.36	4.3	10.67	3.4
	ECM	14.03	4.2	15.53	4.8	15.70	6.2	13.36	4.3	14.36	4.7	10.67	3.6
TC-060	PSC	17.40	3.9	21.10	4.3	19.51	5.8	17.58	3.9	17.61	4.3	14.80	3.3
	ECM	17.58	4.3	20.86	4.4	19.63	6.2	17.46	4.0	17.99	4.8	13.92	3.4

Cooling capacities based upon 27°C DB, 19°C WB entering air temperature
Heating capacities based upon 20°C DB, 15°C WB entering air temperature
All ratings based upon operation at lower voltage of dual voltage rated models

ClimateMaster works continually to improve its products. As a result, the design and specifications of each product at the time of order may be changed without notice and may not be as described herein. Please contact ClimateMaster's Customer Service Department at 1-405-745-6000 for specific information on the current design and specifications. Statements and other information contained herein are not express warranties and do not form the basis of any bargain between the parties, but are merely ClimateMaster's opinion or commendation of its products. The latest version of this document is available at **climatemaster.com**.

For operation in the shaded area when water is used in lieu of an antifreeze solution, the LWT (Leaving Water Temperature) must be calculated. Flow must be maintained to a level such that the LWT is maintained above 40°F [4.4°C] when the JW3 jumper is not clipped (see example below). Otherwise, appropriate levels of a proper antifreeze solution should be used in systems with leaving water temperatures of 40ºF or below and the JW3 jumper should be clipped. This is due to the potential of the refrigerant temperature being as low as 32°F [0°C] with 40°F [4.4°C] LWT, which may lead to a nuisance cutout due to the activation of the Low Temperature Protection. JW3 should never be clipped for standard range equipment or systems without antifreeze.

Heating - EAT 70°F					
Airflow CFM	HC	kW	HE	LAT	COP
860	22.6	2.67	14.1	94	2.49
1150	23.2	2.39	15.1	89	2.84
860	25.6	2.80	16.6	98	2.68
1150	26.2	2.51	17.7	91	3.06
860	26.8	2.85	17.6	99	2.76
1150	27.5	2.56	18.8	92	3.15
860	27.5	2.88	18.2	100	2.80
1150	28.2	2.59	19.4	93	3.19
860	30.1	2.98	20.3	102	2.95
1150	30.8	2.68	21.7	95	3.37
860	31.6	3.05	21.6	104	3.04
1150	32.4	2.74	23.1	96	3.47
860	32.4	3.08	22.3	105	3.09
1150	33.2	2.77	23.8	97	3.52
860	34.5	3.16	24.1	107	3.20
1150	35.4	2.84	25.7	98	3.65
860	36.3	3.23	25.6	109	3.30
1150	37.2	2.90	27.3	100	3.76
860	37.3	3.27	26.4	110	3.35
1150	38.2	2.93	28.2	101	3.82
860	38.9	3.32	27.8	112	3.43
1150	39.8	2.99	29.7	102	3.91
860	40.9	3.40	29.5	114	3.53
1150	41.9	3.05	31.5	104	4.02
860	42.0	3.44	30.4	115	3.58
1150	43.0	3.09	32.5	105	4.08
	43.1	3.47	31.4	116	3.6
	44.1	3.12	33.5	106	
		3.55	33.2		

Example:

At 50°F EWT (Entering Water Temperature) and 2.25 gpm/ton, a 3 ton unit has a HE of 27,300 Btuh. To calculate LWT, rearrange the formula for HE as follows:

HE = TD x GPM x 500, where HE = Heat of Extraction (Btuh); TD = temperature difference (EWT - LWT) and GPM = U.S. Gallons per Minute.

TD = HE / (GPM x 500)

TD = 27,300 / (6.75 x 500)

TD = 8°F

LWT = EWT - TD

LWT = 50 - 8 = 42°F

In this example, as long as the EWT does not fall below 50°F, the system will operate as designed. For EWTs below 50°F, higher flow rates will be required (open loop systems, for example, require at least 2 gpm/ton when EWT is below 50°F).

ClimateMaster works continually to improve its products. As a result, the design and specifications of each product at the time of order may be changed without notice and may not be as described herein. Please contact ClimateMaster's Customer Service Department at 1-405-745-6000 for specific information on the current design and specifications. Statements and other information contained herein are not express warranties and do not form the basis of any bargain between the parties, but are merely ClimateMaster's opinion or commendation of its products. The latest version of this document is available at **climatemaster.com**.

Performance Data – TC H/V 006 (PSC Blower)

220 CFM Nominal (Rated) Airflow

Performance capacities shown in thousands of Btuh

EWT °F	GPM	WPD		Cooling - EAT 80/67°F							Heating - EAT 70°F					
		PSI	FT	Airflow CFM	TC	SC	Sens/Tot Ratio	kW	HR	EER	Airflow CFM	HC	kW	HE	LAT	COP
20	1.5	1.7	4.0	Operation not recommended							170	4.3	0.49	2.7	93.3	2.6
	1.5	1.7	4.0								225	4.4	0.44	2.9	88.0	2.9
30	0.8	0.5	1.2	170	7.4	4.2	0.57	0.28	8.4	26.4	170	4.6	0.50	3.0	95.2	2.7
	0.8	0.5	1.2	225	7.7	4.8	0.62	0.29	8.7	26.4	225	4.7	0.45	3.2	89.5	3.1
	1.1	0.8	1.8	170	7.4	4.1	0.55	0.26	8.3	28.5	170	4.8	0.51	3.2	96.2	2.8
	1.1	0.8	1.8	225	7.7	4.6	0.60	0.27	8.6	28.5	225	4.9	0.46	3.4	90.3	3.2
	1.5	1.3	2.9	170	7.3	4.0	0.54	0.25	8.2	29.2	170	4.9	0.51	3.2	96.8	2.8
	1.5	1.3	2.9	225	7.6	4.5	0.59	0.26	8.5	29.2	225	5.0	0.46	3.5	90.7	3.2
40	0.8	0.4	0.9	170	7.3	4.3	0.59	0.31	8.3	23.2	170	5.3	0.52	3.6	98.8	3.0
	0.8	0.4	0.9	225	7.6	4.8	0.64	0.33	8.7	23.2	225	5.4	0.47	3.8	92.3	3.4
	1.1	0.6	1.4	170	7.4	4.2	0.57	0.29	8.4	25.8	170	5.5	0.53	3.8	100.2	3.1
	1.1	0.6	1.4	225	7.7	4.8	0.62	0.30	8.7	25.8	225	5.7	0.47	4.1	93.3	3.5
	1.5	1.0	2.4	170	7.4	4.2	0.56	0.28	8.4	26.9	170	5.7	0.53	3.9	100.9	3.1
	1.5	1.0	2.4	225	7.7	4.7	0.61	0.29	8.7	26.9	225	5.8	0.48	4.2	93.9	3.6
50	0.8	0.3	0.8	170	6.9	4.2	0.61	0.35	8.1	19.9	170	6.0	0.54	4.2	102.7	3.3
	0.8	0.3	0.8	225	7.2	4.8	0.66	0.36	8.5	19.9	225	6.1	0.48	4.5	95.3	3.7
	1.1	0.5	1.2	170	7.2	4.3	0.59	0.32	8.3	22.5	170	6.3	0.55	4.5	104.4	3.4
	1.1	0.5	1.2	225	7.5	4.8	0.64	0.33	8.6	22.5	225	6.5	0.49	4.8	96.6	3.9
	1.5	0.9	2.0	170	7.3	4.3	0.58	0.31	8.3	23.8	170	6.5	0.55	4.6	105.4	3.4
	1.5	0.9	2.0	225	7.6	4.8	0.63	0.32	8.7	23.8	225	6.7	0.50	5.0	97.4	3.9
60	0.8	0.3	0.6	170	6.5	4.1	0.63	0.39	7.9	16.8	170	6.7	0.56	4.9	106.7	3.5
	0.8	0.3	0.6	225	6.8	4.7	0.69	0.40	8.2	16.8	225	6.9	0.50	5.2	98.4	4.0
	1.1	0.5	1.0	170	6.9	4.2	0.61	0.36	8.1	19.1	170	7.1	0.57	5.2	108.6	3.7
	1.1	0.5	1.0	225	7.1	4.8	0.67	0.37	8.4	19.1	225	7.3	0.51	5.5	99.9	4.2
	1.5	0.8	1.8	170	7.0	4.2	0.61	0.34	8.2	20.4	170	7.3	0.57	5.3	109.7	3.7
	1.5	0.8	1.8	225	7.3	4.8	0.66	0.36	8.5	20.4	225	7.5	0.51	5.7	100.7	4.3
70	0.8	0.2	0.5	170	6.0	4.0	0.66	0.43	7.5	14.0	170	7.4	0.58	5.5	110.5	3.8
	0.8	0.2	0.5	225	6.3	4.5	0.72	0.45	7.8	14.0	225	7.6	0.52	5.9	101.4	4.3
	1.1	0.4	0.9	170	6.4	4.1	0.64	0.40	7.8	16.0	170	7.8	0.58	5.8	112.4	3.9
	1.1	0.4	0.9	225	6.7	4.6	0.70	0.42	8.1	16.0	225	8.0	0.53	6.2	102.8	4.5
	1.5	0.7	1.6	170	6.6	4.1	0.63	0.38	7.9	17.1	170	8.0	0.59	5.9	113.4	4.0
	1.5	0.7	1.6	225	6.8	4.7	0.69	0.40	8.2	17.1	225	8.2	0.53	6.4	103.6	4.5
80	0.8	0.2	0.5	170	5.6	3.8	0.68	0.47	7.2	12.0	170	7.9	0.59	5.9	113.2	4.0
	0.8	0.2	0.5	225	5.8	4.3	0.74	0.49	7.5	12.0	225	8.1	0.53	6.3	103.5	4.5
	1.1	0.4	0.8	170	5.9	3.9	0.67	0.45	7.4	13.2	170	8.3	0.60	6.3	115.4	4.1
	1.1	0.4	0.8	225	6.1	4.4	0.73	0.46	7.7	13.2	225	8.5	0.54	6.7	105.1	4.6
	1.5	0.6	1.5	170	6.2	4.0	0.65	0.42	7.6	14.7	170	8.4	0.60	6.3	115.7	4.1
	1.5	0.6	1.5	225	6.4	4.6	0.71	0.44	7.9	14.7	225	8.6	0.54	6.7	105.3	4.6
85	0.8	0.2	0.5	170	5.3	3.7	0.70	0.50	7.0	10.7	170	8.2	0.60	6.2	114.7	4.0
	0.8	0.2	0.5	225	5.5	4.2	0.76	0.52	7.3	10.7	225	8.4	0.50	6.6	104.6	4.6
	1.1	0.3	0.8	170	5.6	3.8	0.68	0.47	7.2	11.9	170	8.5	0.60	6.4	116.2	4.1
	1.1	0.3	0.8	225	5.8	4.3	0.74	0.49	7.5	11.9	225	8.7	0.50	6.8	105.8	4.7
	1.5	0.6	1.4	170	5.8	3.9	0.67	0.45	7.4	13.1	170	8.5	0.60	6.4	116.4	4.1
	1.5	0.6	1.4	225	6.1	4.4	0.73	0.47	7.7	13.1	225	8.7	0.50	6.8	105.9	4.7
90	0.8	0.2	0.4	170	5.0	3.6	0.72	0.53	6.7	9.4	170	8.5	0.61	6.4	116.3	4.1
	0.8	0.2	0.4	225	5.2	4.1	0.79	0.55	7.0	9.4	225	8.7	0.55	6.8	105.8	4.7
	1.1	0.3	0.7	170	5.3	3.7	0.70	0.49	7.0	10.7	170	8.6	0.62	6.5	117.0	4.1
	1.1	0.3	0.7	225	5.5	4.2	0.76	0.52	7.3	10.7	225	8.8	0.55	7.0	106.4	4.7
	1.5	0.6	1.3	170	5.5	3.8	0.69	0.48	7.1	11.5	170	8.7	0.62	6.5	117.1	4.1
	1.5	0.6	1.3	225	5.7	4.3	0.75	0.50	7.4	11.5	225	8.9	0.56	7.0	106.5	4.7
100	0.8	0.2	0.4	170	4.4	3.4	0.76	0.58	6.4	7.6	Operation not recommended					
	0.8	0.2	0.4	225	4.6	3.8	0.83	0.60	6.6	7.6						
	1.1	0.3	0.7	170	4.7	3.5	0.74	0.55	6.6	8.7						
	1.1	0.3	0.7	225	4.9	4.0	0.80	0.57	6.9	8.7						
	1.5	0.5	1.2	170	4.9	3.6	0.73	0.53	6.7	9.3						
	1.5	0.5	1.2	225	5.1	4.0	0.79	0.55	7.0	9.3						
110	0.8	0.2	0.3	170	3.9	3.1	0.81	0.63	6.0	6.2						
	0.8	0.2	0.3	225	4.1	3.6	0.87	0.66	6.3	6.2						
	1.1	0.3	0.6	170	4.2	3.3	0.78	0.60	6.2	7.0						
	1.1	0.3	0.6	225	4.4	3.7	0.85	0.62	6.5	7.0						
	1.5	0.5	1.2	170	4.3	3.3	0.77	0.58	6.3	7.4						
	1.5	0.5	1.2	225	4.5	3.8	0.83	0.61	6.6	7.4						
120	0.8	0.1	0.3	170	3.5	3.0	0.85	0.68	5.8	5.0						
	0.8	0.1	0.3	225	3.6	3.3	0.93	0.71	6.0	5.0						
	1.1	0.3	0.6	170	3.7	3.0	0.83	0.65	5.9	5.6						
	1.1	0.3	0.6	225	3.8	3.4	0.90	0.68	6.2	5.6						
	1.5	0.5	1.1	170	3.8	3.1	0.81	0.64	6.0	6.0						
	1.5	0.5	1.1	225	4.0	3.5	0.88	0.67	6.2	6.0						

Interpolation is permissible; extrapolation is not.
All entering air conditions are 80°F DB and 67°F WB in cooling, and 70°F DB in heating.
AHRI/ISO certified conditions are 80.6°F DB and 66.2°F WB in cooling and 68°F DB in heating.
Table does not reflect fan or pump power corrections for AHRI/ISO conditions.
All performance is based upon the lower voltage of dual voltage rated units.
Performance stated is at the rated power supply; performance may vary as the power supply varies from the rated.
Operation below 40°F EWT is based upon a 15% methanol antifreeze solution.
Operation below 60°F EWT requires optional insulated water/refrigerant circuit.
See performance correction tables for operating conditions other than those listed above.
See Performance Data Selection Notes for operation in the shaded areas.

ClimateMaster works continually to improve its products. As a result, the design and specifications of each product at the time of order may be changed without notice and may not be as described herein. Please contact ClimateMaster's Customer Service Department at 1-405-745-6000 for specific information on the current design and specifications. Statements and other information contained herein are not express warranties and do not form the basis of any bargain between the parties, but are merely ClimateMaster's opinion or commendation of its products. The latest version of this document is available at **climatemaster.com**.

Performance Data – TC H/V 009 (PSC Blower)

325 CFM Nominal (Rated) Airflow

Performance capacities shown in thousands of Btuh

EWT °F	GPM	WPD		Cooling - EAT 80/67°F							Heating - EAT 70°F					
		PSI	FT	Airflow CFM	TC	SC	Sens/Tot Ratio	kW	HR	EER	Airflow CFM	HC	kW	HE	LAT	COP
20	2.3	4.5	10.5	Operation not recommended							250	6.5	0.73	4.2	94.2	2.6
	2.3	4.5	10.5								330	6.7	0.66	4.4	88.8	3.0
30	1.1	1.3	3.0	250	10.2	6.0	0.59	0.39	11.6	26.6	250	7.1	0.74	4.7	96.3	2.8
	1.1	1.3	3.0	330	10.7	6.8	0.64	0.40	12.0	26.6	330	7.3	0.67	5.0	90.4	3.2
	1.7	1.9	4.4	250	10.5	6.0	0.57	0.36	11.7	29.5	250	7.4	0.75	4.9	97.4	2.9
	1.7	1.9	4.4	330	10.9	6.8	0.62	0.37	12.2	29.5	330	7.6	0.67	5.3	91.2	3.3
	2.3	3.5	8.1	250	10.6	6.0	0.56	0.34	11.8	31.1	250	7.5	0.75	5.1	97.9	2.9
	2.3	3.5	8.1	330	11.0	6.8	0.61	0.36	12.3	31.1	330	7.7	0.68	5.4	91.7	3.4
40	1.1	0.9	2.0	250	9.9	6.0	0.61	0.43	11.3	22.8	250	8.0	0.76	5.5	99.8	3.1
	1.1	0.9	2.0	330	10.3	6.8	0.66	0.45	11.8	22.8	330	8.2	0.69	5.9	93.1	3.5
	1.7	1.5	3.5	250	10.1	6.0	0.59	0.40	11.5	25.4	250	8.4	0.77	5.8	101.1	3.2
	1.7	1.5	3.5	330	10.5	6.8	0.64	0.41	12.0	25.4	330	8.6	0.69	6.2	94.1	3.6
	2.3	3.0	6.8	250	10.3	6.0	0.59	0.38	11.6	26.8	250	8.6	0.78	6.0	101.8	3.2
	2.3	3.0	6.8	330	10.7	6.8	0.64	0.40	12.0	26.9	330	8.8	0.70	6.4	94.7	3.7
50	1.1	0.6	1.5	250	9.4	6.0	0.63	0.48	11.1	19.5	250	9.0	0.79	6.4	103.3	3.4
	1.1	0.6	1.5	330	9.8	6.7	0.69	0.50	11.6	19.5	330	9.2	0.71	6.8	95.8	3.8
	1.7	1.3	2.9	250	9.7	6.0	0.62	0.45	11.3	21.7	250	9.4	0.80	6.7	104.8	3.5
	1.7	1.3	2.9	330	10.1	6.8	0.67	0.47	11.7	21.7	330	9.6	0.72	7.2	97.0	3.9
	2.3	2.6	6.0	250	9.9	6.0	0.61	0.43	11.3	23.0	250	9.6	0.80	6.9	105.6	3.5
	2.3	2.6	6.0	330	10.3	6.8	0.66	0.45	11.8	23.0	330	9.8	0.72	7.4	97.6	4.0
60	1.1	0.5	1.2	250	9.0	5.9	0.65	0.54	10.8	16.5	250	9.9	0.81	7.2	106.8	3.6
	1.1	0.5	1.2	330	9.4	6.7	0.71	0.57	11.3	16.5	330	10.2	0.73	7.7	98.5	4.1
	1.7	1.1	2.5	250	9.3	5.9	0.64	0.50	11.0	18.5	250	10.4	0.82	7.6	108.4	3.7
	1.7	1.1	2.5	330	9.7	6.7	0.69	0.52	11.5	18.5	330	10.6	0.74	8.1	99.8	4.2
	2.3	2.3	5.4	250	9.5	6.0	0.63	0.48	11.1	19.6	250	10.6	0.83	7.8	109.3	3.7
	2.3	2.3	5.4	330	9.8	6.7	0.69	0.50	11.6	19.6	330	10.9	0.75	8.3	100.5	4.3
70	1.1	0.4	0.9	250	8.5	5.8	0.68	0.61	10.6	14.0	250	10.8	0.84	8.0	110.1	3.8
	1.1	0.4	0.9	330	8.8	6.5	0.74	0.63	11.0	14.0	330	11.1	0.75	8.5	101.1	4.3
	1.7	1.0	2.3	250	8.8	5.8	0.66	0.56	10.7	15.6	250	11.3	0.85	8.4	111.9	3.9
	1.7	1.0	2.3	330	9.2	6.6	0.72	0.59	11.2	15.6	330	11.6	0.77	9.0	102.5	4.4
	2.3	2.1	4.9	250	9.1	5.9	0.65	0.53	10.9	17.1	250	11.4	0.85	8.5	112.1	3.9
	2.3	2.1	4.9	330	9.5	6.7	0.71	0.55	11.3	17.1	330	11.6	0.77	9.0	102.7	4.4
80	1.1	0.3	0.8	250	8.0	5.6	0.70	0.67	10.3	11.8	250	11.7	0.87	8.7	113.3	4.0
	1.1	0.3	0.8	330	8.3	6.3	0.77	0.70	10.7	11.8	330	12.0	0.78	9.3	103.6	4.5
	1.7	0.9	2.1	250	8.3	5.7	0.69	0.63	10.5	13.2	250	12.2	0.88	9.1	115.1	4.0
	1.7	0.9	2.1	330	8.6	6.5	0.75	0.66	10.9	13.2	330	12.5	0.79	9.8	105.0	4.6
	2.3	2.0	4.6	250	8.6	5.8	0.67	0.59	10.6	14.4	250	12.2	0.88	9.2	115.4	4.1
	2.3	2.0	4.6	330	8.9	6.5	0.73	0.62	11.1	14.4	330	12.5	0.79	9.8	105.2	4.6
85	1.1	0.3	0.7	250	7.7	5.5	0.71	0.70	10.1	11.0	250	12.0	0.88	9.0	114.5	4.0
	1.1	0.3	0.7	330	8.0	6.2	0.78	0.73	10.5	11.0	330	12.3	0.80	9.6	104.6	4.6
	1.7	0.9	2.0	250	8.0	5.6	0.70	0.67	10.3	12.1	250	12.6	0.90	9.5	116.5	4.1
	1.7	0.9	2.0	330	8.4	6.4	0.76	0.69	10.7	12.1	330	12.9	0.80	10.1	106.1	4.7
	2.3	1.9	4.4	250	8.3	5.7	0.69	0.63	10.5	13.3	250	12.6	0.90	9.5	116.8	4.1
	2.3	1.9	4.4	330	8.7	6.5	0.75	0.65	10.9	13.3	330	12.9	0.80	10.2	106.3	4.7
90	1.1	0.3	0.6	250	7.5	5.4	0.72	0.73	10.0	10.2	250	12.3	0.89	9.3	115.7	4.1
	1.1	0.3	0.6	330	7.8	6.2	0.79	0.76	10.4	10.2	330	12.6	0.80	9.9	105.5	4.6
	1.7	0.8	1.9	250	7.7	5.5	0.71	0.70	10.1	11.1	250	12.9	0.91	9.8	117.9	4.2
	1.7	0.8	1.9	330	8.1	6.3	0.78	0.73	10.6	11.1	330	13.3	0.82	10.5	107.2	4.8
	2.3	1.8	4.3	250	8.0	5.6	0.70	0.66	10.3	12.1	250	13.0	0.91	9.9	118.2	4.2
	2.3	1.8	4.3	330	8.4	6.4	0.76	0.69	10.7	12.1	330	13.3	0.82	10.5	107.4	4.8
100	1.1	0.2	0.6	250	6.8	5.1	0.76	0.82	9.6	8.2	Operation not recommended					
	1.1	0.2	0.6	330	7.0	5.8	0.82	0.86	10.0	8.2						
	1.7	0.8	1.7	250	7.1	5.3	0.74	0.78	9.8	9.2						
	1.7	0.8	1.7	330	7.4	6.0	0.81	0.81	10.2	9.2						
	2.3	1.7	4.0	250	7.3	5.4	0.73	0.75	9.9	9.7						
	2.3	1.7	4.0	330	7.6	6.1	0.80	0.78	10.3	9.7						
110	1.1	0.2	0.5	250	6.1	4.8	0.79	0.90	9.2	6.8						
	1.1	0.2	0.5	330	6.3	5.4	0.85	0.94	9.5	6.8						
	1.7	0.7	1.6	250	6.5	5.0	0.77	0.86	9.4	7.6						
	1.7	0.7	1.6	330	6.8	5.6	0.84	0.89	9.8	7.6						
	2.3	1.6	3.8	250	6.7	5.1	0.76	0.83	9.5	8.0						
	2.3	1.6	3.8	330	7.0	5.8	0.83	0.87	9.9	8.0						
120	1.1	0.2	0.4	250	5.4	4.4	0.82	0.98	8.7	5.5						
	1.1	0.2	0.4	330	5.6	5.0	0.89	1.02	9.1	5.5						
	1.7	0.7	1.6	250	5.8	4.6	0.80	0.94	9.0	6.2						
	1.7	0.7	1.6	330	6.0	5.2	0.87	0.98	9.4	6.2						
	2.3	1.6	3.6	250	6.0	4.7	0.79	0.91	9.1	6.5						
	2.3	1.6	3.6	330	6.2	5.4	0.86	0.95	9.5	6.5						

Interpolation is permissible; extrapolation is not.
All entering air conditions are 80°F DB and 67°F WB in cooling, and 70°F DB in heating.
AHRI/ISO certified conditions are 80.6°F DB and 66.2°F WB in cooling and 68°F DB in heating.
Table does not reflect fan or pump power corrections for AHRI/ISO conditions.
All performance is based upon the lower voltage of dual voltage rated units.
Performance stated is at the rated power supply; performance may vary as the power supply varies from the rated.
Operation below 40°F EWT is based upon a 15% methanol antifreeze solution.
Operation below 60°F EWT requires optional insulated water/refrigerant circuit.
See performance correction tables for operating conditions other than those listed above.
See Performance Data Selection Notes for operation in the shaded areas.

ClimateMaster works continually to improve its products. As a result, the design and specifications of each product at the time of order may be changed without notice and may not be as described herein. Please contact ClimateMaster's Customer Service Department at 1-405-745-6000 for specific information on the current design and specifications. Statements and other information contained herein are not express warranties and do not form the basis of any bargain between the parties, but are merely ClimateMaster's opinion or commendation of its products. The latest version of this document is available at **climatemaster.com**.

Performance Data – TC H/V 012 (PSC Blower)

400 CFM Nominal (Rated) Airflow

Performance capacities shown in thousands of Btuh

EWT °F	GPM	WPD		Cooling - EAT 80/67°F							Heating - EAT 70°F					
		PSI	FT	Airflow CFM	TC	SC	Sens/Tot Ratio	kW	HR	EER	Airflow CFM	HC	kW	HE	LAT	COP
20	3.0	8.5	19.6	Operation not recommended							300	8.5	0.98	5.3	96.2	2.5
	3.0	8.5	19.6								400	8.7	0.88	5.7	90.2	2.9
30	1.5	1.9	4.3	300	14.2	8.2	0.58	0.55	16.1	25.8	300	9.3	1.00	6.0	98.6	2.7
	1.5	1.9	4.3	400	14.8	9.3	0.63	0.57	16.8	25.8	400	9.5	0.90	6.4	91.9	3.1
	2.3	3.6	8.4	300	14.3	8.2	0.58	0.51	16.1	27.9	300	9.6	1.01	6.3	99.7	2.8
	2.3	3.6	8.4	400	14.9	9.3	0.63	0.53	16.7	27.9	400	9.9	0.91	6.8	92.8	3.2
	3.0	6.7	15.5	300	14.3	8.2	0.58	0.50	16.0	28.8	300	9.8	1.02	6.5	100.4	2.8
	3.0	6.7	15.5	400	14.9	9.3	0.63	0.52	16.6	28.8	400	10.1	0.92	7.0	93.3	3.2
40	1.5	1.4	3.2	300	14.0	8.1	0.58	0.61	16.0	22.9	300	10.6	1.04	7.1	102.6	3.0
	1.5	1.4	3.2	400	14.5	9.2	0.63	0.63	16.7	22.9	400	10.8	0.93	7.6	95.0	3.4
	2.3	3.0	6.9	300	14.2	8.2	0.58	0.57	16.1	25.1	300	11.0	1.05	7.6	104.1	3.1
	2.3	3.0	6.9	400	14.8	9.3	0.63	0.59	16.8	25.1	400	11.3	0.94	8.1	96.2	3.5
	3.0	5.7	13.1	300	14.3	8.2	0.58	0.54	16.1	26.2	300	11.3	1.06	7.8	104.9	3.1
	3.0	5.7	13.1	400	14.8	9.3	0.63	0.57	16.8	26.2	400	11.6	0.95	8.3	96.8	3.6
50	1.5	1.1	2.5	300	13.5	7.9	0.58	0.67	15.8	20.1	300	11.9	1.08	8.3	106.8	3.2
	1.5	1.1	2.5	400	14.1	8.9	0.63	0.70	16.5	20.1	400	12.2	0.97	8.9	98.2	3.7
	2.3	2.6	6.0	300	13.9	8.0	0.58	0.62	16.0	22.2	300	12.5	1.09	8.9	108.6	3.4
	2.3	2.6	6.0	400	14.4	9.1	0.63	0.65	16.7	22.2	400	12.8	0.98	9.5	99.6	3.8
	3.0	5.0	11.5	300	14.0	8.1	0.58	0.60	16.1	23.3	300	12.8	1.10	9.1	109.6	3.4
	3.0	5.0	11.5	400	14.6	9.2	0.63	0.63	16.7	23.3	400	13.1	0.99	9.8	100.4	3.9
60	1.5	0.9	2.1	300	12.9	7.6	0.59	0.74	15.5	17.4	300	13.3	1.11	9.6	111.1	3.5
	1.5	0.9	2.1	400	13.5	8.6	0.64	0.77	16.1	17.4	400	13.6	1.00	10.2	101.5	4.0
	2.3	2.3	5.3	300	13.4	7.8	0.58	0.69	15.7	19.3	300	14.0	1.13	10.2	113.1	3.6
	2.3	2.3	5.3	400	13.9	8.8	0.63	0.72	16.4	19.3	400	14.3	1.02	10.8	103.1	4.1
	3.0	4.5	10.3	300	13.6	7.9	0.58	0.67	15.8	20.4	300	14.3	1.14	10.5	114.2	3.7
	3.0	4.5	10.3	400	14.1	8.9	0.63	0.69	16.5	20.4	400	14.7	1.03	11.2	104.0	4.2
70	1.5	0.8	1.8	300	12.2	7.3	0.60	0.82	15.0	14.9	300	14.7	1.15	10.8	115.3	3.7
	1.5	0.8	1.8	400	12.7	8.3	0.65	0.85	15.6	14.9	400	15.0	1.04	11.5	104.8	4.2
	2.3	2.1	4.8	300	12.5	7.4	0.59	0.77	15.2	16.3	300	15.4	1.18	11.4	117.6	3.8
	2.3	2.1	4.8	400	13.1	8.4	0.64	0.80	15.8	16.3	400	15.8	1.06	12.2	106.5	4.4
	3.0	4.1	9.5	300	12.7	7.5	0.59	0.75	15.3	17.0	300	15.8	1.19	11.7	118.8	3.9
	3.0	4.1	9.5	400	13.3	8.5	0.64	0.78	15.9	17.0	400	16.2	1.07	12.5	107.5	4.4
80	1.5	0.7	1.5	300	11.4	7.0	0.61	0.90	14.5	12.7	300	16.0	1.20	11.9	119.4	3.9
	1.5	0.7	1.5	400	11.9	7.9	0.67	0.94	15.1	12.7	400	16.4	1.08	12.7	108.0	4.5
	2.3	1.9	4.4	300	11.8	7.1	0.60	0.85	14.7	13.9	300	16.8	1.22	12.6	121.7	4.0
	2.3	1.9	4.4	400	12.3	8.0	0.65	0.88	15.3	13.9	400	17.2	1.10	13.4	109.8	4.6
	3.0	3.8	8.8	300	12.0	7.2	0.60	0.83	14.8	14.5	300	17.2	1.24	12.9	123.0	4.1
	3.0	3.8	8.8	400	12.5	8.1	0.65	0.86	15.4	14.5	400	17.6	1.11	13.8	110.7	4.6
85	1.5	0.6	1.5	300	10.9	6.8	0.62	0.9	14.2	11.7	300	16.6	1.22	12.5	121.3	4.0
	1.5	0.6	1.5	400	11.4	7.7	0.68	0.98	14.7	11.7	400	17.0	1.1	13.3	109.4	4.6
	2.3	1.8	4.2	300	11.4	6.9	0.61	0.89	14.4	12.8	300	17.4	1.3	13.1	123.6	4.1
	2.3	1.8	4.2	400	11.9	7.9	0.66	0.93	15.0	12.8	400	17.8	1.1	14.0	111.2	4.6
	3.0	3.7	8.5	300	11.6	7.0	0.60	0.87	14.5	13.4	300	17.7	1.3	13.4	124.8	4.1
	3.0	3.7	8.5	400	12.1	7.9	0.66	0.90	15.1	13.4	400	18.2	1.1	14.3	112.1	4.7
90	1.5	0.6	1.4	300	10.5	6.7	0.63	0.99	13.9	10.7	300	17.3	1.24	13.0	123.3	4.1
	1.5	0.6	1.4	400	10.9	7.5	0.69	1.03	14.4	10.7	400	17.7	1.12	13.9	110.9	4.6
	2.3	1.8	4.1	300	11.0	6.8	0.62	0.93	14.1	11.7	300	18.0	1.28	13.6	125.5	4.1
	2.3	1.8	4.1	400	11.4	7.7	0.67	0.97	14.7	11.7	400	18.4	1.15	14.5	112.6	4.7
	3.0	3.6	8.2	300	11.2	6.8	0.61	0.91	14.3	12.3	300	18.3	1.29	13.9	126.6	4.2
	3.0	3.6	8.2	400	11.6	7.7	0.67	0.95	14.8	12.3	400	18.8	1.16	14.8	113.5	4.7
100	1.5	0.5	1.2	300	9.5	6.4	0.67	1.07	13.2	8.9	Operation not recommended					
	1.5	0.5	1.2	400	9.9	7.2	0.72	1.12	13.8	8.9						
	2.3	1.7	3.8	300	10.1	6.5	0.65	1.02	13.5	9.8						
	2.3	1.7	3.8	400	10.5	7.3	0.70	1.06	14.1	9.8						
	3.0	3.3	7.7	300	10.4	6.6	0.64	1.00	13.8	10.4						
	3.0	3.3	7.7	400	10.8	7.5	0.69	1.04	14.3	10.4						
110	1.5	0.5	1.1	300	8.5	6.0	0.71	1.17	12.5	7.3						
	1.5	0.5	1.1	400	8.9	6.8	0.77	1.22	13.1	7.3						
	2.3	1.6	3.6	300	9.1	6.2	0.68	1.12	12.9	8.1						
	2.3	1.6	3.6	400	9.4	7.0	0.74	1.16	13.4	8.1						
	3.0	3.2	7.3	300	9.4	6.3	0.67	1.09	13.1	8.6						
	3.0	3.2	7.3	400	9.8	7.1	0.73	1.14	13.7	8.6						
120	1.5	0.4	1.0	300	7.5	5.7	0.76	1.27	11.8	5.9						
	1.5	0.4	1.0	400	7.8	6.4	0.82	1.32	12.3	5.9						
	2.3	1.5	3.4	300	8.0	5.8	0.73	1.22	12.2	6.6						
	2.3	1.5	3.4	400	8.3	6.6	0.79	1.27	12.7	6.6						
	3.0	3.0	7.0	300	8.3	5.9	0.71	1.19	12.4	7.0						
	3.0	3.0	7.0	400	8.7	6.7	0.77	1.24	12.9	7.0						

Interpolation is permissible; extrapolation is not.
All entering air conditions are 80°F DB and 67°F WB in cooling, and 70°F DB in heating.
AHRI/ISO certified conditions are 80.6°F DB and 66.2°F WB in cooling and 68°F DB in heating.
Table does not reflect fan or pump power corrections for AHRI/ISO conditions.
All performance is based upon the lower voltage of dual voltage rated units.
Performance stated is at the rated power supply; performance may vary as the power supply varies from the rated.
Operation below 40°F EWT is based upon a 15% methanol antifreeze solution.
Operation below 60°F EWT requires optional insulated water/refrigerant circuit.
See performance correction tables for operating conditions other than those listed above.
See Performance Data Selection Notes for operation in the shaded areas.

ClimateMaster works continually to improve its products. As a result, the design and specifications of each product at the time of order may be changed without notice and may not be as described herein. Please contact ClimateMaster's Customer Service Department at 1-405-745-6000 for specific information on the current design and specifications. Statements and other information contained herein are not express warranties and do not form the basis of any bargain between the parties, but are merely ClimateMaster's opinion or commendation of its products. The latest version of this document is available at **climatemaster.com**.

Performance Data – TC H/V 015 (PSC Blower)

525 CFM Nominal (Rated) Airflow

Performance capacities shown in thousands of Btuh

EWT °F	GPM	WPD		Cooling - EAT 80/67°F							Heating - EAT 70°F					
		PSI	FT	Airflow CFM	TC	SC	Sens/Tot Ratio	kW	HR	EER	Airflow CFM	HC	kW	HE	LAT	COP
20	3.8	4.1	9.5	Operation not recommended							395	9.5	1.07	6.1	92	2.62
	3.8	4.1	9.5								525	9.8	0.96	6.5	87	2.98
30	1.9	1.0	2.3	395	17.3	10.8	0.62	0.61	19.4	28.4	395	10.6	1.09	7.1	95	2.84
	1.9	1.0	2.3	525	18.1	12.2	0.67	0.64	20.2	28.4	525	10.9	0.98	7.5	89	3.24
	2.8	1.8	4.3	395	17.5	10.8	0.62	0.56	19.4	31.1	395	11.1	1.11	7.5	96	2.94
	2.8	1.8	4.3	525	18.2	12.2	0.67	0.59	20.2	31.1	525	11.4	0.99	8.0	90	3.35
	3.8	3.3	7.7	395	17.5	10.8	0.62	0.54	19.4	32.2	395	11.3	1.11	7.7	97	2.99
	3.8	3.3	7.7	525	18.3	12.2	0.67	0.57	20.2	32.2	525	11.6	1.00	8.2	90	3.41
40	1.9	0.8	1.8	395	17.0	10.6	0.63	0.68	19.3	24.8	395	12.3	1.13	8.5	99	3.18
	1.9	0.8	1.8	525	17.7	12.0	0.68	0.71	20.1	24.8	525	12.6	1.02	9.1	92	3.62
	2.8	1.6	3.6	395	17.2	10.7	0.62	0.63	19.4	27.3	395	12.8	1.14	9.0	100	3.29
	2.8	1.6	3.6	525	18.0	12.1	0.68	0.66	20.2	27.3	525	13.1	1.03	9.7	93	3.75
	3.8	2.9	6.6	395	17.4	10.8	0.62	0.60	19.4	28.8	395	13.1	1.15	9.3	101	3.35
	3.8	2.9	6.6	525	18.1	12.2	0.67	0.63	20.2	28.8	525	13.5	1.03	10.0	94	3.82
50	1.9	0.6	1.5	395	16.4	10.4	0.63	0.76	19.0	21.6	395	13.9	1.16	10.0	103	3.50
	1.9	0.6	1.5	525	17.1	11.8	0.69	0.79	19.8	21.6	525	14.2	1.05	10.7	95	3.99
	2.8	1.4	3.1	395	16.8	10.6	0.63	0.71	19.2	23.8	395	14.6	1.18	10.6	104	3.63
	2.8	1.4	3.1	525	17.5	12.0	0.68	0.74	20.0	23.8	525	14.9	1.06	11.3	96	4.13
	3.8	2.5	5.8	395	17.0	10.6	0.63	0.68	19.3	25.0	395	14.9	1.18	10.9	105	3.69
	3.8	2.5	5.8	525	17.7	12.0	0.68	0.71	20.1	25.0	525	15.3	1.06	11.7	97	4.21
60	1.9	0.6	1.3	395	15.7	10.2	0.65	0.84	18.6	18.7	395	15.5	1.20	11.5	106	3.81
	1.9	0.6	1.3	525	16.4	11.5	0.70	0.88	19.4	18.7	525	15.9	1.07	12.2	98	4.34
	2.8	1.2	2.8	395	16.2	10.4	0.64	0.79	18.9	20.5	395	16.3	1.21	12.1	108	3.94
	2.8	1.2	2.8	525	16.9	11.7	0.69	0.82	19.7	20.5	525	16.7	1.09	13.0	99	4.50
	3.8	2.3	5.3	395	16.4	10.4	0.63	0.76	19.0	21.6	395	16.7	1.22	12.5	109	4.02
	3.8	2.3	5.3	525	17.1	11.8	0.69	0.79	19.8	21.6	525	17.1	1.09	13.3	100	4.58
70	1.9	0.5	1.1	395	15.2	10.1	0.66	0.93	18.3	16.2	395	17.1	1.22	12.9	110	4.10
	1.9	0.5	1.1	525	15.8	11.4	0.72	0.97	19.1	16.3	525	17.5	1.10	13.8	101	4.68
	2.8	1.1	2.5	395	15.5	10.1	0.65	0.88	18.5	17.6	395	18.0	1.24	13.7	112	4.25
	2.8	1.1	2.5	525	16.1	11.4	0.71	0.91	19.2	17.6	525	18.4	1.11	14.6	102	4.85
	3.8	2.1	4.9	395	15.8	10.2	0.65	0.85	18.6	18.6	395	18.4	1.25	14.1	113	4.33
	3.8	2.1	4.9	525	16.4	11.5	0.70	0.88	19.4	18.6	525	18.8	1.12	15.0	103	4.94
80	1.9	0.4	1.0	395	14.3	9.8	0.68	1.03	17.8	13.9	395	18.7	1.25	14.3	114	4.38
	1.9	0.4	1.0	525	14.9	11.1	0.74	1.07	18.5	13.9	525	19.2	1.12	15.3	104	5.00
	2.8	1.0	2.4	395	14.7	9.8	0.67	0.97	18.0	15.1	395	19.6	1.27	15.1	116	4.54
	2.8	1.0	2.4	525	15.3	11.1	0.73	1.01	18.7	15.1	525	20.1	1.14	16.2	105	5.18
	3.8	2.0	4.6	395	14.9	9.9	0.66	0.94	18.2	15.9	395	20.1	1.27	15.6	117	4.62
	3.8	2.0	4.6	525	15.6	11.2	0.72	0.98	18.9	15.9	525	20.6	1.14	16.6	106	5.27
85	1.9	0.4	0.9	395	13.8	9.6	0.70	1.1	17.5	12.8	395	19.5	1.26	15.0	116	4.52
	1.9	0.4	0.9	525	14.4	10.9	0.76	1.13	18.2	12.8	525	19.9	1.13	16.0	105	5.15
	2.8	1.0	2.3	395	14.2	9.7	0.68	1.02	17.7	13.9	395	20.4	1.28	15.9	118	4.68
	2.8	1.0	2.3	525	14.8	11.0	0.74	1.07	18.4	13.9	525	20.9	1.15	16.9	107	5.34
	3.8	1.9	4.4	395	14.5	9.8	0.67	0.99	17.9	14.7	395	20.9	1.29	16.3	119	4.77
	3.8	1.9	4.4	525	15.1	11.1	0.73	1.03	18.6	14.7	525	21.4	1.15	17.4	108	5.43
90	1.9	0.4	0.9	395	13.3	9.5	0.71	1.14	17.2	11.7	395	20.2	1.28	15.7	117	4.65
	1.9	0.4	0.9	525	13.9	10.7	0.77	1.19	18.0	11.7	525	20.7	1.15	16.8	107	5.30
	2.8	1.0	2.2	395	13.7	9.5	0.69	1.08	17.4	12.8	395	21.2	1.29	16.6	120	4.82
	2.8	1.0	2.2	525	14.3	10.8	0.75	1.12	18.1	12.8	525	21.7	1.16	17.7	108	5.49
	3.8	1.9	4.3	395	14.1	9.6	0.69	1.04	17.6	13.5	395	21.7	1.30	17.1	121	4.90
	3.8	1.9	4.3	525	14.6	10.9	0.74	1.08	18.3	13.5	525	22.2	1.17	18.2	109	5.59
100	1.9	0.4	0.8	395	12.4	9.2	0.74	1.25	16.6	9.9	Operation not recommended					
	1.9	0.4	0.8	525	12.9	10.4	0.80	1.31	17.3	9.9						
	2.8	0.9	2.1	395	12.8	9.2	0.72	1.19	16.8	10.8						
	2.8	0.9	2.1	525	13.3	10.4	0.78	1.23	17.5	10.8						
	3.8	1.8	4.1	395	13.1	9.3	0.71	1.15	17.0	11.4						
	3.8	1.8	4.1	525	13.6	10.5	0.77	1.20	17.7	11.4						
110	1.9	0.3	0.7	395	11.3	8.8	0.78	1.37	16.0	8.3						
	1.9	0.3	0.7	525	11.8	10.0	0.84	1.43	16.7	8.3						
	2.8	0.8	1.9	395	11.8	8.9	0.75	1.30	16.2	9.0						
	2.8	0.8	1.9	525	12.2	10.0	0.82	1.36	16.9	9.0						
	3.8	1.7	3.9	395	12.1	9.0	0.74	1.27	16.4	9.5						
	3.8	1.7	3.9	525	12.6	10.2	0.81	1.32	17.1	9.5						
120	1.9	0.3	0.7	395	10.3	8.5	0.82	1.50	15.5	6.9						
	1.9	0.3	0.7	525	10.8	9.6	0.89	1.56	16.1	6.9						
	2.8	0.8	1.8	395	10.7	8.5	0.79	1.43	15.6	7.5						
	2.8	0.8	1.8	525	11.2	9.6	0.86	1.48	16.2	7.5						
	3.8	1.6	3.7	395	11.0	8.6	0.78	1.39	15.8	7.9						
	3.8	1.6	3.7	525	11.5	9.8	0.85	1.45	16.4	7.9						

Interpolation is permissible; extrapolation is not.
All entering air conditions are 80°F DB and 67°F WB in cooling, and 70°F DB in heating.
AHRI/ISO certified conditions are 80.6°F DB and 66.2°F WB in cooling and 68°F DB in heating.
Table does not reflect fan or pump power corrections for AHRI/ISO conditions.
All performance is based upon the lower voltage of dual voltage rated units.
Performance stated is at the rated power supply; performance may vary as the power supply varies from the rated.
Operation below 40°F EWT is based upon a 15% methanol antifreeze solution.
Operation below 60°F EWT requires optional insulated water/refrigerant circuit.
See performance correction tables for operating conditions other than those listed above.
See Performance Data Selection Notes for operation in the shaded areas.

ClimateMaster works continually to improve its products. As a result, the design and specifications of each product at the time of order may be changed without notice and may not be as described herein. Please contact ClimateMaster's Customer Service Department at 1-405-745-6000 for specific information on the current design and specifications. Statements and other information contained herein are not express warranties and do not form the basis of any bargain between the parties, but are merely ClimateMaster's opinion or commendation of its products. The latest version of this document is available at **climatemaster.com**.

Performance Data – TC H/V 015 (ECM Blower)

500 CFM Nominal (Rated) Airflow

Performance capacities shown in thousands of Btuh

EWT °F	GPM	WPD		Cooling - EAT 80/67°F							Heating - EAT 70°F					
		PSI	FT	Airflow CFM	TC	SC	Sens/Tot Ratio	kW	HR	EER	Airflow CFM	HC	kW	HE	LAT	COP
20	3.8	4.1	9.5	Operation not recommended							395	9.6	1.01	6.1	92.0	2.8
	3.8	4.1	9.5								500	9.6	0.90	6.5	87.0	3.1
30	1.9	1.0	2.3	395	17.3	10.8	0.62	0.55	19.2	31.3	395	10.6	1.03	7.1	95.0	3.0
	1.9	1.0	2.3	500	18.1	12.2	0.67	0.58	20.1	31.0	500	10.7	0.92	7.5	89.0	3.4
	2.8	1.8	4.3	395	17.5	10.8	0.62	0.50	19.2	34.8	395	11.1	1.05	7.5	96.0	3.1
	2.8	1.8	4.3	500	18.2	12.2	0.67	0.53	20.0	34.1	500	11.2	0.93	8.0	90.0	3.5
	3.8	3.3	7.7	395	17.5	10.8	0.62	0.48	19.1	36.2	395	11.3	1.05	7.7	97.0	3.1
	3.8	3.3	7.7	500	18.3	12.2	0.67	0.51	20.1	35.6	500	11.4	0.94	8.2	90.0	3.5
40	1.9	0.8	1.8	395	17.0	10.6	0.62	0.62	19.1	27.3	395	12.2	1.07	8.5	99.0	3.3
	1.9	0.8	1.8	500	17.7	12.0	0.68	0.65	19.9	27.1	500	12.4	0.96	9.1	92.0	3.8
	2.8	1.6	3.6	395	17.2	10.7	0.62	0.57	19.2	30.0	395	12.7	1.08	9.0	100.0	3.4
	2.8	1.6	3.6	500	18.0	12.1	0.67	0.60	20.1	29.8	500	13.0	0.97	9.7	93.0	3.9
	3.8	2.9	6.6	395	17.4	10.8	0.62	0.54	19.3	32.0	395	13.0	1.09	9.3	101.0	3.5
	3.8	2.9	6.6	500	18.1	12.2	0.67	0.57	20.1	31.6	500	13.3	0.97	10.0	94.0	4.0
50	1.9	0.6	1.5	395	16.4	10.4	0.63	0.70	18.8	23.3	395	13.8	1.10	10.0	103.0	3.7
	1.9	0.6	1.5	500	17.1	11.8	0.69	0.73	19.6	23.3	500	14.1	0.99	10.7	95.0	4.2
	2.8	1.4	3.1	395	16.8	10.6	0.63	0.65	19.0	25.7	395	14.4	1.12	10.6	104.0	3.8
	2.8	1.4	3.1	500	17.5	12.0	0.69	0.68	19.8	25.6	500	14.7	1.00	11.3	96.0	4.3
	3.8	2.5	5.8	395	17.0	10.6	0.62	0.62	19.1	27.3	395	14.7	1.12	10.9	105.0	3.8
	3.8	2.5	5.8	500	17.7	12.0	0.68	0.65	19.9	27.1	500	15.1	1.00	11.7	97.0	4.4
60	1.9	0.6	1.3	395	15.7	10.2	0.65	0.78	18.4	20.0	395	15.4	1.14	11.5	106.0	3.9
	1.9	0.6	1.3	500	16.4	11.5	0.70	0.82	19.2	19.9	500	15.7	1.01	12.2	98.0	4.5
	2.8	1.2	2.8	395	16.2	10.4	0.64	0.73	18.7	22.1	395	16.0	1.15	12.1	108.0	4.1
	2.8	1.2	2.8	500	16.9	11.7	0.69	0.76	19.5	22.1	500	16.5	1.03	13.0	99.0	4.7
	3.8	2.3	5.3	395	16.4	10.4	0.63	0.70	18.8	23.3	395	16.5	1.16	12.5	109.0	4.1
	3.8	2.3	5.3	500	17.1	11.8	0.69	0.73	19.6	23.3	500	16.8	1.03	13.3	100.0	4.8
70	1.9	0.5	1.1	395	15.2	10.1	0.66	0.87	18.2	17.4	395	16.9	1.16	12.9	110.0	4.2
	1.9	0.5	1.1	500	15.8	11.4	0.72	0.91	18.9	17.3	500	17.4	1.04	13.8	101.0	4.9
	2.8	1.1	2.5	395	15.5	10.1	0.65	0.82	18.3	18.8	395	17.7	1.18	13.7	112.0	4.4
	2.8	1.1	2.5	500	16.1	11.4	0.71	0.85	19.0	18.9	500	18.2	1.05	14.6	102.0	5.1
	3.8	2.1	4.9	395	15.8	10.2	0.65	0.79	18.5	19.9	395	18.2	1.19	14.1	113.0	4.5
	3.8	2.1	4.9	500	16.4	11.5	0.70	0.82	19.2	19.9	500	18.6	1.06	15.0	103.0	5.1
80	1.9	0.4	1.0	395	14.3	9.8	0.69	0.97	17.6	14.7	395	18.4	1.19	14.3	114.0	4.5
	1.9	0.4	1.0	500	14.9	11.1	0.74	1.01	18.4	14.7	500	18.9	1.06	15.3	104.0	5.2
	2.8	1.0	2.4	395	14.7	9.8	0.67	0.91	17.8	16.1	395	19.2	1.21	15.1	116.0	4.6
	2.8	1.0	2.4	500	15.3	11.1	0.73	0.95	18.6	16.0	500	19.9	1.08	16.2	105.0	5.4
	3.8	2.0	4.6	395	14.9	9.9	0.66	0.88	17.9	16.9	395	19.7	1.21	15.6	117.0	4.8
	3.8	2.0	4.6	500	15.6	11.2	0.72	0.92	18.8	16.9	500	20.3	1.08	16.6	106.0	5.5
85	1.9	0.4	0.9	395	13.8	9.6	0.70	1.04	17.4	13.2	395	19.1	1.20	15.0	116.0	4.7
	1.9	0.4	0.9	500	14.4	10.9	0.76	1.07	18.1	13.4	500	19.7	1.07	16.0	105.0	5.4
	2.8	1.0	2.3	395	14.2	9.7	0.68	0.96	17.5	14.7	395	20.1	1.22	15.9	118.0	4.8
	2.8	1.0	2.3	500	14.8	11.0	0.74	1.01	18.3	14.6	500	20.6	1.09	16.9	107.0	5.5
	3.8	1.9	4.4	395	14.5	9.8	0.68	0.93	17.7	15.5	395	20.5	1.23	16.3	119.0	4.9
	3.8	1.9	4.4	500	15.1	11.1	0.74	0.97	18.4	15.5	500	21.1	1.09	17.4	108.0	5.7
90	1.9	0.4	0.9	395	13.3	9.5	0.71	1.08	17.0	12.3	395	19.9	1.22	15.7	117.0	4.8
	1.9	0.4	0.9	500	13.9	10.7	0.77	1.13	17.8	12.3	500	20.5	1.09	16.8	107.0	5.5
	2.8	1.0	2.2	395	13.7	9.5	0.69	1.02	17.2	13.4	395	20.8	1.23	16.6	120.0	4.9
	2.8	1.0	2.2	500	14.3	10.8	0.76	1.06	17.9	13.4	500	21.5	1.10	17.7	108.0	5.7
	3.8	1.9	4.3	395	14.1	9.6	0.68	0.98	17.5	14.3	395	21.3	1.24	17.1	121.0	5.0
	3.8	1.9	4.3	500	14.6	10.9	0.75	1.02	18.1	14.3	500	22.0	1.11	18.2	109.0	5.8
100	1.9	0.4	0.8	395	12.4	9.2	0.74	1.19	16.5	10.4	Operation not recommended					
	1.9	0.4	0.8	500	12.9	10.4	0.81	1.25	17.2	10.3						
	2.8	0.9	2.1	395	12.8	9.2	0.72	1.13	16.7	11.3						
	2.8	0.9	2.1	500	13.3	10.4	0.78	1.17	17.3	11.3						
	3.8	1.8	4.1	395	13.1	9.3	0.71	1.09	16.8	12.0						
	3.8	1.8	4.1	500	13.6	10.5	0.77	1.14	17.5	11.9						
110	1.9	0.3	0.7	395	11.3	8.8	0.78	1.31	15.8	8.6						
	1.9	0.3	0.7	500	11.8	10.0	0.85	1.37	16.5	8.6						
	2.8	0.8	1.9	395	11.8	8.9	0.75	1.24	16.0	9.5						
	2.8	0.8	1.9	500	12.2	10.0	0.82	1.30	16.6	9.4						
	3.8	1.7	3.9	395	12.1	9.0	0.74	1.21	16.2	10.0						
	3.8	1.7	3.9	500	12.6	10.2	0.81	1.26	16.9	10.0						
120	1.9	0.3	0.7	395	10.3	8.5	0.83	1.44	15.2	7.1						
	1.9	0.3	0.7	500	10.8	9.6	0.89	1.50	15.9	7.2						
	2.8	0.8	1.8	395	10.7	8.5	0.79	1.37	15.4	7.8						
	2.8	0.8	1.8	500	11.2	9.6	0.86	1.42	16.1	7.9						
	3.8	1.6	3.7	395	11.0	8.6	0.78	1.33	15.5	8.2						
	3.8	1.6	3.7	500	11.5	9.8	0.85	1.39	16.3	8.3						

Interpolation is permissible; extrapolation is not.
All entering air conditions are 80°F DB and 67°F WB in cooling, and 70°F DB in heating.
AHRI/ISO certified conditions are 80.6°F DB and 66.2°F WB in cooling and 68°F DB in heating.
Table does not reflect fan or pump power corrections for AHRI/ISO conditions.
All performance is based upon the lower voltage of dual voltage rated units.
Performance stated is at the rated power supply; performance may vary as the power supply varies from the rated.
Operation below 40°F EWT is based upon a 15% methanol antifreeze solution.
Operation below 60°F EWT requires optional insulated water/refrigerant circuit.
See performance correction tables for operating conditions other than those listed above.
See Performance Data Selection Notes for operation in the shaded areas.

ClimateMaster works continually to improve its products. As a result, the design and specifications of each product at the time of order may be changed without notice and may not be as described herein. Please contact ClimateMaster's Customer Service Department at 1-405-745-6000 for specific information on the current design and specifications. Statements and other information contained herein are not express warranties and do not form the basis of any bargain between the parties, but are merely ClimateMaster's opinion or commendation of its products. The latest version of this document is available at **climatemaster.com**.

Performance Data – TC H/V 018 (PSC Blower)

600 CFM Nominal (Rated) Airflow

Performance capacities shown in thousands of Btuh

EWT °F	GPM	WPD		Cooling - EAT 80/67°F							Heating - EAT 70°F					
		PSI	FT	Airflow CFM	TC	SC	Sens/Tot Ratio	kW	HR	EER	Airflow CFM	HC	kW	HE	LAT	COP
20	4.5	7.2	16.7	Operation not recommended							450	11.2	1.25	7.2	93	2.61
	4.5	7.2	16.7								600	11.4	1.13	7.6	88	2.98
30	2.3	2.1	4.9	450	22.1	14.2	0.64	0.72	24.5	30.7	450	12.4	1.29	8.2	96	2.83
	2.3	2.1	4.9	600	23.0	16.1	0.70	0.75	25.5	30.8	600	12.7	1.16	8.8	90	3.22
	3.4	3.4	7.9	450	22.9	14.4	0.63	0.64	25.1	35.8	450	12.9	1.30	8.7	97	2.92
	3.4	3.4	7.9	600	23.9	16.3	0.68	0.67	26.1	35.8	600	13.3	1.17	9.3	90	3.33
	4.5	5.9	13.7	450	23.3	14.4	0.62	0.60	25.3	39.0	450	13.2	1.31	9.0	97	2.97
	4.5	5.9	13.7	600	24.3	16.3	0.67	0.62	26.4	39.0	600	13.5	1.17	9.6	91	3.38
40	2.3	1.7	3.9	450	21.1	13.9	0.66	0.82	23.9	25.6	450	14.3	1.33	9.9	99	3.15
	2.3	1.7	3.9	600	22.0	15.7	0.72	0.86	24.9	25.6	600	14.7	1.20	10.6	93	3.59
	3.4	2.9	6.7	450	21.9	14.2	0.65	0.75	24.4	29.3	450	15.0	1.35	10.5	101	3.26
	3.4	2.9	6.7	600	22.8	16.0	0.70	0.78	25.4	29.3	600	15.3	1.21	11.2	94	3.72
	4.5	5.1	11.8	450	22.5	14.5	0.64	0.71	24.9	31.9	450	15.3	1.35	10.8	102	3.32
	4.5	5.1	11.8	600	23.5	16.4	0.70	0.74	25.9	31.9	600	15.7	1.22	11.6	94	3.78
50	2.3	1.4	3.3	450	20.4	13.7	0.67	0.93	23.5	21.9	450	16.3	1.37	11.7	103	3.47
	2.3	1.4	3.3	600	21.2	15.5	0.73	0.97	24.5	22.0	600	16.6	1.23	12.5	96	3.96
	3.4	2.6	5.9	450	20.8	13.8	0.66	0.85	23.7	24.4	450	17.0	1.39	12.4	105	3.60
	3.4	2.6	5.9	600	21.7	15.6	0.72	0.89	24.7	24.4	600	17.4	1.25	13.2	97	4.10
	4.5	4.6	10.6	450	21.2	13.9	0.66	0.81	23.9	26.1	450	17.4	1.39	12.7	106	3.67
	4.5	4.6	10.6	600	22.1	15.8	0.72	0.85	24.9	26.1	600	17.9	1.25	13.6	98	4.18
60	2.3	1.3	2.9	450	19.3	13.2	0.68	1.04	22.8	18.6	450	18.2	1.41	13.4	107	3.79
	2.3	1.3	2.9	600	20.1	14.9	0.74	1.08	23.8	18.6	600	18.6	1.26	14.3	99	4.32
	3.4	2.3	5.3	450	19.8	13.4	0.68	0.96	23.0	20.6	450	19.1	1.42	14.2	109	3.93
	3.4	2.3	5.3	600	20.6	15.1	0.73	1.00	24.0	20.6	600	19.6	1.28	15.2	100	4.49
	4.5	4.2	9.6	450	20.1	13.5	0.67	0.92	23.3	21.9	450	19.6	1.43	14.7	110	4.01
	4.5	4.2	9.6	600	21.0	15.3	0.73	0.96	24.2	21.9	600	20.1	1.29	15.7	101	4.58
70	2.3	1.1	2.6	450	18.2	12.7	0.69	1.15	22.1	15.8	450	20.2	1.44	15.2	112	4.11
	2.3	1.1	2.6	600	19.0	14.3	0.76	1.20	23.1	15.8	600	20.7	1.29	16.2	102	4.68
	3.4	2.1	4.9	450	18.7	12.8	0.69	1.07	22.3	17.4	450	21.2	1.46	16.1	114	4.27
	3.4	2.1	4.9	600	19.4	14.5	0.75	1.12	23.2	17.4	600	21.7	1.31	17.2	103	4.86
	4.5	3.9	8.9	450	19.1	13.0	0.68	1.03	22.6	18.4	450	21.7	1.46	16.6	115	4.35
	4.5	3.9	8.9	600	19.8	14.7	0.74	1.08	23.5	18.4	600	22.3	1.32	17.8	104	4.96
80	2.3	1.0	2.3	450	17.0	12.1	0.71	1.28	21.4	13.3	450	22.1	1.47	17.0	116	4.41
	2.3	1.0	2.3	600	17.7	13.7	0.77	1.33	22.3	13.3	600	22.7	1.32	18.2	105	5.03
	3.4	2.0	4.5	450	17.5	12.3	0.70	1.20	21.6	14.7	450	23.3	1.49	18.0	118	4.59
	3.4	2.0	4.5	600	18.3	13.9	0.76	1.25	22.5	14.7	600	23.9	1.34	19.3	107	5.23
	4.5	3.6	8.3	450	17.9	12.5	0.69	1.15	21.9	15.5	450	23.9	1.50	18.6	119	4.68
	4.5	3.6	8.3	600	18.7	14.1	0.76	1.20	22.8	15.5	600	24.5	1.35	19.9	108	5.34
85	2.3	1.0	2.2	450	16.4	11.8	0.72	1.35	21.0	12.2	450	23.1	1.49	17.9	118	4.56
	2.3	1.0	2.2	600	17.1	13.3	0.78	1.40	21.9	12.2	600	23.7	1.33	19.1	107	5.20
	3.4	1.9	4.4	450	16.9	12.0	0.71	1.26	21.2	13.5	450	24.3	1.50	19.0	120	4.74
	3.4	1.9	4.4	600	17.6	13.5	0.77	1.31	22.1	13.5	600	24.9	1.35	20.3	108	5.41
	4.5	3.5	8.1	450	17.3	12.2	0.70	1.22	21.5	14.3	450	25.0	1.51	19.6	121	4.84
	4.5	3.5	8.1	600	18.0	13.8	0.76	1.27	22.4	14.3	600	25.6	1.36	20.9	110	5.51
90	2.3	0.9	2.1	450	15.8	11.5	0.73	1.42	20.6	11.1	450	24.1	1.50	18.8	120	4.71
	2.3	0.9	2.1	600	16.4	13.0	0.79	1.48	21.5	11.1	600	24.7	1.35	20.1	108	5.37
	3.4	1.8	4.2	450	16.3	11.7	0.71	1.33	20.8	12.3	450	25.4	1.52	20.0	122	4.89
	3.4	1.8	4.2	600	17.0	13.2	0.78	1.38	21.7	12.3	600	26.0	1.37	21.3	110	5.58
	4.5	3.4	7.9	450	16.7	11.9	0.71	1.28	21.1	13.0	450	26.1	1.53	20.6	124	4.99
	4.5	3.4	7.9	600	17.4	13.4	0.77	1.34	22.0	13.0	600	26.7	1.38	22.0	111	5.69
100	2.3	0.9	2.0	450	14.4	10.8	0.75	1.57	19.8	9.2	Operation not recommended					
	2.3	0.9	2.0	600	15.0	12.2	0.82	1.63	20.6	9.2						
	3.4	1.7	4.0	450	15.0	11.0	0.74	1.48	20.0	10.1						
	3.4	1.7	4.0	600	15.6	12.5	0.80	1.54	20.8	10.1						
	4.5	3.2	7.4	450	15.4	11.2	0.73	1.43	20.3	10.8						
	4.5	3.2	7.4	600	16.0	12.7	0.79	1.49	21.1	10.8						
110	2.3	0.8	1.8	450	12.9	10.1	0.78	1.74	18.8	7.4						
	2.3	0.8	1.8	600	13.4	11.4	0.85	1.81	19.6	7.4						
	3.4	1.6	3.8	450	13.5	10.3	0.76	1.64	19.1	8.2						
	3.4	1.6	3.8	600	14.0	11.6	0.83	1.71	19.9	8.2						
	4.5	3.1	7.1	450	13.9	10.5	0.75	1.59	19.4	8.8						
	4.5	3.1	7.1	600	14.5	11.9	0.82	1.65	20.2	8.8						
120	2.3	0.7	1.7	450	11.2	9.2	0.82	1.92	17.8	5.8						
	2.3	0.7	1.7	600	11.6	10.4	0.89	2.00	18.5	5.8						
	3.4	1.6	3.6	450	11.8	9.5	0.80	1.82	18.1	6.5						
	3.4	1.6	3.6	600	12.3	10.7	0.87	1.89	18.8	6.5						
	4.5	2.9	6.8	450	12.3	9.7	0.79	1.77	18.4	7.0						
	4.5	2.9	6.8	600	12.8	11.0	0.86	1.84	19.1	7.0						

Interpolation is permissible; extrapolation is not.
All entering air conditions are 80°F DB and 67°F WB in cooling, and 70°F DB in heating.
AHRI/ISO certified conditions are 80.6°F DB and 66.2°F WB in cooling and 68°F DB in heating.
Table does not reflect fan or pump power corrections for AHRI/ISO conditions.
All performance is based upon the lower voltage of dual voltage rated units.
Performance stated is at the rated power supply; performance may vary as the power supply varies from the rated.
Operation below 40°F EWT is based upon a 15% methanol antifreeze solution.
Operation below 60°F EWT requires optional insulated water/refrigerant circuit.
See performance correction tables for operating conditions other than those listed above.
See Performance Data Selection Notes for operation in the shaded areas.

ClimateMaster works continually to improve its products. As a result, the design and specifications of each product at the time of order may be changed without notice and may not be as described herein. Please contact ClimateMaster's Customer Service Department at 1-405-745-6000 for specific information on the current design and specifications. Statements and other information contained herein are not express warranties and do not form the basis of any bargain between the parties, but are merely ClimateMaster's opinion or commendation of its products. The latest version of this document is available at **climatemaster.com**.

Performance Data – TC H/V 018 (ECM Blower)

600 CFM Nominal (Rated) Airflow

Performance capacities shown in thousands of Btuh

EWT °F	GPM	WPD		Cooling - EAT 80/67°F							Heating - EAT 70°F					
		PSI	FT	Airflow CFM	TC	SC	Sens/Tot Ratio	kW	HR	EER	Airflow CFM	HC	kW	HE	LAT	COP
20	4.5	7.2	16.7	Operation not recommended							450	11.3	1.20	7.2	92.0	2.8
	4.5	7.2	16.7								600	11.2	1.10	7.6	87.0	3.1
30	2.3	2.1	4.9	450	22.1	14.2	0.64	0.66	24.3	33.5	450	12.4	1.20	8.2	95.0	3.0
	2.3	2.1	4.9	600	23.0	16.1	0.70	0.69	25.4	33.4	600	12.5	1.10	8.8	89.0	3.3
	3.4	3.4	7.9	450	22.9	14.4	0.63	0.58	24.9	39.6	450	12.9	1.20	8.7	96.0	3.1
	3.4	3.4	7.9	600	23.9	16.3	0.68	0.61	26.0	39.2	600	13.1	1.10	9.3	90.0	3.5
	4.5	5.9	13.7	450	23.3	14.4	0.62	0.54	25.1	43.2	450	13.3	1.20	9.0	97.0	3.1
	4.5	5.9	13.7	600	24.3	16.3	0.67	0.56	26.2	43.5	600	13.4	1.10	9.6	90.0	3.5
40	2.3	1.7	3.9	450	21.1	13.9	0.66	0.76	23.7	27.8	450	14.2	1.30	9.9	99.0	3.3
	2.3	1.7	3.9	600	22.0	15.7	0.71	0.80	24.7	27.5	600	14.5	1.10	10.6	92.0	3.7
	3.4	2.9	6.7	450	21.9	14.2	0.65	0.69	24.3	31.8	450	14.9	1.30	10.5	100.0	3.4
	3.4	2.9	6.7	600	22.8	16.0	0.70	0.72	25.3	31.7	600	15.1	1.10	11.2	93.0	3.9
	4.5	5.1	11.8	450	22.5	14.5	0.64	0.65	24.7	34.7	450	15.2	1.30	10.8	101.0	3.5
	4.5	5.1	11.8	600	23.5	16.4	0.70	0.68	25.8	34.6	600	15.6	1.20	11.6	94.0	3.9
50	2.3	1.4	3.3	450	20.4	13.7	0.67	0.87	23.4	23.5	450	16.2	1.30	11.7	103.0	3.6
	2.3	1.4	3.3	600	21.2	15.5	0.73	0.91	24.3	23.3	600	16.5	1.20	12.5	95.0	4.1
	3.4	2.6	5.9	450	20.8	13.8	0.66	0.79	23.5	26.4	450	16.9	1.30	12.4	104.0	3.7
	3.4	2.6	5.9	600	21.7	15.6	0.72	0.83	24.5	26.2	600	17.3	1.20	13.2	96.0	4.3
	4.5	4.6	10.6	450	21.2	13.9	0.66	0.75	23.8	28.3	450	17.2	1.30	12.7	105.0	3.8
	4.5	4.6	10.6	600	22.1	15.8	0.71	0.79	24.8	28.0	600	17.7	1.20	13.6	97.0	4.4
60	2.3	1.3	2.9	450	19.3	13.2	0.68	0.98	22.6	19.7	450	18.0	1.30	13.4	106.0	3.9
	2.3	1.3	2.9	600	20.1	14.9	0.74	1.02	23.6	19.7	600	18.4	1.20	14.3	98.0	4.5
	3.4	2.3	5.3	450	19.8	13.4	0.68	0.90	22.9	22.0	450	18.8	1.40	14.2	108.0	4.1
	3.4	2.3	5.3	600	20.6	15.1	0.73	0.94	23.8	21.9	600	19.4	1.20	15.2	99.0	4.7
	4.5	4.2	9.6	450	20.1	13.5	0.67	0.86	23.0	23.4	450	19.4	1.40	14.7	109.0	4.1
	4.5	4.2	9.6	600	21.0	15.3	0.73	0.90	24.1	23.4	600	19.9	1.20	15.7	100.0	4.7
70	2.3	1.1	2.6	450	18.2	12.7	0.70	1.09	21.9	16.7	450	19.9	1.40	15.2	110.0	4.2
	2.3	1.1	2.6	600	19.0	14.3	0.75	1.14	22.9	16.7	600	20.4	1.20	16.2	101.0	4.9
	3.4	2.1	4.9	450	18.7	12.8	0.68	1.01	22.1	18.5	450	20.9	1.40	16.1	112.0	4.4
	3.4	2.1	4.9	600	19.4	14.5	0.75	1.06	23.0	18.3	600	21.5	1.20	17.2	102.0	5.0
	4.5	3.9	8.9	450	19.1	13.0	0.68	0.97	22.4	19.7	450	21.4	1.40	16.6	113.0	4.5
	4.5	3.9	8.9	600	19.8	14.7	0.74	1.02	23.3	19.4	600	22.1	1.30	17.8	103.0	5.1
80	2.3	1.0	2.3	450	17.0	12.1	0.71	1.22	21.2	13.9	450	21.8	1.40	17.0	114.0	4.5
	2.3	1.0	2.3	600	17.7	13.7	0.77	1.27	22.0	13.9	600	22.5	1.30	18.2	104.0	5.2
	3.4	2.0	4.5	450	17.5	12.3	0.70	1.14	21.4	15.4	450	22.9	1.40	18.0	116.0	4.7
	3.4	2.0	4.5	600	18.3	13.9	0.76	1.19	22.4	15.4	600	23.7	1.30	19.3	105.0	5.4
	4.5	3.6	8.3	450	17.9	12.5	0.70	1.09	21.6	16.4	450	23.5	1.40	18.6	117.0	4.8
	4.5	3.6	8.3	600	18.7	14.1	0.75	1.14	22.6	16.4	600	24.3	1.30	19.9	106.0	5.5
85	2.3	1.0	2.2	450	16.4	11.8	0.72	1.29	20.8	12.7	450	22.8	1.40	17.9	116.0	4.7
	2.3	1.0	2.2	600	17.1	13.3	0.78	1.34	21.7	12.8	600	23.4	1.30	19.1	105.0	5.4
	3.4	1.9	4.4	450	16.9	12.0	0.71	1.20	21.0	14.1	450	23.9	1.40	19.0	118.0	4.9
	3.4	1.9	4.4	600	17.6	13.5	0.77	1.25	21.9	14.1	600	24.7	1.30	20.3	107.0	5.6
	4.5	3.5	8.1	450	17.3	12.2	0.71	1.16	21.3	14.9	450	24.5	1.40	19.6	119.0	5.0
	4.5	3.5	8.1	600	18.0	13.8	0.77	1.21	22.1	14.9	600	25.3	1.30	20.9	108.0	5.7
90	2.3	0.9	2.1	450	15.8	11.5	0.73	1.36	20.4	11.6	450	23.7	1.40	18.8	117.0	4.8
	2.3	0.9	2.1	600	16.4	13.0	0.79	1.42	21.2	11.6	600	24.5	1.30	20.1	107.0	5.6
	3.4	1.8	4.2	450	16.3	11.7	0.72	1.27	20.6	12.8	450	25.0	1.50	20.0	120.0	5.0
	3.4	1.8	4.2	600	17.0	13.2	0.78	1.32	21.5	12.9	600	25.8	1.30	21.3	108.0	5.8
	4.5	3.4	7.9	450	16.7	11.9	0.71	1.22	20.9	13.7	450	25.6	1.50	20.6	121.0	5.1
	4.5	3.4	7.9	600	17.4	13.4	0.77	1.28	21.8	13.6	600	26.5	1.30	22.0	109.0	5.9
100	2.3	0.9	2.0	450	14.4	10.8	0.75	1.51	19.5	9.5	Operation not recommended					
	2.3	0.9	2.0	600	15.0	12.2	0.81	1.57	20.4	9.6						
	3.4	1.7	4.0	450	15.0	11.0	0.73	1.42	19.8	10.6						
	3.4	1.7	4.0	600	15.6	12.5	0.80	1.48	20.6	10.5						
	4.5	3.2	7.4	450	15.4	11.2	0.73	1.37	20.1	11.2						
	4.5	3.2	7.4	600	16.0	12.7	0.79	1.43	20.9	11.2						
110	2.3	0.8	1.8	450	12.9	10.1	0.78	1.68	18.6	7.7						
	2.3	0.8	1.8	600	13.4	11.4	0.85	1.75	19.4	7.7						
	3.4	1.6	3.8	450	13.5	10.3	0.76	1.58	18.9	8.5						
	3.4	1.6	3.8	600	14.0	11.6	0.83	1.65	19.6	8.5						
	4.5	3.1	7.1	450	13.9	10.5	0.76	1.53	19.1	9.1						
	4.5	3.1	7.1	600	14.5	11.9	0.82	1.59	19.9	9.1						
120	2.3	0.7	1.7	450	11.2	9.2	0.82	1.86	17.5	6.0						
	2.3	0.7	1.7	600	11.6	10.4	0.90	1.94	18.2	6.0						
	3.4	1.6	3.6	450	11.8	9.5	0.81	1.76	17.8	6.7						
	3.4	1.6	3.6	600	12.3	10.7	0.87	1.83	18.5	6.7						
	4.5	2.9	6.8	450	12.3	9.7	0.79	1.71	18.1	7.2						
	4.5	2.9	6.8	600	12.8	11.0	0.86	1.78	18.9	7.2						

Interpolation is permissible; extrapolation is not.
All entering air conditions are 80°F DB and 67°F WB in cooling, and 70°F DB in heating.
AHRI/ISO certified conditions are 80.6°F DB and 66.2°F WB in cooling and 68°F DB in heating.
Table does not reflect fan or pump power corrections for AHRI/ISO conditions.
All performance is based upon the lower voltage of dual voltage rated units.
Performance stated is at the rated power supply; performance may vary as the power supply varies from the rated.
Operation below 40°F EWT is based upon a 15% methanol antifreeze solution.
Operation below 60°F EWT requires optional insulated water/refrigerant circuit.
See performance correction tables for operating conditions other than those listed above.
See Performance Data Selection Notes for operation in the shaded areas.

ClimateMaster works continually to improve its products. As a result, the design and specifications of each product at the time of order may be changed without notice and may not be as described herein. Please contact ClimateMaster's Customer Service Department at 1-405-745-6000 for specific information on the current design and specifications. Statements and other information contained herein are not express warranties and do not form the basis of any bargain between the parties, but are merely ClimateMaster's opinion or commendation of its products. The latest version of this document is available at **climatemaster.com**.

Performance Data – TC H/V 024 (PSC Blower)

850 CFM Nominal (Rated) Airflow

Performance capacities shown in thousands of Btuh

EWT °F	GPM	WPD		Cooling - EAT 80/67°F							Heating - EAT 70°F					
		PSI	FT	Airflow CFM	TC	SC	Sens/Tot Ratio	kW	HR	EER	Airflow CFM	HC	kW	HE	LAT	COP
20	6.0	8.5	19.6	Operation not recommended							640	15.5	1.91	9.5	92	2.39
	6.0	8.5	19.6								850	15.9	1.71	10.1	87	2.72
30	3.0	2.2	5.2	640	27.7	17.4	0.63	1.12	31.5	24.8	640	17.2	1.93	11.0	95	2.61
	3.0	2.2	5.2	850	28.9	19.7	0.68	1.16	32.8	24.8	850	17.6	1.74	11.8	89	2.98
	4.5	4.0	9.3	640	28.2	17.5	0.62	1.05	31.8	26.9	640	18.0	1.95	11.7	96	2.70
	4.5	4.0	9.3	850	29.4	19.8	0.67	1.09	33.1	26.9	850	18.4	1.75	12.5	90	3.08
	6.0	7.2	16.7	640	28.5	17.5	0.62	1.02	31.9	28.0	640	18.4	1.95	12.1	97	2.76
	6.0	7.2	16.7	850	29.6	19.8	0.67	1.06	33.2	28.0	850	18.8	1.76	12.9	91	3.14
40	3.0	1.9	4.4	640	26.9	17.1	0.64	1.23	31.1	21.9	640	19.9	1.98	13.4	99	2.94
	3.0	1.9	4.4	850	28.0	19.4	0.69	1.28	32.4	21.9	850	20.4	1.78	14.4	92	3.36
	4.5	3.6	8.2	640	27.5	17.3	0.63	1.15	31.4	24.0	640	20.8	2.00	14.3	100	3.06
	4.5	3.6	8.2	850	28.7	19.6	0.68	1.19	32.7	24.0	850	21.3	1.79	15.3	93	3.49
	6.0	6.4	14.9	640	27.8	17.4	0.63	1.11	31.5	25.1	640	21.3	2.01	14.7	101	3.12
	6.0	6.4	14.9	850	28.9	19.7	0.68	1.16	32.8	25.1	850	21.9	1.80	15.7	94	3.55
50	3.0	1.7	3.9	640	26.2	16.9	0.65	1.36	30.8	19.3	640	22.6	2.03	15.9	103	3.27
	3.0	1.7	3.9	850	27.3	19.1	0.70	1.42	32.1	19.3	850	23.2	1.82	17.0	95	3.72
	4.5	3.2	7.4	640	26.7	17.0	0.64	1.26	31.0	21.1	640	23.7	2.05	16.9	104	3.39
	4.5	3.2	7.4	850	27.8	19.3	0.69	1.32	32.2	21.1	850	24.3	1.84	18.0	96	3.87
	6.0	5.9	13.6	640	27.0	17.1	0.64	1.22	31.1	22.1	640	24.3	2.06	17.4	105	3.46
	6.0	5.9	13.6	850	28.1	19.4	0.69	1.27	32.4	22.1	850	24.9	1.85	18.6	97	3.94
60	3.0	1.5	3.5	640	25.3	16.6	0.66	1.52	30.4	16.7	640	25.3	2.08	18.3	107	3.57
	3.0	1.5	3.5	850	26.3	18.8	0.71	1.58	31.7	16.7	850	25.9	1.87	19.6	98	4.07
	4.5	3.0	6.9	640	25.7	16.7	0.65	1.40	30.5	18.3	640	26.6	2.10	19.4	108	3.70
	4.5	3.0	6.9	850	26.8	18.9	0.70	1.46	31.7	18.3	850	27.2	1.89	20.7	100	4.22
	6.0	5.5	12.6	640	26.1	16.8	0.64	1.35	30.6	19.3	640	27.2	2.12	20.0	109	3.77
	6.0	5.5	12.6	850	27.1	19.0	0.70	1.41	31.9	19.3	850	27.9	1.90	21.4	100	4.30
70	3.0	1.4	3.2	640	24.1	16.2	0.67	1.70	29.9	14.2	640	27.9	2.13	20.7	110	3.84
	3.0	1.4	3.2	850	25.1	18.3	0.73	1.77	31.1	14.2	850	28.6	1.91	22.1	101	4.38
	4.5	2.8	6.4	640	24.6	16.3	0.66	1.57	30.0	15.7	640	29.2	2.16	21.8	112	3.97
	4.5	2.8	6.4	850	25.6	18.4	0.72	1.63	31.2	15.7	850	29.9	1.94	23.3	103	4.53
	6.0	5.2	11.9	640	25.0	16.4	0.66	1.51	30.1	16.6	640	29.9	2.17	22.5	113	4.04
	6.0	5.2	11.9	850	26.0	18.6	0.71	1.57	31.4	16.6	850	30.6	1.95	24.0	103	4.60
80	3.0	1.3	3.0	640	22.9	15.7	0.69	1.91	29.4	12.0	640	30.4	2.18	22.9	114	4.08
	3.0	1.3	3.0	850	23.8	17.8	0.75	1.99	30.6	12.0	850	31.1	1.96	24.4	104	4.65
	4.5	2.6	6.1	640	23.4	15.8	0.67	1.76	29.4	13.3	640	31.7	2.21	24.0	116	4.20
	4.5	2.6	6.1	850	24.4	17.9	0.73	1.84	30.7	13.3	850	32.5	1.99	25.7	105	4.79
	6.0	4.9	11.3	640	23.8	16.0	0.67	1.70	29.6	14.1	640	32.4	2.23	24.6	117	4.26
	6.0	4.9	11.3	850	24.8	18.1	0.73	1.77	30.8	14.1	850	33.1	2.00	26.3	106	4.85
85	3.0	1.3	2.9	640	22.2	15.5	0.70	2.03	29.2	11.0	640	31.5	2.21	23.8	116	4.18
	3.0	1.3	2.9	850	23.1	17.5	0.76	2.12	30.4	11.0	850	32.3	1.98	25.5	105	4.77
	4.5	2.6	5.9	640	22.8	15.6	0.68	1.88	29.2	12.2	640	32.7	2.24	25.0	117	4.29
	4.5	2.6	5.9	850	23.7	17.6	0.74	1.95	30.4	12.2	850	33.5	2.01	26.7	107	4.89
	6.0	4.8	11.0	640	23.2	15.7	0.68	1.80	29.3	12.9	640	33.4	2.25	25.5	118	4.34
	6.0	4.8	11.0	850	24.1	17.8	0.74	1.88	30.5	12.9	850	34.2	2.02	27.2	107	4.95
90	3.0	1.2	2.8	640	21.6	15.3	0.71	2.16	28.9	10.0	640	32.6	2.23	24.8	117	4.28
	3.0	1.2	2.8	850	22.4	17.3	0.77	2.25	30.1	10.0	850	33.4	2.01	26.5	106	4.88
	4.5	2.5	5.8	640	22.2	15.4	0.69	1.99	29.0	11.1	640	33.8	2.26	25.9	119	4.38
	4.5	2.5	5.8	850	23.1	17.4	0.75	2.07	30.1	11.1	850	34.6	2.03	27.6	108	4.99
	6.0	4.7	10.7	640	22.5	15.4	0.69	1.91	29.0	11.8	640	34.4	2.28	26.4	120	4.42
	6.0	4.7	10.7	850	23.4	17.5	0.75	1.99	30.2	11.8	850	35.2	2.05	28.2	108	5.04
100	3.0	1.2	2.7	640	20.2	14.8	0.74	2.44	28.5	8.3	Operation not recommended					
	3.0	1.2	2.7	850	21.0	16.8	0.80	2.54	29.7	8.3						
	4.5	2.4	5.5	640	20.8	14.9	0.72	2.25	28.5	9.2						
	4.5	2.4	5.5	850	21.6	16.9	0.78	2.34	29.7	9.2						
	6.0	4.5	10.3	640	21.1	15.0	0.71	2.16	28.5	9.8						
	6.0	4.5	10.3	850	22.0	17.0	0.77	2.25	29.7	9.8						
110	3.0	1.1	2.5	640	18.8	14.4	0.77	2.77	28.3	6.8						
	3.0	1.1	2.5	850	19.5	16.3	0.84	2.88	29.4	6.8						
	4.5	2.3	5.3	640	19.3	14.4	0.75	2.55	28.1	7.6						
	4.5	2.3	5.3	850	20.1	16.3	0.81	2.66	29.2	7.6						
	6.0	4.3	9.9	640	19.7	14.5	0.74	2.45	28.1	8.0						
	6.0	4.3	9.9	850	20.5	16.4	0.80	2.55	29.3	8.0						
120	3.0	1.0	2.4	640	17.1	13.9	0.81	3.13	27.9	5.5						
	3.0	1.0	2.4	850	17.8	15.7	0.88	3.26	29.0	5.5						
	4.5	2.2	5.1	640	17.8	14.0	0.78	2.89	27.8	6.2						
	4.5	2.2	5.1	850	18.6	15.8	0.85	3.01	28.9	6.2						
	6.0	4.2	9.6	640	18.3	14.1	0.77	2.78	27.9	6.6						
	6.0	4.2	9.6	850	19.1	16.0	0.84	2.89	29.0	6.6						

Interpolation is permissible; extrapolation is not.
All entering air conditions are 80°F DB and 67°F WB in cooling, and 70°F DB in heating.
AHRI/ISO certified conditions are 80.6°F DB and 66.2°F WB in cooling and 68°F DB in heating.
Table does not reflect fan or pump power corrections for AHRI/ISO conditions.
All performance is based upon the lower voltage of dual voltage rated units.
Performance stated is at the rated power supply; performance may vary as the power supply varies from the rated.
Operation below 40°F EWT is based upon a 15% methanol antifreeze solution.
Operation below 60°F EWT requires optional insulated water/refrigerant circuit.
See performance correction tables for operating conditions other than those listed above.
See Performance Data Selection Notes for operation in the shaded areas.

ClimateMaster works continually to improve its products. As a result, the design and specifications of each product at the time of order may be changed without notice and may not be as described herein. Please contact ClimateMaster's Customer Service Department at 1-405-745-6000 for specific information on the current design and specifications. Statements and other information contained herein are not express warranties and do not form the basis of any bargain between the parties, but are merely ClimateMaster's opinion or commendation of its products. The latest version of this document is available at **climatemaster.com**.

Performance Data – TC H/V 024 (ECM Blower)

800 CFM Nominal (Rated) Airflow

Performance capacities shown in thousands of Btuh

EWT °F	GPM	WPD		Cooling - EAT 80/67°F							Heating - EAT 70°F					
		PSI	FT	Airflow CFM	TC	SC	Sens/Tot Ratio	kW	HR	EER	Airflow CFM	HC	kW	HE	LAT	COP
20	6.0	8.5	19.6	Operation not recommended							640	15.9	1.87	9.5	92.0	2.5
	6.0	8.5	19.6								800	15.8	1.67	10.1	87.0	2.8
30	3.0	2.2	5.2	640	27.7	17.4	0.63	1.08	31.4	25.6	640	17.5	1.89	11.0	95.0	2.7
	3.0	2.2	5.2	800	28.9	19.7	0.68	1.12	32.7	25.8	800	17.6	1.70	11.8	89.0	3.0
	4.5	4.0	9.3	640	28.2	17.5	0.62	1.01	31.7	27.9	640	18.2	1.91	11.7	96.0	2.8
	4.5	4.0	9.3	800	29.4	19.8	0.67	1.05	33.0	28.0	800	18.3	1.71	12.5	90.0	3.1
	6.0	7.2	16.7	640	28.5	17.5	0.61	0.98	31.8	29.0	640	18.6	1.91	12.1	97.0	2.9
	6.0	7.2	16.7	800	29.6	19.8	0.67	1.02	33.1	29.0	800	18.8	1.72	12.9	90.0	3.2
40	3.0	1.9	4.4	640	26.9	17.1	0.64	1.19	31.0	22.6	640	20.0	1.94	13.4	99.0	3.0
	3.0	1.9	4.4	800	28.0	19.4	0.69	1.24	32.2	22.6	800	20.3	1.74	14.4	92.0	3.4
	4.5	3.6	8.2	640	27.5	17.3	0.63	1.11	31.3	24.7	640	21.0	1.96	14.3	100.0	3.1
	4.5	3.6	8.2	800	28.7	19.6	0.68	1.15	32.6	24.9	800	21.3	1.75	15.3	93.0	3.6
	6.0	6.4	14.9	640	27.8	17.4	0.63	1.07	31.5	25.9	640	21.4	1.97	14.7	101.0	3.2
	6.0	6.4	14.9	800	28.9	19.7	0.68	1.12	32.7	25.8	800	21.7	1.76	15.7	94.0	3.6
50	3.0	1.7	3.9	640	26.2	16.9	0.65	1.32	30.7	19.8	640	22.7	1.99	15.9	103.0	3.3
	3.0	1.7	3.9	800	27.3	19.1	0.70	1.38	32.0	19.8	800	23.1	1.78	17.0	95.0	3.8
	4.5	3.2	7.4	640	26.7	17.0	0.64	1.22	30.9	21.9	640	23.8	2.01	16.9	104.0	3.5
	4.5	3.2	7.4	800	27.8	19.3	0.69	1.28	32.2	21.7	800	24.1	1.80	18.0	96.0	3.9
	6.0	5.9	13.6	640	27.0	17.1	0.63	1.18	31.0	22.9	640	24.3	2.02	17.4	105.0	3.5
	6.0	5.9	13.6	800	28.1	19.4	0.69	1.23	32.3	22.8	800	24.8	1.81	18.6	97.0	4.0
60	3.0	1.5	3.5	640	25.3	16.6	0.66	1.48	30.4	17.1	640	25.3	2.04	18.3	106.0	3.6
	3.0	1.5	3.5	800	26.3	18.8	0.71	1.54	31.6	17.1	800	25.8	1.83	19.6	98.0	4.1
	4.5	3.0	6.9	640	25.7	16.7	0.65	1.36	30.3	18.9	640	26.4	2.06	19.4	108.0	3.8
	4.5	3.0	6.9	800	26.8	18.9	0.71	1.42	31.6	18.9	800	27.0	1.85	20.7	99.0	4.3
	6.0	5.5	12.6	640	26.1	16.8	0.64	1.31	30.6	19.9	640	27.1	2.08	20.0	109.0	3.8
	6.0	5.5	12.6	800	27.1	19.0	0.70	1.37	31.8	19.8	800	27.8	1.86	21.4	100.0	4.4
70	3.0	1.4	3.2	640	24.1	16.2	0.67	1.66	29.8	14.5	640	27.8	2.09	20.7	110.0	3.9
	3.0	1.4	3.2	800	25.1	18.3	0.73	1.73	31.0	14.5	800	28.5	1.87	22.1	101.0	4.5
	4.5	2.8	6.4	640	24.6	16.3	0.66	1.53	29.8	16.1	640	29.0	2.12	21.8	112.0	4.0
	4.5	2.8	6.4	800	25.6	18.4	0.72	1.59	31.0	16.1	800	29.8	1.90	23.3	102.0	4.6
	6.0	5.2	11.9	640	25.0	16.4	0.66	1.47	30.0	17.0	640	29.8	2.13	22.5	113.0	4.1
	6.0	5.2	11.9	800	26.0	18.6	0.72	1.53	31.2	17.0	800	30.5	1.91	24.0	103.0	4.7
80	3.0	1.3	3.0	640	22.9	15.7	0.69	1.87	29.3	12.2	640	30.2	2.14	22.9	114.0	4.1
	3.0	1.3	3.0	800	23.8	17.8	0.75	1.95	30.5	12.2	800	31.0	1.92	24.4	104.0	4.7
	4.5	2.6	6.1	640	23.4	15.8	0.68	1.72	29.3	13.6	640	31.4	2.17	24.0	116.0	4.2
	4.5	2.6	6.1	800	24.4	17.9	0.73	1.80	30.5	13.5	800	32.4	1.95	25.7	105.0	4.9
	6.0	4.9	11.3	640	23.8	16.0	0.67	1.66	29.5	14.3	640	32.1	2.19	24.6	117.0	4.3
	6.0	4.9	11.3	800	24.8	18.1	0.73	1.73	30.7	14.3	800	33.0	1.96	26.3	106.0	4.9
85	3.0	1.3	2.9	640	22.2	15.5	0.70	1.99	29.0	11.1	640	31.2	2.17	23.8	116.0	4.2
	3.0	1.3	2.9	800	23.1	17.5	0.76	2.08	30.2	11.1	800	32.1	1.94	25.5	105.0	4.8
	4.5	2.6	5.9	640	22.8	15.6	0.68	1.84	29.1	12.4	640	32.5	2.20	25.0	118.0	4.3
	4.5	2.6	5.9	800	23.7	17.6	0.74	1.91	30.2	12.4	800	33.4	1.97	26.7	107.0	5.0
	6.0	4.8	11.0	640	23.2	15.7	0.68	1.76	29.2	13.2	640	33.0	2.21	25.5	119.0	4.4
	6.0	4.8	11.0	800	24.1	17.8	0.74	1.84	30.4	13.1	800	34.0	1.98	27.2	108.0	5.0
90	3.0	1.2	2.8	640	21.6	15.3	0.71	2.12	28.8	10.2	640	32.3	2.19	24.8	117.0	4.3
	3.0	1.2	2.8	800	22.4	17.3	0.77	2.21	29.9	10.1	800	33.2	1.97	26.5	107.0	4.9
	4.5	2.5	5.8	640	22.2	15.4	0.69	1.95	28.9	11.4	640	33.5	2.22	25.9	120.0	4.4
	4.5	2.5	5.8	800	23.1	17.4	0.75	2.03	30.0	11.4	800	34.4	1.99	27.6	108.0	5.1
	6.0	4.7	10.7	640	22.5	15.4	0.68	1.87	28.9	12.0	640	34.0	2.24	26.4	121.0	4.5
	6.0	4.7	10.7	800	23.4	17.5	0.75	1.95	30.1	12.0	800	35.1	2.01	28.2	109.0	5.1
100	3.0	1.2	2.7	640	20.2	14.8	0.73	2.40	28.4	8.4	Operation not recommended					
	3.0	1.2	2.7	800	21.0	16.8	0.80	2.50	29.5	8.4						
	4.5	2.4	5.5	640	20.8	14.9	0.72	2.21	28.3	9.4						
	4.5	2.4	5.5	800	21.6	16.9	0.78	2.30	29.5	9.4						
	6.0	4.5	10.3	640	21.1	15.0	0.71	2.12	28.3	9.9						
	6.0	4.5	10.3	800	22.0	17.0	0.77	2.21	29.5	9.9						
110	3.0	1.1	2.5	640	18.8	14.4	0.77	2.73	28.1	6.9						
	3.0	1.1	2.5	800	19.5	16.3	0.84	2.84	29.2	6.9						
	4.5	2.3	5.3	640	19.3	14.4	0.75	2.51	27.9	7.7						
	4.5	2.3	5.3	800	20.1	16.3	0.81	2.62	29.0	7.7						
	6.0	4.3	9.9	640	19.7	14.5	0.74	2.41	27.9	8.2						
	6.0	4.3	9.9	800	20.5	16.4	0.80	2.51	29.1	8.2						
120	3.0	1.0	2.4	640	17.1	13.9	0.81	3.09	27.6	5.5						
	3.0	1.0	2.4	800	17.8	15.7	0.88	3.22	28.8	5.5						
	4.5	2.2	5.1	640	17.8	14.0	0.79	2.85	27.5	6.2						
	4.5	2.2	5.1	800	18.6	15.8	0.85	2.97	28.7	6.3						
	6.0	4.2	9.6	640	18.3	14.1	0.77	2.74	27.7	6.7						
	6.0	4.2	9.6	800	19.1	16.0	0.84	2.85	28.8	6.7						

Interpolation is permissible; extrapolation is not.
All entering air conditions are 80°F DB and 67°F WB in cooling, and 70°F DB in heating.
AHRI/ISO certified conditions are 80.6°F DB and 66.2°F WB in cooling and 68°F DB in heating.
Table does not reflect fan or pump power corrections for AHRI/ISO conditions.
All performance is based upon the lower voltage of dual voltage rated units.
Performance stated is at the rated power supply; performance may vary as the power supply varies from the rated.
Operation below 40°F EWT is based upon a 15% methanol antifreeze solution.
Operation below 60°F EWT requires optional insulated water/refrigerant circuit.
See performance correction tables for operating conditions other than those listed above.
See Performance Data Selection Notes for operation in the shaded areas.

ClimateMaster works continually to improve its products. As a result, the design and specifications of each product at the time of order may be changed without notice and may not be as described herein. Please contact ClimateMaster's Customer Service Department at 1-405-745-6000 for specific information on the current design and specifications. Statements and other information contained herein are not express warranties and do not form the basis of any bargain between the parties, but are merely ClimateMaster's opinion or commendation of its products. The latest version of this document is available at **climatemaster.com**.

Performance Data – TC H/V 030 (PSC Blower)

1,000 CFM Nominal (Rated) Airflow

Performance capacities shown in thousands of Btuh

EWT °F	GPM	WPD		Cooling - EAT 80/67°F							Heating - EAT 70°F					
		PSI	FT	Airflow CFM	TC	SC	Sens/Tot Ratio	kW	HR	EER	Airflow CFM	HC	kW	HE	LAT	COP
20	7.5	5.0	11.6	Operation not recommended							750	20.0	2.31	12.6	95	2.53
	7.5	5.0	11.6								1000	20.4	2.08	13.4	89	2.89
30	3.8	1.3	2.9	750	33.3	20.3	0.61	1.38	38.0	24.0	750	21.6	2.37	14.0	97	2.67
	3.8	1.3	2.9	1000	34.7	22.9	0.66	1.44	39.5	24.0	1000	22.1	2.13	14.9	90	3.04
	5.6	2.3	5.4	750	33.5	20.2	0.60	1.31	37.9	25.7	750	22.5	2.40	14.7	98	2.75
	5.6	2.3	5.4	1000	34.9	22.8	0.65	1.36	39.5	25.7	1000	23.0	2.15	15.7	91	3.13
	7.5	4.2	9.7	750	33.6	20.0	0.60	1.27	37.9	26.5	750	22.9	2.41	15.1	98	2.79
	7.5	4.2	9.7	1000	35.0	22.7	0.65	1.32	39.4	26.5	1000	23.5	2.16	16.2	92	3.18
40	3.8	1.0	2.4	750	32.6	20.2	0.62	1.51	37.7	21.6	750	24.7	2.45	16.7	100	2.95
	3.8	1.0	2.4	1000	34.0	22.8	0.67	1.57	39.3	21.6	1000	25.3	2.20	17.8	93	3.36
	5.6	2.0	4.7	750	33.1	20.3	0.61	1.42	37.9	23.3	750	25.7	2.48	17.6	102	3.04
	5.6	2.0	4.7	1000	34.5	22.9	0.67	1.48	39.5	23.3	1000	26.4	2.23	18.8	94	3.47
	7.5	3.7	8.6	750	33.7	20.5	0.61	1.38	38.3	24.4	750	26.3	2.49	18.1	102	3.10
	7.5	3.7	8.6	1000	35.1	23.2	0.66	1.44	39.9	24.4	1000	26.9	2.24	19.4	95	3.53
50	3.8	0.9	2.1	750	31.6	19.9	0.63	1.65	37.2	19.2	750	27.8	2.52	19.5	104	3.24
	3.8	0.9	2.1	1000	32.9	22.5	0.68	1.72	38.8	19.2	1000	28.5	2.26	20.8	96	3.69
	5.6	1.8	4.2	750	32.3	20.1	0.62	1.55	37.6	20.9	750	29.1	2.55	20.6	106	3.35
	5.6	1.8	4.2	1000	33.7	22.8	0.68	1.61	39.1	20.9	1000	29.8	2.29	22.0	98	3.82
	7.5	3.4	7.8	750	32.6	20.2	0.62	1.50	37.7	21.7	750	29.8	2.56	21.3	107	3.41
	7.5	3.4	7.8	1000	34.0	22.9	0.67	1.57	39.3	21.7	1000	30.5	2.30	22.7	98	3.89
60	3.8	0.8	1.8	750	30.4	19.4	0.64	1.81	36.6	16.8	750	31.0	2.58	22.4	108	3.52
	3.8	0.8	1.8	1000	31.7	21.9	0.69	1.89	38.1	16.8	1000	31.8	2.32	23.9	99	4.02
	5.6	1.7	3.8	750	31.1	19.6	0.63	1.70	36.9	18.3	750	32.5	2.61	23.7	110	3.65
	5.6	1.7	3.8	1000	32.4	22.2	0.69	1.77	38.4	18.3	1000	33.3	2.34	25.3	101	4.16
	7.5	3.1	7.2	750	31.4	19.7	0.63	1.65	37.0	19.0	750	33.3	2.63	24.4	111	3.71
	7.5	3.1	7.2	1000	32.7	22.3	0.68	1.71	38.5	19.1	1000	34.1	2.36	26.0	102	4.24
70	3.8	0.7	1.6	750	29.0	18.8	0.65	2.00	35.8	14.5	750	34.2	2.64	25.2	112	3.79
	3.8	0.7	1.6	1000	30.2	21.2	0.70	2.08	37.3	14.5	1000	35.1	2.37	26.9	102	4.33
	5.6	1.5	3.6	750	30.0	19.2	0.64	1.87	36.3	16.0	750	35.8	2.68	26.7	114	3.92
	5.6	1.5	3.6	1000	31.2	21.7	0.70	1.95	37.8	16.0	1000	36.7	2.40	28.5	104	4.47
	7.5	2.9	6.7	750	30.4	19.4	0.64	1.81	36.6	16.8	750	36.7	2.70	27.4	115	3.99
	7.5	2.9	6.7	1000	31.7	21.9	0.69	1.89	38.1	16.8	1000	37.6	2.42	29.3	105	4.55
80	3.8	0.7	1.5	750	27.7	18.3	0.66	2.21	35.3	12.5	750	37.3	2.71	28.0	116	4.04
	3.8	0.7	1.5	1000	28.8	20.7	0.72	2.30	36.7	12.5	1000	38.2	2.43	29.9	105	4.60
	5.6	1.4	3.3	750	28.5	18.5	0.65	2.07	35.5	13.7	750	39.0	2.75	29.5	118	4.15
	5.6	1.4	3.3	1000	29.6	21.0	0.71	2.16	37.0	13.7	1000	40.0	2.47	31.5	107	4.74
	7.5	2.7	6.3	750	29.0	18.7	0.65	2.00	35.8	14.5	750	40.2	2.78	30.6	120	4.24
	7.5	2.7	6.3	1000	30.2	21.2	0.70	2.08	37.3	14.5	1000	41.2	2.50	32.6	108	4.84
85	3.8	0.6	1.4	750	26.7	17.8	0.67	2.34	34.7	11.5	750	38.8	2.75	29.3	118	4.14
	3.8	0.6	1.4	1000	27.8	20.1	0.72	2.43	36.1	11.5	1000	39.8	2.5	31.3	107	4.72
	5.6	1.4	3.2	750	27.6	18.2	0.66	2.18	35.1	12.7	750	40.5	2.8	30.8	120	4.24
	5.6	1.4	3.2	1000	28.8	20.6	0.71	2.27	36.5	12.7	1000	41.5	2.5	32.9	108	4.84
	7.5	2.7	6.2	750	28.2	18.4	0.65	2.11	35.4	13.4	750	41.6	2.8	31.7	121	4.30
	7.5	2.7	6.2	1000	29.3	20.8	0.71	2.20	36.8	13.4	1000	42.6	2.5	33.9	109	4.91
90	3.8	0.6	1.4	750	25.7	17.3	0.67	2.46	34.1	10.5	750	40.3	2.79	30.6	120	4.23
	3.8	0.6	1.4	1000	26.8	19.6	0.73	2.56	35.5	10.5	1000	41.3	2.51	32.7	108	4.83
	5.6	1.4	3.1	750	26.8	17.8	0.66	2.30	34.7	11.7	750	42.0	2.85	32.1	122	4.33
	5.6	1.4	3.1	1000	27.9	20.1	0.72	2.39	36.1	11.7	1000	43.0	2.56	34.3	110	4.93
	7.5	2.6	6.0	750	27.3	18.0	0.66	2.22	34.9	12.3	750	42.9	2.88	32.9	123	4.36
	7.5	2.6	6.0	1000	28.5	20.4	0.72	2.31	36.4	12.3	1000	44.0	2.59	35.1	111	4.98
100	3.8	0.6	1.3	750	24.0	16.6	0.69	2.74	33.3	8.7	Operation not recommended					
	3.8	0.6	1.3	1000	24.9	18.8	0.75	2.85	34.7	8.7						
	5.6	1.3	3.0	750	25.1	17.0	0.68	2.56	33.8	9.8						
	5.6	1.3	3.0	1000	26.1	19.3	0.74	2.67	35.2	9.8						
	7.5	2.5	5.7	750	25.6	17.3	0.67	2.48	34.1	10.3						
	7.5	2.5	5.7	1000	26.7	19.6	0.73	2.58	35.5	10.3						
110	3.8	0.5	1.2	750	22.5	16.1	0.72	3.07	33.0	7.4						
	3.8	0.5	1.2	1000	23.5	18.2	0.78	3.19	34.4	7.4						
	5.6	1.2	2.8	750	23.2	16.3	0.70	2.86	33.1	8.1						
	5.6	1.2	2.8	1000	24.2	18.4	0.76	2.98	34.4	8.1						
	7.5	2.4	5.5	750	23.8	16.5	0.69	2.77	33.3	8.6						
	7.5	2.4	5.5	1000	24.8	18.7	0.75	2.88	34.6	8.6						
120	3.8	0.5	1.1	750	20.4	15.2	0.74	3.44	32.2	5.9						
	3.8	0.5	1.1	1000	21.2	17.2	0.81	3.58	33.5	5.9						
	5.6	1.2	2.7	750	21.4	15.6	0.73	3.21	32.4	6.7						
	5.6	1.2	2.7	1000	22.3	17.6	0.79	3.34	33.8	6.7						
	7.5	2.3	5.3	750	22.0	15.8	0.72	3.10	32.6	7.1						
	7.5	2.3	5.3	1000	22.9	17.8	0.78	3.23	33.9	7.1						

Interpolation is permissible; extrapolation is not.
All entering air conditions are 80°F DB and 67°F WB in cooling, and 70°F DB in heating.
AHRI/ISO certified conditions are 80.6°F DB and 66.2°F WB in cooling and 68°F DB in heating.
Table does not reflect fan or pump power corrections for AHRI/ISO conditions.
All performance is based upon the lower voltage of dual voltage rated units.
Performance stated is at the rated power supply; performance may vary as the power supply varies from the rated.
Operation below 40°F EWT is based upon a 15% methanol antifreeze solution.
Operation below 60°F EWT requires optional insulated water/refrigerant circuit.
See performance correction tables for operating conditions other than those listed above.
See Performance Data Selection Notes for operation in the shaded areas.

ClimateMaster works continually to improve its products. As a result, the design and specifications of each product at the time of order may be changed without notice and may not be as described herein. Please contact ClimateMaster's Customer Service Department at 1-405-745-6000 for specific information on the current design and specifications. Statements and other information contained herein are not express warranties and do not form the basis of any bargain between the parties, but are merely ClimateMaster's opinion or commendation of its products. The latest version of this document is available at **climatemaster.com**.

Performance Data – TC H/V 030 (ECM Blower)

1000 CFM Nominal (Rated) Airflow

Performance capacities shown in thousands of Btuh

EWT °F	GPM	WPD		Cooling - EAT 80/67°F							Heating - EAT 70°F					
		PSI	FT	Airflow CFM	TC	SC	Sens/Tot Ratio	kW	HR	EER	Airflow CFM	HC	kW	HE	LAT	COP
20	7.5	5.0	11.6	Operation not recommended							750	20.3	2.25	12.6	92.0	2.6
	7.5	5.0	11.6								1000	20.3	2.02	13.4	87.0	2.9
30	3.8	1.3	2.9	750	33.3	20.3	0.61	1.32	37.8	25.2	750	21.9	2.31	14.0	95.0	2.8
	3.8	1.3	2.9	1000	34.7	22.9	0.66	1.38	39.4	25.1	1000	22.0	2.07	14.9	89.0	3.1
	5.6	2.3	5.4	750	33.5	20.2	0.60	1.25	37.8	26.8	750	22.7	2.34	14.7	96.0	2.8
	5.6	2.3	5.4	1000	34.9	22.8	0.65	1.30	39.3	26.8	1000	22.8	2.09	15.7	90.0	3.2
	7.5	4.2	9.7	750	33.6	20.0	0.60	1.21	37.7	27.7	750	23.1	2.35	15.1	97.0	2.9
	7.5	4.2	9.7	1000	35.0	22.7	0.65	1.26	39.3	27.7	1000	23.4	2.10	16.2	90.0	3.3
40	3.8	1.0	2.4	750	32.6	20.2	0.62	1.45	37.6	22.5	750	24.9	2.39	16.7	99.0	3.0
	3.8	1.0	2.4	1000	34.0	22.8	0.67	1.51	39.2	22.5	1000	25.1	2.14	17.8	92.0	3.4
	5.6	2.0	4.7	750	33.1	20.3	0.61	1.36	37.7	24.3	750	25.9	2.42	17.6	100.0	3.1
	5.6	2.0	4.7	1000	34.5	22.9	0.66	1.42	39.4	24.3	1000	26.2	2.17	18.8	93.0	3.5
	7.5	3.7	8.6	750	33.7	20.5	0.61	1.32	38.2	25.5	750	26.4	2.43	18.1	101.0	3.2
	7.5	3.7	8.6	1000	35.1	23.2	0.66	1.38	39.8	25.4	1000	26.8	2.18	19.4	94.0	3.6
50	3.8	0.9	2.1	750	31.6	19.9	0.63	1.59	37.0	19.9	750	27.9	2.46	19.5	103.0	3.3
	3.8	0.9	2.1	1000	32.9	22.5	0.68	1.66	38.6	19.8	1000	28.3	2.20	20.8	95.0	3.8
	5.6	1.8	4.2	750	32.3	20.1	0.62	1.49	37.4	21.7	750	29.1	2.49	20.6	104.0	3.4
	5.6	1.8	4.2	1000	33.7	22.8	0.68	1.55	39.0	21.7	1000	29.6	2.23	22.0	96.0	3.9
	7.5	3.4	7.8	750	32.6	20.2	0.62	1.44	37.5	22.6	750	29.8	2.50	21.3	105.0	3.5
	7.5	3.4	7.8	1000	34.0	22.9	0.67	1.51	39.2	22.5	1000	30.3	2.24	22.7	97.0	4.0
60	3.8	0.8	1.8	750	30.4	19.4	0.64	1.75	36.4	17.4	750	31.0	2.52	22.4	106.0	3.6
	3.8	0.8	1.8	1000	31.7	21.9	0.69	1.83	37.9	17.3	1000	31.6	2.26	23.9	98.0	4.1
	5.6	1.7	3.8	750	31.1	19.6	0.63	1.64	36.7	18.9	750	32.4	2.55	23.7	108.0	3.7
	5.6	1.7	3.8	1000	32.4	22.2	0.69	1.71	38.2	18.9	1000	33.1	2.28	25.3	99.0	4.2
	7.5	3.1	7.2	750	31.4	19.7	0.63	1.59	36.8	19.7	750	33.2	2.57	24.4	109.0	3.8
	7.5	3.1	7.2	1000	32.7	22.3	0.68	1.65	38.3	19.8	1000	33.9	2.30	26.0	100.0	4.3
70	3.8	0.7	1.6	750	29.0	18.8	0.65	1.94	35.6	14.9	750	34.0	2.58	25.2	110.0	3.9
	3.8	0.7	1.6	1000	30.2	21.2	0.70	2.02	37.1	14.9	1000	34.8	2.31	26.9	101.0	4.4
	5.6	1.5	3.6	750	30.0	19.2	0.64	1.81	36.2	16.6	750	35.6	2.62	26.7	112.0	4.0
	5.6	1.5	3.6	1000	31.2	21.7	0.70	1.89	37.7	16.5	1000	36.5	2.34	28.5	102.0	4.6
	7.5	2.9	6.7	750	30.4	19.4	0.64	1.75	36.4	17.4	750	36.4	2.64	27.4	113.0	4.0
	7.5	2.9	6.7	1000	31.7	21.9	0.69	1.83	37.9	17.3	1000	37.4	2.36	29.3	103.0	4.6
80	3.8	0.7	1.5	750	27.7	18.3	0.66	2.15	35.0	12.9	750	37.0	2.65	28.0	114.0	4.1
	3.8	0.7	1.5	1000	28.8	20.7	0.72	2.24	36.4	12.8	1000	38.0	2.37	29.9	104.0	4.7
	5.6	1.4	3.3	750	28.5	18.5	0.65	2.01	35.4	14.2	750	38.7	2.69	29.5	116.0	4.2
	5.6	1.4	3.3	1000	29.6	21.0	0.71	2.10	36.8	14.1	1000	39.7	2.41	31.5	105.0	4.8
	7.5	2.7	6.3	750	29.0	18.7	0.64	1.94	35.6	14.9	750	39.9	2.72	30.6	117.0	4.3
	7.5	2.7	6.3	1000	30.2	21.2	0.70	2.02	37.1	14.9	1000	40.9	2.44	32.6	106.0	4.9
85	3.8	0.6	1.4	750	26.7	17.8	0.67	2.28	34.5	11.7	750	38.5	2.69	29.3	116.0	4.2
	3.8	0.6	1.4	1000	27.8	20.1	0.72	2.37	35.9	11.7	1000	39.6	2.44	31.3	105.0	4.8
	5.6	1.4	3.2	750	27.6	18.2	0.66	2.12	34.8	13.0	750	40.2	2.74	30.8	118.0	4.3
	5.6	1.4	3.2	1000	28.8	20.6	0.72	2.21	36.3	13.0	1000	41.2	2.44	32.9	107.0	4.9
	7.5	2.7	6.2	750	28.2	18.4	0.65	2.05	35.2	13.7	750	41.1	2.74	31.7	119.0	4.4
	7.5	2.7	6.2	1000	29.3	20.8	0.71	2.14	36.6	13.7	1000	42.2	2.44	33.9	108.0	5.1
90	3.8	0.6	1.4	750	25.7	17.3	0.67	2.40	33.9	10.7	750	39.9	2.73	30.6	117.0	4.3
	3.8	0.6	1.4	1000	26.8	19.6	0.73	2.50	35.3	10.7	1000	41.1	2.45	32.7	107.0	4.9
	5.6	1.4	3.1	750	26.8	17.8	0.66	2.24	34.4	12.0	750	41.6	2.79	32.1	120.0	4.4
	5.6	1.4	3.1	1000	27.9	20.1	0.72	2.33	35.9	12.0	1000	42.8	2.50	34.3	108.0	5.0
	7.5	2.6	6.0	750	27.3	18.0	0.66	2.16	34.7	12.6	750	42.5	2.82	32.9	121.0	4.4
	7.5	2.6	6.0	1000	28.5	20.4	0.72	2.25	36.2	12.7	1000	43.7	2.53	35.1	109.0	5.1
100	3.8	0.6	1.3	750	24.0	16.6	0.69	2.68	33.1	8.9	Operation not recommended					
	3.8	0.6	1.3	1000	24.9	18.8	0.76	2.79	34.4	8.9						
	5.6	1.3	3.0	750	25.1	17.0	0.68	2.50	33.6	10.0						
	5.6	1.3	3.0	1000	26.1	19.3	0.74	2.61	35.0	10.0						
	7.5	2.5	5.7	750	25.6	17.3	0.68	2.42	33.9	10.6						
	7.5	2.5	5.7	1000	26.7	19.6	0.73	2.52	35.3	10.6						
110	3.8	0.5	1.2	750	22.5	16.1	0.72	3.01	32.8	7.5						
	3.8	0.5	1.2	1000	23.5	18.2	0.77	3.13	34.2	7.5						
	5.6	1.2	2.8	750	23.2	16.3	0.70	2.80	32.8	8.3						
	5.6	1.2	2.8	1000	24.2	18.4	0.76	2.92	34.2	8.3						
	7.5	2.4	5.5	750	23.8	16.5	0.69	2.71	33.1	8.8						
	7.5	2.4	5.5	1000	24.8	18.7	0.75	2.82	34.4	8.8						
120	3.8	0.5	1.1	750	20.4	15.2	0.75	3.38	31.9	6.0						
	3.8	0.5	1.1	1000	21.2	17.2	0.81	3.52	33.2	6.0						
	5.6	1.2	2.7	750	21.4	15.6	0.73	3.15	32.2	6.8						
	5.6	1.2	2.7	1000	22.3	17.6	0.79	3.28	33.5	6.8						
	7.5	2.3	5.3	750	22.0	15.8	0.72	3.04	32.4	7.2						
	7.5	2.3	5.3	1000	22.9	17.8	0.78	3.17	33.7	7.2						

Interpolation is permissible; extrapolation is not.
All entering air conditions are 80°F DB and 67°F WB in cooling, and 70°F DB in heating.
AHRI/ISO certified conditions are 80.6°F DB and 66.2°F WB in cooling and 68°F DB in heating.
Table does not reflect fan or pump power corrections for AHRI/ISO conditions.
All performance is based upon the lower voltage of dual voltage rated units.
Performance stated is at the rated power supply; performance may vary as the power supply varies from the rated.
Operation below 40°F EWT is based upon a 15% methanol antifreeze solution.
Operation below 60°F EWT requires optional insulated water/refrigerant circuit.
See performance correction tables for operating conditions other than those listed above.
See Performance Data Selection Notes for operation in the shaded areas.

ClimateMaster works continually to improve its products. As a result, the design and specifications of each product at the time of order may be changed without notice and may not be as described herein. Please contact ClimateMaster's Customer Service Department at 1-405-745-6000 for specific information on the current design and specifications. Statements and other information contained herein are not express warranties and do not form the basis of any bargain between the parties, but are merely ClimateMaster's opinion or commendation of its products. The latest version of this document is available at **climatemaster.com**.

Performance Data – TC H/V 036 (PSC Blower)

1,200 CFM Nominal (Rated) Airflow

Performance capacities shown in thousands of Btuh

EWT °F	GPM	WPD		Cooling - EAT 80/67°F							Heating - EAT 70°F					
		PSI	FT	Airflow CFM	TC	SC	Sens/Tot Ratio	kW	HR	EER	Airflow CFM	HC	kW	HE	LAT	COP
20	9.0	6.4	14.8	Operation not recommended							860	22.6	2.67	14.1	94	2.49
	9.0	6.4	14.8								1150	23.2	2.39	15.1	89	2.84
30	4.5	1.8	4.3	860	39.9	24.2	0.61	1.67	45.6	23.8	860	25.6	2.80	16.6	98	2.68
	4.5	1.8	4.3	1150	41.5	27.4	0.66	1.74	47.4	23.8	1150	26.2	2.51	17.7	91	3.06
	6.8	3.1	7.1	860	40.1	24.3	0.61	1.62	45.5	24.7	860	26.8	2.85	17.6	99	2.76
	6.8	3.1	7.1	1150	41.7	27.5	0.66	1.69	47.4	24.7	1150	27.5	2.56	18.8	92	3.15
	9.0	5.4	12.5	860	40.0	24.3	0.61	1.60	45.5	25.0	860	27.5	2.88	18.2	100	2.80
	9.0	5.4	12.5	1150	41.7	27.5	0.66	1.67	47.3	25.0	1150	28.2	2.59	19.4	93	3.19
40	4.5	1.6	3.6	860	39.2	24.0	0.61	1.80	45.3	21.8	860	30.1	2.98	20.3	102	2.95
	4.5	1.6	3.6	1150	40.8	27.2	0.67	1.87	47.1	21.8	1150	30.8	2.68	21.7	95	3.37
	6.8	2.7	6.2	860	39.7	24.2	0.61	1.71	45.5	23.3	860	31.6	3.05	21.6	104	3.04
	6.8	2.7	6.2	1150	41.4	27.4	0.66	1.78	47.4	23.3	1150	32.4	2.74	23.1	96	3.47
	9.0	4.8	11.1	860	39.9	24.3	0.61	1.67	45.6	23.9	860	32.4	3.08	22.3	105	3.09
	9.0	4.8	11.1	1150	41.6	27.4	0.66	1.74	47.4	23.9	1150	33.2	2.77	23.8	97	3.52
50	4.5	1.4	3.2	860	38.0	23.6	0.62	1.98	44.7	19.2	860	34.5	3.16	24.1	107	3.20
	4.5	1.4	3.2	1150	39.5	26.7	0.68	2.06	46.5	19.2	1150	35.4	2.84	25.7	98	3.65
	6.8	2.4	5.6	860	38.8	23.9	0.62	1.85	45.1	21.0	860	36.3	3.23	25.6	109	3.30
	6.8	2.4	5.6	1150	40.4	27.0	0.67	1.92	47.0	21.0	1150	37.2	2.90	27.3	100	3.76
	9.0	4.4	10.1	860	39.2	24.0	0.61	1.79	45.3	21.9	860	37.3	3.27	26.4	110	3.35
	9.0	4.4	10.1	1150	40.8	27.2	0.67	1.87	47.2	21.9	1150	38.2	2.93	28.2	101	3.82
60	4.5	1.3	2.9	860	36.1	22.9	0.63	2.20	43.6	16.4	860	38.9	3.32	27.8	112	3.43
	4.5	1.3	2.9	1150	37.6	25.9	0.69	2.29	45.4	16.4	1150	39.8	2.99	29.7	102	3.91
	6.8	2.3	5.2	860	37.5	23.5	0.63	2.04	44.4	18.4	860	40.9	3.40	29.5	114	3.53
	6.8	2.3	5.2	1150	39.1	26.5	0.68	2.13	46.3	18.4	1150	41.9	3.05	31.5	104	4.02
	9.0	4.0	9.3	860	38.0	23.6	0.62	1.97	44.7	19.3	860	42.0	3.44	30.4	115	3.58
	9.0	4.0	9.3	1150	39.6	26.7	0.68	2.05	46.5	19.3	1150	43.0	3.09	32.5	105	4.08
70	4.5	1.2	2.7	860	34.6	22.5	0.65	2.46	42.9	14.0	860	43.1	3.47	31.4	116	3.64
	4.5	1.2	2.7	1150	36.0	25.5	0.71	2.56	44.7	14.0	1150	44.1	3.12	33.5	106	4.15
	6.8	2.1	4.9	860	35.8	22.9	0.64	2.28	43.6	15.7	860	45.2	3.55	33.2	119	3.74
	6.8	2.1	4.9	1150	37.3	25.9	0.70	2.38	45.4	15.7	1150	46.3	3.19	35.4	107	4.26
	9.0	3.8	8.7	860	36.4	23.1	0.63	2.20	43.9	16.6	860	46.4	3.59	34.2	120	3.79
	9.0	3.8	8.7	1150	37.9	26.1	0.69	2.29	45.7	16.6	1150	47.5	3.22	36.5	108	4.32
80	4.5	1.1	2.5	860	32.5	21.8	0.67	2.76	41.9	11.8	860	47.0	3.61	34.8	121	3.82
	4.5	1.1	2.5	1150	33.8	24.7	0.73	2.88	43.7	11.8	1150	48.2	3.24	37.1	109	4.36
	6.8	2.0	4.6	860	33.9	22.3	0.66	2.56	42.6	13.2	860	49.2	3.68	36.6	123	3.92
	6.8	2.0	4.6	1150	35.3	25.2	0.72	2.67	44.4	13.2	1150	50.4	3.30	39.1	111	4.47
	9.0	3.6	8.3	860	34.5	22.5	0.65	2.47	42.9	14.0	860	50.3	3.71	37.6	124	3.97
	9.0	3.6	8.3	1150	35.9	25.5	0.71	2.57	44.7	14.0	1150	51.5	3.34	40.1	111	4.53
85	4.5	1.0	2.4	860	31.5	21.5	0.68	2.9	41.5	10.8	860	48.8	3.67	36.3	123	3.90
	4.5	1.0	2.4	1150	32.8	24.4	0.74	3.05	43.3	10.8	1150	50.0	3.29	38.8	110	4.45
	6.8	1.9	4.4	860	32.8	21.9	0.67	2.72	42.1	12.1	860	50.9	3.73	38.1	125	4.00
	6.8	1.9	4.4	1150	34.1	24.8	0.73	2.84	43.8	12.1	1150	52.2	3.35	40.7	112	4.56
	9.0	3.5	8.1	860	33.4	22.1	0.66	2.62	42.3	12.8	860	52.0	3.76	39.0	126	4.05
	9.0	3.5	8.1	1150	34.7	25.0	0.72	2.73	44.1	12.8	1150	53.2	3.38	41.7	113	4.62
90	4.5	1.0	2.3	860	30.5	21.2	0.70	3.10	41.1	9.8	860	50.6	3.72	37.9	125	3.99
	4.5	1.0	2.3	1150	31.8	24.0	0.76	3.23	42.8	9.8	1150	51.9	3.34	40.4	112	4.54
	6.8	1.9	4.3	860	31.7	21.6	0.68	2.88	41.6	11.0	860	52.7	3.79	39.6	127	4.08
	6.8	1.9	4.3	1150	33.0	24.4	0.74	3.00	43.3	11.0	1150	54.0	3.40	42.3	113	4.65
	9.0	3.4	7.9	860	32.2	21.7	0.67	2.78	41.7	11.6	860	53.7	3.82	40.5	128	4.12
	9.0	3.4	7.9	1150	33.5	24.5	0.73	2.89	43.4	11.6	1150	55.0	3.43	43.2	114	4.70
100	4.5	0.9	2.2	860	28.3	20.5	0.72	3.47	40.2	8.1	Operation not recommended					
	4.5	0.9	2.2	1150	29.5	23.1	0.79	3.62	41.9	8.2						
	6.8	1.8	4.1	860	29.5	20.8	0.71	3.24	40.6	9.1						
	6.8	1.8	4.1	1150	30.7	23.5	0.77	3.37	42.2	9.1						
	9.0	3.3	7.5	860	30.1	21.0	0.70	3.13	40.8	9.6						
	9.0	3.3	7.5	1150	31.3	23.7	0.76	3.25	42.5	9.6						
110	4.5	0.9	2.1	860	26.2	19.8	0.75	3.88	39.5	6.8						
	4.5	0.9	2.1	1150	27.3	22.4	0.82	4.04	41.1	6.8						
	6.8	1.7	4.0	860	27.2	20.0	0.73	3.63	39.7	7.5						
	6.8	1.7	4.0	1150	28.4	22.6	0.80	3.78	41.3	7.5						
	9.0	3.1	7.2	860	27.6	20.0	0.72	3.51	39.6	7.9						
	9.0	3.1	7.2	1150	28.8	22.7	0.79	3.65	41.3	7.9						
120	4.5	0.9	2.0	860	24.1	19.0	0.79	4.31	38.9	5.6						
	4.5	0.9	2.0	1150	25.1	21.4	0.86	4.49	40.4	5.6						
	6.8	1.6	3.8	860	25.1	19.2	0.77	4.05	39.0	6.2						
	6.8	1.6	3.8	1150	26.1	21.8	0.83	4.21	40.6	6.2						
	9.0	3.0	7.0	860	25.4	19.2	0.76	3.92	38.9	6.5						
	9.0	3.0	7.0	1150	26.5	21.8	0.82	4.08	40.5	6.5						

Interpolation is permissible; extrapolation is not.
All entering air conditions are 80°F DB and 67°F WB in cooling, and 70°F DB in heating.
AHRI/ISO certified conditions are 80.6°F DB and 66.2°F WB in cooling and 68°F DB in heating.
Table does not reflect fan or pump power corrections for AHRI/ISO conditions.
All performance is based upon the lower voltage of dual voltage rated units.
Performance stated is at the rated power supply; performance may vary as the power supply varies from the rated.
Operation below 40°F EWT is based upon a 15% methanol antifreeze solution.
Operation below 60°F EWT requires optional insulated water/refrigerant circuit.
See performance correction tables for operating conditions other than those listed above.
See Performance Data Selection Notes for operation in the shaded areas.

ClimateMaster works continually to improve its products. As a result, the design and specifications of each product at the time of order may be changed without notice and may not be as described herein. Please contact ClimateMaster's Customer Service Department at 1-405-745-6000 for specific information on the current design and specifications. Statements and other information contained herein are not express warranties and do not form the basis of any bargain between the parties, but are merely ClimateMaster's opinion or commendation of its products. The latest version of this document is available at **climatemaster.com**.

1125 CFM Nominal (Rated) Airflow

Performance capacities shown in thousands of Btuh

EWT °F	GPM	WPD		Cooling - EAT 80/67°F							Heating - EAT 70°F					
		PSI	FT	Airflow CFM	TC	SC	Sens/Tot Ratio	kW	HR	EER	Airflow CFM	HC	kW	HE	LAT	COP
20	9.0	6.4	14.8	Operation not recommended							860	23.1	2.63	14.1	92.0	2.6
	9.0	6.4	14.8								1125	23.1	2.35	15.1	87.0	2.9
30	4.5	1.8	4.3	860	39.9	24.2	0.61	1.63	45.5	24.4	860	26.0	2.76	16.6	95.0	2.8
	4.5	1.8	4.3	1125	41.5	27.4	0.66	1.70	47.3	24.4	1125	26.1	2.47	17.7	89.0	3.1
	6.8	3.1	7.1	860	40.1	24.3	0.61	1.58	45.5	25.3	860	27.2	2.81	17.6	96.0	2.8
	6.8	3.1	7.1	1125	41.7	27.5	0.66	1.65	47.3	25.2	1125	27.4	2.52	18.8	90.0	3.2
	9.0	5.4	12.5	860	40.0	24.3	0.61	1.56	45.3	25.6	860	27.9	2.84	18.2	97.0	2.9
	9.0	5.4	12.5	1125	41.7	27.5	0.66	1.63	47.3	25.5	1125	28.1	2.55	19.4	90.0	3.2
40	4.5	1.6	3.6	860	39.2	24.0	0.61	1.76	45.2	22.2	860	30.3	2.94	20.3	99.0	3.0
	4.5	1.6	3.6	1125	40.8	27.2	0.67	1.83	47.1	22.3	1125	30.7	2.64	21.7	92.0	3.4
	6.8	2.7	6.2	860	39.7	24.2	0.61	1.67	45.4	23.7	860	31.9	3.01	21.6	100.0	3.1
	6.8	2.7	6.2	1125	41.4	27.4	0.66	1.74	47.3	23.8	1125	32.3	2.70	23.1	93.0	3.5
	9.0	4.8	11.1	860	39.9	24.3	0.61	1.63	45.5	24.4	860	32.7	3.04	22.3	101.0	3.1
	9.0	4.8	11.1	1125	41.6	27.4	0.66	1.70	47.4	24.4	1125	33.1	2.73	23.8	94.0	3.6
50	4.5	1.4	3.2	860	38.0	23.6	0.62	1.94	44.6	19.6	860	34.8	3.12	24.1	103.0	3.3
	4.5	1.4	3.2	1125	39.5	26.7	0.68	2.02	46.4	19.5	1125	35.3	2.80	25.7	95.0	3.7
	6.8	2.4	5.6	860	38.8	23.9	0.62	1.81	45.0	21.4	860	36.5	3.19	25.6	104.0	3.4
	6.8	2.4	5.6	1125	40.4	27.0	0.67	1.88	46.8	21.5	1125	37.1	2.86	27.3	96.0	3.8
	9.0	4.4	10.1	860	39.2	24.0	0.61	1.75	45.2	22.4	860	37.4	3.23	26.4	105.0	3.4
	9.0	4.4	10.1	1125	40.8	27.2	0.67	1.83	47.1	22.3	1125	38.1	2.89	28.2	97.0	3.9
60	4.5	1.3	2.9	860	36.1	22.9	0.63	2.16	43.5	16.7	860	39.0	3.28	27.8	106.0	3.5
	4.5	1.3	2.9	1125	37.6	25.9	0.69	2.25	45.3	16.7	1125	39.8	2.95	29.7	98.0	3.9
	6.8	2.3	5.2	860	37.5	23.5	0.63	2.00	44.3	18.7	860	41.0	3.36	29.5	108.0	3.6
	6.8	2.3	5.2	1125	39.1	26.5	0.68	2.09	46.2	18.7	1125	41.8	3.01	31.5	99.0	4.1
	9.0	4.0	9.3	860	38.0	23.6	0.62	1.93	44.6	19.7	860	42.0	3.40	30.4	109.0	3.6
	9.0	4.0	9.3	1125	39.6	26.7	0.67	2.01	46.5	19.7	1125	42.9	3.05	32.5	100.0	4.1
70	4.5	1.2	2.7	860	34.6	22.5	0.65	2.42	42.9	14.3	860	43.1	3.43	31.4	110.0	3.7
	4.5	1.2	2.7	1125	36.0	25.5	0.71	2.52	44.6	14.3	1125	44.0	3.08	33.5	101.0	4.2
	6.8	2.1	4.9	860	35.8	22.9	0.64	2.24	43.5	16.0	860	45.2	3.51	33.2	112.0	3.8
	6.8	2.1	4.9	1125	37.3	25.9	0.69	2.34	45.3	15.9	1125	46.2	3.15	35.4	102.0	4.3
	9.0	3.8	8.7	860	36.4	23.1	0.63	2.16	43.8	16.8	860	46.3	3.55	34.2	113.0	3.8
	9.0	3.8	8.7	1125	37.9	26.1	0.69	2.25	45.6	16.8	1125	47.4	3.18	36.5	103.0	4.4
80	4.5	1.1	2.5	860	32.5	21.8	0.67	2.72	41.8	11.9	860	47.0	3.57	34.8	114.0	3.9
	4.5	1.1	2.5	1125	33.8	24.7	0.73	2.84	43.5	11.9	1125	48.0	3.20	37.1	104.0	4.4
	6.8	2.0	4.6	860	33.9	22.3	0.66	2.52	42.5	13.4	860	49.0	3.64	36.6	116.0	3.9
	6.8	2.0	4.6	1125	35.3	25.2	0.71	2.63	44.3	13.4	1125	50.2	3.26	39.1	105.0	4.5
	9.0	3.6	8.3	860	34.5	22.5	0.65	2.43	42.8	14.2	860	50.1	3.67	37.6	117.0	4.0
	9.0	3.6	8.3	1125	35.9	25.5	0.71	2.53	44.5	14.2	1125	51.4	3.30	40.1	106.0	4.6
85	4.5	1.0	2.4	860	31.5	21.5	0.68	2.86	41.3	11.0	860	48.7	3.63	36.3	116.0	3.9
	4.5	1.0	2.4	1125	32.8	24.4	0.74	3.01	43.1	10.9	1125	49.9	3.25	38.8	105.0	4.5
	6.8	1.9	4.4	860	32.8	21.9	0.67	2.68	42.0	12.2	860	50.7	3.69	38.1	118.0	4.0
	6.8	1.9	4.4	1125	34.1	24.8	0.73	2.80	43.7	12.2	1125	52.0	3.31	40.7	107.0	4.6
	9.0	3.5	8.1	860	33.4	22.1	0.66	2.58	42.2	12.9	860	51.7	3.72	39.0	119.0	4.1
	9.0	3.5	8.1	1125	34.7	25.0	0.72	2.69	43.9	12.9	1125	53.1	3.34	41.7	108.0	4.7
90	4.5	1.0	2.3	860	30.5	21.2	0.70	3.06	40.9	10.0	860	50.5	3.68	37.9	117.0	4.0
	4.5	1.0	2.3	1125	31.8	24.0	0.75	3.19	42.7	10.0	1125	51.7	3.30	40.4	107.0	4.6
	6.8	1.9	4.3	860	31.7	21.6	0.68	2.84	41.4	11.2	860	52.4	3.75	39.6	120.0	4.1
	6.8	1.9	4.3	1125	33.0	24.4	0.74	2.96	43.1	11.1	1125	53.8	3.36	42.3	108.0	4.7
	9.0	3.4	7.9	860	32.2	21.7	0.67	2.74	41.6	11.7	860	53.4	3.78	40.5	121.0	4.1
	9.0	3.4	7.9	1125	33.5	24.5	0.73	2.85	43.2	11.7	1125	54.8	3.39	43.2	109.0	4.7
100	4.5	0.9	2.2	860	28.3	20.5	0.72	3.43	40.0	8.2	Operation not recommended					
	4.5	0.9	2.2	1125	29.5	23.1	0.78	3.58	41.7	8.2						
	6.8	1.8	4.1	860	29.5	20.8	0.71	3.20	40.4	9.2						
	6.8	1.8	4.1	1125	30.7	23.5	0.77	3.33	42.1	9.2						
	9.0	3.3	7.5	860	30.1	21.0	0.70	3.09	40.7	9.7						
	9.0	3.3	7.5	1125	31.3	23.7	0.76	3.21	42.3	9.7						
110	4.5	0.9	2.1	860	26.2	19.8	0.76	3.84	39.3	6.8						
	4.5	0.9	2.1	1125	27.3	22.4	0.82	4.00	41.0	6.8						
	6.8	1.7	4.0	860	27.2	20.0	0.74	3.59	39.5	7.6						
	6.8	1.7	4.0	1125	28.4	22.6	0.80	3.74	41.2	7.6						
	9.0	3.1	7.2	860	27.6	20.0	0.72	3.47	39.4	7.9						
	9.0	3.1	7.2	1125	28.8	22.7	0.79	3.61	41.1	8.0						
120	4.5	0.9	2.0	860	24.1	19.0	0.79	4.27	38.7	5.6						
	4.5	0.9	2.0	1125	25.1	21.4	0.85	4.45	40.3	5.6						
	6.8	1.6	3.8	860	25.1	19.2	0.76	4.01	38.8	6.3						
	6.8	1.6	3.8	1125	26.1	21.8	0.84	4.17	40.3	6.3						
	9.0	3.0	7.0	860	25.4	19.2	0.76	3.88	38.6	6.5						
	9.0	3.0	7.0	1125	26.5	21.8	0.82	4.04	40.3	6.6						

Interpolation is permissible; extrapolation is not.
All entering air conditions are 80°F DB and 67°F WB in cooling, and 70°F DB in heating.
AHRI/ISO certified conditions are 80.6°F DB and 66.2°F WB in cooling and 68°F DB in heating.
Table does not reflect fan or pump power corrections for AHRI/ISO conditions.
All performance is based upon the lower voltage of dual voltage rated units.
Performance stated is at the rated power supply; performance may vary as the power supply varies from the rated.
Operation below 40°F EWT is based upon a 15% methanol antifreeze solution.
Operation below 60°F EWT requires optional insulated water/refrigerant circuit.
See performance correction tables for operating conditions other than those listed above.
See Performance Data Selection Notes for operation in the shaded areas.

ClimateMaster works continually to improve its products. As a result, the design and specifications of each product at the time of order may be changed without notice and may not be as described herein. Please contact ClimateMaster's Customer Service Department at 1-405-745-6000 for specific information on the current design and specifications. Statements and other information contained herein are not express warranties and do not form the basis of any bargain between the parties, but are merely ClimateMaster's opinion or commendation of its products. The latest version of this document is available at **climatemaster.com**.

1125 CFM Nominal (Rated) Airflow

Performance capacities shown in thousands of Btuh

EWT	GPM	WPD		Cooling - EAT 80/67ºF						Heating - EAT 70ºF					
ºF		PSI	FT	Airflow CFM	TC	SC	kW	HR	EER	Airflow CFM	HC	kW	HE	LAT	COP
20	10.0	8.8	20.3	Operation not recommended						845	26.6	3.17	16.5	99.1	2.5
	10.0	8.8	20.3							1125	27.2	2.85	17.6	92.4	2.8
30	5.0	2.2	5.0	845	45.0	25.2	1.64	50.5	27.4	845	28.8	3.23	18.4	101.6	2.6
	5.0	2.2	5.0	1125	46.8	28.5	1.71	52.6	27.4	1125	29.5	2.90	19.7	94.3	3.0
	7.5	4.6	10.7	845	45.8	25.3	1.51	50.8	30.4	845	29.9	3.26	19.4	102.8	2.7
	7.5	4.6	10.7	1125	47.6	28.6	1.57	52.9	30.4	1125	30.7	2.93	20.7	95.2	3.1
	10.0	7.7	17.9	845	46.1	25.3	1.44	50.9	32.1	845	30.5	3.28	20.0	103.5	2.7
	10.0	7.7	17.9	1125	48.0	28.6	1.50	53.0	32.1	1125	31.3	2.94	21.3	95.7	3.1
40	5.0	1.9	4.3	845	43.8	24.9	1.81	50.0	24.2	845	32.4	3.33	21.6	105.6	2.9
	5.0	1.9	4.3	1125	45.6	28.1	1.89	52.0	24.2	1125	33.2	2.99	23.1	97.4	3.3
	7.5	4.0	9.3	845	44.3	25.0	1.75	50.2	25.3	845	33.8	3.37	22.8	107.0	2.9
	7.5	4.0	9.3	1125	46.1	28.3	1.82	52.3	25.3	1125	34.6	3.02	24.3	98.5	3.4
	10.0	6.9	19.9	845	44.6	25.1	1.70	50.4	26.2	845	34.5	3.39	23.4	107.8	3.0
	10.0	6.9	19.9	1125	46.5	28.4	1.77	52.4	26.2	1125	35.3	3.04	25.0	99.1	3.4
50	5.0	1.6	3.6	845	42.4	24.4	1.99	49.2	21.3	845	36.1	3.43	24.8	109.6	3.1
	5.0	1.6	3.6	1125	44.2	27.6	2.07	51.2	21.3	1125	37.0	3.08	26.5	100.4	3.5
	7.5	3.5	8.0	845	43.5	24.8	1.86	49.8	23.4	845	37.6	3.47	26.2	111.2	3.2
	7.5	3.5	8.0	1125	45.3	28.0	1.93	51.8	23.4	1125	38.5	3.12	27.9	101.7	3.6
	10.0	6.1	14.2	845	44.0	24.9	1.79	50.1	24.6	845	38.4	3.50	26.9	112.1	3.2
	10.0	6.1	14.2	1125	45.8	28.2	1.86	52.1	24.6	1125	39.4	3.14	28.7	102.4	3.7
60	5.0	1.3	3.0	845	40.9	23.8	2.18	48.3	18.8	845	39.7	3.53	28.0	113.5	3.3
	5.0	1.3	3.0	1125	42.6	27.0	2.27	50.3	18.8	1125	40.7	3.17	29.9	103.5	3.8
	7.5	3.0	7.0	845	42.1	24.3	2.04	49.0	20.6	845	41.5	3.58	29.5	115.4	3.4
	7.5	3.0	7.0	1125	43.8	27.4	2.12	51.0	20.6	1125	42.5	3.22	31.5	104.9	3.9
	10.0	5.5	12.8	845	42.6	24.5	1.97	49.3	21.7	845	42.4	3.61	30.3	116.4	3.4
	10.0	5.5	12.8	1125	44.4	27.7	2.05	51.3	21.7	1125	43.4	3.24	32.4	105.7	3.9
70	5.0	1.1	2.6	845	39.2	23.2	2.39	47.3	16.4	845	43.4	3.64	31.2	117.5	3.5
	5.0	1.1	2.6	1125	40.8	26.2	2.49	49.3	16.4	1125	44.4	3.27	33.3	106.6	4.0
	7.5	2.6	6.1	845	40.5	23.6	2.23	48.1	18.1	845	45.3	3.69	32.8	119.6	3.6
	7.5	2.6	6.1	1125	42.1	26.8	2.33	50.0	18.1	1125	46.4	3.32	35.1	108.2	4.1
	10.0	5.1	11.7	845	41.1	23.9	2.16	48.4	19.0	845	46.3	3.73	33.7	120.7	3.6
	10.0	5.1	11.7	1125	42.8	27.0	2.25	50.4	19.0	1125	47.4	3.35	36.0	109.0	4.2
80	5.0	0.9	2.2	845	37.4	22.5	2.63	46.4	14.2	845	47.0	3.75	34.3	121.5	3.7
	5.0	0.9	2.2	1125	38.9	25.4	2.74	48.3	14.2	1125	48.1	3.37	36.7	109.6	4.2
	7.5	2.3	5.4	845	38.7	23.0	2.46	47.1	15.8	845	49.1	3.81	36.1	123.8	3.8
	7.5	2.3	5.4	1125	40.3	26.0	2.56	49.0	15.8	1125	50.3	3.43	38.6	111.4	4.3
	10.0	4.7	11.0	845	39.4	23.2	2.37	47.4	16.6	845	50.2	3.85	37.1	125.0	3.8
	10.0	4.7	11.0	1125	41.0	26.3	2.47	49.4	16.6	1125	51.4	3.46	39.6	112.3	4.4
85	5.0	0.9	2.0	845	36.4	22.1	2.8	45.9	13.2	845	48.8	3.81	35.9	123.5	3.8
	5.0	0.9	2.0	1125	37.9	25.0	2.88	47.8	13.2	1125	50.0	3.4	38.3	111.1	4.3
	7.5	2.2	5.1	845	37.8	22.6	2.58	46.6	14.7	845	51.0	3.9	37.8	125.9	3.9
	7.5	2.2	5.1	1125	39.3	25.6	2.69	48.5	14.7	1125	52.2	3.5	40.3	113.0	4.4
	10.0	4.6	10.7	845	38.4	22.9	2.49	46.9	15.5	845	52.1	3.9	38.8	127.1	3.9
	10.0	4.6	10.7	1125	40.0	25.9	2.60	48.9	15.5	1125	53.4	3.5	41.4	114.0	4.4
90	5.0	0.8	1.9	845	35.5	21.8	2.91	45.4	12.2	845	50.6	3.86	37.4	125.5	3.8
	5.0	0.8	1.9	1125	36.9	24.6	3.03	47.3	12.2	1125	51.8	3.47	40.0	112.7	4.4
	7.5	2.1	4.4	845	36.8	22.3	2.71	46.1	13.6	845	52.9	3.94	39.4	127.9	3.9
	7.5	2.1	4.4	1125	38.3	25.2	2.82	48.0	13.6	1125	54.1	3.54	42.0	114.6	4.5
	10.0	4.6	10.6	845	37.5	22.5	2.62	46.4	14.3	845	54.1	3.99	40.4	129.3	4.0
	10.0	4.6	10.6	1125	39.0	25.5	2.72	48.3	14.3	1125	55.4	3.58	43.2	115.6	4.5
100	5.0	0.7	1.7	845	31.4	20.4	3.61	43.7	8.7	Operation not recommended					
	5.0	0.7	1.7	1125	32.7	23.0	3.76	45.5	8.7						
	7.5	2.0	4.5	845	32.8	20.8	3.35	44.2	9.8						
	7.5	2.0	4.5	1125	34.1	23.6	3.49	46.1	9.8						
	10.0	4.5	10.5	845	33.5	21.1	3.23	44.5	10.4						
	10.0	4.5	10.5	1125	34.9	23.8	3.36	46.4	10.4						
110	5.0	0.7	1.5	845	29.3	19.7	4.05	43.2	7.2						
	5.0	0.7	1.5	1125	30.5	22.3	4.22	44.9	7.2						
	7.5	1.9	4.4	845	30.7	20.1	3.75	43.5	8.2						
	7.5	1.9	4.4	1125	31.9	22.8	3.91	45.3	8.2						
	10.0	4.6	10.7	845	31.4	20.4	3.61	43.7	8.7						
	10.0	4.6	10.7	1125	32.7	23.0	3.76	45.5	8.7						
120	5.0	0.7	1.5	845	27.6	19.2	4.45	42.9	6.2						
	5.0	0.7	1.5	1125	28.7	21.7	4.63	44.6	6.2						
	7.5	1.9	4.4	845	29.0	19.6	4.11	43.1	7.1						
	7.5	1.9	4.4	1125	30.2	22.2	4.28	44.9	7.1						
	10.0	4.8	11.2	845	29.7	19.8	3.95	43.3	7.5						
	10.0	4.8	11.2	1125	30.9	22.4	4.12	45.0	7.5						

Interpolation is permissible; extrapolation is not.
All entering air conditions are 80°F DB and 67°F WB in cooling, and 70°F DB in heating.
AHRI/ISO certified conditions are 80.6°F DB and 66.2°F WB in cooling and 68°F DB in heating.
Table does not reflect fan or pump power corrections for AHRI/ISO conditions.
All performance is based upon the lower voltage of dual voltage rated units.
Performance stated is at the rated power supply; performance may vary as the power supply varies from the rated.
Operation below 40°F EWT is based upon a 15% methanol antifreeze solution.
Operation below 60°F EWT requires optional insulated water/refrigerant circuit.
See performance correction tables for operating conditions other than those listed above.
See Performance Data Selection Notes for operation in the shaded areas.

ClimateMaster works continually to improve its products. As a result, the design and specifications of each product at the time of order may be changed without notice and may not be as described herein. Please contact ClimateMaster's Customer Service Department at 1-405-745-6000 for specific information on the current design and specifications. Statements and other information contained herein are not express warranties and do not form the basis of any bargain between the parties, but are merely ClimateMaster's opinion or commendation of its products. The latest version of this document is available at **climatemaster.com**.

Performance Data – TC H/V 042 (PSC Blower)

1350 CFM Nominal (Rated) Airflow

Performance capacities shown in thousands of Btuh

EWT °F	GPM	WPD		Cooling - EAT 80/67°F							Heating - EAT 70°F					
		PSI	FT	Airflow CFM	TC	SC	Sens/Tot Ratio	kW	HR	EER	Airflow CFM	HC	kW	HE	LAT	COP
20	10.5	9.2	21.3	Operation not recommended							1050	28.8	3.37	18.1	95	2.51
	10.5	9.2	21.3								1400	29.5	3.03	19.3	90	2.86
30	5.3	2.3	5.3	1050	47.4	30.6	0.65	1.87	53.7	25.4	1050	31.6	3.45	20.5	98	2.68
	5.3	2.3	5.3	1400	49.3	34.7	0.70	1.95	55.9	25.4	1400	32.4	3.10	21.9	91	3.06
	7.9	4.3	10.0	1050	48.4	31.1	0.64	1.76	54.4	27.5	1050	32.9	3.49	21.6	99	2.76
	7.9	4.3	10.0	1400	50.4	35.2	0.70	1.83	56.6	27.5	1400	33.7	3.14	23.1	92	3.15
	10.5	7.9	18.2	1050	48.9	31.3	0.64	1.71	54.7	28.6	1050	33.6	3.52	22.3	100	2.80
	10.5	7.9	18.2	1400	50.9	35.5	0.70	1.78	57.0	28.6	1400	34.5	3.16	23.8	93	3.20
40	5.3	2.0	4.6	1050	45.9	29.9	0.65	2.05	52.8	22.4	1050	36.1	3.59	24.4	102	2.95
	5.3	2.0	4.6	1400	47.8	33.9	0.71	2.13	55.0	22.4	1400	37.0	3.23	26.1	94	3.36
	7.9	3.9	8.9	1050	47.0	30.4	0.65	1.92	53.4	24.5	1050	37.8	3.64	25.8	103	3.04
	7.9	3.9	8.9	1400	48.9	34.4	0.70	2.00	55.6	24.5	1400	38.7	3.27	27.6	96	3.46
	10.5	7.1	16.4	1050	47.5	30.7	0.65	1.86	53.8	25.5	1050	38.7	3.67	26.6	104	3.09
	10.5	7.1	16.4	1400	49.4	34.7	0.70	1.94	56.0	25.5	1400	39.6	3.30	28.4	96	3.52
50	5.3	1.8	4.1	1050	44.4	29.2	0.66	2.26	52.0	19.6	1050	40.8	3.74	28.5	106	3.20
	5.3	1.8	4.1	1400	46.2	33.1	0.72	2.35	54.2	19.6	1400	41.8	3.36	30.4	98	3.65
	7.9	3.5	8.1	1050	45.4	29.7	0.65	2.11	52.6	21.5	1050	42.8	3.80	30.2	108	3.30
	7.9	3.5	8.1	1400	47.3	33.6	0.71	2.20	54.8	21.5	1400	43.8	3.41	32.2	99	3.76
	10.5	6.5	15.0	1050	46.0	30.0	0.65	2.04	52.9	22.5	1050	43.9	3.83	31.1	109	3.35
	10.5	6.5	15.0	1400	47.9	33.9	0.71	2.12	55.1	22.5	1400	44.9	3.44	33.2	100	3.82
60	5.3	1.6	3.7	1050	43.1	28.8	0.67	2.51	51.7	17.2	1050	45.6	3.89	32.6	110	3.44
	5.3	1.6	3.7	1400	44.9	32.6	0.73	2.61	53.8	17.2	1400	46.7	3.49	34.8	101	3.92
	7.9	3.3	7.5	1050	43.9	29.0	0.66	2.34	51.8	18.8	1050	47.8	3.96	34.5	112	3.54
	7.9	3.3	7.5	1400	45.7	32.8	0.72	2.43	53.9	18.8	1400	49.0	3.56	36.9	102	4.04
	10.5	6.1	14.0	1050	44.4	29.2	0.66	2.25	52.1	19.7	1050	49.0	4.00	35.6	113	3.60
	10.5	6.1	14.0	1400	46.2	33.1	0.72	2.35	54.2	19.7	1400	50.2	3.59	38.0	103	4.10
70	5.3	1.5	3.4	1050	41.3	28.1	0.68	2.80	50.9	14.8	1050	50.3	4.04	36.7	114	3.65
	5.3	1.5	3.4	1400	43.0	31.8	0.74	2.91	52.9	14.8	1400	51.5	3.63	39.2	104	4.16
	7.9	3.1	7.1	1050	42.2	28.3	0.67	2.60	51.0	16.2	1050	52.8	4.11	38.8	117	3.76
	7.9	3.1	7.1	1400	43.9	32.0	0.73	2.71	53.1	16.2	1400	54.1	3.70	41.5	106	4.29
	10.5	5.7	13.2	1050	42.8	28.5	0.67	2.51	51.3	17.1	1050	54.1	4.16	40.0	118	3.82
	10.5	5.7	13.2	1400	44.5	32.3	0.73	2.61	53.4	17.1	1400	55.4	3.73	42.7	107	4.35
80	5.3	1.4	3.2	1050	39.5	27.4	0.70	3.13	50.1	12.6	1050	54.9	4.18	40.7	118	3.85
	5.3	1.4	3.2	1400	41.1	31.0	0.76	3.26	52.2	12.6	1400	56.3	3.76	43.4	107	4.39
	7.9	2.9	6.7	1050	40.4	27.6	0.68	2.91	50.3	13.9	1050	57.6	4.27	43.0	121	3.96
	7.9	2.9	6.7	1400	42.1	31.3	0.74	3.03	52.4	13.9	1400	59.0	3.83	45.9	109	4.51
	10.5	5.4	12.6	1050	41.0	27.9	0.68	2.80	50.6	14.6	1050	59.0	4.31	44.2	122	4.01
	10.5	5.4	12.6	1400	42.7	31.5	0.74	2.92	52.6	14.6	1400	60.4	3.87	47.2	110	4.58
85	5.3	1.3	3.1	1050	38.4	27.1	0.71	3.32	49.8	11.6	1050	57.2	4.25	42.6	120	3.94
	5.3	1.3	3.1	1400	40.0	30.7	0.77	3.46	51.8	11.6	1400	58.6	3.82	45.5	109	4.49
	7.9	2.8	6.5	1050	39.4	27.3	0.69	3.08	50.0	12.8	1050	59.9	4.34	44.9	123	4.05
	7.9	2.8	6.5	1400	41.1	30.9	0.75	3.21	52.0	12.9	1400	61.3	3.89	48.0	111	4.61
	10.5	5.3	12.3	1050	40.1	27.5	0.69	2.97	50.2	13.5	1050	61.3	4.38	46.2	124	4.10
	10.5	5.3	12.3	1400	41.7	31.2	0.75	3.09	52.3	13.6	1400	62.7	3.93	49.3	111	4.68
90	5.3	1.3	3.0	1050	37.4	26.8	0.72	3.51	49.4	10.7	1050	59.4	4.32	44.6	122	4.03
	5.3	1.3	3.0	1400	39.0	30.3	0.78	3.65	51.5	10.7	1400	60.8	3.88	47.6	110	4.59
	7.9	2.8	6.4	1050	38.5	27.0	0.70	3.26	49.6	11.8	1050	62.1	4.40	46.9	125	4.13
	7.9	2.8	6.4	1400	40.1	30.6	0.76	3.39	51.6	11.8	1400	63.6	3.96	50.1	112	4.71
	10.5	5.2	12.0	1050	39.1	27.2	0.70	3.14	49.8	12.5	1050	63.5	4.45	48.1	126	4.19
	10.5	5.2	12.0	1400	40.7	30.8	0.76	3.27	51.9	12.5	1400	65.1	3.99	51.4	113	4.77
100	5.3	1.2	2.8	1050	35.2	26.2	0.74	3.94	48.7	8.9	Operation not recommended					
	5.3	1.2	2.8	1400	36.7	29.6	0.81	4.10	50.7	8.9						
	7.9	2.7	6.1	1050	36.4	26.4	0.73	3.66	48.9	9.9						
	7.9	2.7	6.1	1400	37.9	29.9	0.79	3.81	50.9	9.9						
	10.5	5.0	11.6	1050	37.1	26.6	0.72	3.52	49.1	10.5						
	10.5	5.0	11.6	1400	38.6	30.1	0.78	3.67	51.1	10.5						
110	5.3	1.2	2.7	1050	32.8	25.5	0.78	4.41	47.9	7.4						
	5.3	1.2	2.7	1400	34.2	28.9	0.85	4.60	49.9	7.4						
	7.9	2.6	5.9	1050	34.1	25.7	0.76	4.11	48.1	8.3						
	7.9	2.6	5.9	1400	35.5	29.1	0.82	4.28	50.1	8.3						
	10.5	4.8	11.2	1050	34.8	25.9	0.75	3.96	48.4	8.8						
	10.5	4.8	11.2	1400	36.2	29.4	0.81	4.12	50.4	8.8						
120	5.3	1.1	2.6	1050	30.2	24.8	0.82	4.95	47.1	6.1						
	5.3	1.1	2.6	1400	31.4	28.0	0.89	5.15	49.1	6.1						
	7.9	2.5	5.7	1050	31.5	25.0	0.79	4.61	47.3	6.8						
	7.9	2.5	5.7	1400	32.8	28.3	0.86	4.80	49.3	6.8						
	10.5	4.7	10.8	1050	32.3	25.3	0.78	4.45	47.6	7.3						
	10.5	4.7	10.8	1400	33.7	28.6	0.85	4.63	49.5	7.3						

Interpolation is permissible; extrapolation is not.
All entering air conditions are 80°F DB and 67°F WB in cooling, and 70°F DB in heating.
AHRI/ISO certified conditions are 80.6°F DB and 66.2°F WB in cooling and 68°F DB in heating.
Table does not reflect fan or pump power corrections for AHRI/ISO conditions.
All performance is based upon the lower voltage of dual voltage rated units.
Performance stated is at the rated power supply; performance may vary as the power supply varies from the rated.
Operation below 40°F EWT is based upon a 15% methanol antifreeze solution.
Operation below 60°F EWT requires optional insulated water/refrigerant circuit.
See performance correction tables for operating conditions other than those listed above.
See Performance Data Selection Notes for operation in the shaded areas.

ClimateMaster works continually to improve its products. As a result, the design and specifications of each product at the time of order may be changed without notice and may not be as described herein. Please contact ClimateMaster's Customer Service Department at 1-405-745-6000 for specific information on the current design and specifications. Statements and other information contained herein are not express warranties and do not form the basis of any bargain between the parties, but are merely ClimateMaster's opinion or commendation of its products. The latest version of this document is available at **climatemaster.com**.

Performance Data – TC H/V 042 (ECM Blower)

1400 CFM Nominal (Rated) Airflow

Performance capacities shown in thousands of Btuh

EWT °F	GPM	WPD		Cooling - EAT 80/67°F							Heating - EAT 70°F					
		PSI	FT	Airflow CFM	TC	SC	Sens/Tot Ratio	kW	HR	EER	Airflow CFM	HC	kW	HE	LAT	COP
20	10.5	9.2	21.3	Operation not recommended							1050	29.1	3.21	18.1	92.0	2.7
	10.5	9.2	21.3								1400	29.1	2.87	19.3	87.0	3.0
30	5.3	2.3	5.3	1050	47.4	30.6	0.65	1.71	53.2	27.7	1050	31.7	3.29	20.5	95.0	2.8
	5.3	2.3	5.3	1400	49.3	34.7	0.70	1.79	55.4	27.5	1400	31.9	2.94	21.9	89.0	3.2
	7.9	4.3	10.0	1050	48.4	31.1	0.64	1.60	53.9	30.2	1050	33.0	3.33	21.6	96.0	2.9
	7.9	4.3	10.0	1400	50.4	35.2	0.70	1.67	56.1	30.2	1400	33.3	2.98	23.1	90.0	3.3
	10.5	7.9	18.2	1050	48.9	31.3	0.64	1.55	54.2	31.5	1050	33.8	3.36	22.3	97.0	2.9
	10.5	7.9	18.2	1400	50.9	35.5	0.70	1.62	56.4	31.4	1400	34.0	3.00	23.8	90.0	3.3
40	5.3	2.0	4.6	1050	45.9	29.9	0.65	1.89	52.4	24.3	1050	36.1	3.43	24.4	99.0	3.1
	5.3	2.0	4.6	1400	47.8	33.9	0.71	1.97	54.5	24.3	1400	36.6	3.07	26.1	92.0	3.5
	7.9	3.9	8.9	1050	47.0	30.4	0.65	1.76	53.0	26.7	1050	37.7	3.48	25.8	100.0	3.2
	7.9	3.9	8.9	1400	48.9	34.4	0.70	1.84	55.2	26.6	1400	38.2	3.11	27.6	93.0	3.6
	10.5	7.1	16.4	1050	47.5	30.7	0.65	1.70	53.3	27.9	1050	38.6	3.51	26.6	101.0	3.2
	10.5	7.1	16.4	1400	49.4	34.7	0.70	1.78	55.5	27.8	1400	39.1	3.14	28.4	94.0	3.7
50	5.3	1.8	4.1	1050	44.4	29.2	0.66	2.10	51.6	21.1	1050	40.7	3.58	28.5	103.0	3.3
	5.3	1.8	4.1	1400	46.2	33.1	0.72	2.19	53.7	21.1	1400	41.3	3.20	30.4	95.0	3.8
	7.9	3.5	8.1	1050	45.4	29.7	0.65	1.95	52.1	23.3	1050	42.6	3.64	30.2	104.0	3.4
	7.9	3.5	8.1	1400	47.3	33.6	0.71	2.04	54.3	23.2	1400	43.3	3.25	32.2	96.0	3.9
	10.5	6.5	15.0	1050	46.0	30.0	0.65	1.88	52.4	24.5	1050	43.6	3.67	31.1	105.0	3.5
	10.5	6.5	15.0	1400	47.9	33.9	0.71	1.96	54.6	24.4	1400	44.4	3.28	33.2	97.0	4.0
60	5.3	1.6	3.7	1050	43.1	28.8	0.67	2.35	51.1	18.3	1050	45.3	3.73	32.6	106.0	3.6
	5.3	1.6	3.7	1400	44.9	32.6	0.73	2.45	53.3	18.3	1400	46.2	3.33	34.8	98.0	4.1
	7.9	3.3	7.5	1050	43.9	29.0	0.66	2.18	51.3	20.1	1050	47.5	3.80	34.5	108.0	3.7
	7.9	3.3	7.5	1400	45.7	32.8	0.72	2.27	53.4	20.1	1400	48.5	3.40	36.9	99.0	4.2
	10.5	6.1	14.0	1050	44.4	29.2	0.66	2.09	51.5	21.2	1050	48.7	3.84	35.6	109.0	3.7
	10.5	6.1	14.0	1400	46.2	33.1	0.72	2.19	53.7	21.1	1400	49.7	3.43	38.0	100.0	4.2
70	5.3	1.5	3.4	1050	41.3	28.1	0.68	2.64	50.3	15.6	1050	49.9	3.88	36.7	110.0	3.8
	5.3	1.5	3.4	1400	43.0	31.8	0.74	2.75	52.4	15.6	1400	51.0	3.47	39.2	101.0	4.3
	7.9	3.1	7.1	1050	42.2	28.3	0.67	2.44	50.5	17.3	1050	52.3	3.95	38.8	112.0	3.9
	7.9	3.1	7.1	1400	43.9	32.0	0.73	2.55	52.6	17.2	1400	53.6	3.54	41.5	102.0	4.4
	10.5	5.7	13.2	1050	42.8	28.5	0.67	2.35	50.8	18.2	1050	53.6	4.00	40.0	113.0	3.9
	10.5	5.7	13.2	1400	44.5	32.3	0.73	2.45	52.9	18.2	1400	54.9	3.57	42.7	103.0	4.5
80	5.3	1.4	3.2	1050	39.5	27.4	0.69	2.97	49.6	13.3	1050	54.4	4.02	40.7	114.0	4.0
	5.3	1.4	3.2	1400	41.1	31.0	0.75	3.10	51.7	13.3	1400	55.7	3.60	43.4	104.0	4.5
	7.9	2.9	6.7	1050	40.4	27.6	0.68	2.75	49.8	14.7	1050	57.0	4.11	43.0	116.0	4.1
	7.9	2.9	6.7	1400	42.1	31.3	0.74	2.87	51.9	14.7	1400	58.4	3.67	45.9	105.0	4.7
	10.5	5.4	12.6	1050	41.0	27.9	0.68	2.64	50.0	15.5	1050	58.4	4.15	44.2	117.0	4.1
	10.5	5.4	12.6	1400	42.7	31.5	0.74	2.76	52.1	15.5	1400	59.9	3.71	47.2	106.0	4.7
85	5.3	1.3	3.1	1050	38.4	27.1	0.71	3.16	49.2	12.2	1050	56.6	4.09	42.6	116.0	4.1
	5.3	1.3	3.1	1400	40.0	30.7	0.77	3.30	51.3	12.1	1400	58.0	3.66	45.5	105.0	4.6
	7.9	2.8	6.5	1050	39.4	27.3	0.69	2.92	49.4	13.5	1050	59.2	4.18	44.9	118.0	4.1
	7.9	2.8	6.5	1400	41.1	30.9	0.75	3.05	51.5	13.5	1400	60.7	3.73	48.0	107.0	4.8
	10.5	5.3	12.3	1050	40.1	27.5	0.69	2.81	49.7	14.3	1050	60.6	4.22	46.2	119.0	4.2
	10.5	5.3	12.3	1400	41.7	31.2	0.75	2.93	51.7	14.2	1400	62.2	3.77	49.3	108.0	4.8
90	5.3	1.3	3.0	1050	37.4	26.8	0.72	3.35	48.8	11.2	1050	58.8	4.16	44.6	117.0	4.1
	5.3	1.3	3.0	1400	39.0	30.3	0.78	3.49	50.9	11.2	1400	60.3	3.72	47.6	107.0	4.8
	7.9	2.8	6.4	1050	38.5	27.0	0.70	3.10	49.1	12.4	1050	61.4	4.24	46.9	120.0	4.2
	7.9	2.8	6.4	1400	40.1	30.6	0.76	3.23	51.1	12.4	1400	63.1	3.80	50.1	108.0	4.9
	10.5	5.2	12.0	1050	39.1	27.2	0.70	2.98	49.3	13.1	1050	62.7	4.29	48.1	121.0	4.3
	10.5	5.2	12.0	1400	40.7	30.8	0.76	3.11	51.3	13.1	1400	64.5	3.83	51.4	109.0	4.9
100	5.3	1.2	2.8	1050	35.2	26.2	0.74	3.78	48.1	9.3	Operation not recommended					
	5.3	1.2	2.8	1400	36.7	29.6	0.81	3.94	50.1	9.3						
	7.9	2.7	6.1	1050	36.4	26.4	0.73	3.50	48.3	10.4						
	7.9	2.7	6.1	1400	37.9	29.9	0.79	3.65	50.4	10.4						
	10.5	5.0	11.6	1050	37.1	26.6	0.72	3.36	48.6	11.0						
	10.5	5.0	11.6	1400	38.6	30.1	0.78	3.51	50.6	11.0						
110	5.3	1.2	2.7	1050	32.8	25.5	0.78	4.25	47.3	7.7						
	5.3	1.2	2.7	1400	34.2	28.9	0.85	4.44	49.4	7.7						
	7.9	2.6	5.9	1050	34.1	25.7	0.75	3.95	47.6	8.6						
	7.9	2.6	5.9	1400	35.5	29.1	0.82	4.12	49.6	8.6						
	10.5	4.8	11.2	1050	34.8	25.9	0.74	3.80	47.8	9.2						
	10.5	4.8	11.2	1400	36.2	29.4	0.81	3.96	49.7	9.1						
120	5.3	1.1	2.6	1050	30.2	24.8	0.82	4.79	46.5	6.3						
	5.3	1.1	2.6	1400	31.4	28.0	0.89	4.99	48.4	6.3						
	7.9	2.5	5.7	1050	31.5	25.0	0.79	4.45	46.7	7.1						
	7.9	2.5	5.7	1400	32.8	28.3	0.86	4.64	48.6	7.1						
	10.5	4.7	10.8	1050	32.3	25.3	0.78	4.29	46.9	7.5						
	10.5	4.7	10.8	1400	33.7	28.6	0.85	4.47	49.0	7.5						

Interpolation is permissible; extrapolation is not.
All entering air conditions are 80°F DB and 67°F WB in cooling, and 70°F DB in heating.
AHRI/ISO certified conditions are 80.6°F DB and 66.2°F WB in cooling and 68°F DB in heating.
Table does not reflect fan or pump power corrections for AHRI/ISO conditions.
All performance is based upon the lower voltage of dual voltage rated units.
Performance stated is at the rated power supply; performance may vary as the power supply varies from the rated.
Operation below 40°F EWT is based upon a 15% methanol antifreeze solution.
Operation below 60°F EWT requires optional insulated water/refrigerant circuit.
See performance correction tables for operating conditions other than those listed above.
See Performance Data Selection Notes for operation in the shaded areas.

ClimateMaster works continually to improve its products. As a result, the design and specifications of each product at the time of order may be changed without notice and may not be as described herein. Please contact ClimateMaster's Customer Service Department at 1-405-745-6000 for specific information on the current design and specifications. Statements and other information contained herein are not express warranties and do not form the basis of any bargain between the parties, but are merely ClimateMaster's opinion or commendation of its products. The latest version of this document is available at **climatemaster.com**.

Performance Data – TC H/V 048 (PSC Blower)

1,600 CFM Nominal (Rated) Airflow

Performance capacities shown in thousands of Btuh

EWT °F	GPM	WPD		Cooling - EAT 80/67°F							Heating - EAT 70°F					
		PSI	FT	Airflow CFM	TC	SC	Sens/Tot Ratio	kW	HR	EER	Airflow CFM	HC	kW	HE	LAT	COP
20	12.0	6.8	15.6	Operation not recommended							1200	30.9	3.54	19.6	94	2.56
	12.0	6.8	15.6								1600	31.6	3.18	20.9	88	2.92
30	6.0	1.8	4.1	1200	56.4	34.4	0.61	2.25	64.0	25.1	1200	33.9	3.60	22.3	96	2.76
	6.0	1.8	4.1	1600	58.8	39.0	0.66	2.34	66.7	25.1	1600	34.7	3.24	23.8	90	3.14
	9.0	3.4	7.8	1200	57.5	34.6	0.60	2.11	64.6	27.2	1200	34.4	3.63	22.7	97	2.78
	9.0	3.4	7.8	1600	59.8	39.1	0.65	2.20	67.2	27.2	1600	35.3	3.26	24.2	90	3.17
	12.0	6.2	14.3	1200	57.9	34.5	0.60	2.05	64.8	28.2	1200	35.1	3.65	23.3	97	2.82
	12.0	6.2	14.3	1600	60.3	39.1	0.65	2.14	67.5	28.2	1600	36.0	3.27	24.9	91	3.22
40	6.0	1.6	3.7	1200	54.8	34.0	0.62	2.47	63.2	22.2	1200	37.9	3.70	25.8	99	3.00
	6.0	1.6	3.7	1600	57.1	38.5	0.67	2.57	65.8	22.2	1600	38.8	3.33	27.5	92	3.42
	9.0	3.1	7.2	1200	56.0	34.3	0.61	2.31	63.8	24.3	1200	39.5	3.74	27.2	100	3.10
	9.0	3.1	7.2	1600	58.3	38.9	0.67	2.40	66.4	24.3	1600	40.5	3.36	29.1	93	3.53
	12.0	5.8	13.4	1200	56.6	34.5	0.61	2.23	64.1	25.4	1200	40.7	3.76	28.3	101	3.18
	12.0	5.8	13.4	1600	58.9	39.0	0.66	2.32	66.8	25.4	1600	41.7	3.37	30.2	94	3.62
50	6.0	1.5	3.4	1200	52.9	33.3	0.63	2.72	62.1	19.4	1200	43.6	3.81	31.0	104	3.36
	6.0	1.5	3.4	1600	55.1	37.7	0.68	2.83	64.7	19.4	1600	44.7	3.42	33.0	96	3.83
	9.0	3.0	6.8	1200	54.3	33.8	0.62	2.53	62.9	21.4	1200	44.9	3.85	32.1	105	3.42
	9.0	3.0	6.8	1600	56.5	38.3	0.68	2.64	65.5	21.4	1600	46.0	3.46	34.3	97	3.90
	12.0	5.5	12.7	1200	55.0	34.0	0.62	2.45	63.2	22.5	1200	46.0	3.87	33.1	106	3.49
	12.0	5.5	12.7	1600	57.2	38.5	0.67	2.55	65.8	22.5	1600	47.1	3.48	35.3	97	3.98
60	6.0	1.4	3.2	1200	50.7	32.5	0.64	3.02	61.0	16.8	1200	48.2	3.91	35.0	107	3.61
	6.0	1.4	3.2	1600	52.8	36.8	0.70	3.15	63.5	16.8	1600	49.3	3.51	37.4	99	4.11
	9.0	2.8	6.5	1200	52.3	33.1	0.63	2.81	61.8	18.6	1200	50.5	3.96	37.1	109	3.74
	9.0	2.8	6.5	1600	54.5	37.5	0.69	2.92	64.4	18.6	1600	51.8	3.56	39.6	100	4.26
	12.0	5.3	12.2	1200	53.0	33.4	0.63	2.70	62.2	19.6	1200	51.8	3.99	38.3	110	3.81
	12.0	5.3	12.2	1600	55.2	37.8	0.68	2.81	64.8	19.6	1600	53.1	3.58	40.9	101	4.34
70	6.0	1.3	3.0	1200	48.3	31.5	0.65	3.38	59.9	14.3	1200	53.5	4.02	39.8	111	3.90
	6.0	1.3	3.0	1600	50.3	35.7	0.71	3.52	62.3	14.3	1600	54.8	3.61	42.4	102	4.44
	9.0	2.7	6.3	1200	50.0	32.2	0.64	3.13	60.7	16.0	1200	56.2	4.08	42.2	113	4.03
	9.0	2.7	6.3	1600	52.1	36.4	0.70	3.25	63.2	16.0	1600	57.5	3.67	45.0	103	4.60
	12.0	5.1	11.8	1200	50.9	32.5	0.64	3.01	61.1	16.9	1200	57.6	4.12	43.4	114	4.10
	12.0	5.1	11.8	1600	53.0	36.8	0.70	3.13	63.6	16.9	1600	59.0	3.70	46.4	104	4.68
80	6.0	1.3	2.9	1200	45.7	30.5	0.67	3.79	58.6	12.1	1200	58.8	4.14	44.5	115	4.16
	6.0	1.3	2.9	1600	47.6	34.5	0.72	3.94	61.0	12.1	1600	60.2	3.72	47.5	105	4.74
	9.0	2.6	6.1	1200	47.5	31.2	0.66	3.50	59.5	13.6	1200	61.7	4.21	47.1	118	4.29
	9.0	2.6	6.1	1600	49.5	35.3	0.71	3.64	61.9	13.6	1600	63.2	3.78	50.2	107	4.90
	12.0	4.9	11.4	1200	48.4	31.6	0.65	3.37	59.9	14.4	1200	63.3	4.25	48.4	119	4.36
	12.0	4.9	11.4	1600	50.4	35.7	0.71	3.50	62.4	14.4	1600	64.8	3.82	51.7	107	4.97
85	6.0	1.2	2.8	1200	44.3	29.9	0.68	4.02	58.0	11.1	1200	61.3	4.20	46.7	117	4.28
	6.0	1.2	2.8	1600	46.1	33.8	0.73	4.19	60.4	11.1	1600	62.8	3.78	49.9	106	4.88
	9.0	2.6	6.0	1200	46.2	30.6	0.66	3.72	58.8	12.5	1200	64.3	4.28	49.4	120	4.40
	9.0	2.6	6.0	1600	48.1	34.7	0.72	3.87	61.3	12.5	1600	65.9	3.84	52.7	108	5.02
	12.0	4.9	11.3	1200	47.1	31.0	0.66	3.57	59.3	13.2	1200	65.9	4.32	50.7	121	4.47
	12.0	4.9	11.3	1600	49.0	35.1	0.72	3.72	61.7	13.2	1600	67.5	3.88	54.1	109	5.09
90	6.0	1.2	2.8	1200	42.9	29.3	0.68	4.26	57.4	10.1	1200	63.9	4.27	49.0	119	4.39
	6.0	1.2	2.8	1600	44.6	33.2	0.74	4.43	59.8	10.1	1600	65.5	3.83	52.3	108	5.01
	9.0	2.6	5.9	1200	44.8	30.1	0.67	3.93	58.2	11.4	1200	66.9	4.35	51.7	122	4.51
	9.0	2.6	5.9	1600	46.6	34.1	0.73	4.10	60.6	11.4	1600	68.6	3.91	55.1	110	5.14
	12.0	4.8	11.1	1200	45.7	30.5	0.67	3.78	58.6	12.1	1200	68.5	4.39	53.0	123	4.57
	12.0	4.8	11.1	1600	47.6	34.5	0.72	3.94	61.1	12.1	1600	70.2	3.95	56.6	111	5.21
100	6.0	1.2	2.7	1200	39.8	28.2	0.71	4.79	56.2	8.3	Operation not recommended					
	6.0	1.2	2.7	1600	41.4	31.9	0.77	4.99	58.5	8.3						
	9.0	2.5	5.8	1200	41.8	28.9	0.69	4.43	57.0	9.4						
	9.0	2.5	5.8	1600	43.5	32.7	0.75	4.62	59.3	9.4						
	12.0	4.7	10.9	1200	42.8	29.3	0.69	4.26	57.4	10.0						
	12.0	4.7	10.9	1600	44.6	33.2	0.74	4.44	59.7	10.0						
110	6.0	1.1	2.6	1200	36.5	26.9	0.74	5.40	55.0	6.8						
	6.0	1.1	2.6	1600	38.0	30.4	0.80	5.62	57.3	6.8						
	9.0	2.4	5.6	1200	38.6	27.7	0.72	5.00	55.8	7.7						
	9.0	2.4	5.6	1600	40.2	31.4	0.78	5.21	58.0	7.7						
	12.0	4.6	10.6	1200	39.7	28.1	0.71	4.81	56.1	8.2						
	12.0	4.6	10.6	1600	41.3	31.8	0.77	5.01	58.5	8.2						
120	6.0	1.1	2.5	1200	33.0	25.5	0.77	6.09	53.9	5.4						
	6.0	1.1	2.5	1600	34.4	28.9	0.84	6.34	56.1	5.4						
	9.0	2.4	5.5	1200	35.2	26.4	0.75	5.65	54.6	6.2						
	9.0	2.4	5.5	1600	36.7	29.9	0.81	5.88	56.8	6.2						
	12.0	4.5	10.4	1200	36.3	26.8	0.74	5.44	55.0	6.7						
	12.0	4.5	10.4	1600	37.8	30.3	0.80	5.66	57.2	6.7						

Interpolation is permissible; extrapolation is not.
All entering air conditions are 80°F DB and 67°F WB in cooling, and 70°F DB in heating.
AHRI/ISO certified conditions are 80.6°F DB and 66.2°F WB in cooling and 68°F DB in heating.
Table does not reflect fan or pump power corrections for AHRI/ISO conditions.
All performance is based upon the lower voltage of dual voltage rated units.
Performance stated is at the rated power supply; performance may vary as the power supply varies from the rated.
Operation below 40°F EWT is based upon a 15% methanol antifreeze solution.
Operation below 60°F EWT requires optional insulated water/refrigerant circuit.
See performance correction tables for operating conditions other than those listed above.
See Performance Data Selection Notes for operation in the shaded areas.

ClimateMaster works continually to improve its products. As a result, the design and specifications of each product at the time of order may be changed without notice and may not be as described herein. Please contact ClimateMaster's Customer Service Department at 1-405-745-6000 for specific information on the current design and specifications. Statements and other information contained herein are not express warranties and do not form the basis of any bargain between the parties, but are merely ClimateMaster's opinion or commendation of its products. The latest version of this document is available at **climatemaster.com**.

Performance Data – TC H/V 048 (ECM Blower)

1500 CFM Nominal (Rated) Airflow

Performance capacities shown in thousands of Btuh

EWT °F	GPM	WPD		Cooling - EAT 80/67°F							Heating - EAT 70°F					
		PSI	FT	Airflow CFM	TC	SC	Sens/Tot Ratio	kW	HR	EER	Airflow CFM	HC	kW	HE	LAT	COP
20	12.0	6.8	15.6	Operation not recommended							1200	31.4	3.45	19.6	92.0	2.7
	12.0	6.8	15.6								1500	31.5	3.09	20.9	87.0	3.0
30	6.0	1.8	4.1	1200	56.4	34.4	0.61	2.16	63.8	26.1	1200	34.3	3.51	22.3	95.0	2.9
	6.0	1.8	4.1	1500	58.8	39.0	0.66	2.25	66.5	26.1	1500	34.6	3.15	23.8	89.0	3.2
	9.0	3.4	7.8	1200	57.5	34.6	0.60	2.02	64.4	28.4	1200	34.8	3.54	22.7	96.0	2.9
	9.0	3.4	7.8	1500	59.8	39.1	0.65	2.11	67.0	28.3	1500	35.0	3.17	24.2	90.0	3.2
	12.0	6.2	14.3	1200	57.9	34.5	0.60	1.96	64.6	29.5	1200	35.5	3.56	23.3	97.0	2.9
	12.0	6.2	14.3	1500	60.3	39.1	0.65	2.05	67.3	29.4	1500	35.8	3.18	24.9	90.0	3.3
40	6.0	1.6	3.7	1200	54.8	34.0	0.62	2.38	62.9	23.0	1200	38.1	3.61	25.8	99.0	3.1
	6.0	1.6	3.7	1500	57.1	38.5	0.67	2.48	65.6	23.0	1500	38.6	3.24	27.5	92.0	3.5
	9.0	3.1	7.2	1200	56.0	34.3	0.61	2.22	63.6	25.2	1200	39.7	3.65	27.2	100.0	3.2
	9.0	3.1	7.2	1500	58.3	38.9	0.67	2.31	66.2	25.2	1500	40.3	3.27	29.1	93.0	3.6
	12.0	5.8	13.4	1200	56.6	34.5	0.61	2.14	63.9	26.4	1200	40.8	3.67	28.3	101.0	3.3
	12.0	5.8	13.4	1500	58.9	39.0	0.66	2.23	66.5	26.4	1500	41.4	3.28	30.2	94.0	3.7
50	6.0	1.5	3.4	1200	52.9	33.3	0.63	2.63	61.9	20.1	1200	43.7	3.72	31.0	103.0	3.4
	6.0	1.5	3.4	1500	55.1	37.7	0.68	2.74	64.5	20.1	1500	44.4	3.33	33.0	95.0	3.9
	9.0	3.0	6.8	1200	54.3	33.8	0.62	2.44	62.6	22.2	1200	44.9	3.76	32.1	104.0	3.5
	9.0	3.0	6.8	1500	56.5	38.3	0.68	2.55	65.2	22.1	1500	45.8	3.37	34.3	96.0	4.0
	12.0	5.5	12.7	1200	55.0	34.0	0.62	2.36	63.1	23.3	1200	46.0	3.78	33.1	105.0	3.6
	12.0	5.5	12.7	1500	57.2	38.5	0.67	2.46	65.6	23.2	1500	46.9	3.39	35.3	97.0	4.0
60	6.0	1.4	3.2	1200	50.7	32.5	0.64	2.93	60.7	17.3	1200	48.0	3.82	35.0	106.0	3.7
	6.0	1.4	3.2	1500	52.8	36.8	0.70	3.06	63.3	17.2	1500	49.1	3.42	37.4	98.0	4.2
	9.0	2.8	6.5	1200	52.3	33.1	0.63	2.72	61.6	19.2	1200	50.3	3.87	37.1	108.0	3.8
	9.0	2.8	6.5	1500	54.5	37.5	0.69	2.83	64.2	19.2	1500	51.5	3.47	39.6	99.0	4.3
	12.0	5.3	12.2	1200	53.0	33.4	0.63	2.61	61.9	20.3	1200	51.6	3.90	38.3	109.0	3.9
	12.0	5.3	12.2	1500	55.2	37.8	0.68	2.72	64.5	20.3	1500	52.8	3.49	40.9	100.0	4.4
70	6.0	1.3	3.0	1200	48.3	31.5	0.65	3.29	59.5	14.7	1200	53.2	3.93	39.8	110.0	4.0
	6.0	1.3	3.0	1500	50.3	35.7	0.71	3.43	62.0	14.6	1500	54.4	3.52	42.4	101.0	4.5
	9.0	2.7	6.3	1200	50.0	32.2	0.64	3.04	60.4	16.4	1200	55.8	3.99	42.2	112.0	4.1
	9.0	2.7	6.3	1500	52.1	36.4	0.70	3.16	62.9	16.5	1500	57.2	3.58	45.0	102.0	4.7
	12.0	5.1	11.8	1200	50.9	32.5	0.64	2.92	60.9	17.4	1200	57.2	4.03	43.4	113.0	4.2
	12.0	5.1	11.8	1500	53.0	36.8	0.69	3.04	63.4	17.4	1500	58.7	3.61	46.4	103.0	4.8
80	6.0	1.3	2.9	1200	45.7	30.5	0.67	3.70	58.3	12.3	1200	58.3	4.05	44.5	114.0	4.2
	6.0	1.3	2.9	1500	47.6	34.5	0.72	3.85	60.8	12.3	1500	59.9	3.63	47.5	104.0	4.8
	9.0	2.6	6.1	1200	47.5	31.2	0.66	3.41	59.2	13.9	1200	61.2	4.12	47.1	116.0	4.3
	9.0	2.6	6.1	1500	49.5	35.3	0.71	3.55	61.6	13.9	1500	62.8	3.69	50.2	105.0	5.0
	12.0	4.9	11.4	1200	48.4	31.6	0.65	3.28	59.6	14.7	1200	62.6	4.16	48.4	117.0	4.4
	12.0	4.9	11.4	1500	50.4	35.7	0.71	3.41	62.1	14.8	1500	64.4	3.73	51.7	106.0	5.1
85	6.0	1.2	2.8	1200	44.3	29.9	0.67	3.93	57.7	11.3	1200	60.7	4.11	46.7	116.0	4.3
	6.0	1.2	2.8	1500	46.1	33.8	0.73	4.10	60.1	11.2	1500	62.5	3.69	49.9	105.0	5.0
	9.0	2.6	6.0	1200	46.2	30.6	0.66	3.63	58.6	12.7	1200	63.7	4.19	49.4	118.0	4.5
	9.0	2.6	6.0	1500	48.1	34.7	0.72	3.78	61.0	12.7	1500	65.5	3.75	52.7	107.0	5.1
	12.0	4.9	11.3	1200	47.1	31.0	0.66	3.48	59.0	13.5	1200	65.1	4.23	50.7	119.0	4.5
	12.0	4.9	11.3	1500	49.0	35.1	0.72	3.63	61.4	13.5	1500	67.0	3.79	54.1	108.0	5.2
90	6.0	1.2	2.8	1200	42.9	29.3	0.68	4.17	57.1	10.3	1200	63.3	4.18	49.0	117.0	4.4
	6.0	1.2	2.8	1500	44.6	33.2	0.74	4.34	59.4	10.3	1500	65.1	3.74	52.3	107.0	5.1
	9.0	2.6	5.9	1200	44.8	30.1	0.67	3.84	57.9	11.7	1200	66.3	4.26	51.7	120.0	4.6
	9.0	2.6	5.9	1500	46.6	34.1	0.73	4.01	60.3	11.6	1500	68.1	3.82	55.1	108.0	5.2
	12.0	4.8	11.1	1200	45.7	30.5	0.67	3.69	58.3	12.4	1200	67.7	4.30	53.0	121.0	4.6
	12.0	4.8	11.1	1500	47.6	34.5	0.72	3.85	60.8	12.3	1500	69.8	3.86	56.6	109.0	5.3
100	6.0	1.2	2.7	1200	39.8	28.2	0.71	4.70	55.9	8.5	Operation not recommended					
	6.0	1.2	2.7	1500	41.4	31.9	0.77	4.90	58.1	8.4						
	9.0	2.5	5.8	1200	41.8	28.9	0.69	4.34	56.6	9.6						
	9.0	2.5	5.8	1500	43.5	32.7	0.75	4.53	59.0	9.6						
	12.0	4.7	10.9	1200	42.8	29.3	0.68	4.17	57.0	10.3						
	12.0	4.7	10.9	1500	44.6	33.2	0.74	4.35	59.5	10.2						
110	6.0	1.1	2.6	1200	36.5	26.9	0.74	5.31	54.6	6.9						
	6.0	1.1	2.6	1500	38.0	30.4	0.80	5.53	56.9	6.9						
	9.0	2.4	5.6	1200	38.6	27.7	0.72	4.91	55.4	7.9						
	9.0	2.4	5.6	1500	40.2	31.4	0.78	5.12	57.7	7.8						
	12.0	4.6	10.6	1200	39.7	28.1	0.71	4.72	55.8	8.4						
	12.0	4.6	10.6	1500	41.3	31.8	0.77	4.92	58.1	8.4						
120	6.0	1.1	2.5	1200	33.0	25.5	0.77	6.00	53.5	5.5						
	6.0	1.1	2.5	1500	34.4	28.9	0.84	6.25	55.7	5.5						
	9.0	2.4	5.5	1200	35.2	26.4	0.75	5.56	54.2	6.3						
	9.0	2.4	5.5	1500	36.7	29.9	0.81	5.79	56.5	6.3						
	12.0	4.5	10.4	1200	36.3	26.8	0.74	5.35	54.6	6.8						
	12.0	4.5	10.4	1500	37.8	30.3	0.80	5.57	56.8	6.8						

Interpolation is permissible; extrapolation is not.
All entering air conditions are 80°F DB and 67°F WB in cooling, and 70°F DB in heating.
AHRI/ISO certified conditions are 80.6°F DB and 66.2°F WB in cooling and 68°F DB in heating.
Table does not reflect fan or pump power corrections for AHRI/ISO conditions.
All performance is based upon the lower voltage of dual voltage rated units.
Performance stated is at the rated power supply; performance may vary as the power supply varies from the rated.
Operation below 40°F EWT is based upon a 15% methanol antifreeze solution.
Operation below 60°F EWT requires optional insulated water/refrigerant circuit.
See performance correction tables for operating conditions other than those listed above.
See Performance Data Selection Notes for operation in the shaded areas.

ClimateMaster works continually to improve its products. As a result, the design and specifications of each product at the time of order may be changed without notice and may not be as described herein. Please contact ClimateMaster's Customer Service Department at 1-405-745-6000 for specific information on the current design and specifications. Statements and other information contained herein are not express warranties and do not form the basis of any bargain between the parties, but are merely ClimateMaster's opinion or commendation of its products. The latest version of this document is available at **climatemaster.com**.

Performance Data – TC H/V 060 (PSC Blower)

1950 CFM Nominal (Rated) Airflow

Performance capacities shown in thousands of Btuh

EWT °F	GPM	WPD		Cooling - EAT 80/67°F							Heating - EAT 70°F					
		PSI	FT	Airflow CFM	TC	SC	Sens/Tot Ratio	kW	HR	EER	Airflow CFM	HC	kW	HE	LAT	COP
20	15.0	14.0	32.2	Operation not recommended							1460	41.6	4.98	25.8	96	2.45
	15.0	14.0	32.2								1950	42.6	4.48	27.5	90	2.79
30	7.5	3.4	7.9	1460	68.2	41.6	0.61	3.00	78.3	22.8	1460	45.5	5.08	29.2	99	2.62
	7.5	3.4	7.9	1950	71.0	47.0	0.66	3.12	81.6	22.8	1950	46.6	4.56	31.1	92	2.99
	11.3	6.8	15.8	1460	69.0	41.5	0.60	2.87	78.7	24.0	1460	47.4	5.13	30.9	100	2.71
	11.3	6.8	15.8	1950	71.8	47.0	0.65	2.99	82.0	24.0	1950	48.6	4.61	33.0	93	3.09
	15.0	12.6	29.2	1460	69.3	41.3	0.60	2.82	78.8	24.6	1460	48.5	5.16	31.8	101	2.75
	15.0	12.6	29.2	1950	72.1	46.8	0.65	2.94	82.1	24.6	1950	49.7	4.64	34.0	94	3.14
40	7.5	3.1	7.0	1460	66.6	41.1	0.62	3.21	77.4	20.8	1460	52.2	5.27	35.1	103	2.91
	7.5	3.1	7.0	1950	69.3	46.5	0.67	3.34	80.6	20.8	1950	53.5	4.73	37.5	95	3.31
	11.3	6.3	14.6	1460	67.8	41.5	0.61	3.05	78.1	22.2	1460	54.8	5.34	37.3	105	3.01
	11.3	6.3	14.6	1950	70.6	47.0	0.67	3.18	81.3	22.2	1950	56.1	4.80	39.8	97	3.43
	15.0	11.8	27.2	1460	68.3	41.6	0.61	2.98	78.4	22.9	1460	56.2	5.38	38.5	106	3.06
	15.0	11.8	27.2	1950	71.1	47.0	0.66	3.10	81.6	22.9	1950	57.5	4.83	41.1	97	3.49
50	7.5	2.8	6.4	1460	64.7	40.3	0.62	3.47	76.4	18.7	1460	59.5	5.48	41.4	108	3.18
	7.5	2.8	6.4	1950	67.3	45.6	0.68	3.61	79.6	18.7	1950	60.9	4.92	44.2	99	3.63
	11.3	5.9	13.7	1460	66.0	40.9	0.62	3.28	77.1	20.1	1460	62.6	5.57	44.1	110	3.29
	11.3	5.9	13.7	1950	68.7	46.3	0.67	3.41	80.3	20.1	1950	64.1	5.01	47.1	100	3.75
	15.0	11.1	25.7	1460	66.7	41.2	0.62	3.19	77.5	20.9	1460	64.3	5.63	45.6	111	3.35
	15.0	11.1	25.7	1950	69.4	46.6	0.67	3.32	80.7	20.9	1950	65.9	5.05	48.7	101	3.82
60	7.5	2.6	6.0	1460	62.4	39.3	0.63	3.78	75.3	16.5	1460	66.9	5.70	47.8	112	3.44
	7.5	2.6	6.0	1950	65.0	44.5	0.69	3.93	78.4	16.5	1950	68.5	5.12	51.0	103	3.92
	11.3	5.6	13.0	1460	63.7	39.9	0.63	3.56	75.8	17.9	1460	70.4	5.82	50.9	115	3.55
	11.3	5.6	13.0	1950	66.3	45.1	0.68	3.70	78.9	17.9	1950	72.1	5.22	54.4	104	4.05
	15.0	10.7	24.6	1460	64.2	40.0	0.62	3.45	75.9	18.6	1460	72.4	5.88	52.6	116	3.61
	15.0	10.7	24.6	1950	66.8	45.3	0.68	3.59	79.0	18.6	1950	74.1	5.28	56.2	105	4.12
70	7.5	2.4	5.6	1460	59.6	38.0	0.64	4.15	73.7	14.3	1460	74.2	5.93	54.1	117	3.66
	7.5	2.4	5.6	1950	62.0	43.0	0.69	4.32	76.7	14.3	1950	75.9	5.33	57.8	106	4.18
	11.3	5.4	12.5	1460	61.1	38.6	0.63	3.89	74.3	15.7	1460	78.0	6.05	57.5	119	3.78
	11.3	5.4	12.5	1950	63.6	43.7	0.69	4.05	77.4	15.7	1950	79.9	5.44	61.4	108	4.31
	15.0	10.3	23.7	1460	61.6	38.8	0.63	3.77	74.4	16.3	1460	80.1	6.12	59.2	121	3.84
	15.0	10.3	23.7	1950	64.2	43.9	0.68	3.92	77.5	16.3	1950	82.0	5.50	63.2	109	4.37
80	7.5	2.3	5.4	1460	56.4	36.7	0.65	4.59	72.1	12.3	1460	81.1	6.15	60.1	121	3.86
	7.5	2.3	5.4	1950	58.8	41.5	0.71	4.78	75.1	12.3	1950	83.0	5.52	64.2	109	4.41
	11.3	5.2	12.0	1460	58.1	37.3	0.64	4.29	72.7	13.5	1460	84.9	6.27	63.4	124	3.97
	11.3	5.2	12.0	1950	60.4	42.2	0.70	4.47	75.7	13.5	1950	87.0	5.63	67.7	111	4.52
	15.0	9.9	22.9	1460	58.7	37.5	0.64	4.15	72.8	14.1	1460	86.9	6.33	65.1	125	4.02
	15.0	9.9	22.9	1950	61.1	42.4	0.69	4.32	75.8	14.1	1950	89.0	5.69	69.5	112	4.58
85	7.5	2.3	5.2	1460	54.8	36.1	0.66	4.84	71.3	11.4	1460	84.1	6.25	62.8	123	3.95
	7.5	2.3	5.2	1950	57.0	40.8	0.72	5.04	74.2	11.4	1950	86.2	5.6	67.0	111	4.50
	11.3	5.1	11.8	1460	56.4	36.6	0.65	4.52	71.9	12.5	1460	87.8	6.4	65.9	126	4.04
	11.3	5.1	11.8	1950	58.7	41.4	0.70	4.71	74.8	12.5	1950	89.9	5.7	70.4	113	4.61
	15.0	9.8	22.6	1460	57.1	36.8	0.64	4.37	72.0	13.1	1460	89.6	6.4	67.5	127	4.09
	15.0	9.8	22.6	1950	59.5	41.6	0.70	4.55	75.0	13.1	1950	91.8	5.8	72.0	114	4.66
90	7.5	2.2	5.1	1460	53.1	35.4	0.67	5.09	70.5	10.4	1460	87.2	6.35	65.4	125	4.03
	7.5	2.2	5.1	1950	55.3	40.1	0.73	5.30	73.4	10.4	1950	89.3	5.70	69.9	112	4.59
	11.3	5.0	11.6	1460	54.8	35.9	0.66	4.76	71.0	11.5	1460	90.7	6.45	68.4	128	4.12
	11.3	5.0	11.6	1950	57.1	40.7	0.71	4.95	74.0	11.5	1950	92.9	5.80	73.1	114	4.70
	15.0	9.6	22.2	1460	55.5	36.1	0.65	4.60	71.2	12.1	1460	92.3	6.50	69.8	129	4.16
	15.0	9.6	22.2	1950	57.8	40.9	0.71	4.78	74.1	12.1	1950	94.5	5.84	74.5	115	4.74
100	7.5	2.1	4.9	1460	49.6	34.3	0.69	5.67	69.0	8.8	Operation not recommended					
	7.5	2.1	4.9	1950	51.7	38.9	0.75	5.90	71.9	8.8						
	11.3	4.9	11.3	1460	51.4	34.7	0.68	5.29	69.5	9.7						
	11.3	4.9	11.3	1950	53.5	39.3	0.73	5.51	72.3	9.7						
	15.0	9.4	21.7	1460	52.1	34.8	0.67	5.11	69.6	10.2						
	15.0	9.4	21.7	1950	54.2	39.4	0.73	5.32	72.4	10.2						
110	7.5	2.0	4.7	1460	46.6	33.8	0.73	6.33	68.2	7.4						
	7.5	2.0	4.7	1950	48.5	38.2	0.79	6.59	71.0	7.4						
	11.3	4.8	11.0	1460	47.8	33.6	0.70	5.91	68.0	8.1						
	11.3	4.8	11.0	1950	49.8	38.1	0.76	6.15	70.8	8.1						
	15.0	9.2	21.2	1460	48.6	33.7	0.69	5.71	68.2	8.5						
	15.0	9.2	21.2	1950	50.6	38.2	0.75	5.94	71.0	8.5						
120	7.5	2.0	4.6	1460	43.0	33.1	0.77	7.07	67.2	6.1						
	7.5	2.0	4.6	1950	44.7	37.5	0.84	7.36	70.0	6.1						
	11.3	4.7	10.7	1460	44.2	32.8	0.74	6.61	66.8	6.7						
	11.3	4.7	10.7	1950	46.0	37.1	0.81	6.88	69.6	6.7						
	15.0	9.0	20.7	1460	44.9	32.7	0.73	6.38	66.8	7.0						
	15.0	9.0	20.7	1950	46.8	37.0	0.79	6.64	69.5	7.0						

Interpolation is permissible; extrapolation is not.
All entering air conditions are 80°F DB and 67°F WB in cooling, and 70°F DB in heating.
AHRI/ISO certified conditions are 80.6°F DB and 66.2°F WB in cooling and 68°F DB in heating.
Table does not reflect fan or pump power corrections for AHRI/ISO conditions.
All performance is based upon the lower voltage of dual voltage rated units.
Performance stated is at the rated power supply; performance may vary as the power supply varies from the rated.
Operation below 40°F EWT is based upon a 15% methanol antifreeze solution.
Operation below 60°F EWT requires optional insulated water/refrigerant circuit.
See performance correction tables for operating conditions other than those listed above.
See Performance Data Selection Notes for operation in the shaded areas.

ClimateMaster works continually to improve its products. As a result, the design and specifications of each product at the time of order may be changed without notice and may not be as described herein. Please contact ClimateMaster's Customer Service Department at 1-405-745-6000 for specific information on the current design and specifications. Statements and other information contained herein are not express warranties and do not form the basis of any bargain between the parties, but are merely ClimateMaster's opinion or commendation of its products. The latest version of this document is available at **climatemaster.com**.

Performance Data – TC H/V 060 (ECM Blower)

1950 CFM Nominal (Rated) Airflow

Performance capacities shown in thousands of Btuh

EWT °F	GPM	WPD		Cooling - EAT 80/67°F							Heating - EAT 70°F					
		PSI	FT	Airflow CFM	TC	SC	Sens/Tot Ratio	kW	HR	EER	Airflow CFM	HC	kW	HE	LAT	COP
20	15.0	14.0	32.2	Operation not recommended							1460	42.0	4.7	25.8	92.0	2.6
	15.0	14.0	32.2								1950	42.0	4.2	27.5	87.0	2.9
30	7.5	3.4	7.9	1460	68.2	41.6	0.61	2.8	77.6	24.8	1460	45.7	4.8	29.2	95.0	2.8
	7.5	3.4	7.9	1950	71.0	47.0	0.66	2.9	80.8	24.7	1950	45.8	4.3	31.1	89.0	3.1
	11.3	6.8	15.8	1460	69.0	41.5	0.60	2.6	78.0	26.3	1460	47.6	4.9	30.9	96.0	2.9
	11.3	6.8	15.8	1950	71.8	47.0	0.65	2.7	81.2	26.2	1950	47.9	4.4	33.0	90.0	3.2
	15.0	12.6	29.2	1460	69.3	41.3	0.60	2.6	78.1	26.9	1460	48.6	4.9	31.8	97.0	2.9
	15.0	12.6	29.2	1950	72.1	46.8	0.65	2.7	81.3	26.7	1950	49.0	4.4	34.0	90.0	3.3
40	7.5	3.1	7.0	1460	66.6	41.1	0.62	3.0	76.7	22.5	1460	52.2	5.0	35.1	99.0	3.0
	7.5	3.1	7.0	1950	69.3	46.5	0.67	3.1	79.9	22.4	1950	52.8	4.5	37.5	92.0	3.5
	11.3	6.3	14.6	1460	67.8	41.5	0.61	2.8	77.4	24.2	1460	54.7	5.1	37.3	100.0	3.1
	11.3	6.3	14.6	1950	70.6	47.0	0.67	2.9	80.6	24.1	1950	55.3	4.6	39.8	93.0	3.6
	15.0	11.8	27.2	1460	68.3	41.6	0.61	2.7	77.6	25.0	1460	56.0	5.1	38.5	101.0	3.2
	15.0	11.8	27.2	1950	71.1	47.0	0.66	2.9	80.8	24.9	1950	56.7	4.6	41.1	94.0	3.6
50	7.5	2.8	6.4	1460	64.7	40.3	0.62	3.2	75.7	20.1	1460	59.3	5.2	41.4	103.0	3.3
	7.5	2.8	6.4	1950	67.3	45.6	0.68	3.4	78.8	20.0	1950	60.2	4.7	44.2	95.0	3.8
	11.3	5.9	13.7	1460	66.0	40.9	0.62	3.0	76.4	21.7	1460	62.3	5.3	44.1	104.0	3.4
	11.3	5.9	13.7	1950	68.7	46.3	0.67	3.2	79.5	21.7	1950	63.4	4.8	47.1	96.0	3.9
	15.0	11.1	25.7	1460	66.7	41.2	0.62	2.9	76.7	22.6	1460	64.0	5.4	45.6	105.0	3.5
	15.0	11.1	25.7	1950	69.4	46.6	0.67	3.1	79.9	22.6	1950	65.1	4.8	48.7	97.0	4.0
60	7.5	2.6	6.0	1460	62.4	39.3	0.63	3.5	74.5	17.7	1460	66.4	5.5	47.8	106.0	3.6
	7.5	2.6	6.0	1950	65.0	44.5	0.68	3.7	77.6	17.6	1950	67.6	4.9	51.0	98.0	4.1
	11.3	5.6	13.0	1460	63.7	39.9	0.63	3.3	75.0	19.2	1460	69.9	5.6	50.9	108.0	3.7
	11.3	5.6	13.0	1950	66.3	45.1	0.68	3.5	78.1	19.2	1950	71.4	5.0	54.4	99.0	4.2
	15.0	10.7	24.6	1460	64.2	40.0	0.62	3.2	75.1	20.0	1460	71.8	5.6	52.6	109.0	3.7
	15.0	10.7	24.6	1950	66.8	45.3	0.68	3.3	78.2	20.0	1950	73.4	5.0	56.2	100.0	4.3
70	7.5	2.4	5.6	1460	59.6	38.0	0.64	3.9	72.9	15.3	1460	73.5	5.7	54.1	110.0	3.8
	7.5	2.4	5.6	1950	62.0	43.0	0.69	4.1	75.9	15.2	1950	75.2	5.1	57.8	101.0	4.3
	11.3	5.4	12.5	1460	61.1	38.6	0.63	3.6	73.5	16.8	1460	77.3	5.8	57.5	112.0	3.9
	11.3	5.4	12.5	1950	63.6	43.7	0.69	3.8	76.6	16.7	1950	79.1	5.2	61.4	102.0	4.5
	15.0	10.3	23.7	1460	61.6	38.8	0.63	3.5	73.6	17.5	1460	79.2	5.9	59.2	113.0	4.0
	15.0	10.3	23.7	1950	64.2	43.9	0.68	3.7	76.7	17.5	1950	81.1	5.3	63.2	103.0	4.5
80	7.5	2.3	5.4	1460	56.4	36.7	0.65	4.3	71.2	13.0	1460	80.2	5.9	60.1	114.0	4.0
	7.5	2.3	5.4	1950	58.8	41.5	0.71	4.5	74.3	13.0	1950	82.2	5.3	64.2	104.0	4.6
	11.3	5.2	12.0	1460	58.1	37.3	0.64	4.0	71.9	14.4	1460	84.0	6.0	63.4	116.0	4.1
	11.3	5.2	12.0	1950	60.4	42.2	0.70	4.2	74.8	14.3	1950	86.1	5.4	67.7	105.0	4.7
	15.0	9.9	22.9	1460	58.7	37.5	0.64	3.9	72.0	15.0	1460	85.9	6.1	65.1	117.0	4.1
	15.0	9.9	22.9	1950	61.1	42.4	0.69	4.1	75.0	15.0	1950	88.1	5.4	69.5	106.0	4.7
85	7.5	2.3	5.2	1460	54.8	36.1	0.66	4.6	70.5	11.9	1460	83.3	6.0	62.8	116.0	4.1
	7.5	2.3	5.2	1950	57.0	40.8	0.72	4.8	73.4	11.9	1950	85.3	5.4	67.0	105.0	4.7
	11.3	5.1	11.8	1460	56.4	36.6	0.65	4.3	71.0	13.2	1460	86.9	6.2	65.9	118.0	4.1
	11.3	5.1	11.8	1950	58.7	41.4	0.71	4.5	73.9	13.1	1950	89.0	5.5	70.4	107.0	4.8
	15.0	9.8	22.6	1460	57.1	36.8	0.64	4.1	71.2	13.8	1460	88.5	6.2	67.5	119.0	4.2
	15.0	9.8	22.6	1950	59.5	41.6	0.70	4.3	74.2	13.8	1950	91.0	5.6	72.0	108.0	4.8
90	7.5	2.2	5.1	1460	53.1	35.4	0.67	4.8	69.6	11.0	1460	86.2	6.1	65.4	117.0	4.1
	7.5	2.2	5.1	1950	55.3	40.1	0.73	5.1	72.5	10.9	1950	88.5	5.5	69.9	107.0	4.8
	11.3	5.0	11.6	1460	54.8	35.9	0.66	4.5	70.2	12.1	1460	89.6	6.2	68.4	120.0	4.2
	11.3	5.0	11.6	1950	57.1	40.7	0.71	4.7	73.2	12.1	1950	92.1	5.6	73.1	108.0	4.9
	15.0	9.6	22.2	1460	55.5	36.1	0.65	4.4	70.4	12.7	1460	91.1	6.3	69.8	121.0	4.3
	15.0	9.6	22.2	1950	57.8	40.9	0.71	4.5	73.3	12.7	1950	93.6	5.6	74.5	109.0	4.9
100	7.5	2.1	4.9	1460	49.6	34.3	0.69	5.4	68.1	9.1	Operation not recommended					
	7.5	2.1	4.9	1950	51.7	38.9	0.75	5.7	71.0	9.1						
	11.3	4.9	11.3	1460	51.4	34.7	0.68	5.0	68.6	10.2						
	11.3	4.9	11.3	1950	53.5	39.3	0.73	5.3	71.5	10.2						
	15.0	9.4	21.7	1460	52.1	34.8	0.67	4.9	68.7	10.7						
	15.0	9.4	21.7	1950	54.2	39.4	0.73	5.1	71.5	10.7						
110	7.5	2.0	4.7	1460	46.6	33.8	0.73	6.1	67.4	7.7						
	7.5	2.0	4.7	1950	48.5	38.2	0.79	6.3	70.2	7.6						
	11.3	4.8	11.0	1460	47.8	33.6	0.70	5.7	67.1	8.4						
	11.3	4.8	11.0	1950	49.8	38.1	0.77	5.9	69.9	8.4						
	15.0	9.2	21.2	1460	48.6	33.7	0.69	5.5	67.2	8.9						
	15.0	9.2	21.2	1950	50.6	38.2	0.75	5.7	70.0	8.9						
120	7.5	2.0	4.6	1460	43.0	33.1	0.77	6.8	66.3	6.3						
	7.5	2.0	4.6	1950	44.7	37.5	0.84	7.1	69.0	6.3						
	11.3	4.7	10.7	1460	44.2	32.8	0.74	6.4	65.9	6.9						
	11.3	4.7	10.7	1950	46.0	37.1	0.81	6.6	68.6	6.9						
	15.0	9.0	20.7	1460	44.9	32.7	0.73	6.1	65.8	7.3						
	15.0	9.0	20.7	1950	46.8	37.0	0.79	6.4	68.6	7.3						

Interpolation is permissible; extrapolation is not.
All entering air conditions are 80°F DB and 67°F WB in cooling, and 70°F DB in heating.
AHRI/ISO certified conditions are 80.6°F DB and 66.2°F WB in cooling and 68°F DB in heating.
Table does not reflect fan or pump power corrections for AHRI/ISO conditions.
All performance is based upon the lower voltage of dual voltage rated units.
Performance stated is at the rated power supply; performance may vary as the power supply varies from the rated.
Operation below 40°F EWT is based upon a 15% methanol antifreeze solution.
Operation below 60°F EWT requires optional insulated water/refrigerant circuit.
See performance correction tables for operating conditions other than those listed above.
See Performance Data Selection Notes for operation in the shaded areas.

ClimateMaster works continually to improve its products. As a result, the design and specifications of each product at the time of order may be changed without notice and may not be as described herein. Please contact ClimateMaster's Customer Service Department at 1-405-745-6000 for specific information on the current design and specifications. Statements and other information contained herein are not express warranties and do not form the basis of any bargain between the parties, but are merely ClimateMaster's opinion or commendation of its products. The latest version of this document is available at **climatemaster.com**.

Entering Air Correction Table - Cooling

Cooling Corrections											
Ent Air WB °F	Total Clg Cap	Sens Clg Cap Multipliers - Entering DB °F								Power	Heat of Rejection
		65	70	75	80	80.6	85	90	95		
50	0.7800	0.9778	*	*	*	*	*	*	*	0.9972	0.8243
55	0.8327	0.8966	1.0556	*	*	*	*	*	*	0.9980	0.8667
60	0.8954	0.7505	0.9184	1.1056	*	*	*	*	*	0.9988	0.9169
65	0.9681		0.6778	0.8992	1.1213	1.1480	1.3439	*	*	0.9996	0.9747
66.2	0.9871		0.6103	0.8420	1.0698	1.0969	1.2938	*	*	0.9999	0.9897
67	1.0000		0.5507	0.7782	1.0000	1.0262	1.2161	1.4266	*	1.0000	1.0000
70	1.0508			0.6408	0.8856	0.9135	1.1082	1.3087	1.4869	1.0005	1.0403
75	1.1435	Operation not recommended			0.6085	0.6403	0.8566	1.0663	1.2376	1.0014	1.1135

* Sensible capacity equals total capacity.
AHRI/ISO/ASHRAE 13256-1 uses entering air conditions of Cooling - 80.6°F DB/ 66.2°F WB, and Heating -68°F DB/ 59°F WB entering air temperature.

Entering Air Correction Table - Heating

Heating Corrections			
Ent Air DB °F	Heating Capacity	Heating Power	Heat of Extraction
45	1.0507	0.7802	1.1314
50	1.0327	0.8227	1.0953
55	1.0195	0.8683	1.0646
60	1.0102	0.9168	1.0380
65	1.0033	0.9680	1.0139
68	1.0000	1.0000	1.0000
70	0.9979	1.0218	0.9908
75	0.9928	1.0781	0.9673
80	0.9866	1.1367	0.9419

Air Flow Correction Table

Airflow	Heating			Cooling				
% of Rated	Heating Capacity	Heating Power	Heat of Extraction	Total Capacity	Sensible Capacity	Sens/Total Ratio	Power	Heat of Rejection
75	0.9764	1.1134	0.9368	0.9605	0.8837	0.9200	0.9606	0.9605
81.25	0.9829	1.0789	0.9551	0.9730	0.9130	0.9384	0.9691	0.9722
87.5	0.9889	1.0484	0.9717	0.9837	0.9393	0.9548	0.9784	0.9826
93.75	0.9947	1.0222	0.9867	0.9927	0.9668	0.9739	0.9887	0.9919
100	1.0000	1.0000	1.0000	1.0000	1.0000	1.0000	1.0000	1.0000
106.25	1.0050	0.9820	1.0116	1.0055	1.0434	1.0377	1.0122	1.0069
112.5	1.0096	0.9681	1.0216	1.0093	1.1016	1.0915	1.0253	1.0126
118.75	1.0138	0.9583	1.0299	1.0113	1.1790	1.1658	1.0394	1.0171
125	1.0177	0.9527	1.0365	1.0116	1.2798	1.2652	1.0544	1.0204

ClimateMaster works continually to improve its products. As a result, the design and specifications of each product at the time of order may be changed without notice and may not be as described herein. Please contact ClimateMaster's Customer Service Department at 1-405-745-6000 for specific information on the current design and specifications. Statements and other information contained herein are not express warranties and do not form the basis of any bargain between the parties, but are merely ClimateMaster's opinion or commendation of its products. The latest version of this document is available at **climatemaster.com**.

Antifreeze Correction Table

Antifreeze Type	Antifreeze %	Cooling EWT 90°F			Heating EWT 30°F		WPD Corr. Fct. EWT 30°F
		Total Cap	Sens Cap	Power	Htg Cap	Power	
Water	0	1.000	1.000	1.000	1.000	1.000	1.000
Propylene Glycol	5	0.995	0.995	1.003	0.989	0.997	1.070
	15	0.986	0.986	1.009	0.968	0.990	1.210
	25	0.978	0.978	1.014	0.947	0.983	1.360
Methanol	5	0.997	0.997	1.002	0.989	0.997	1.070
	15	0.990	0.990	1.007	0.968	0.990	1.160
	25	0.982	0.982	1.012	0.949	0.984	1.220
Ethanol	5	0.998	0.998	1.002	0.981	0.994	1.140
	15	0.994	0.994	1.005	0.944	0.983	1.300
	25	0.986	0.986	1.009	0.917	0.974	1.360
Ethylene Glycol	5	0.998	0.998	1.002	0.993	0.998	1.040
	15	0.994	0.994	1.004	0.980	0.994	1.120
	25	0.988	0.988	1.008	0.966	0.990	1.200

ClimateMaster works continually to improve its products. As a result, the design and specifications of each product at the time of order may be changed without notice and may not be as described herein. Please contact ClimateMaster's Customer Service Department at 1-405-745-6000 for specific information on the current design and specifications. Statements and other information contained herein are not express warranties and do not form the basis of any bargain between the parties, but are merely ClimateMaster's opinion or commendation of its products. The latest version of this document is available at **climatemaster.com**.

Blower Performance Data – Standard Unit – PSC

Airflow in CFM with wet coil and clean air filter

Model	Fan Speed	Rated Airflow	Min CFM	Airflow (cfm) at External Static Pressure (in. wg)															
				0.00	0.05	0.10	0.15	0.20	0.25	0.30	0.35	0.40	0.45	0.50	0.60	0.70	0.80	0.90	1.00
TCH/V 006	HI	220	150			310	300	290	280	270	250	230	210	180	Operation not recommended				
	MED					260	250	240	230	210	200	190	150						
	LOW					210	200	190	180	160	150								
TCH/V 009	HI	325	225			410	400	380	360	350	330	320	300	280					
	MED					390	370	360	340	320	310	290	280	260					
	LOW					340	330	322	310	300	280	260	250						
TCH/V 012	HI	400	300			470	460	450	440	430	420	400	390	380	320				
	MED					420	410	400	390	380	370	360	350	340					
	LOW					360	360	350	340	320	320	310	300						
TCH/V 015	HI	525	375			745	725	706	696	686	666	637	588	539	451				
	MED			686	676	666	657	647	637	617	608	588	549	510					
	LOW			608	598	588	578	568	559	549	529	510	480	451					
TCH/V 018	HI	600	450			745	725	706	696	686	666	637	588	539	451				
	MED			686	676	666	657	647	637	617	608	588	549	510					
	LOW			608	598	588	578	568	559	549	529	510	480	451					
TCH/V 024	HI	800	600									950	922	884	827	732	656		
	MED			960	950	941	931	912	893	874	855	836	817	789	732	665			
	LOW			779	770	760	751	741	732	722	713	694	684	665	618				
TCH/V 030	HI	1000	750							1102	1074	1045	1017	979	903	798			
	MED			1188	1169	1140	1121	1093	1064	1036	1017	988	960	922	846				
	LOW			1064	1045	1017	998	979	960	931	912	884	855	827	751				
TCH/V 036	HI	1200	900	1474	1455	1436	1416	1387	1358	1329	1310	1280	1232	1174	1077	931			
	MED			1174	1164	1106	1106	1096	1096	1086	1077	1067	1038	1009	912				
	LOW			980	980	970	970	960	960	951	951	941	922	902					
TCV 041	HI	1125	845	1328	1300	1269	1235	1198	1157	1114	1037	1018	965						
	MED			1181	1164	1142	1118	1090	1058	1023	985								
	LOW			1031	1021	1008	991	971	947										
TCH/V 042	HI	1350	1050	1558	1530	1501	1473	1444	1416	1378	1340	1302	1264	1226	1131				
	MED			1416	1397	1368	1349	1321	1302	1273	1245	1207	1169	1131	1064				
	LOW			1083	1083	1074	1074	1064	1055										
TCH/V 048	HI	1600	1200					1881	1853	1815	1767	1710	1653	1596	1416	1216	1216		
	MED			1843	1824	1805	1786	1767	1729	1682	1653	1625	1577	1520	1340				
	LOW			1682	1663	1644	1625	1606	1587	1568	1530	1492	1435	1378	1264				
TCH/V 060	HI	2000	1500	2195	2195	2185	2176	2156	2117	2078	2048	2019	1999	1970	1921	1842	1754	1627	
	MED			2009	2009	1999	1980	1950	1931	1901	1882	1852	1823	1793	1744	1676	1588		
	LOW			1813	1813	1803	1793	1774	1764	1744	1725	1695	1666	1637	1568				

Black areas denote ESP where operation is not recommended.
Units factory shipped on medium speed. Other speeds require field selection.
All airflow is rated and shown above at the lower voltage if unit is dual voltage rated, e.g. 208V for 208-230V units.
Only two speed fan (H & M) available on 575V units.
Performance stated is at the rated power supply, performance may vary as the power supply varies from the rated.

ClimateMaster works continually to improve its products. As a result, the design and specifications of each product at the time of order may be changed without notice and may not be as described herein. Please contact ClimateMaster's Customer Service Department at 1-405-745-6000 for specific information on the current design and specifications. Statements and other information contained herein are not express warranties and do not form the basis of any bargain between the parties, but are merely ClimateMaster's opinion or commendation of its products. The latest version of this document is available at **climatemaster.com**.

Blower Performance Data – High Static – PSC

Model	Fan Speed	Rated Airflow	Min CFM	Airflow (cfm) at External Static Pressure (in. wg)															
				0.00	0.05	0.10	0.15	0.20	0.25	0.30	0.35	0.40	0.45	0.50	0.60	0.70	0.80	0.90	1.00
TCH/V 015	HS HI	525	375				774	764	755	745	735	715	696	676	637	519			
	HS MED			735	725	706	696	686	676	657	657	647	637	617	588	480			
	HS LOW			657	647	627	617	608	598	588	578	568	568	559	519				
TCH/V 018	HS HI	600	450				774	764	755	745	735	715	696	676	637	519			
	HS MED			735	725	706	696	686	676	657	657	647	637	617	588	480			
	HS LOW			657	647	627	617	608	598	588	578	568	568	559	519				
TCH/V 024	HS HI	800	600	Operation not recommended										979	903	798	665		
	HS MED											988	960	922	846	713			
	HS LOW							979	960	931	912	884	855	827	751	675			
TCH/V 030	HS HI	1000	750											1102	988	874	760		
	HS MED											1074	1026	979	884	779			
	HS LOW			998	988	979	960	941	931	912	893	865	836	798					
TCH/V 036	HS HI	1200	900									1484	1455	1426	1358	1251	1135	931	
	HS MED			1319	1310	1300	1290	1280	1271	1261	1242	1222	1213	1193	1116	1038			
	HS LOW			999	989	980	980	970	970	960	951	931	922	902					
TCH/V 042	HS HI	1350	1050					1473	1463	1444	1425	1397	1387	1378	1311	1178			
	HS MED			1321	1311	1302	1292	1283	1273	1254	1245	1235	1216	1188	1121				
	HS LOW																		
TCH/V 048	HS HI	1600	1200									1957	1938	1910	1862	1786	1701	1577	1435
	HS MED			1948	1948	1938	1919	1891	1872	1843	1824	1796	1767	1739	1691	1625	1539	1416	1254
	HS LOW			1758	1758	1748	1739	1720	1710	1691	1672	1644	1615	1587	1520	1435	1311		
TCH/V 060	HS HI	2000	1500	2352	2352	2342	2332	2323	2313	2293	2274	2254	2225	2195	2156	2087	2019	1940	1852
	HS MED			2117	2117	2107	2107	2097	2068	2038	2019	1999	1989	1980	1940	1891	1842	1460	1715
	HS LOW			1891	1891	1882	1882	1872	1862	1852	1852	1842	1833	1813	1793	1764	1715	1666	1588

Black areas denote ESP where operation is not recommended.
Units factory shipped on medium speed. Other speeds require field selection.
All airflow is rated and shown above at the lower voltage if unit is dual voltage rated, e.g. 208V for 208-230V units.
Only two speed fan (H & M) available on 575V units.
Performance stated is at the rated power supply, performance may vary as the power supply varies from the rated.

ClimateMaster works continually to improve its products. As a result, the design and specifications of each product at the time of order may be changed without notice and may not be as described herein. Please contact ClimateMaster's Customer Service Department at 1-405-745-6000 for specific information on the current design and specifications. Statements and other information contained herein are not express warranties and do not form the basis of any bargain between the parties, but are merely ClimateMaster's opinion or commendation of its products. The latest version of this document is available at **climatemaster.com**.

Blower Performance Data (ECM Motor)

Airflow in CFM with wet coil and clean air filter

Model	Max ESP (in. wg)	Fan Motor (hp)	Tap Setting	Cooling Mode			Dehumid Mode			Heating Mode		
				Stg 1	Stg 2	Fan	Stg 1	Stg 2	Fan	Stg 1	Stg 2	Fan
TC 015	0.50	1/3	4	470	550	275	376	440	275	470	550	275
	0.50		3	425	500	250	340	400	250	425	500	250
	0.50		2	380	450	225	304	360	225	380	450	225
	0.50		1	340	400	200				340	400	200
TC 018	0.50	1/3	4	550	650	325	440	520	325	550	650	325
	0.50		3	510	600	300	408	480	300	510	600	300
	0.50		2	465	550	275	372	440	275	465	550	275
	0.50		1	425	500	250				425	500	250
TC 024	0.50	1/2	4	745	875	438	596	700	438	745	875	438
	0.50		3	680	800	400	544	640	400	680	800	400
	0.50		2	615	725	363	492	580	363	615	725	363
	0.50		1	550	650	325				550	650	325
TC 030	0.50	1/2	4	890	1050	525	712	840	525	890	1050	525
	0.50		3	810	950	475	648	760	475	810	950	475
	0.50		2	745	875	438	596	700	438	745	875	438
	0.50		1	680	800	400				680	800	400
TC 036	0.50	3/4	4	1085	1275	638	868	1020	638	1085	1275	638
	0.50		3	1020	1200	600	816	960	600	1020	1200	600
	0.50		2	955	1125	563	764	900	563	955	1125	563
	0.50		1	850	1000	500				850	1000	500
TC 042	0.50	3/4	4	1255	1475	738	1004	1180	738	1255	1475	738
	0.50		3	1120	1320	660	896	1056	660	1120	1320	660
	0.50		2	1020	1200	600	816	960	600	1020	1200	600
	0.50		1	935	1100	550				935	1100	550
TC 048	0.75	1	4	1445	1700	850	1156	1360	850	1445	1700	850
	0.75		3	1275	1500	750	1020	1200	750	1275	1500	750
	0.75		2	1190	1400	700	952	1120	700	1190	1400	700
	0.75		1	1105	1300	650				1105	1300	650
TC 060	0.75	1	4	1740	2050	1025	1392	1640	1025	1740	2050	1025
	0.75		3	1615	1900	950	1292	1520	950	1615	1900	950
	0.75		2	1490	1750	875	1192	1400	875	1490	1750	875
	0.75		1	1360	1600	800				1360	1600	800

See ECM control section for details on setting taps.
Airflow is controlled within 5% up to the Max ESP shown with wet coil.
Do not select Dehumidification mode if HP CFM is on setting 1.
ClimaDry is factory wired to operate in stage 2 airflow.

ClimateMaster works continually to improve its products. As a result, the design and specifications of each product at the time of order may be changed without notice and may not be as described herein. Please contact ClimateMaster's Customer Service Department at 1-405-745-6000 for specific information on the current design and specifications. Statements and other information contained herein are not express warranties and do not form the basis of any bargain between the parties, but are merely ClimateMaster's opinion or commendation of its products. The latest version of this document is available at **climatemaster.com**.

WSE Cooling Performance Data

Model		Water Side			Airside		Capacity	
		FLOW (gpm)	PD (psi)	PD (ft)	CFM	PD (in. wg.)	TC	SC
Vertical	006	1.5	1.9	4.4	225	0.05	6.641	4.922
	009	2.3	3.2	7.3	300	0.07	8.288	6.631
	012	3.0	1.9	4.3	400	0.11	8.485	7.569
	015	3.8	2.6	5.9	500	0.06	15.467	12.181
	018	4.5	3.5	8.2	600	0.09	17.123	14.375
	024	6.0	2.1	4.8	800	0.07	18.828	16.091
	030	7.5	3.0	7.0	1000	0.11	21.711	19.242
	036	9.0	1.6	3.8	1200	0.09	24.105	21.108
	042	10.5	2.3	5.2	1400	0.11	26.739	23.785
	048	12.0	1.8	4.2	1600	0.08	34.790	30.193
	060	15.0	2.5	5.8	2000	0.14	39.031	35.758
Horizontal	006	1.5	1.9	4.4	225	0.05	6.641	4.922
	009	2.3	3.2	7.3	300	0.07	8.288	6.631
	012	3.0	1.9	4.3	400	0.11	8.485	7.569
	015	3.8	2.9	6.6	500	0.05	15.118	11.905
	018	4.5	4.0	9.2	600	0.07	16.740	14.039
	024	6.0	1.2	2.8	800	0.08	19.110	16.294
	030	7.5	1.8	4.1	1000	0.12	22.209	19.672
	036	9.0	1.7	4.0	1200	0.11	25.142	21.717
	042	10.5	2.4	5.6	1400	0.14	27.879	24.488
	048	12.0	2.1	4.9	1600	0.10	37.671	31.675
	060	15.0	3.0	6.9	2000	0.15	42.388	37.813

Entering water 45° F, Entering air DB 80° F/WB 67° F

Physical Data-Unit With WSE Option

TC Series	006	009	012	015	018	024	030	036	042	048	060
Water Connection Size FTP	1/2"	1/2"	1/2"	1/2"	1/2"	3/4"	3/4"	3/4"	3/4"	1"	1"
Vertical											
WSE Coil Dimensions (H x W)	10x15	10x15	10x15	20x17.25	20x17.25	20x17.25	20x17.25	24x21.75	24x21.76	24x28.25	24x28.25
WSE Coil Volume (Gal)	0.150	0.150	0.144	0.348	0.348	0.357	0.357	0.746	0.746	1.001	1.001
Weight - Operating (lbs.)	138	140	149	219	224	259	267	289	303	353	368
Weight - Packaged (lbs.)	148	150	159	224	229	264	272	295	310	360	375
Horizontal											
WSE Coil Dimensions (H x W)	10x15	10x15	10x15	16x22	16x22	16x22	16x22	20x25	20x25	20x35	20x35
WSE Coil Volume (Gal)	0.150	0.150	0.139	0.341	0.341	0.382	0.382	0.735	0.735	1.041	1.041
Weight - Operating (lbs.)	145	147	156	220	225	257	265	311	326	372	387
Weight - Packaged (lbs.)	155	157	166	225	230	262	270	317	332	379	394

ClimateMaster works continually to improve its products. As a result, the design and specifications of each product at the time of order may be changed without notice and may not be as described herein. Please contact ClimateMaster's Customer Service Department at 1-405-745-6000 for specific information on the current design and specifications. Statements and other information contained herein are not express warranties and do not form the basis of any bargain between the parties, but are merely ClimateMaster's opinion or commendation of its products. The latest version of this document is available at **climatemaster.com**.

Waterside Economizer Data

225 CFM Nominal Airflow TC-006

	Waterside			Capacity		
EWT °F	FLOW (gpm)	PD (psi)	PD (ft)	TC	SC	LWT
45	0.8	1.0	2.4	5.051	4.125	58.5
45	1.1	1.4	3.3	5.965	4.627	55.6
45	1.5	1.9	4.4	6.641	4.922	53.9
50	0.8	1.0	2.4	4.297	3.578	61.5
50	1.1	1.4	3.2	4.956	4.064	58.8
50	1.5	1.9	4.3	5.420	4.345	57.2
55	0.8	1.0	2.4	3.640	2.950	64.7
55	1.1	1.4	3.2	4.112	3.418	62.3
55	1.5	1.9	4.3	4.425	3.682	60.9
60	0.8	1.0	2.4	3.045	2.230	68.1
60	1.1	1.4	3.2	3.400	2.676	66.0
60	1.5	1.9	4.3	3.619	2.926	64.8

300 CFM Nominal Airflow TC-009

	Waterside			Capacity		
EWT °F	FLOW (gpm)	PD (psi)	PD (ft)	TC	SC	LWT
45	1.1	1.4	3.3	6.442	5.757	56.5
45	1.7	2.2	5.0	7.518	6.312	53.9
45	2.3	3.2	7.3	8.288	6.631	52.4
50	1.1	1.4	3.2	5.394	5.041	59.6
50	1.7	2.2	5.0	6.140	5.572	57.3
50	2.3	3.1	7.3	6.652	5.878	55.9
55	1.1	1.4	3.2	4.507	4.219	63.0
55	1.7	2.1	4.9	5.016	4.721	60.9
55	2.3	3.1	7.2	5.346	5.002	59.8
60	1.1	1.4	3.2	3.742	3.274	66.7
60	1.7	2.1	4.9	4.103	3.750	64.9
60	2.3	3.1	7.2	4.321	4.011	63.8

400 CFM Nominal Airflow TC-012

	Waterside			Capacity		
EWT °F	FLOW (gpm)	PD (psi)	PD (ft)	TC	SC	LWT
45	1.5	0.7	1.5	6.898	6.590	54.2
45	2.3	1.2	2.8	7.820	7.189	52.0
45	3.0	1.9	4.3	8.485	7.569	50.7
50	1.5	0.6	1.5	5.843	5.771	57.8
50	2.3	1.2	2.7	6.410	6.232	55.7
50	3.0	1.9	4.3	6.784	6.509	54.5
55	1.5	0.6	1.4	4.937	4.927	61.6
55	2.3	1.2	2.7	5.369	5.344	59.8
55	3.0	1.8	4.3	5.611	5.568	58.7
60	1.5	0.6	1.4	3.892	3.874	65.2
60	2.3	1.2	2.7	4.326	4.314	63.8
60	3.0	1.8	4.2	4.558	4.548	63.0

500 CFM Nominal Airflow TC-015

	Waterside			Capacity		
EWT °F	FLOW (gpm)	PD (psi)	PD (ft)	TC	SC	LWT
45	1.9	0.8	1.9	11.606	10.149	57.4
45	2.8	1.7	3.9	13.603	11.282	54.7
45	3.8	2.9	6.6	15.118	11.905	53.1
50	1.9	0.8	2.0	9.883	8.861	60.5
50	2.8	1.7	3.9	11.233	9.896	58.0
50	3.8	2.8	6.5	12.189	10.519	56.5
55	1.9	0.8	2.0	8.377	7.518	63.9
55	2.8	1.7	3.9	9.367	8.419	61.7
55	3.8	2.8	6.5	9.986	8.946	60.3
60	1.9	0.8	2.0	6.822	6.075	67.3
60	2.8	1.7	3.8	7.696	6.883	65.5
60	3.8	2.8	6.4	8.189	7.343	64.4

600 CFM Nominal Airflow TC-018

	Waterside			Capacity		
EWT °F	FLOW (gpm)	PD (psi)	PD (ft)	TC	SC	LWT
45	2.3	1.1	2.7	12.933	12.189	56.5
45	3.4	2.4	5.4	15.110	13.404	54.0
45	4.5	4.0	9.2	16.740	14.039	52.4
50	2.3	1.1	2.7	10.918	10.653	59.7
50	3.4	2.3	5.4	12.351	11.788	57.3
50	4.5	3.9	9.1	13.359	12.462	55.9
55	2.3	1.1	2.6	9.223	9.052	63.2
55	3.4	2.3	5.4	10.225	10.028	61.1
55	4.5	3.9	9.0	10.854	10.597	59.8
60	2.3	1.1	2.6	7.543	7.346	66.7
60	3.4	2.3	5.3	8.400	8.216	65.0
60	4.5	3.8	8.9	8.880	8.705	63.9

800 CFM Nominal Airflow TC-024

	Waterside			Capacity		
EWT °F	FLOW (gpm)	PD (psi)	PD (ft)	TC	SC	LWT
45	3.0	0.4	0.8	13.625	12.035	54.1
45	4.5	0.7	1.6	16.786	14.548	52.5
45	6.0	1.2	2.8	19.110	16.294	51.4
50	3.0	0.4	0.8	11.758	10.732	57.8
50	4.5	0.7	1.6	14.407	12.993	56.4
50	6.0	1.2	2.7	16.265	14.484	55.4
55	3.0	0.4	0.8	10.064	9.250	61.7
55	4.5	0.7	1.6	12.225	11.250	60.4
55	6.0	1.2	2.7	13.632	12.481	59.5
60	3.0	0.4	0.8	8.560	7.569	65.7
60	4.5	0.7	1.6	10.254	9.307	64.6
60	6.0	1.2	2.7	11.223	10.277	63.7

1000 CFM Nominal Airflow TC-030

	Waterside			Capacity		
EWT °F	FLOW (gpm)	PD (psi)	PD (ft)	TC	SC	LWT
45	3.8	0.5	1.2	16.369	15.150	53.7
45	5.6	1.1	2.4	19.937	18.055	52.1
45	7.5	1.8	4.1	22.209	19.672	50.9
50	3.8	0.5	1.2	14.115	13.516	57.5
50	5.6	1.1	2.4	17.032	16.062	56.1
50	7.5	1.8	4.1	18.697	17.317	55.0
55	3.8	0.5	1.2	12.056	11.674	61.4
55	5.6	1.1	2.4	14.344	13.853	60.1
55	7.5	1.8	4.1	15.418	14.742	59.1
60	3.8	0.5	1.2	10.208	9.604	65.4
60	5.6	1.0	2.4	11.889	11.414	64.2
60	7.5	1.8	4.1	12.383	11.935	63.3

1200 CFM Nominal Airflow TC-036

	Waterside			Capacity		
EWT °F	FLOW (gpm)	PD (psi)	PD (ft)	TC	SC	LWT
45	4.5	0.3	0.7	18.768	17.626	53.3
45	6.8	0.9	2.1	22.404	20.058	51.6
45	9.0	1.7	4.0	25.142	21.717	50.6
50	4.5	0.3	0.6	16.318	15.344	57.3
50	6.8	0.9	2.0	19.284	17.552	55.7
50	9.0	1.7	4.0	21.383	19.009	54.8
55	4.5	0.3	0.6	13.912	12.951	61.2
55	6.8	0.9	2.1	16.212	14.929	59.8
55	9.0	1.8	4.1	17.675	16.181	58.9
60	4.5	0.4	0.8	11.549	10.445	65.1
60	6.8	1.0	2.3	13.190	12.188	63.9
60	9.0	1.9	4.5	14.020	13.232	63.1

Interpolation is permissable, extrapolation is not. All entering air conditions are 80°F DB and 67°F WB. See performance correction tables for operating conditions other than those listed above.

ClimateMaster works continually to improve its products. As a result, the design and specifications of each product at the time of order may be changed without notice and may not be as described herein. Please contact ClimateMaster's Customer Service Department at 1-405-745-6000 for specific information on the current design and specifications. Statements and other information contained herein are not express warranties and do not form the basis of any bargain between the parties, but are merely ClimateMaster's opinion or commendation of its products. The latest version of this document is available at **climatemaster.com**.

Waterside Economizer Data

1400 CFM Nominal Airflow TC-042

	Waterside			Capacity		
EWT °F	FLOW (gpm)	PD (psi)	PD (ft)	TC	SC	LWT
45	5.3	0.5	1.1	21.057	20.113	53.0
45	7.9	1.3	3.0	25.064	22.800	51.4
45	10.5	2.4	5.6	27.879	24.488	50.3
50	5.3	0.4	1.0	18.254	17.544	57.0
50	7.9	1.3	2.9	21.453	19.959	55.4
50	10.5	2.4	5.6	23.492	21.398	54.5
55	5.3	0.5	1.1	15.497	14.853	60.9
55	7.9	1.3	3.0	17.895	16.990	59.5
55	10.5	2.5	5.8	19.160	18.176	58.6
60	5.3	0.6	1.3	12.787	12.039	64.9
60	7.9	1.4	3.3	14.389	13.893	63.7
60	10.5	2.7	6.2	14.884	14.823	62.8

1600 CFM Nominal Airflow TC-048

	Waterside			Capacity		
EWT °F	FLOW (gpm)	PD (psi)	PD (ft)	TC	SC	LWT
45	6.0	0.9	2.2	29.364	26.323	54.8
45	9.0	1.5	3.4	34.188	29.606	52.6
45	12.0	2.1	4.9	37.671	31.675	51.3
50	6.0	1.0	2.2	25.063	22.810	58.4
50	9.0	1.5	3.4	28.940	25.807	56.4
50	12.0	2.2	5.0	31.653	27.659	55.3
55	6.0	1.0	2.2	21.061	19.070	62.0
55	9.0	1.5	3.4	24.060	21.779	60.3
55	12.0	2.2	5.0	26.048	23.413	59.3
60	6.0	0.9	2.2	17.384	15.081	65.8
60	9.0	1.5	3.4	19.572	17.506	64.3
60	12.0	2.2	5.0	20.879	18.924	63.5

2000 CFM Nominal Airflow TC-060

	Waterside			Capacity		
EWT °F	FLOW (gpm)	PD (psi)	PD (ft)	TC	SC	LWT
45	7.5	1.2	2.7	33.525	32.134	53.9
45	11.3	1.9	4.5	38.794	35.768	51.9
45	15.0	3.0	6.9	42.388	37.813	50.7
50	7.5	1.2	2.8	28.521	27.934	57.6
50	11.3	2.0	4.6	32.687	31.220	55.8
50	15.0	3.0	6.9	35.360	32.993	54.7
55	7.5	1.2	2.8	23.862	23.471	61.4
55	11.3	2.0	4.6	26.996	26.408	59.8
55	15.0	3.0	7.0	28.793	27.909	58.8
60	7.5	1.2	2.7	19.574	18.723	65.2
60	11.3	2.0	4.6	21.744	21.316	63.9
60	15.0	3.0	7.0	22.709	22.548	63.0

Interpolation is permissable, extrapolation is not. All entering air conditions are 80°F DB and 67°F WB. See performance correction tables for operating conditions other than those listed above.

PD Table For WSE 3 Way Valve

	Econ - On	Econ -Off
Model	CV	
006	5.6	4.9
009	5.6	4.9
012	5.6	4.9
015	11.7	5.8
018	11.7	5.8
024	11.7	5.8
030	11.7	5.8
036	11.7	5.8
042	11.7	5.8
048	18.7	9.3
060	18.7	9.3

Airside PD

		AirSide PD Adder (in. wg) at CFM				
Model	Rated Airflow	150	175	200	225	250
TC*006	225	0.03	0.03	0.04	0.05	0.06
Model	Rated Airflow	225	260	300	340	375
TC*009	300	0.05	0.06	0.07	0.09	0.10
Model	Rated Airflow	300	350	400	450	500
TC*012	400	0.07	0.09	0.11	0.13	0.15
Model	Rated Airflow	375	437.5	500	562.5	625
TC*015	500	0.03	0.04	0.05	0.06	0.07
Model	Rated Airflow	450	525	600	675	750
TC*018	600	0.04	0.06	0.07	0.08	0.10
Model	Rated Airflow	600	700	800	900	1000
TC*024	800	0.05	0.07	0.08	0.10	0.12
Model	Rated Airflow	750	875	1000	1125	1250
TC*030	1000	0.08	0.10	0.12	0.14	0.16
Model	Rated Airflow	900	1050	1200	1350	1500
TC*036	1200	0.07	0.09	0.11	0.13	0.16
Model	Rated Airflow	1050	1225	1400	1575	1750
TC*042	1400	0.09	0.12	0.14	0.17	0.21
Model	Rated Airflow	1200	1400	1600	1800	2000
TC*048	1600	0.06	0.08	0.10	0.12	0.15
Model	Rated Airflow	1500	1750	2000	2250	2500
TC*060	2000	0.09	0.12	0.15	0.17	0.20

Add WSE to your duct static to get total ESP. Check blower performance table to be sure you meet CFM requirement and are within operational range.

ClimateMaster works continually to improve its products. As a result, the design and specifications of each product at the time of order may be changed without notice and may not be as described herein. Please contact ClimateMaster's Customer Service Department at 1-405-745-6000 for specific information on the current design and specifications. Statements and other information contained herein are not express warranties and do not form the basis of any bargain between the parties, but are merely ClimateMaster's opinion or commendation of its products. The latest version of this document is available at **climatemaster.com**.

Entering Air Correction Table for WSE

Full Load Cooling Corrections 400 CFM per Ton										
Ent Air WB °F	Total Clg Cap	Sens Clg Cap Multipliers - Entering DB °F								
		65	70	75	80	80.6	85	90	95	100
50	0.352	*	*	*	*	*	*	*	*	*
55	0.507	0.615	0.766	*	*	*	*	*	*	*
60	0.693	0.542	0.740	0.912	*	*	*	*	*	*
65	0.906		0.623	0.842	1.035	1.057	*	*	*	*
66.2	0.962		0.582	0.811	1.016	1.039	1.195	*	*	*
67	1.000		0.551	0.788	1.000	1.024	1.187	*	*	*
70	1.148			0.681	0.920	0.947	1.135	1.324	*	*
75	1.420				0.715	0.748	0.976	1.211	1.421	1.421

* Sensible capacity equals total capacity.
AHRI/ISO/ASHRAE 13256-1 uses entering air conditions of Cooling - 80.6°F DB/ 66.2°F WB, and Heating -68°F DB/ 59°F WB entering air temperature.

Air Flow Correction Table

Airflow	Cooling Corrections	
% Normal Capacity	Sensible Capacity	Sens/Total Ratio
75	0.834	0.940
81.25	0.878	0.957
87.5	0.921	0.972
93.75	0.962	0.987
100	1.000	1.000
106.25	1.036	1.012
112.5	1.071	1.023
118.75	1.103	1.033
125	1.133	1.042

ClimateMaster works continually to improve its products. As a result, the design and specifications of each product at the time of order may be changed without notice and may not be as described herein. Please contact ClimateMaster's Customer Service Department at 1-405-745-6000 for specific information on the current design and specifications. Statements and other information contained herein are not express warranties and do not form the basis of any bargain between the parties, but are merely ClimateMaster's opinion or commendation of its products. The latest version of this document is available at **climatemaster.com**.

The ECM fan is controlled by an interface board that converts thermostat inputs and field selectable CFM settings to signals used by the ECM motor controller. Fan speeds are selected with DIP switch settings. To take full advantage of the ECM motor staging features, a multi-stage thermostat should be used (2-stage heat/2-stage cool or 3-stage heat/2-stage cool).

Note: Power must be off to the unit for at least three seconds before the ECM motor will recognize a speed change. The motor will recognize a change in the CFM Adjust or dehumidification mode settings while the unit is powered.

There are four different airflow settings from lowest airflow rate (speed tap 1) to the highest airflow rate (speed tap 4). The charts below indicate settings for the ECM interface board, followed by detailed information for each setting.

Cooling Settings: The cooling setting determines the cooling (normal) CFM for all units with ECM motor. Cooling (normal) setting is used when the unit is not in dehumidification mode. Tap 1 is the lowest CFM setting, while tap 4 is the highest CFM setting. To avoid air coil freeze-up, tap 1 may not be used if the dehumidification mode is selected. Consult the ECM blower performance data table for the specific unit series and model to correlate speed tap setting to airflow in CFM.

Heating Settings: The heating setting determines the heating CFM. Tap 1 is the lowest CFM setting, while tap 4 is the highest CFM setting. Consult the ECM blower performance data table for the specific unit series and model to correlate speed tap setting to airflow in CFM.

CFM Adjust Settings: The CFM adjust setting allows four selections. The NORM setting is the factory default position. The + or – settings adjust the airflow by +/- 5%. The +/- settings are used to "fine tune" airflow adjustments. The TEST setting runs the ECM motor at 400 cfm/ton, which causes the motor to operate like a standard PSC motor, and disables the CFM counter.

Dehumidification Mode Settings: The dehumidification mode setting provides field selection of humidity control. When operating in the normal mode, the cooling airflow settings are determined by the cooling tap setting above. When dehumidification is enabled there is a reduction in airflow in cooling to increase the moisture removal of the heat pump. Consult submittal data or specifications catalog for the specific unit series and model to correlate speed tap to airflow in CFM. The dehumidification mode can be enabled in two ways.

Cooling settings

Tap Setting	DIP Switch	
	SW1	SW2
1	ON	ON
2	ON	OFF
3	OFF	ON
4	OFF	OFF

Heating settings

Tap Setting	DIP Switch	
	SW3	SW4
1	ON	ON
2	ON	OFF
3	OFF	ON
4	OFF	OFF

CFM Adjust settings

Tap Setting	DIP Switch	
	SW7	SW8
TEST	ON	ON
-	ON	OFF
+	OFF	ON
NORM	OFF	OFF

Dehum Mode settings

Tap Setting	DIP Switch
	SW9
NORM	ON
Dehumid	OFF

Only DIP switch numbers 1 to 4 and 7 to 9 are used.

⚠ WARNING! ⚠

WARNING! When the disconnect switch is closed, high voltage is present in some areas of the electrical panel. Exercise caution when working with energized equipment.

ClimateMaster works continually to improve its products. As a result, the design and specifications of each product at the time of order may be changed without notice and may not be as described herein. Please contact ClimateMaster's Customer Service Department at 1-405-745-6000 for specific information on the current design and specifications. Statements and other information contained herein are not express warranties and do not form the basis of any bargain between the parties, but are merely ClimateMaster's opinion or commendation of its products. The latest version of this document is available at **climatemaster.com**.

1. **Constant Dehumidification Mode:** When the dehumidification mode is selected (via DIP switch or jumper setting), the ECM motor will operate with a multiplier applied to the cooling CFM settings (approx. 20-25% lower airflow). Any time the unit is running in the cooling mode, it will operate at the lower airflow to improve latent capacity. The "DEHUM" LED will be illuminated at all times. Heating airflow is not affected. Note: Do not select dehumidification mode if cooling setting is tap 1.

2. **Automatic (Humidistat-controlled)** Dehumidification Mode: When the dehumidification mode is selected (via DIP switch) AND a humidistat is connected to terminal DH, the cooling airflow will only be reduced when the humidistat senses that additional dehumidification is required. The DH terminal is reverse logic. Therefore, a humidistat (not dehumidistat) is required. The "DEHUM" LED will be illuminated only when the humidistat is calling for dehumidification mode. Heating airflow is not affected. The ECM motor includes "soft start" and "ramp down" features. The soft start feature is a gentle increase of motor rpm at blower start up. This creates a much quieter blower start cycle.Note: Do not select dehumidification mode if cooling setting is Tap 1.

The ramp down feature allows the blower to slowly decrease rpm to a full stop at the end of each blower cycle. This creates a much quieter end to each blower cycle and adds overall unit efficiency.

The ramp down feature may be eliminated during an ESD (Emergency Shut Down) situation when using a DXM unit controller. A relay is required to break the line voltage to the ECM motor during ESD. This relay can be wired as shown below to eliminate the ramp down (and operation) of the ECM blower motor.

ClimateMaster works continually to improve its products. As a result, the design and specifications of each product at the time of order may be changed without notice and may not be as described herein. Please contact ClimateMaster's Customer Service Department at 1-405-745-6000 for specific information on the current design and specifications. Statements and other information contained herein are not express warranties and do not form the basis of any bargain between the parties, but are merely ClimateMaster's opinion or commendation of its products. The latest version of this document is available at **climatemaster.com**.

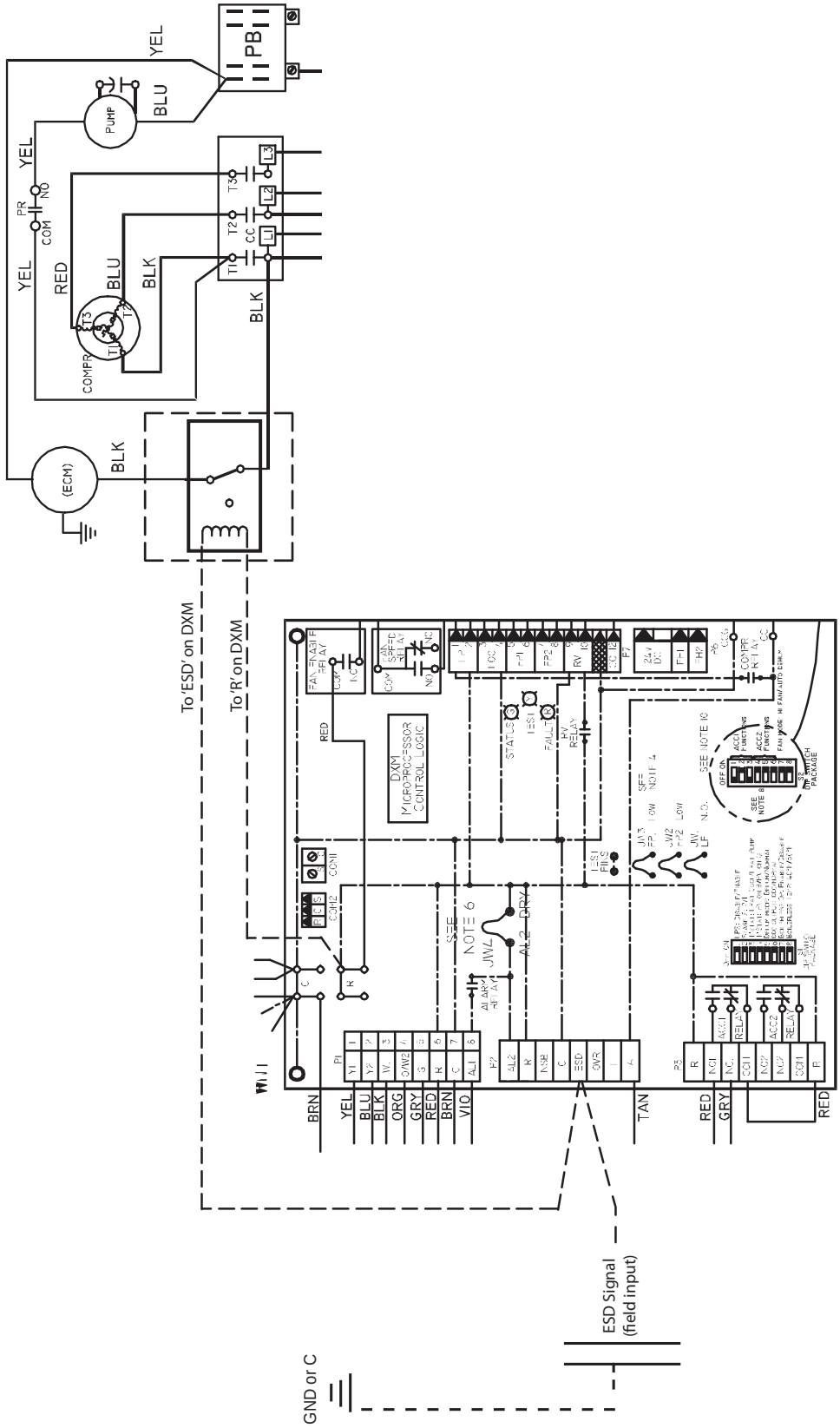

ClimateMaster works continually to improve its products. As a result, the design and specifications of each product at the time of order may be changed without notice and may not be as described herein. Please contact ClimateMaster's Customer Service Department at 1-405-745-6000 for specific information on the current design and specifications. Statements and other information contained herein are not express warranties and do not form the basis of any bargain between the parties, but are merely ClimateMaster's opinion or commendation of its products. The latest version of this document is available at **climatemaster.com**.

TC Series	006	009	012	015	018	024	030	036	041	042	048	060
Compressor (1 Each)	Rotary					Scroll						
Factory Charge HFC-410A (oz)	17	18.5	23	32	43	40	47	50	70	70	74	82
ECM Fan Motor & Blower												
Blower Wheel Size (Dia x w)	N/A	N/A	N/A	9x7	9x7	9x7	9x7	9x8	N/A	9x8	10x10	11x10
PSC Fan Motor & Blower												
Fan Motor Type/Speeds	PSC/3	PSC/3	PSC-3	PSC/3	PSC/3	PSC/3	PSC/3	PSC/3	PSC/3	PSC/3	PSC/3	PSC/3
Blower Wheel Size (Dia x w)	5x5	5x5	6x5	8x7	8x7	9x7	9x7	9x8	9x8	9x8	10x10	11x10
Water Connection Size												
FPT	1/2"	1/2"	1/2"	1/2"	1/2"	3/4"	3/4"	3/4"	3/4"	3/4"	1"	1"
Coax Volume (gallons)	0.123	0.143	0.167	0.286	0.450	0.286	0.323	0.323	0.890	0.890	0.738	0.939
Vertical												
Air Coil Dimensions (H x W)	10x15	10x15	10x15	20x17.25	20x17.25	20x17.25	20x17.25	24x21.75	20x17.25	24x21.76	24x28.25	24x28.25
Filter Standard - 1" Throwaway	10x18	10x18	10x18	20x20	20x20	20x20	20x20	24x24	20x20	24x24	1-14x24, 1-18x24	1-14x24, 1-18x24
Weight - Operating (lbs.)	103	105	114	153	158	189	197	203	210	218	263	278
Weight - Packaged (lbs.)	113	115	124	158	163	194	202	209	217	224	270	285
Horizontal												
Air Coil Dimensions (H x W)	10x15	10x15	10x15	16x22	16x22	16x22	16x22	20x25	N/A	20x25	20x35	20x35
Filter Standard - 1" Throwaway	10x18	10x18	10x18	16x25	16x25	18x25	18x25	20x28 or 2-20x14	N/A	20x28 or 2-20x14	1-20x24, 1-20x14	1-20x24, 1-20x14
Weight - Operating (lbs.)	103	105	114	153	158	174	182	203	N/A	218	263	278
Weight - Packaged (lbs.)	113	115	124	158	163	179	187	209	N/A	224	270	285

Notes:
All units have TXV expansion device, and 1/2" & 3/4" electrical knockouts.
FPT = Female Pipe Thread
Condensate Drain Connection is 3/4" FPT.
575 volt fan motors are two speed.
Models 006, 009, 012 compressor are mounted on springs. Installer must loosen bolts and remove shipping bracket.

Unit Maximum Water Working Pressure	Max Pressure PSIG [kPa]
Base Unit	500 [3447]
WSE Option	300 [2068]

ClimateMaster works continually to improve its products. As a result, the design and specifications of each product at the time of order may be changed without notice and may not be as described herein. Please contact ClimateMaster's Customer Service Department at 1-405-745-6000 for specific information on the current design and specifications. Statements and other information contained herein are not express warranties and do not form the basis of any bargain between the parties, but are merely ClimateMaster's opinion or commendation of its products. The latest version of this document is available at **climatemaster.com**.

TC - Horizontal – Dimensional Data

Horizontal Model		Overall Cabinet		
		A Width	B Length	C Height
006 - 012	in	19.1	34.1	11.1
	cm	48.5	86.6	28.2
015 - 018	in	20.1	43.1	17.0
	cm	51.1	109.5	43.2
024 - 030	in	20.1	43.1	18.3
	cm	51.1	109.5	46.5
036 - 042	in	20.1	47.1	21.0
	cm	51.1	119.6	53.3
048 - 060	in	24.1	54.1	21.0
	cm	61.2	137.4	53.3

Horizontal Model		Electrical Knockouts		
		H 1/2”	J 1/2”	K 3/4”
		Low Voltage	Low Voltage	Power Supply
006 - 012	in	8.1	5.1	2.1
	cm	20.6	13.0	5.4
015 - 030	in	12.1	9.1	6.1
	cm	30.8	23.2	15.6
036 - 060	in	16.1	13.1	10.1
	cm	41.0	33.3	25.7

Horizontal Model		Water Connections						
		1		2		3		Loop In/Out FPT
		Loop In D	Loop In E	Loop Out F	Loop Out G	Cond. 3/4” FPT		
						AA	BB	
006 - 012	in	5.6	1.1	1.6	1.1	3.3	0.7	1/2”
	cm	14.2	2.7	4.1	2.7	8.4	1.8	
015	in	15.1	1.4	3.2	1.4	3.3	0.7	1/2”
	cm	38.4	3.4	8.1	3.5	8.4	1.8	
018	in	15.1	1.4	4.1	1.4	3.3	0.7	1/2”
	cm	38.4	3.4	10.4	3.5	8.4	1.8	
024	in	16.4	1.4	4.4	1.4	3.3	0.7	3/4”
	cm	41.7	3.4	11.3	3.5	8.4	1.8	
030	in	16.4	1.4	3.1	1.4	3.3	0.7	3/4”
	cm	41.7	3.4	7.8	3.5	8.4	1.8	
036	in	19.1	1.4	5.3	1.4	3.3	0.7	3/4”
	cm	48.5	3.4	13.4	3.5	8.4	1.8	
042	in	19.1	1.4	4.4	1.4	3.3	0.7	3/4”
	cm	48.5	3.4	11.3	3.5	8.4	1.8	
048	in	19.1	1.4	4.4	1.4	3.3	0.7	1”
	cm	48.5	3.4	11.1	3.5	8.4	1.8	
060	in	19.1	1.4	3.8	1.4	3.3	0.7	1”
	cm	48.5	3.4	9.7	3.5	8.4	1.8	

Horizontal Model		Discharge Connection Duct Flange Installed (+/- 0.10 in, +/- 2.5mm)					Return Connection Using Return Air Opening			
		L	M Supply Height	N Supply Width	O	P	Q Return Width	R Return Height	S	T
006 - 012	in	0.8	8.9	6.7	6.0	1.3	16.1	9.8	1.1	0.6
	cm	1.9	22.7	17.0	15.2	3.3	41.0	25.0	2.7	1.5
015 - 018	in	2.6	13.3	9.9	4.1	1.3	23.0	15.0	1.1	1.0
	cm	6.6	33.8	25.1	10.5	3.3	58.4	38.1	2.8	2.5
024 - 030	in	2.6	13.3	9.9	4.1	1.3	23.0	16.3	1.1	1.0
	cm	6.6	33.8	25.1	10.5	3.3	58.4	41.4	2.8	2.5
036 - 042	in	2.5	16.1	11.0	3.0	2.5	25.9	19.0	1.1	1.0
	cm	6.3	40.9	27.9	7.7	6.4	65.8	48.3	2.8	2.5
048	in	3.7	16.1	13.7	4.1	1.3	35.9	19.0	1.1	1.0
	cm	9.5	41.0	34.8	10.3	3.2	91.2	48.3	2.8	2.5
060	in	1.7	18.1	13.7	4.1	1.3	35.9	19.0	1.1	1.0
	cm	4.4	46.0	34.8	10.3	3.2	91.2	48.3	2.8	2.5

ClimateMaster works continually to improve its products. As a result, the design and specifications of each product at the time of order may be changed without notice and may not be as described herein. Please contact ClimateMaster's Customer Service Department at 1-405-745-6000 for specific information on the current design and specifications. Statements and other information contained herein are not express warranties and do not form the basis of any bargain between the parties, but are merely ClimateMaster's opinion or commendation of its products. The latest version of this document is available at **climatemaster.com**.

TC - Horizontal – Dimensional Data

LEFT RETURN

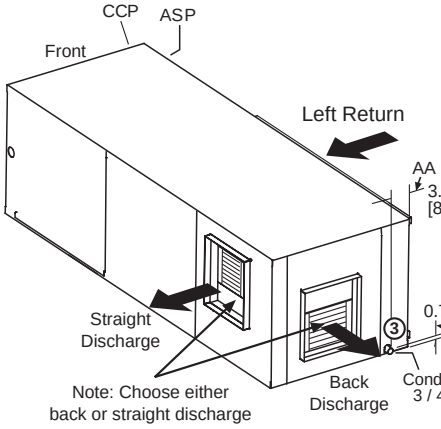

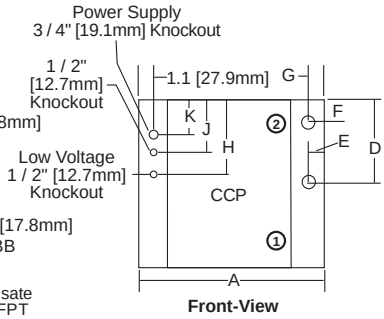

Front-View

RIGHT RETURN

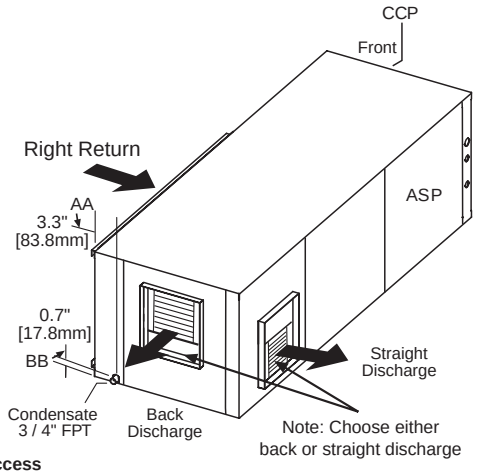

Note: Blower service panel requires 2' service access

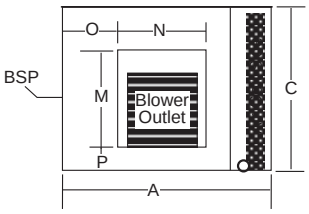

Left Return Back Discharge

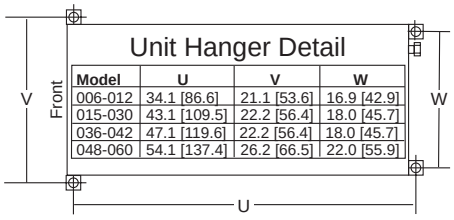

Unit Hanger Detail

Model	U	V	W
006-012	34.1 [86.6]	21.1 [53.6]	16.9 [42.9]
015-030	43.1 [109.5]	22.2 [56.4]	18.0 [45.7]
036-042	47.1 [119.6]	22.2 [56.4]	18.0 [45.7]
048-060	54.1 [137.4]	26.2 [66.5]	22.0 [55.9]

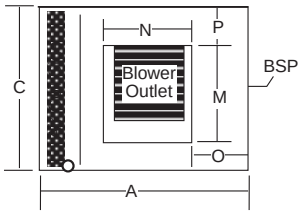

Right Return Back Discharge

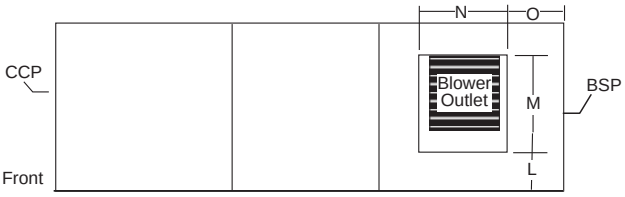

Left Return Straight Discharge

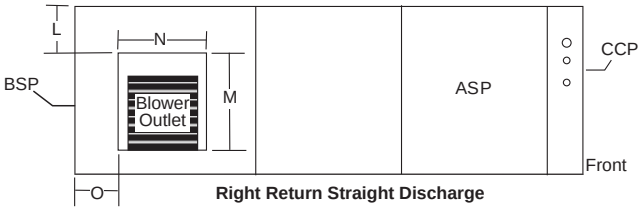

Right Return Straight Discharge

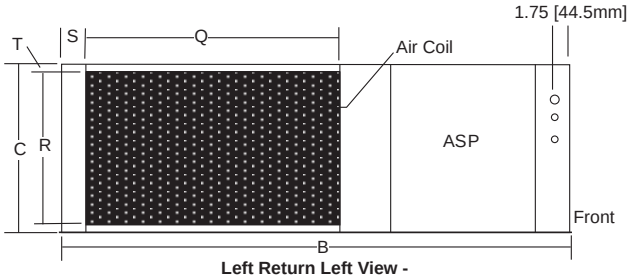

Left Return Left View - Air Coil Opening

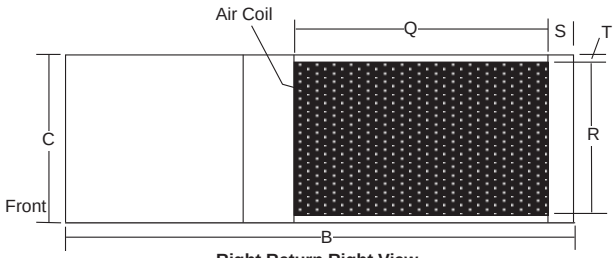

Right Return Right View - Air Coil Opening

Notes:

1. While clear access to all removable panels is not required, installer should take care to comply with all building codes and allow adequate clearance for future field service.
2. Units are shipped with air filter rails that are not suitable for supporting return air ductwork. An air filter frame with duct mounting collar is available as an accessory, see the ClimateMaster Accessory Submittal set for futher information on this frame.
3. Discharge flange and hanger brackets are factory installed.
4. Condensate is 3/4" FPT.
5. Blower service panel requires 2' service access.
6. Blower service access is through back panel on straight discharge units or through panel opposite air coil on back discharge units

Legend:
CCP = Control/Compressor Access Panel
BSP = Blower Service Panel
*ASP = Additional Service Panel (not required)

Note:
*ASP are removable panels that provide additional access to the units interior.
Clear access to ASP panels is not required and they are not to be used in place of the mandatory CCP and BSP panels.

ClimateMaster works continually to improve its products. As a result, the design and specifications of each product at the time of order may be changed without notice and may not be as described herein. Please contact ClimateMaster's Customer Service Department at 1-405-745-6000 for specific information on the current design and specifications. Statements and other information contained herein are not express warranties and do not form the basis of any bargain between the parties, but are merely ClimateMaster's opinion or commendation of its products. The latest version of this document is available at **climatemaster.com**.

TCH with Left Hand Waterside Economizer-Dimensional Data

Horizontal Model		Overall Cabinet			WSE	Left WSE Connections							Return Connection Using Return Air Opening			
		A Width	B Length	C Height	H Width	In		Out		Cond. 3/4" FBT		Water In/Out FPT	Q Return Width	R Return Height	S	T
						D	E	F	G	AA	BB					
006-012	in	26.1	34.1	11.0	7.1	4.7	3.5	8.0	3.5	3.5	0.8	1/2"	16.1	10.0	1.5	0.3
	cm	66.3	86.6	27.9	18.0	11.9	8.9	20.3	8.9	8.9	2.0		40.9	25.4	3.8	0.8
015-018	in	27.2	43.1	17.0	7.1	5.3	3.5	11.5	3.5	3.5	0.8	1/2"	23.0	16.0	1.5	0.3
	cm	69.1	109.5	43.2	18.0	13.5	8.9	29.2	8.9	8.9	2.0		58.4	40.6	3.8	0.8
024-030	in	27.2	43.1	18.2	7.1	5.1	3.5	21.1	3.5	3.5	0.8	3/4"	22.9	16.0	1.5	0.3
	cm	69.1	109.5	46.2	18.0	13.0	8.9	53.6	8.9	8.9	2.0		58.2	40.6	3.8	0.8
036-042	in	27.2	47.1	21.0	7.1	6.5	3.5	14.0	3.5	3.5	0.8	3/4"	26.0	20.0	1.5	0.3
	cm	69.1	119.6	53.3	18.0	16.5	8.9	35.6	8.9	8.9	2.0		66.0	50.8	3.8	0.8
048-060	in	31.6	54.1	21.0	7.5	5.0	1.3	15.9	1.3	3.5	0.8	3/4"	36.0	20.0	1.5	0.3
	cm	80.3	137.4	53.3	19.1	12.7	3.3	40.4	3.3	8.9	2.0		91.4	50.8	3.8	0.8

Left Return TCH with WSE

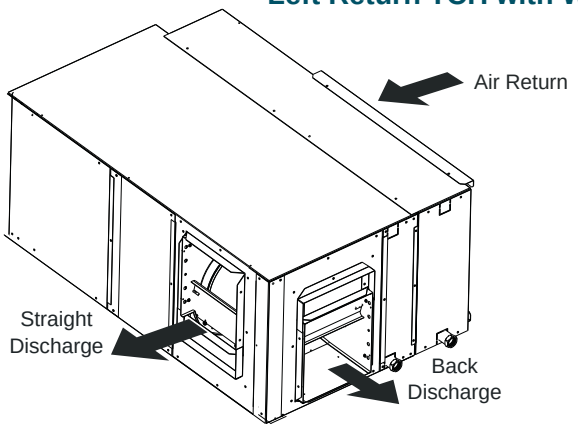

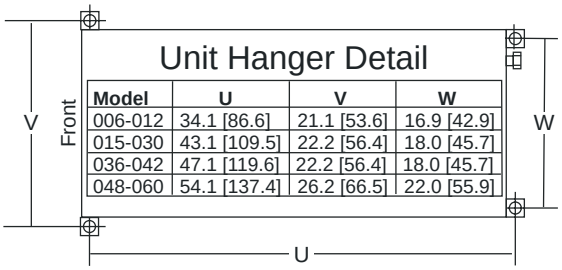

Model	U	V	W
006-012	34.1 [86.6]	21.1 [53.6]	16.9 [42.9]
015-030	43.1 [109.5]	22.2 [56.4]	18.0 [45.7]
036-042	47.1 [119.6]	22.2 [56.4]	18.0 [45.7]
048-060	54.1 [137.4]	26.2 [66.5]	22.0 [55.9]

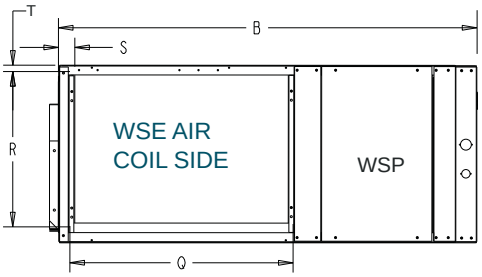

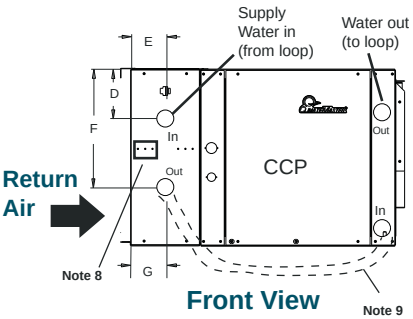

Front View Left Return

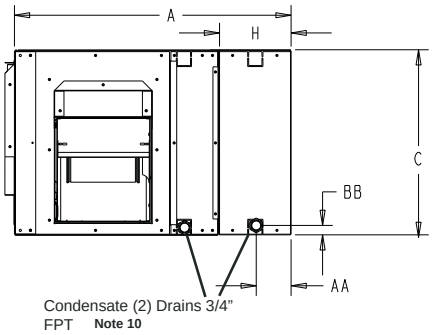

Back View

Notes:

1. While clear access to all removable panels is not required, installer should take care to comply with all building codes and allow adequate clearance for future field service.
2. Units are shipped with air filter rails that are not suitable for supporting return air ductwork. An air filter frame with duct mounting collar is available as an accessory, see the ClimateMaster Accessory Submittal set for futher information on this frame.
3. Discharge flange and hanger brackets are factory installed
6. Blower service access is through back panel on straight discharge units or through panel opposite air coil on back discharge units.
7. Filters same size as standard unit
8. Factory supplied controller (aquastat) is shipped inside unit open waterside economizer panel (WSP), remove, slide onto dinrail, and connect molex.
9. WSE to unit piping to be field fabricated, Run below or in front. Must leave room to remove front access panel (CCP) to service unit.
10. External trap and vent both drains before joining

ClimateMaster works continually to improve its products. As a result, the design and specifications of each product at the time of order may be changed without notice and may not be as described herein. Please contact ClimateMaster's Customer Service Department at 1-405-745-6000 for specific information on the current design and specifications. Statements and other information contained herein are not express warranties and do not form the basis of any bargain between the parties, but are merely ClimateMaster's opinion or commendation of its products. The latest version of this document is available at **climatemaster.com**.

TCH with Right Hand Waterside Economizer-Dimensional Data

Horizontal Model		Overall Cabinet			WSE	Left WSE Connections							Return Connection Using Return Air Opening			
		A Width	B Length	C Height	H Width	In		Out		Cond. 3/4" FBT		Water In/Out FPT	Q Return Width	R Return Height	S	T
						D	E	F	G	AA	BB					
006-012	in	26.1	34.1	11.0	7.1	8.0	3.5	4.7	3.5	3.5	0.8	1/2"	16.1	10.0	1.5	0.3
	cm	66.3	86.6	27.9	18.0	20.3	8.9	11.9	8.9	8.9	2.0		40.9	25.4	3.8	0.8
015-018	in	27.2	43.1	17.0	7.1	11.5	3.5	5.3	3.5	3.5	0.8	1/2"	23.0	16.0	1.5	0.3
	cm	69.1	109.5	43.2	18.0	29.2	8.9	13.5	8.9	8.9	2.0		58.4	40.6	3.8	0.8
024-030	in	27.2	43.1	18.2	7.1	21.1	3.5	5.1	3.5	3.5	0.8	3/4"	22.9	16.0	1.5	0.3
	cm	69.1	109.5	46.2	18.0	53.6	8.9	13.0	8.9	8.9	2.0		58.2	40.6	3.8	0.8
036-042	in	27.2	47.1	21.0	7.1	14.0	3.5	6.5	3.5	3.5	0.8	3/4"	26.0	20.0	1.5	0.3
	cm	69.1	119.6	53.3	18.0	35.6	8.9	16.5	8.9	8.9	2.0		66.0	50.8	3.8	0.8
048-060	in	31.6	54.1	21.0	7.5	15.9	1.3	5.0	1.3	3.5	0.8	3/4"	36.0	20.0	1.5	0.3
	cm	80.3	137.4	53.3	19.1	40.4	3.3	12.7	3.3	8.9	2.0		91.4	50.8	3.8	0.8

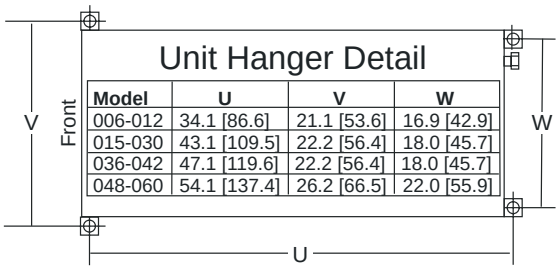

Right Return TCH with WSE

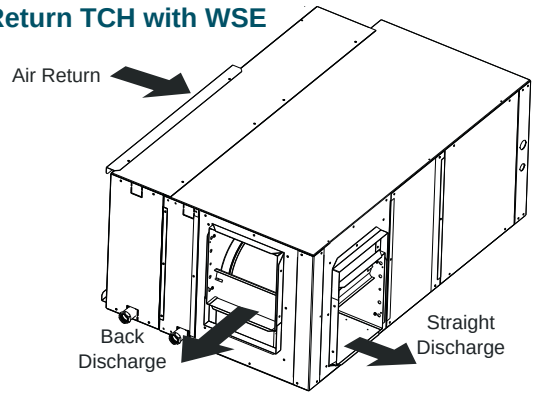

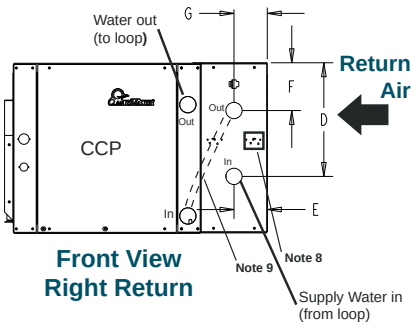

Front View Right Return

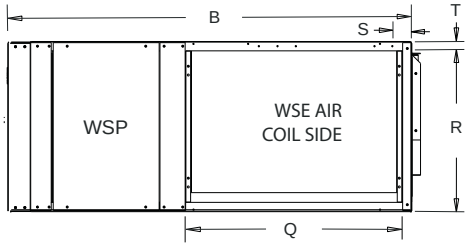

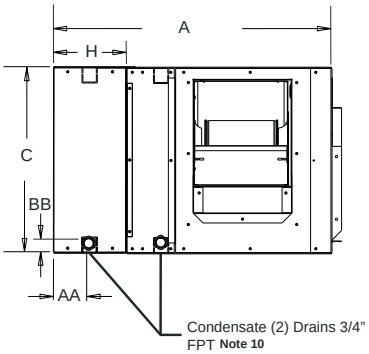

Back View

Notes:

1. While clear access to all removable panels is not required, installer should take care to comply with all building codes and allow adequate clearance for future field service.
2. Units are shipped with air filter rails that are not suitable for supporting return air ductwork. An air filter frame with duct mounting collar is available as an accessory, see the ClimateMaster Accessory Submittal set for futher information on this frame.
3. Discharge flange and hanger brackets are factory installed.
4. Condensate drains are 3/4" FPT.
5. Blower service panel requires 2' service access.
6. Blower service access is through back panel on straight discharge units or through panel opposite air coil on back discharge units.
7. Filters same size as standard unit
8. Factory supplied controller (aquastat) is shipped inside unit open waterside economizer panel (WSP), remove, slide onto dinrail, and connect molex.
9. WSE to unit piping to be field fabricated, Run below or in front. Must leave room to remove front access panel (CCP) to service unit.
10. External trap and vent both drains before joining.

ClimateMaster works continually to improve its products. As a result, the design and specifications of each product at the time of order may be changed without notice and may not be as described herein. Please contact ClimateMaster's Customer Service Department at 1-405-745-6000 for specific information on the current design and specifications. Statements and other information contained herein are not express warranties and do not form the basis of any bargain between the parties, but are merely ClimateMaster's opinion or commendation of its products. The latest version of this document is available at **climatemaster.com**.

TC - Horizontal Service Access

Left Return Back Discharge

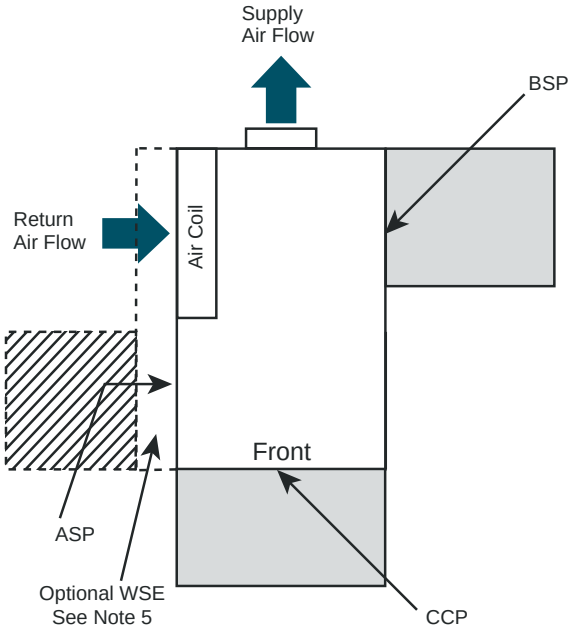

Right Return Back Discharge

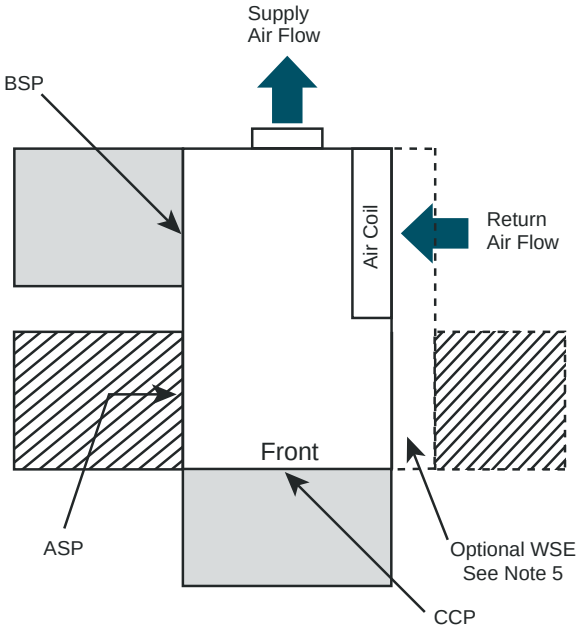

Left Return Straight Discharge

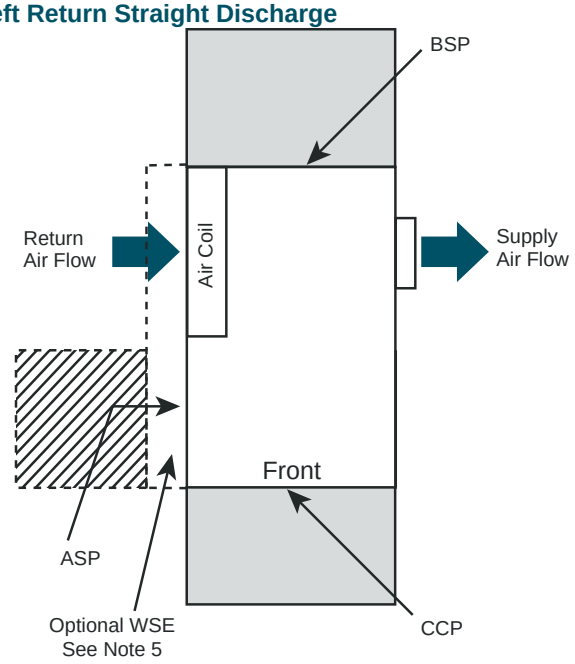

Right Return Straight Discharge

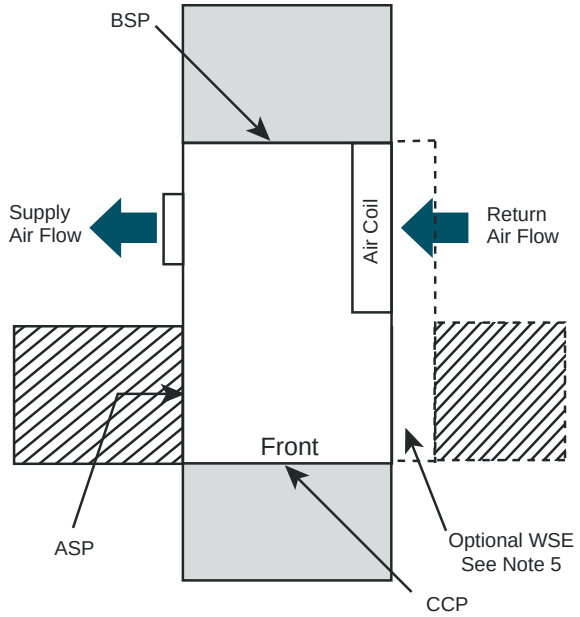

= mandatory 2′ service access

= (optional) additional 2′ service access

Notes:

1. While clear access to all removable panels is not required, installer should take care to comply with all building codes and allow adequate clearance for future field service.
2. CCP and BSP requires 2' service access.
3. Blower service access is through back panel on straight discharge units or through panel opposite air coil on back discharge units.
4. ASP are removable panels that provide additional access to the units interior. Clear access to ASP panels is not required and they are not to be used in place of the mandatory CCP and BSP panels.
5. Units with WSE must have access to water valve through side access panel.

Legend:
CCP = Control/Compressor Access Panel
BSP = Blower Service Panel
ASP = Additional Service Panel (not required)
WSE = Waterside Economizer

ClimateMaster works continually to improve its products. As a result, the design and specifications of each product at the time of order may be changed without notice and may not be as described herein. Please contact ClimateMaster's Customer Service Department at 1-405-745-6000 for specific information on the current design and specifications. Statements and other information contained herein are not express warranties and do not form the basis of any bargain between the parties, but are merely ClimateMaster's opinion or commendation of its products. The latest version of this document is available at **climatemaster.com**.

TCV with Left Hand Waterside Economizer-Dimensional Data

Horizontal Model		Overall Cabinet			WSE	WSE Connections							Return Connection Using Return Air Opening			
		A Width	B Length	C Height	H Width	In		Out		Cond. 3/4" FBT		Water In/Out FPT	Q Return Width	R Return Height	S	T
						D	E	F	G	AA	BB					
006-012	in	26.1	21.2	22.0	7.1	8.1	5.5	2.1	5.5	5.1	5.5	1/2"	16.1	10.0	4.2	0.4
	cm	66.3	53.8	55.9	18.0	20.6	14.0	5.3	14.0	13.0	14.0		40.9	25.4	10.7	1.0
015-018	in	28.9	23.2	38.9	7.4	10.8	6.0	2.6	6.0	7.1	6.0	1/2"	18.1	20.0	3.8	0.3
	cm	73.4	58.9	98.8	18.8	27.4	15.2	6.6	15.2	18.0	15.2		46.0	50.8	9.7	0.8
024-030	in	29.0	24.7	40.0	7.4	11.6	6.0	2.6	6.0	7.1	6.0	3/4"	18.1	20.0	3.8	0.3
	cm	73.7	62.7	101.6	18.8	29.5	15.2	6.6	15.2	18.0	15.2		46.0	50.8	9.7	0.8
036-042	in	29.0	28.7	45.0	7.4	12.1	6.0	2.6	6.0	7.1	6.0	3/4"	22.7	24.0	4.6	0.1
	cm	73.7	72.9	114.3	18.8	29.5	15.2	6.6	15.2	18.0	15.2		57.7	61.0	11.7	0.3
048-060	in	31.2	37.2	46.0	7.0	12.1	5.8	3.1	5.8	7.1	5.8	3/4"	29.3	24.0	5.0	0.1
	cm	79.2	94.5	116.8	17.8	30.7	14.7	7.9	14.7	18.0	14.7		74.4	61.0	12.7	0.3

Left Return TCV with WSE

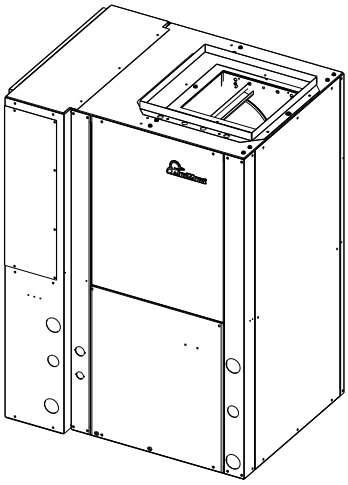

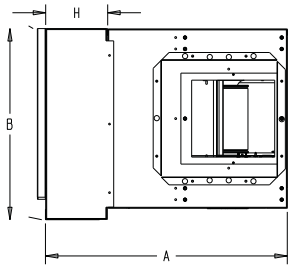

Top View

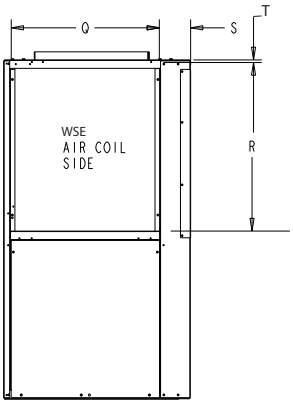

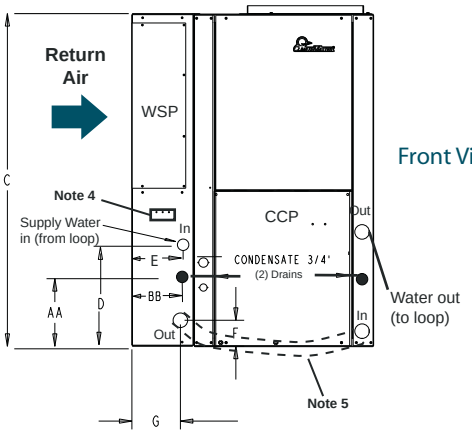

Front View Left Return

Notes:

1. Units are shipped with air filter rails that are not suitable for supporting return air ductwork. An air filter frame with duct mounting collar is available as an accessory, see the Climate Master Accessory Submittal set for futher information on this frame.
2. Condensate drains are 3/4" FPT, both are internally trapped, externally vent both drains before joining.
3. Filters same size as standard unit.
4. Factory supplied controller (aquastat) is shipped inside unit, open waterside economizer panel (WSP), remove, slide onto dinrail, and connect molex.
5. WSE to unit piping to be field fabricated, run below or in front. Must leave room to remove front access panel (CCP) to service unit.

ClimateMaster works continually to improve its products. As a result, the design and specifications of each product at the time of order may be changed without notice and may not be as described herein. Please contact ClimateMaster's Customer Service Department at 1-405-745-6000 for specific information on the current design and specifications. Statements and other information contained herein are not express warranties and do not form the basis of any bargain between the parties, but are merely ClimateMaster's opinion or commendation of its products. The latest version of this document is available at **climatemaster.com**.

TCV with Right Hand Waterside Economizer-Dimensional Data

Horizontal Model		Overall Cabinet			WSE	WSE Connections							Return Connection Using Return Air Opening			
		A Width	B Length	C Height	H Width	In		Out		Cond. 3/4" FBT		Water In/Out FPT	Q Return Width	R Return Height	S	T
						D	E	F	G	AA	BB					
006-012	in	26.1	21.2	22.0	7.1	2.1	5.5	8.1	5.5	5.1	5.5	1/2"	16.1	10.0	4.2	0.4
	cm	66.3	53.8	55.9	18.0	5.3	14.0	20.6	14.0	13.0	14.0		40.9	25.4	10.7	1.0
015-018	in	28.9	23.2	38.9	7.4	2.6	6.0	10.8	6.0	7.1	6.0	1/2"	18.1	20.0	3.8	0.3
	cm	73.4	58.9	98.8	18.8	6.6	15.2	27.4	15.2	18.0	15.2		46.0	50.8	9.7	0.8
024-030	in	29.0	24.7	40.0	7.4	2.6	6.0	11.6	6.0	7.1	6.0	3/4"	18.1	20.0	3.8	0.3
	cm	73.7	62.7	101.6	18.8	6.6	15.2	29.5	15.2	18.0	15.2		46.0	50.8	9.7	0.8
036-042	in	29.0	28.7	45.0	7.4	2.6	6.0	12.1	6.0	7.1	6.0	3/4"	22.7	24.0	4.6	0.1
	cm	73.7	72.9	114.3	18.8	6.6	15.2	29.5	15.2	18.0	15.2		57.7	61.0	11.7	0.3
048-060	in	31.2	37.2	46.0	7.0	3.1	5.8	12.1	5.8	7.1	5.8	3/4"	29.3	24.0	5.0	0.1
	cm	79.2	94.5	116.8	17.8	7.9	14.7	30.7	14.7	18.0	14.7		74.4	61.0	12.7	0.3

Right Return TCV with WSE

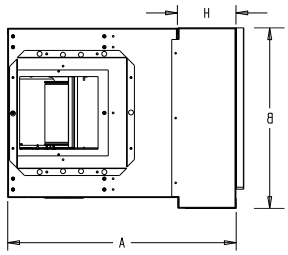

Top View

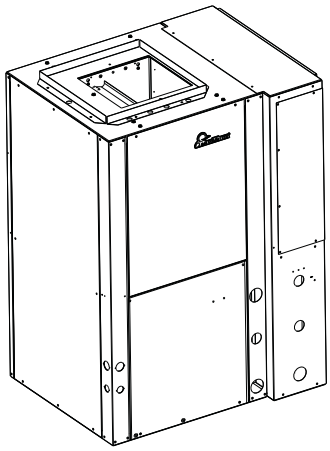

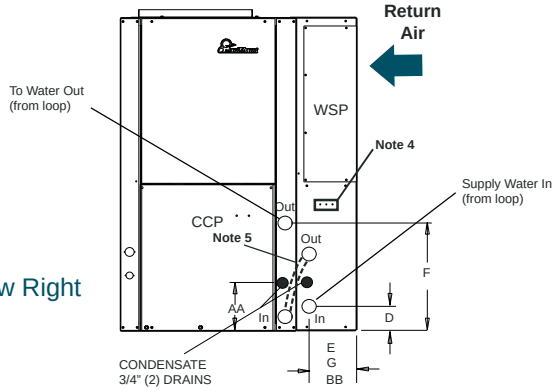

Front View Right Return

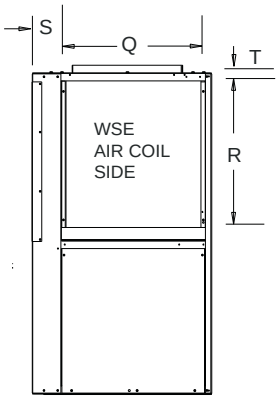

Notes:

1. Units are shipped with air filter rails that are not suitable for supporting return air ductwork. An air filter frame with duct mounting collar is available as an accessory, see the Climate Master Accessory Submittal set for futher information on this frame.
2. Condensate drains are 3/4" FPT, both are internally trapped, externally vent both drains before joining.
3. Filters same size as standard unit.
4. Factory supplied controller (aquastat) is shipped inside unit, open waterside economizer panel (WSP), remove, slide onto dinrail, and connect molex.
5. WSE to unit piping to be field fabricated below or in front. Must leave room to remove front access panel(CCP) to service unit.

ClimateMaster works continually to improve its products. As a result, the design and specifications of each product at the time of order may be changed without notice and may not be as described herein. Please contact ClimateMaster's Customer Service Department at 1-405-745-6000 for specific information on the current design and specifications. Statements and other information contained herein are not express warranties and do not form the basis of any bargain between the parties, but are merely ClimateMaster's opinion or commendation of its products. The latest version of this document is available at **climatemaster.com**.

TC - Vertical Upflow – Dimensional Data

Vertical Upflow Model		Overall Cabinet		
		A Width	B Depth	C Height
006 - 012	in	19.1	19.1	22.0
	cm	48.5	48.5	55.9
015 - 018	in	21.5	21.5	39.0
	cm	54.6	54.6	99.1
024 - 030, 041	in	21.5	21.5	40.0
	cm	54.6	54.6	101.6
036 - 042	in	21.5	26.0	45.0
	cm	54.6	66.0	114.3
048 - 060	in	24.0	32.5	46.0
	cm	61.0	82.6	116.8

Vertical Model		Electrical Knockouts		
		J 1/2”	K 1/2”	L 3/4”
		Low Voltage	Low Voltage	Power Supply
006 - 012	in	2.9	5.9	8.9
	cm	7.3	14.9	22.5
015 - 060	in	4.1	7.1	10.1
	cm	10.5	18.1	25.7
041	in	3.1	7.1	11.1
	cm	7.9	18.0	28.2

Vertical Upflow Model		Water Connections - Standard Units						
		1		2		3		
		Loop In D	Loop In E	Loop Out F	Loop Out G	Cond. 3/4” FPT H	Cond. 3/4” FPT I	Loop In/Out FPT
006 - 012	in	1.4	1.6	9.5	1.6	6.1	1.6	1/2”
	cm	3.6	4.1	24.1	4.3	15.6	4.1	
015	in	1.9	1.4	13.8	1.4	8.1	1.4	1/2”
	cm	4.8	3.6	35.1	3.6	20.6	3.6	
018	in	1.9	1.4	12.9	1.4	8.1	1.4	1/2”
	cm	4.8	3.6	32.8	3.6	20.6	3.6	
024	in	1.9	1.4	13.8	1.4	8.1	1.4	3/4”
	cm	4.8	3.6	35.1	3.6	20.6	3.6	
030	in	1.9	1.4	15.2	1.4	8.1	1.4	3/4”
	cm	4.8	3.6	38.6	3.6	20.6	3.6	
036	in	1.9	1.4	15.7	1.4	8.1	1.4	3/4”
	cm	4.8	3.6	39.9	3.6	20.6	3.6	
041	in	3.6	2.3	14.0	2.3	8.1	2.3	3/4”
	cm	4.8	5.8	35.6	5.8	20.6	5.8	
042	in	1.9	1.4	16.6	1.4	8.1	1.4	3/4”
	cm	4.8	3.6	42.0	3.6	20.6	3.6	
048	in	1.9	1.4	16.6	1.4	8.1	1.4	1”
	cm	4.8	3.6	42.2	3.6	20.6	3.6	
060	in	1.9	1.4	17.2	1.4	8.1	1.4	1”
	cm	4.8	3.6	43.7	3.6	20.6	3.6	

Notes:
1. While clear access to all removable panels is not required, installer should take care to comply with all building codes and allow adequate clearance for future field service.
2. Front & Side access is preferred for service access. However, all components may be serviced from the front access panel if side access is not available. (Except on TCV 009-030 and 041 with front return) Units with the front return require left side access for the fan.
3. Discharge flange is field installed.
4. Condensate is 3/4” FPT.
5. Units are shipped with air filter rails that are not suitable for supporting return air ductwork. An air filter frame with duct mounting collar is available as an accessory, see the ClimateMaster Accessory Submittal set for futher information on this frame.

Legend:
CCP = Control/Compressor Access Panel
BSP = Blower Service Panel
ASP = Alternative Service Panel

Recommended Minimum Installation Clearances for Vertical Units*	
1”	Back of unit
	Side opposite return air
6”	Front if hard piped
	Return Air Side
1”	Ducted return - ‡ *Add for duct width - † Add 2” for 1” filter frame/rail or 3” for 2” filter frame/rail
	Free (open) return - calculate required dimension for a maximum velocity of 600 fpm

*Field installed accessories (hoses, air cleaners, etc.) and factory WSE option will require additional space. Top supply air is shown, the same clearances apply to bottom supply air units.

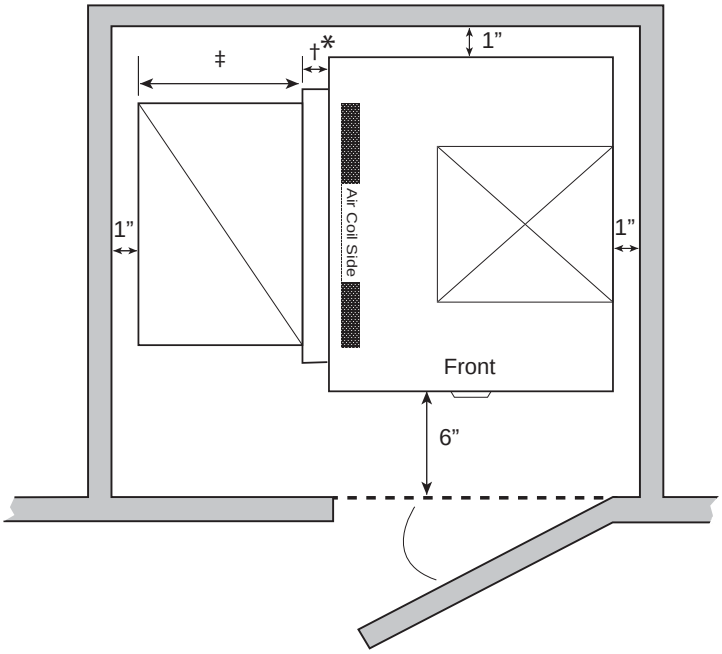

ClimateMaster works continually to improve its products. As a result, the design and specifications of each product at the time of order may be changed without notice and may not be as described herein. Please contact ClimateMaster's Customer Service Department at 1-405-745-6000 for specific information on the current design and specifications. Statements and other information contained herein are not express warranties and do not form the basis of any bargain between the parties, but are merely ClimateMaster's opinion or commendation of its products. The latest version of this document is available at **climatemaster.com**.

TC - Vertical Upflow – Dimensional Data

Vertical Model		Discharge Connection Duct Flange Installed (+/- 0.10 in, +/- 2.5mm)					Return Connection Using Return Air Opening			
		M	N	O Supply Width	P Supply Depth	Q	R	S Return Depth	T Return Height	U
006 - 012	in	8.9	5.1	9.0	9.0	5.5	2.1	16.2	9.9	0.7
	cm	22.7	12.9	22.9	22.9	14.0	5.3	41.1	25.1	1.9
015 - 018	in	6.4	3.8	14.0	14.0	5.3	2.3	18.3	20.9	0.7
	cm	16.1	9.5	35.6	35.6	13.6	5.8	46.5	53.1	1.9
024 - 030, *041	in	6.4	5.0	14.0	14.0	5.8	2.0	18.5	19.3	0.9
	cm	16.3	12.7	35.6	35.6	14.7	5.1	47.0	49.0	2.3
036 - 042	in	6.4	3.8	14.0	14.0	5.1	2.3	22.8	23.9	0.7
	cm	16.1	9.5	35.6	35.6	13.1	5.8	57.9	60.7	1.9
048 - 060	in	6.9	7.3	16.0	18.0	5.1	2.3	29.3	22.5	0.7
	cm	17.4	18.4	40.6	45.7	13.1	5.8	74.4	57.0	1.9

* Size 041 units have unique M, N, Q dimensions due to the position of the blower assembly.
Front Return - N = 4.8 in (12.2 cm), Q = 6.4 in (16.3 cm).
Right Return - N = 3.8 in (9.7 cm), Q = 5.5 in (14.0 cm).
Left Return - M = 6.4 in (16.3 cm), N = 2.8 in (7.1 cm).

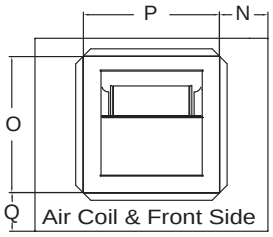

Top View-Front Return

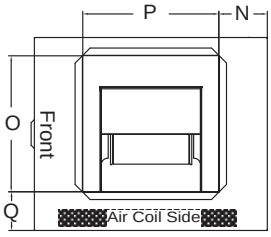

Top View-Right Return

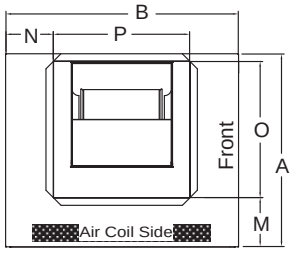

Top View-Left Return

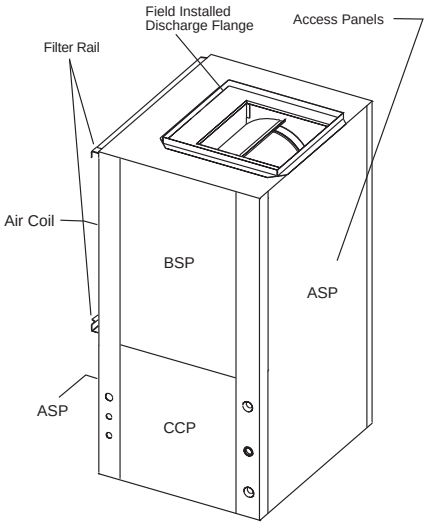

Isometric View

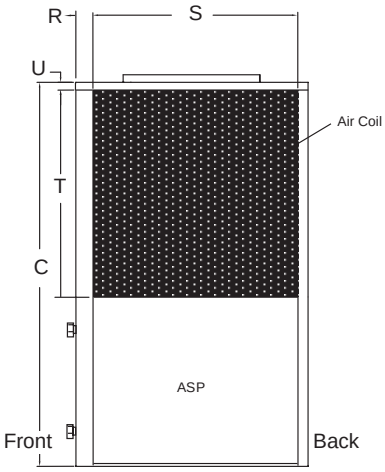

Right Return Right View - Air Coil Opening

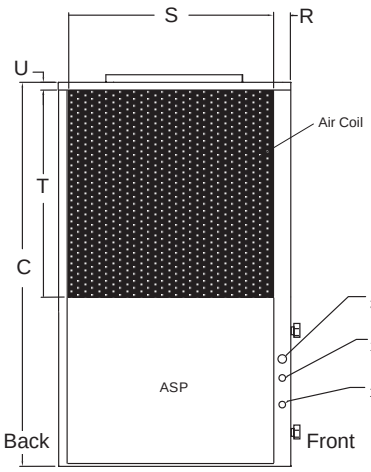

Left Return Left View - Air Coil Opening

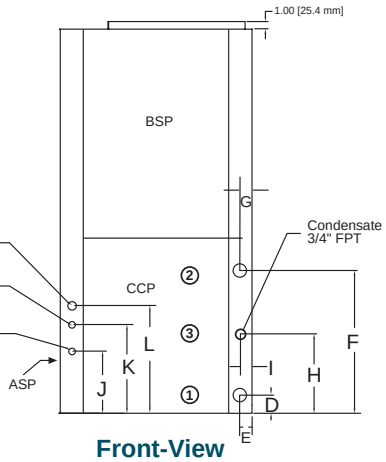

Front-View

Units are shipped with air filter rails that are not suitable for supporting return air ductwork. An air filter frame with duct mounting collar is available as an accessory, see the ClimateMaster Accessory Submittal set for futher information on this frame.

ClimateMaster works continually to improve its products. As a result, the design and specifications of each product at the time of order may be changed without notice and may not be as described herein. Please contact ClimateMaster's Customer Service Department at 1-405-745-6000 for specific information on the current design and specifications. Statements and other information contained herein are not express warranties and do not form the basis of any bargain between the parties, but are merely ClimateMaster's opinion or commendation of its products. The latest version of this document is available at **climatemaster.com**.

Vertical Units

Left Return

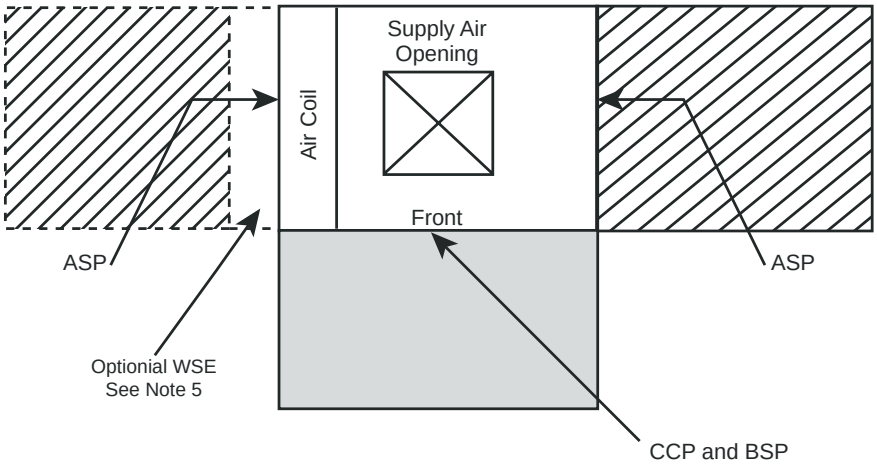

Right Return

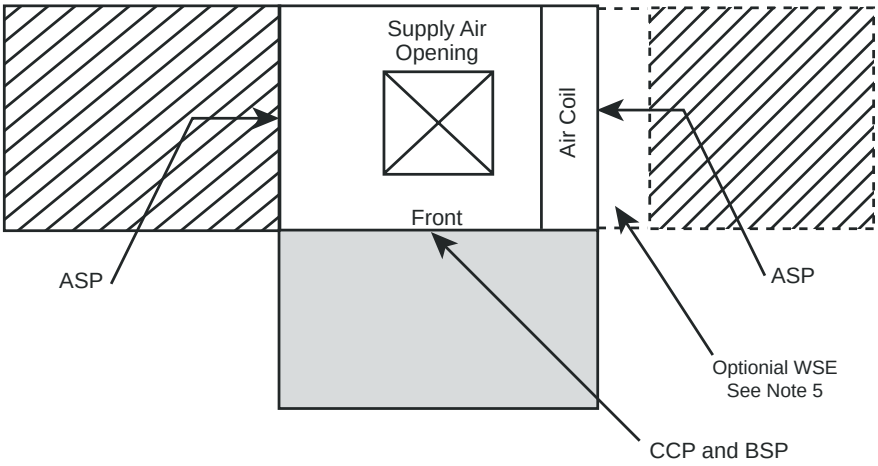

Notes:
1. While clear access to all removable panels is not required, installer should take care to comply with all building codes and allow adequate clearance for future field service.
2. Front & Side access is preferred for service access. However, units without WSE option may be serviced from the front access panel if side access is not available.
3. ASP are removable panels that provide additional access to the units interior. Clear access to ASP panels is not required and they are not to be used in place of the mandatory CCP and BSP panels.
4. Front return units (not shown) require front access for controls/compressor and left side access for blower.
5. Units with WSE Must have access to water valve through side access panel.

= mandatory 2′ service access

= (optional) additional 2′ service access

Legend:
CCP = Control/Compressor Access Panel
BSP = Blower Service Panel
ASP = Additional Service Panel (not required)
WSE = Waterside Economizer

ClimateMaster works continually to improve its products. As a result, the design and specifications of each product at the time of order may be changed without notice and may not be as described herein. Please contact ClimateMaster's Customer Service Department at 1-405-745-6000 for specific information on the current design and specifications. Statements and other information contained herein are not express warranties and do not form the basis of any bargain between the parties, but are merely ClimateMaster's opinion or commendation of its products. The latest version of this document is available at **climatemaster.com**.

Corner Weights for TCH Series Units

Model		Total	Left-Front*	Right-Front*	Left-Back*	Right-Back*
TCH006	Lbs	103	37	24	23	19
	kg	46.72	16.78	10.89	10.43	8.62
TCH009	Lbs	105	38	24	23	20
	kg	47.63	17.24	10.89	10.43	9.07
TCH012	Lbs	114	42	26	25	21
	kg	51.71	19.05	11.79	11.34	9.53
TCH015	Lbs	153	53	36	34	30
	kg	69	24	16	15	14
TCH018	Lbs	158	55	37	35	31
	kg	72	25	17	16	14
TCH024	Lbs	174	62	40	39	33
	kg	79	28	18	18	15
TCH030	Lbs	182	67	41	40	34
	kg	83	30	19	18	15
TCH036	Lbs	203	75	47	44	37
	kg	92	34	21	20	17
TCH042	Lbs	218	81	50	48	39
	kg	99	37	23	22	18
TCH048	Lbs.	263	98	60	58	47
	kg	119	44	27	26	21
TCH060	Lbs.	278	94	59	56	69
	kg	126	43	27	25	31

*Front is control box end.

ClimateMaster works continually to improve its products. As a result, the design and specifications of each product at the time of order may be changed without notice and may not be as described herein. Please contact ClimateMaster's Customer Service Department at 1-405-745-6000 for specific information on the current design and specifications. Statements and other information contained herein are not express warranties and do not form the basis of any bargain between the parties, but are merely ClimateMaster's opinion or commendation of its products. The latest version of this document is available at **climatemaster.com**.

Electrical Data – Standard Unit

Model	Voltage Code	Rated Voltage	Voltage Min/ Max	Compressor			Fan Motor FLA	Total Unit FLA	Min Circuit Amp	Max Fuse/ HACR
				QTY	RLA	LRA				
006	G	208/230/60/1	197/254	1	3.3	17.7	0.40	3.7	4.5	15
	E	265/60/1	239/292	1	2.9	13.5	0.40	3.3	4.0	15
009	G	208/230/60/1	197/254	1	4.5	22.2	0.92	5.4	6.5	15
	E	265/60/1	239/292	1	3.8	18.8	0.70	4.5	5.5	15
012	G	208/230/60/1	197/254	1	5.1	32.5	0.92	6.0	7.3	15
	E	265/60/1	239/292	1	4.0	31.5	0.70	4.7	5.7	15
015	G	208/230/60/1	197/254	1	6.0	29.0	1.20	7.2	8.7	15
	E	265/60/1	239/292	1	5.4	28.0	0.86	6.3	7.6	15
018	G	208/230/60/1	197/254	1	7.2	33.0	1.20	8.4	10.2	15
	E	265/60/1	239/292	1	5.9	28.0	0.86	6.8	8.2	15
024	G	208/230/60/1	197/254	1	12.8	58.3	1.50	14.3	17.5	30
	E	265/60/1	239/292	1	9.6	54.0	1.30	10.9	13.3	20
	H	208/230/60/3	197/254	1	7.7	55.4	1.50	9.2	11.1	15
	F	460/60/3	414/506	1	3.6	28.0	0.76	4.4	5.3	15
030	G	208/230/60/1	197/254	1	14.1	73.0	3.00	17.1	20.6	30
	E	265/60/1	239/292	1	11.2	60.0	2.70	13.9	16.7	25
	H	208/230/60/3	197/254	1	8.9	58.0	3.00	11.9	14.1	20
	F	460/60/3	414/506	1	4.2	28.0	1.70	5.9	7.0	15
036	G	208/230/60/1	197/254	1	16.7	79.0	1.80	18.5	22.7	35
	E	265/60/1	239/292	1	13.5	72.0	2.00	15.5	18.9	30
	H	208/230/60/3	197/254	1	10.4	73.0	1.80	12.2	14.8	25
	F	460/60/3	414/506	1	5.8	38.0	1.24	7.0	8.5	15
041	G	208/230/60/1	197/254	1	17.9	112.0	3.00	20.9	25.4	40
	H	208/230/30/3	197/294	1	13.2	88.0	3.00	16.2	19.5	30
	F	460/60/3	414/506	1	6.0	44.0	1.70	7.7	9.2	15
	N	575/60/3	518/633	1	4.2	30.0	1.40	5.6	6.7	15
042	G	208/230/60/1	197/254	1	17.9	112.0	3.00	20.9	25.4	40
	H	208/230/60/3	197/254	1	13.5	88.0	3.00	16.5	19.9	30
	F	460/60/3	414/506	1	6.0	44.0	1.70	7.7	9.2	15
	N	575/60/3	518/633	1	4.9	34.0	1.40	6.3	7.5	15
048	G	208/230/60/1	197/254	1	21.8	117.0	3.40	25.2	30.7	50
	H	208/230/60/3	197/254	1	13.7	83.1	3.40	17.1	20.5	30
	F	460/60/3	414/506	1	6.2	41.0	1.80	8.0	9.6	15
	N	575/60/3	518/633	1	4.8	33.0	1.40	6.2	7.4	15
060	G	208/230/60/1	197/254	1	26.3	134.0	4.90	31.2	37.8	60
	H	208/230/60/3	197/254	1	15.6	110.0	4.90	20.5	24.4	40
	F	460/60/3	414/506	1	7.8	52.0	2.50	10.3	12.3	20
	N	575/60/3	518/633	1	5.8	38.9	1.90	7.7	9.2	15

All fuses Class RK-5

ClimateMaster works continually to improve its products. As a result, the design and specifications of each product at the time of order may be changed without notice and may not be as described herein. Please contact ClimateMaster's Customer Service Department at 1-405-745-6000 for specific information on the current design and specifications. Statements and other information contained herein are not express warranties and do not form the basis of any bargain between the parties, but are merely ClimateMaster's opinion or commendation of its products. The latest version of this document is available at **climatemaster.com**.

Electrical Data – High Static Blower

TC Model	Voltage Code	Rated Voltage	Voltage Min/Max	Compressor			Fan Motor FLA	Total Unit FLA	Min Circuit Amp	Max Fuse/ HACR
				QTY	RLA	LRA				
015	G	208/230/60/1	197/254	1	6.0	29.0	1.20	7.2	8.7	15
	E	265/60/1	239/292	1	5.4	28.0	0.86	6.3	7.6	15
018	G	208/230/60/1	197/254	1	7.2	33.0	1.50	8.7	10.5	15
	E	265/60/1	239/292	1	5.9	28.0	1.30	7.2	8.7	15
024	G	208/230/60/1	197/254	1	12.8	58.3	1.50	14.3	17.5	30
	E	265/60/1	239/292	1	9.6	54.0	1.30	10.9	13.3	20
	H	208/230/60/3	197/254	1	7.7	55.4	1.50	9.2	11.1	15
	F	460/60/3	414/506	1	3.6	28.0	0.76	4.4	5.3	15
030	G	208/230/60/1	197/254	1	14.1	73.0	3.00	17.1	20.6	30
	E	265/60/1	239/292	1	11.2	60.0	2.70	13.9	16.7	25
	H	208/230/60/3	197/254	1	8.9	58.0	3.00	11.9	14.1	20
	F	460/60/3	414/506	1	4.2	28.0	1.70	5.9	7.0	15
036	G	208/230/60/1	197/254	1	16.7	79.0	3.00	19.7	23.9	40
	E	265/60/1	239/292	1	13.5	72.0	2.70	16.2	19.6	30
	H	208/230/60/3	197/254	1	10.4	73.0	3.00	13.4	16.0	25
	F	460/60/3	414/506	1	5.8	38.0	1.70	7.5	9.0	15
042	G	208/230/60/1	197/254	1	17.9	112.0	3.00	20.9	25.4	40
	H	208/230/60/3	197/254	1	13.5	88.0	3.00	16.5	19.9	30
	F	460/60/3	414/506	1	6.0	44.0	1.70	7.7	9.2	15
	N	575/60/3	518/633	1	4.9	34.0	1.40	6.3	7.5	15
048	G	208/230/60/1	197/254	1	21.8	117.0	4.90	26.7	32.2	50
	H	208/230/60/3	197/254	1	13.7	83.1	4.90	18.6	22.0	35
	F	460/60/3	414/506	1	6.2	41.0	2.50	8.7	10.3	15
	N	575/60/3	518/633	1	4.8	33.0	1.90	6.7	7.9	15
060	G	208/230/60/1	197/254	1	26.3	134.0	5.80	32.1	38.7	60
	H	208/230/60/3	197/254	1	15.6	110.0	5.80	21.4	25.3	40
	F	460/60/3	414/506	1	7.8	52.0	2.60	10.4	12.4	20
	N	575/60/3	518/633	1	5.8	38.9	2.30	8.1	9.6	15

All fuses Class RK-5

ClimateMaster works continually to improve its products. As a result, the design and specifications of each product at the time of order may be changed without notice and may not be as described herein. Please contact ClimateMaster's Customer Service Department at 1-405-745-6000 for specific information on the current design and specifications. Statements and other information contained herein are not express warranties and do not form the basis of any bargain between the parties, but are merely ClimateMaster's opinion or commendation of its products. The latest version of this document is available at **climatemaster.com**.

TC Model	Voltage Code	Rated Voltage	Voltage Min/Max	Compressor			Fan Motor FLA	Total Unit FLA	Min Circuit Amp	Max Fuse/ HACR
				RLA	LRA	QTY				
015	G	208/230/60/1	197/254	6.0	29.0	1	2.70	8.7	10.2	15
	E	265/60/1	239/292	5.4	28.0	1	2.10	7.5	8.9	15
018	G	208/230/60/1	197/254	7.2	33.0	1	2.70	9.9	11.7	15
	E	265/60/1	239/292	5.9	28.0	1	2.10	8.0	9.5	15
024	G	208/230/60/1	197/254	12.8	58.3	1	3.90	16.7	19.9	30
	E	265/60/1	239/292	9.6	54.0	1	3.20	12.8	15.2	20
	H	208/230/60/3	197/254	7.7	55.4	1	3.90	11.6	13.5	20
	*F	*460/60/3	414/506	3.6	28.0	1	3.20	6.8	7.7	15
030	G	208/230/60/1	197/254	14.1	73.0	1	3.90	18.0	21.5	35
	E	265/60/1	239/292	11.2	60.0	1	3.20	14.4	17.2	25
	H	208/230/60/3	197/254	8.9	58.0	1	3.90	12.8	15.0	20
	*F	*460/60/3	414/506	4.2	28.0	1	3.20	7.4	8.5	15
036	G	208/230/60/1	197/254	16.7	79.0	1	5.20	21.9	26.1	40
	E	265/60/1	239/292	13.5	72.0	1	4.70	18.2	21.6	35
	H	208/230/60/3	197/254	10.4	73.0	1	5.20	15.6	18.2	25
	*F	*460/60/3	414/506	5.8	38.0	1	4.70	10.5	12.0	15
042	G	208/230/60/1	197/254	17.9	112.0	1	5.20	23.1	27.6	45
	H	208/230/60/3	197/254	13.5	88.0	1	5.20	18.7	22.1	35
	*F	*460/60/3	414/506	6.0	44.0	1	4.70	10.7	12.2	15
048	G	208/230/60/1	197/254	21.8	117.0	1	6.90	28.7	34.2	50
	H	208/230/60/3	197/254	13.7	83.1	1	6.90	20.6	24.0	35
	*F	*460/60/3	414/506	6.2	41.0	1	6.00	12.2	13.8	20
060	G	208/230/60/1	197/254	26.3	134.0	1	6.90	33.2	39.8	60
	H	208/230/60/3	197/254	15.6	110.0	1	6.90	22.5	26.4	40
	*F	*460/60/3	414/506	7.8	52.0	1	6.00	13.8	15.8	20

* 460 volt units require a neutral connection. All "F" voltage units with ECM require a four wire power supply with neutral.
Motors are 265 volt and are wired between one hot leg and neutral.

All fuses Class RK-5

ClimateMaster works continually to improve its products. As a result, the design and specifications of each product at the time of order may be changed without notice and may not be as described herein. Please contact ClimateMaster's Customer Service Department at 1-405-745-6000 for specific information on the current design and specifications. Statements and other information contained herein are not express warranties and do not form the basis of any bargain between the parties, but are merely ClimateMaster's opinion or commendation of its products. The latest version of this document is available at **climatemaster.com**.

TC Series Wiring Diagram Matrix

All current diagrams can be located online at climatemaster.com. Click 'Commercial Professional' (go to 'Resources/literature/wiring diagrams' in the upper right), use part numbers below to lookup wiring diagrams

Model	Wiring Diagram Part Number	Electrical	Control	DDC	Fan Motor
TC Series Standard	96B0228N77	208/230/60/1 265/60/1	CXM	-	ECM
	96B0228N81			LON	
	96B0228N79			MPC	
	96B0228N01			-	PSC
	96B0228N03			LON	
	96B0228N09			MPC	
	96B0228N78		DXM	-	ECM
	96B0228N82			LON	
	96B0228N80			MPC	
	96B0228N02			-	PSC
	96B0228N04			LON	
	96B0228N10			MPC	
TC Series Standard	96B0229N11	208/230/60/3	CXM	-	ECM
	96B0229N13			LON	
	96B0229N16			MPC	
	96B0229N01			-	PSC
	96B0229N03			LON	
	96B0229N06			MPC	
	96B0229N12		DXM	-	ECM
	96B0229N14			LON	
	96B0229N17			MPC	
	96B0229N02			-	PSC
	96B0229N04			LON	
	96B0229N07			MPC	
TC Series Standard	96B0230N11	460/60/3	CXM	-	ECM
	96B0230N13			LON	
	96B0230N18			MPC	
	96B0230N01			-	PSC
	96B0230N03			LON	
	96B0230N08			MPC	
	96B0230N12		DXM	-	ECM
	96B0230N14			LON	
	96B0230N19			MPC	
	96B0230N02			-	PSC
	96B0230N04			LON	
	96B0230N09			MPC	

Table Continued on Next Page

ClimateMaster works continually to improve its products. As a result, the design and specifications of each product at the time of order may be changed without notice and may not be as described herein. Please contact ClimateMaster's Customer Service Department at 1-405-745-6000 for specific information on the current design and specifications. Statements and other information contained herein are not express warranties and do not form the basis of any bargain between the parties, but are merely ClimateMaster's opinion or commendation of its products. The latest version of this document is available at **climatemaster.com**.

Table Continued From Previous Page

Model	Wiring Diagram Part Number	Electrical	Control	DDC	Fan Motor
TC with WSE option	96B0300N05	208/230/60/1 265/60/1	CXM	-	ECM
	96B0300N01			-	PSC
	96B0300N06		DXM	-	ECM
	96B0300N07			LON	
	96B0300N08			MPC	
	96B0300N02			-	PSC
	96B0300N03			LON	
	96B0300N04			MPC	
TC with WSE option	96B0301N05	208/230/60/3	CXM	-	ECM
	96B0301N01			-	PSC
	96B0301N06		DXM	-	ECM
	96B0301N07			LON	
	96B0301N08			MPC	
	96B0301N02			-	PSC
	96B0301N03			LON	
	96B0301N04			MPC	
TC with WSE option	96B0302N05	460/60/3	CXM	-	ECM
	96B0302N01			-	PSC
	96B0302N06		DXM	-	ECM
	96B0302N07			LON	
	96B0302N08			MPC	
	96B0302N02			-	PSC
	96B0302N03			LON	
	96B0302N04			MPC	

DIP Setting Table - 99D0061N01

Note: Shade indicates DIP switch locating

TC DIGIT 9 = D + DXM WSE
TC DIGIT 12 = 1,2,3,4 + DXM WSE

TC DIGIT 9 = M + DXM WSE + LON
TC DIGIT 12 = 1,2,3,4 + DXM WSE + LON

TC DIGIT 9 = P + DXM WSE + MPC
TC DIGIT 12 = 1,2,3,4 + DXM WSE + MPC

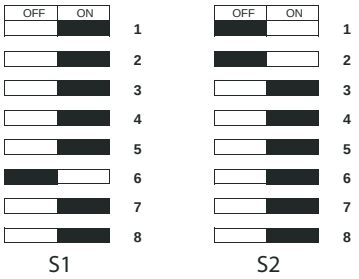

ClimateMaster works continually to improve its products. As a result, the design and specifications of each product at the time of order may be changed without notice and may not be as described herein. Please contact ClimateMaster's Customer Service Department at 1-405-745-6000 for specific information on the current design and specifications. Statements and other information contained herein are not express warranties and do not form the basis of any bargain between the parties, but are merely ClimateMaster's opinion or commendation of its products. The latest version of this document is available at **climatemaster.com**.

Typical Wiring Diagram – Single Phase TC Units with CXM Controller

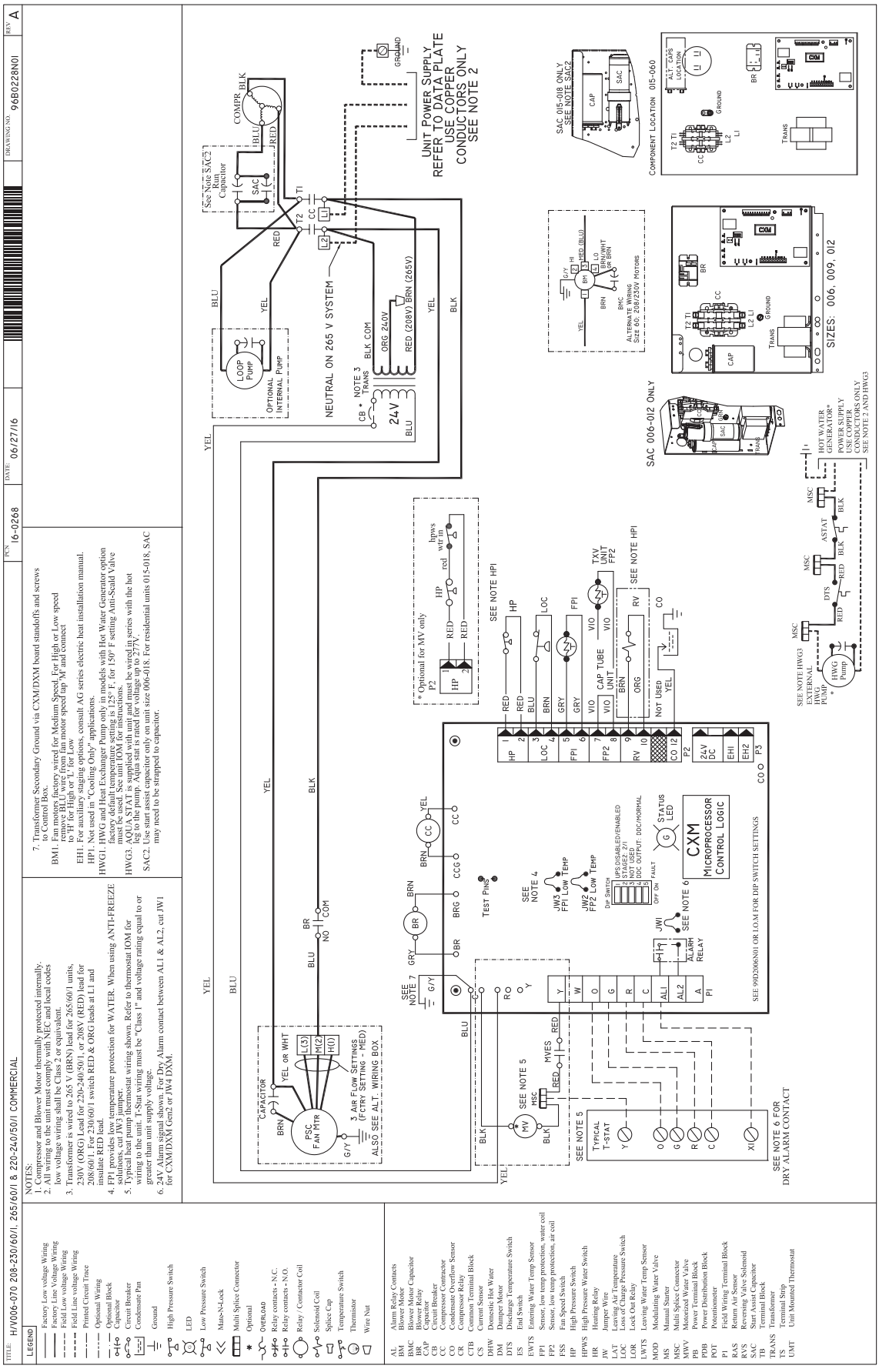

ClimateMaster works continually to improve its products. As a result, the design and specifications of each product at the time of order may be changed without notice and may not be as described herein. Please contact ClimateMaster's Customer Service Department at 1-405-745-6000 for specific information on the current design and specifications. Statements and other information contained herein are not express warranties and do not form the basis of any bargain between the parties, but are merely ClimateMaster's opinion or commendation of its products. The latest version of this document is available at **climatemaster.com**.

Typical Wiring Diagram – Single Phase TC Units with CXM Controller, ECM Blower

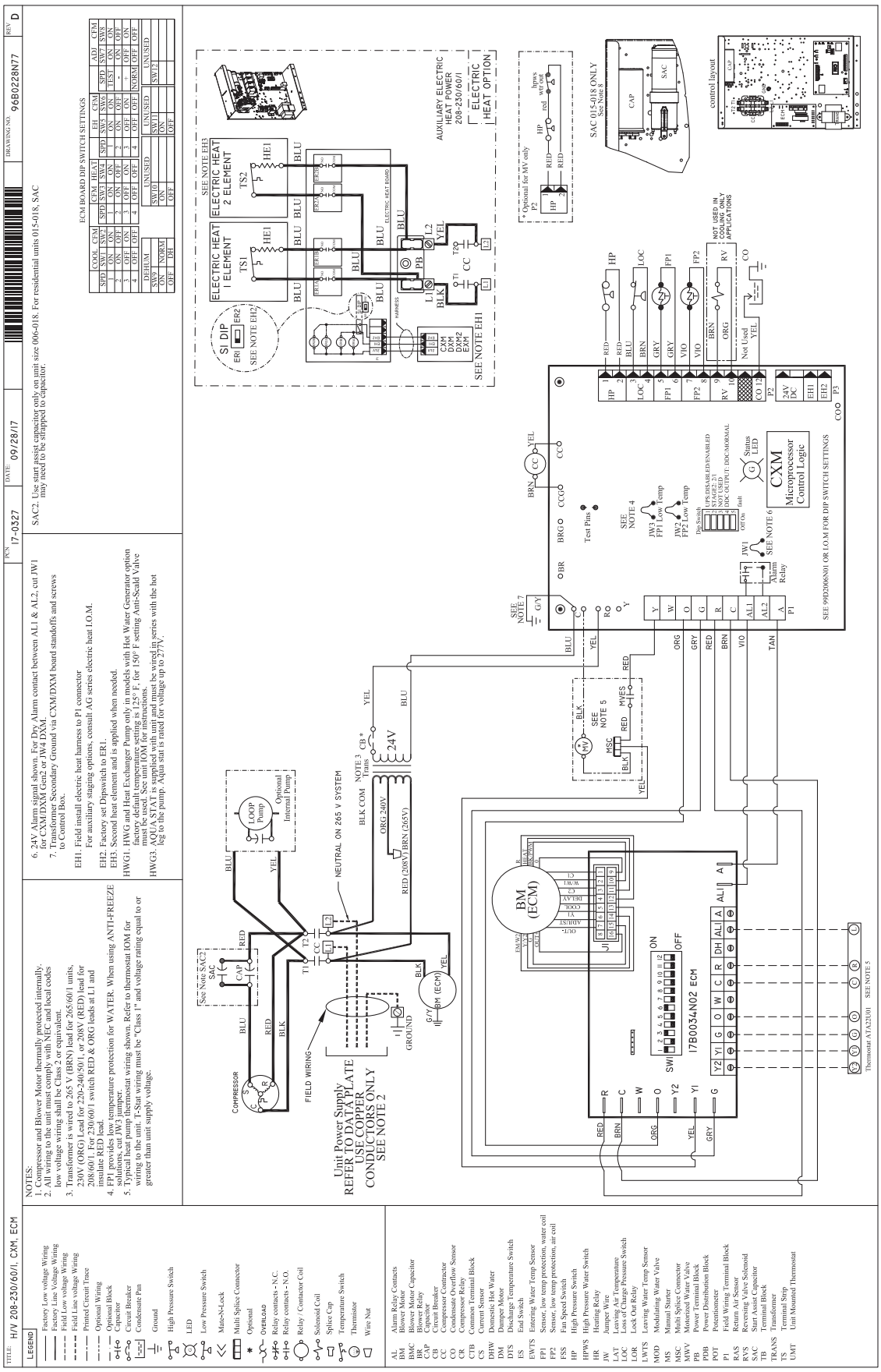

ClimateMaster works continually to improve its products. As a result, the design and specifications of each product at the time of order may be changed without notice and may not be as described herein. Please contact ClimateMaster's Customer Service Department at 1-405-745-6000 for specific information on the current design and specifications. Statements and other information contained herein are not express warranties and do not form the basis of any bargain between the parties, but are merely ClimateMaster's opinion or commendation of its products. The latest version of this document is available at **climatemaster.com**.

Typical Wiring Diagram – Three Phase 208/230V TC Units with CXM Controller

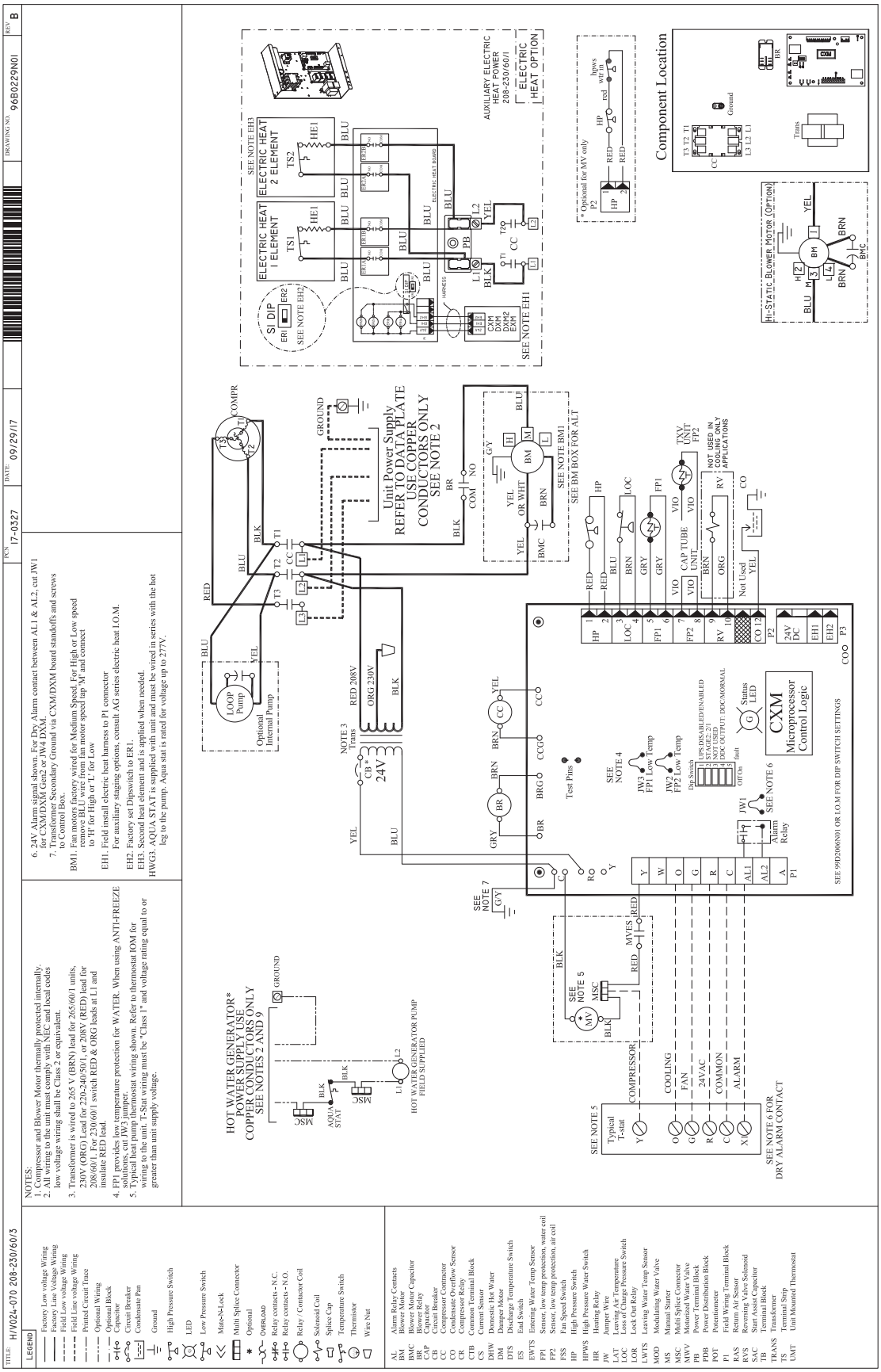

ClimateMaster works continually to improve its products. As a result, the design and specifications of each product at the time of order may be changed without notice and may not be as described herein. Please contact ClimateMaster's Customer Service Department at 1-405-745-6000 for specific information on the current design and specifications. Statements and other information contained herein are not express warranties and do not form the basis of any bargain between the parties, but are merely ClimateMaster's opinion or commendation of its products. The latest version of this document is available at **climatemaster.com**.

Typical Wiring Diagram – Three Phase 208/230V TC Units with DXM Controller

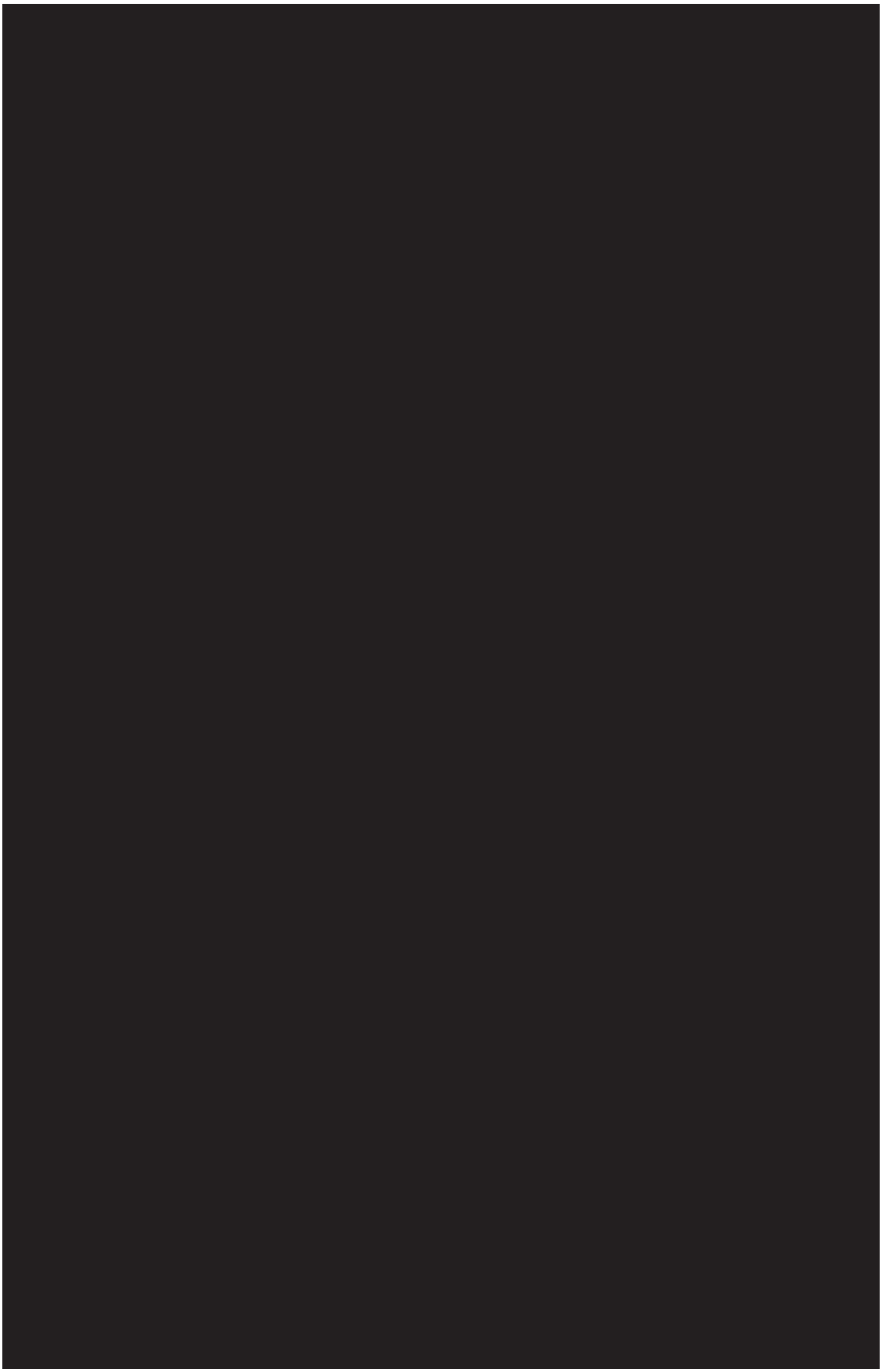

ClimateMaster works continually to improve its products. As a result, the design and specifications of each product at the time of order may be changed without notice and may not be as described herein. Please contact ClimateMaster's Customer Service Department at 1-405-745-6000 for specific information on the current design and specifications. Statements and other information contained herein are not express warranties and do not form the basis of any bargain between the parties, but are merely ClimateMaster's opinion or commendation of its products. The latest version of this document is available at **climatemaster.com**.

Typical Wiring Diagram – Three Phase 460/575V TC Units with CXM Controller

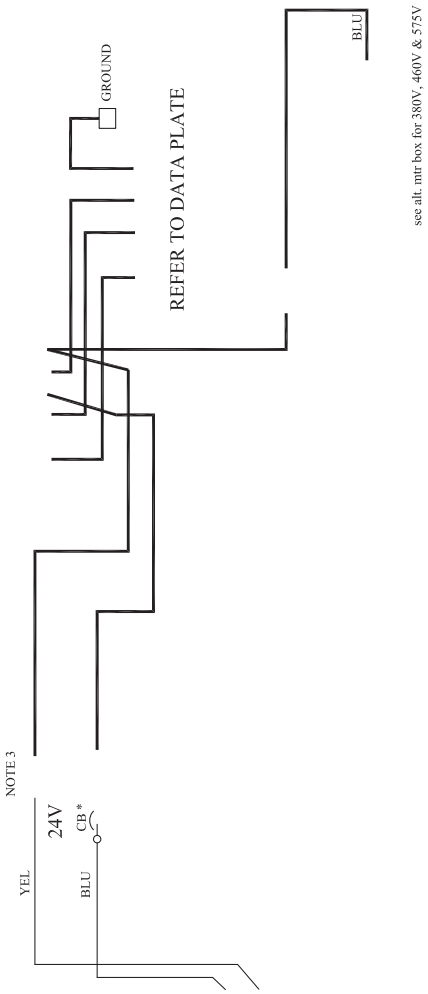

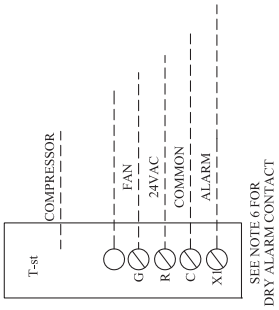

ClimateMaster works continually to improve its products. As a result, the design and specifications of each product at the time of order may be changed without notice and may not be as described herein. Please contact ClimateMaster's Customer Service Department at 1-405-745-6000 for specific information on the current design and specifications. Statements and other information contained herein are not express warranties and do not form the basis of any bargain between the parties, but are merely ClimateMaster's opinion or commendation of its products. The latest version of this document is available at **climatemaster.com**.

Typical Wiring Diagram – Three Phase 460/575V TC Units with DXM Controller

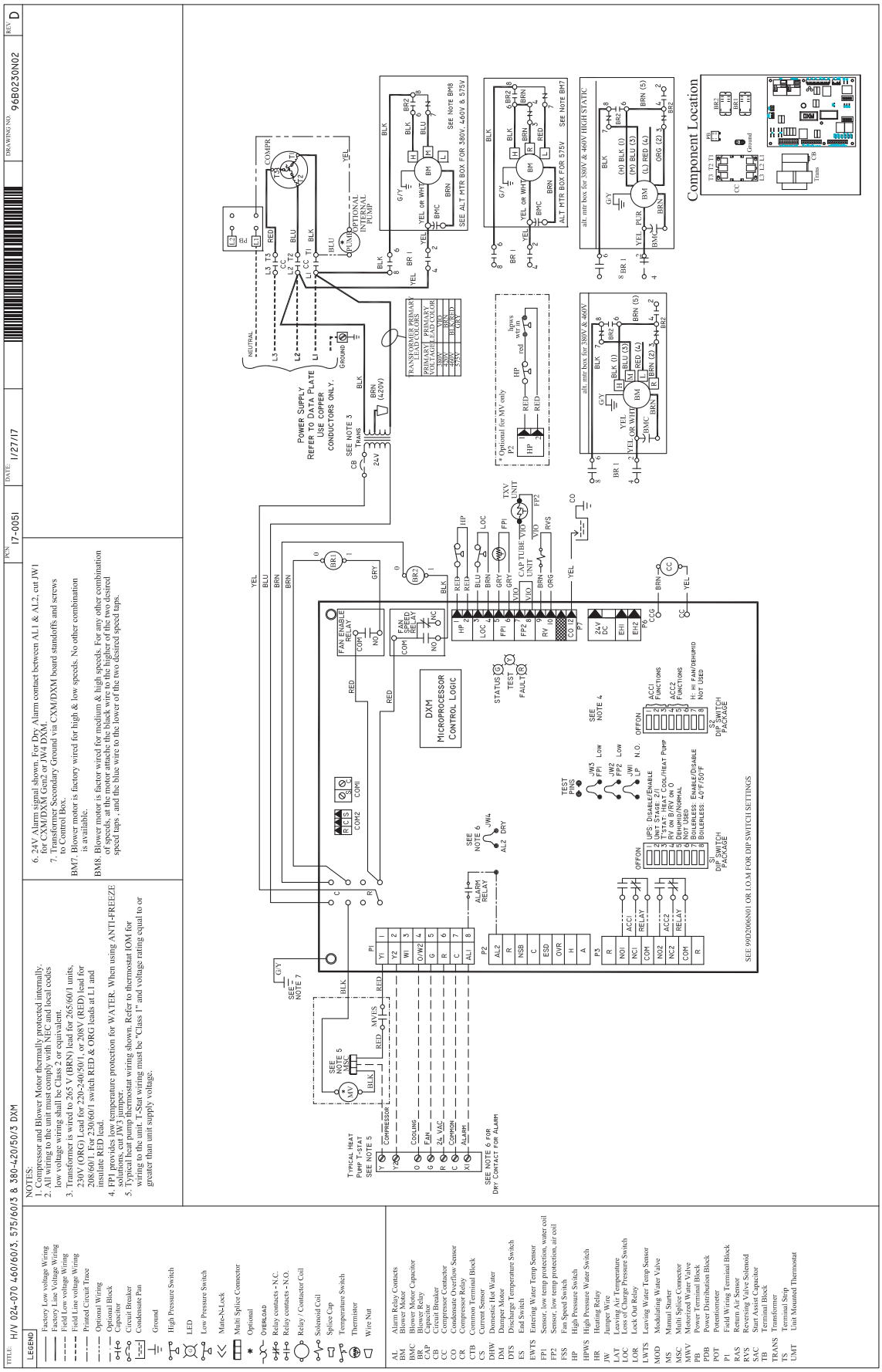

ClimateMaster works continually to improve its products. As a result, the design and specifications of each product at the time of order may be changed without notice and may not be as described herein. Please contact ClimateMaster's Customer Service Department at 1-405-745-6000 for specific information on the current design and specifications. Statements and other information contained herein are not express warranties and do not form the basis of any bargain between the parties, but are merely ClimateMaster's opinion or commendation of its products. The latest version of this document is available at **climatemaster.com**.

Typical Wiring Diagram – Three Phase 460/575V TC Units with CXM And LON Controller

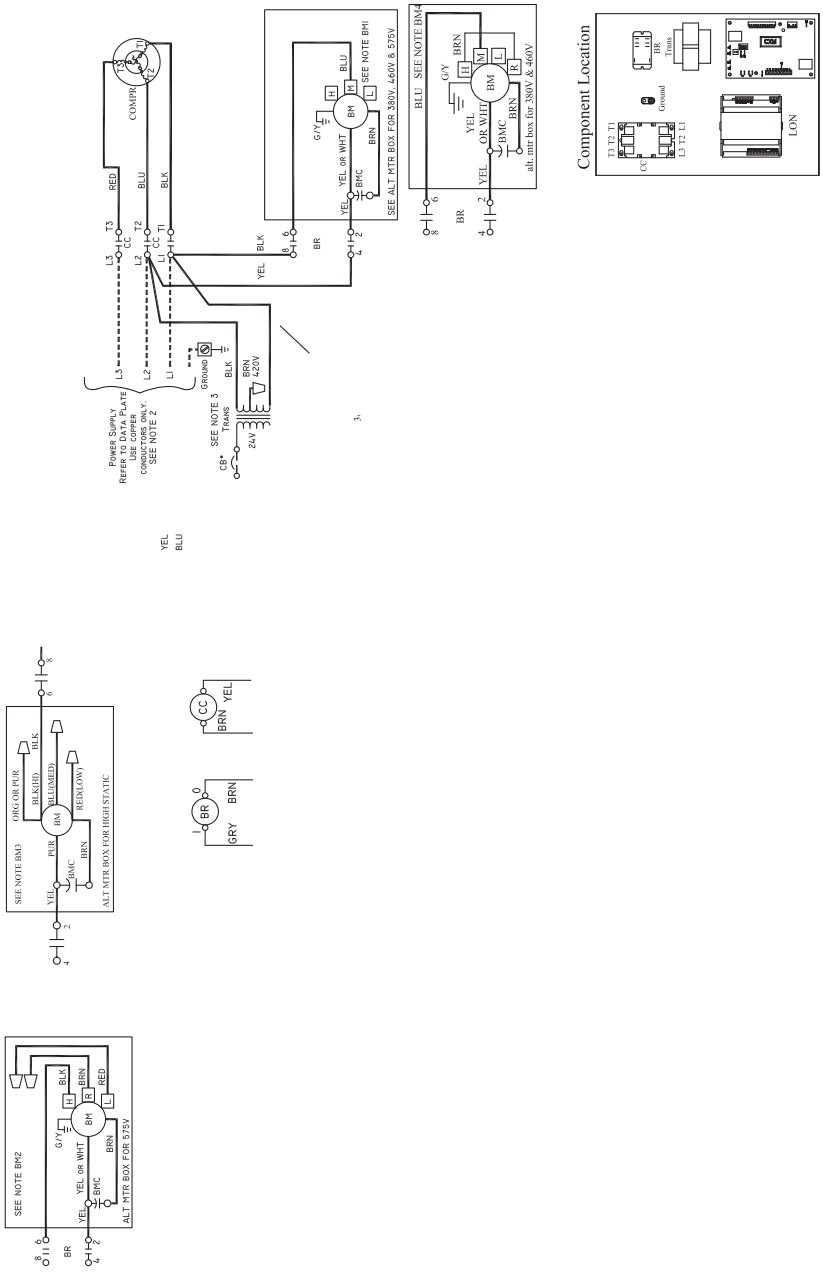

ClimateMaster works continually to improve its products. As a result, the design and specifications of each product at the time of order may be changed without notice and may not be as described herein. Please contact ClimateMaster's Customer Service Department at 1-405-745-6000 for specific information on the current design and specifications. Statements and other information contained herein are not express warranties and do not form the basis of any bargain between the parties, but are merely ClimateMaster's opinion or commendation of its products. The latest version of this document is available at **climatemaster.com**.

Typical Wiring Diagram – Three Phase 460/575V TC Units with DXM & LON Controller

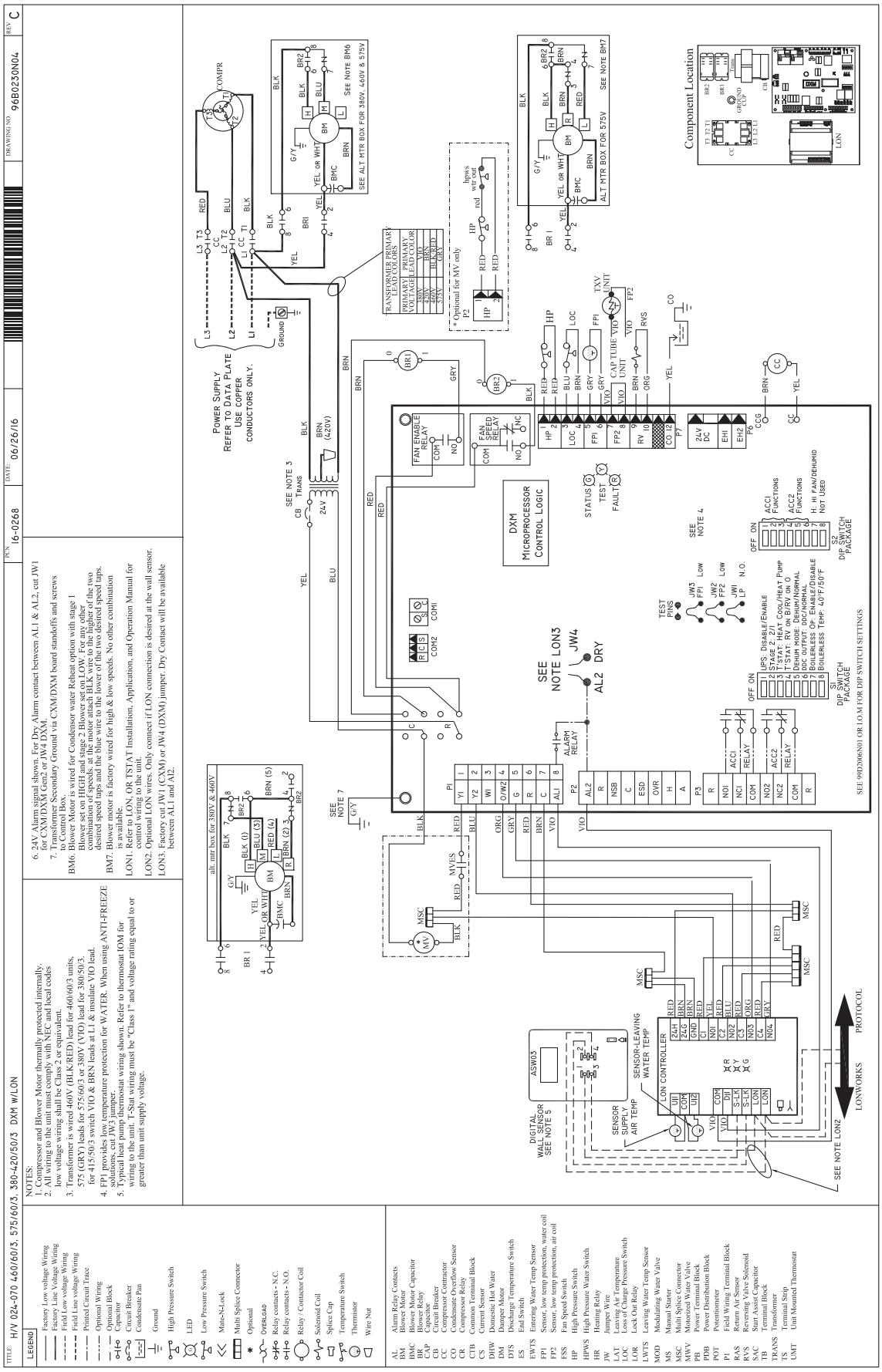

ClimateMaster works continually to improve its products. As a result, the design and specifications of each product at the time of order may be changed without notice and may not be as described herein. Please contact ClimateMaster's Customer Service Department at 1-405-745-6000 for specific information on the current design and specifications. Statements and other information contained herein are not express warranties and do not form the basis of any bargain between the parties, but are merely ClimateMaster's opinion or commendation of its products. The latest version of this document is available at **climatemaster.com**.

Typical Wiring Diagram – Three Phase 460/575V TC Units with CXM & MPC Controller

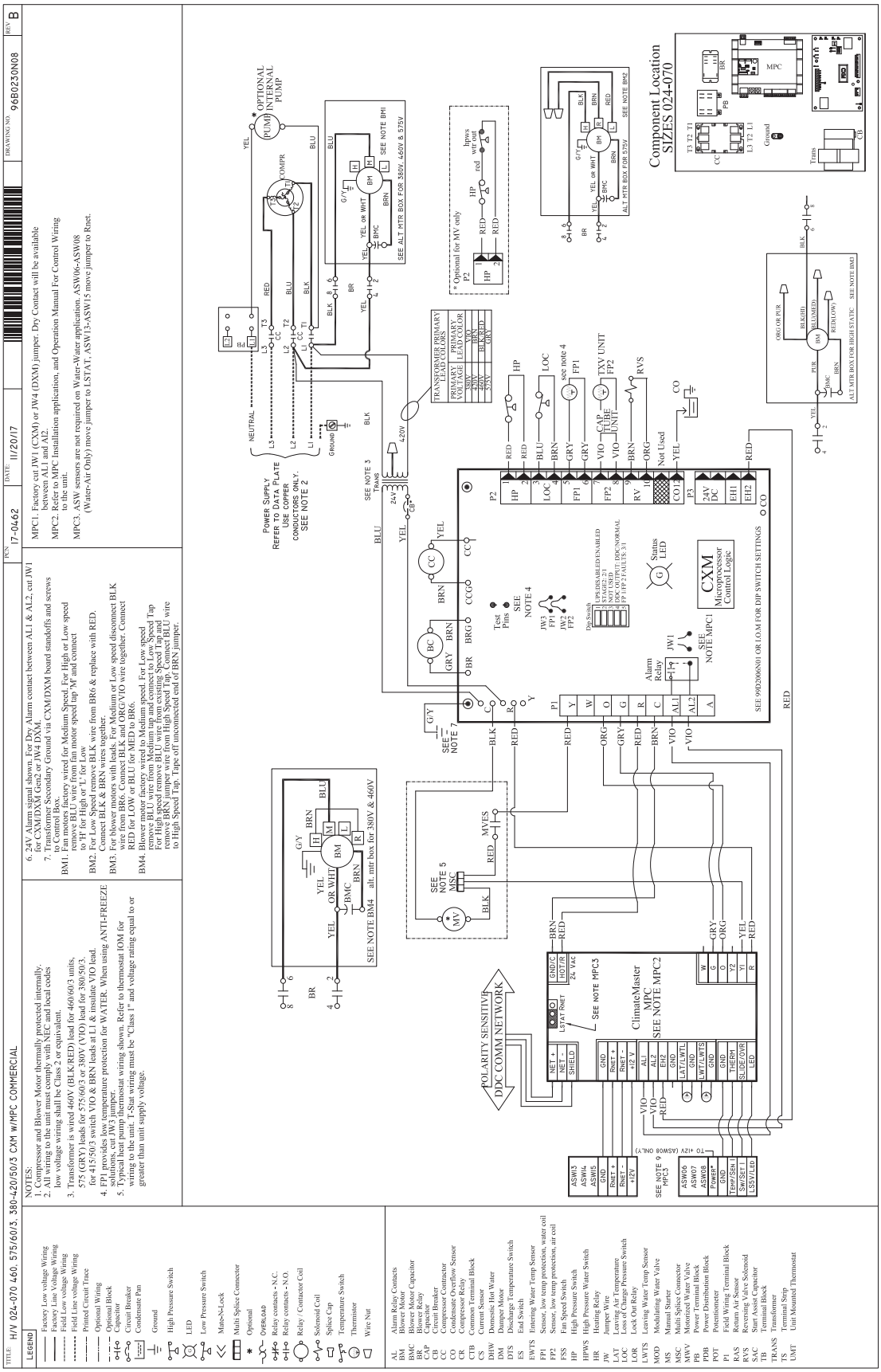

ClimateMaster works continually to improve its products. As a result, the design and specifications of each product at the time of order may be changed without notice and may not be as described herein. Please contact ClimateMaster's Customer Service Department at 1-405-745-6000 for specific information on the current design and specifications. Statements and other information contained herein are not express warranties and do not form the basis of any bargain between the parties, but are merely ClimateMaster's opinion or commendation of its products. The latest version of this document is available at **climatemaster.com**.

Typical Wiring Diagram – Three Phase 460/575V TC Units with DXM & MPC Controller

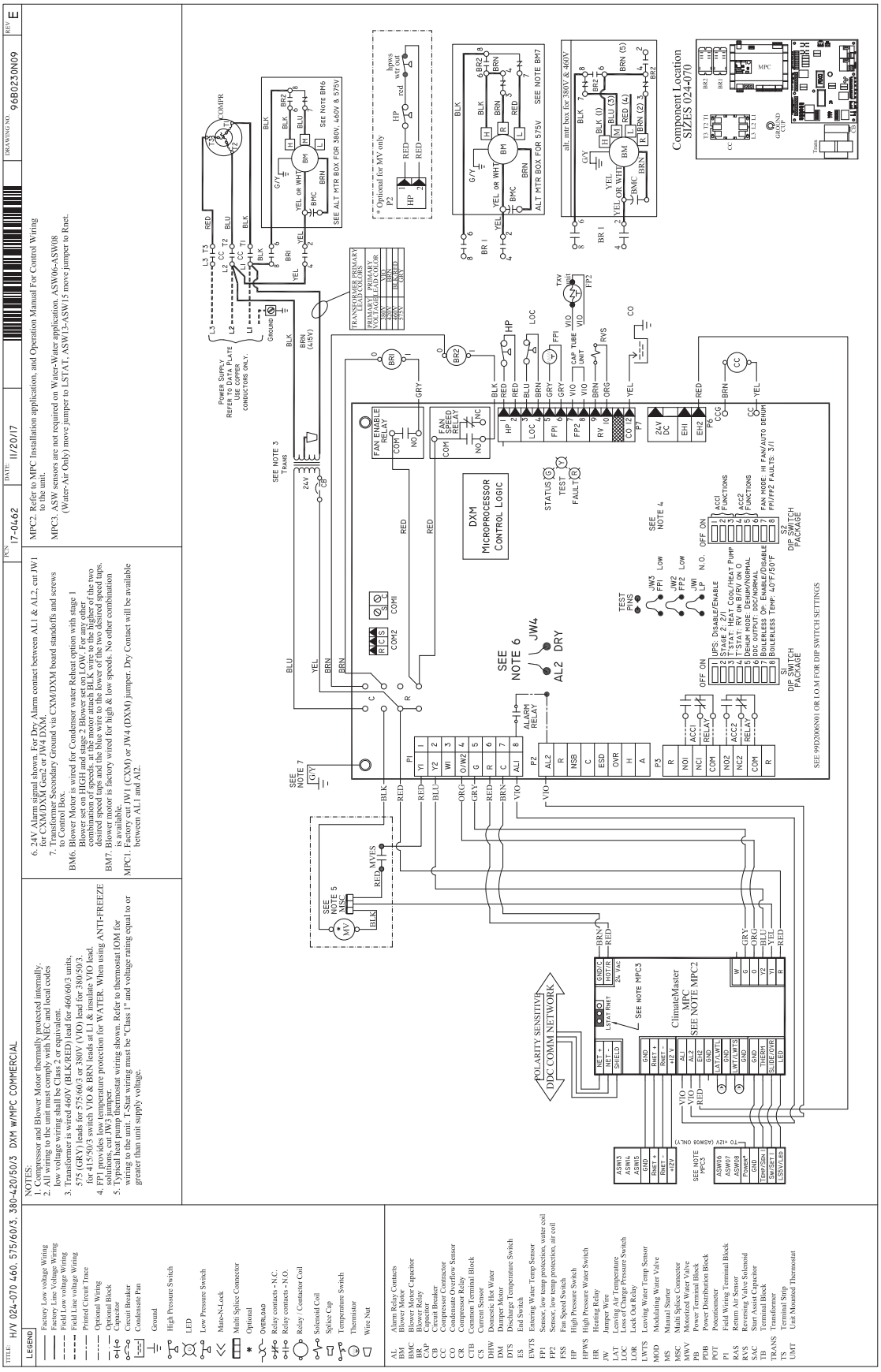

ClimateMaster works continually to improve its products. As a result, the design and specifications of each product at the time of order may be changed without notice and may not be as described herein. Please contact ClimateMaster's Customer Service Department at 1-405-745-6000 for specific information on the current design and specifications. Statements and other information contained herein are not express warranties and do not form the basis of any bargain between the parties, but are merely ClimateMaster's opinion or commendation of its products. The latest version of this document is available at **climatemaster.com**.

General:

Furnish and install ClimateMaster Tranquility® "TC" Water Source Heat Pumps, as indicated on the plans. Equipment shall be completely assembled, piped and internally wired. Capacities and characteristics as listed in the schedule and the specifications that follow.

Units shall be supplied completely factory built capable of operating over an entering water temperature range from 20° to 120°F (-6.7° to 48.9°C) as standard. Equivalent units from other manufacturers may be proposed provided approval to bid is given 10 days prior to bid closing. All equipment listed in this section must be rated and certified in accordance with Air-Conditioning, Heating and Refrigeration Institute/International Standards Organization (AHRI/ISO 13256-1). All equipment must be tested, investigated, and determined to comply with the requirements of the standards for Heating and Cooling Equipment UL-1995 for the United States and CAN/CSA-C22.2 NO.236 for Canada, by Intertek Testing Laboratories (ETL). The units shall have AHRI/ISO and ETL-US-C labels.

All units shall pass a factory acceptance test. The quality control system shall automatically perform the factory acceptance test via computer. A detailed report card from the factory acceptance test shall ship with each unit. **Note: If unit fails the factory acceptance test it shall not be allowed to ship. Unit serial number will be recorded by factory acceptance test and furnished on report card for ease of unit warranty status.**

Basic Construction:

Horizontal units shall have one of the following air flow arrangements: Left Inlet/Straight (Right) Discharge; Right Inlet/Straight (Left) Discharge; Left Inlet/Back Discharge; or Right Inlet/Back Discharge as shown on the plans. Units must have the ability to be field convertible from straight to back or back to straight discharge with no additional parts or unit structure modification. Horizontal units will have factory installed hanger brackets with rubber isolation grommets packaged separately.

Vertical units shall have one of the following airflow arrangements: Left Return/Top Discharge, Right Return/Top Discharge, as shown on the plans.

If units with these arrangements are not used, the contractor is responsible for any extra costs incurred by other trades. All units (horizontal and vertical) must have a minimum of two access panels for serviceability of compressor compartment. **Units having only one access panel to compressor/heat exchangers/expansion device/refrigerant piping shall not be acceptable.**

All interior surfaces shall be lined with 1/2 inch (12.7mm) thick, 1-1/2 lb/ft3 (24 kg/m3) acoustic type glass fiber insulation. Insulation placement shall be designed in a manner that will eliminate any exposed edges to prevent the introduction of glass fibers into the air stream.

The heat pumps shall be fabricated from heavy gauge galvanized steel.

Standard cabinet panel insulation must meet NFPA 90A requirements, air erosion and mold growth limits of UL-181, stringent fungal resistance test per ASTM-C1071 and ASTM G21, and shall meet zero level bacteria growth per ASTM G22. **Unit insulation must meet these stringent requirements or unit(s) will not be accepted.**

All horizontal units to have factory installed 1" (25.4mm) discharge air duct collars, 1" (25.4mm) filter rails with 1" (25.4mm) filters factory installed, and factory installed unit-mounting brackets. Vertical units to have field installed discharge air duct collar, shipped loose and 1" (25.4mm) filter rails with 1" (25.4mm) filters factory installed. **If units with these factory installed provisions are not used, the contractor is responsible for any extra costs to field install these provisions, and/or the extra costs for his sub-contractor to install these provisions.**

All units must have an insulated panel separating the fan compartment from the compressor compartment. Units with the compressor

ClimateMaster works continually to improve its products. As a result, the design and specifications of each product at the time of order may be changed without notice and may not be as described herein. Please contact ClimateMaster's Customer Service Department at 1-405-745-6000 for specific information on the current design and specifications. Statements and other information contained herein are not express warranties and do not form the basis of any bargain between the parties, but are merely ClimateMaster's opinion or commendation of its products. The latest version of this document is available at **climatemaster.com**.

in the air stream are not acceptable. Units shall have factory installed 1 inch (25.4mm) wide filter rails for filter removal from either side. Units shall have a 1 inch (25.4mm) thick throwaway type glass fiber filter. The contractor shall purchase one spare set of filters and replace factory shipped filters on completion of start-up. Filters shall be standard sizes. If units utilize non-standard filter sizes then the contractor shall provide 12 spare filters for each unit.

Cabinets shall have separate holes and knockouts for entrance of line voltage and low voltage control wiring. All factory-installed wiring passing through factory knockouts and openings shall be protected from sheet metal edges at openings by plastic ferrules. Supply and return water connections shall be copper FPT fittings. All water connections and electrical knockouts must be in the compressor compartment corner post as to not interfere with the serviceability of unit. Contractor shall be responsible for any extra costs involved in the installation of units that do not have this feature. Contractor must ensure that units can be easily removed for servicing and coordinate locations of electrical conduit and lights with the electrical contractor.

Option: Contractor shall install 2-inch (50.8mm) filter frame with removable access door and 2 inch (50.8mm) Glass Fiber throwaway filters on all units.

Option: UltraQuiet package shall consist of discharge muffler (except rotary compressors), and sound attenuating material applied to the fan housing.

Option: The unit shall be supplied with extended range insulation option, which adds closed cell insulation to internal water lines, and provides insulation on suction side refrigeration tubing including refrigerant to water heat exchanger.

Option: The unit shall be supplied with Waterside Economizer (WSE). The WSE will consist of hydronic coil, 3 way valve, and aquastat. Aquastat will be adjustable type and factory set at 45° F (72° C). Units with WSE will require heat pump thermostat with 2 stages of cooling.

Fan and Motor Assembly:

Blower shall have inlet rings to allow removal of wheel and motor from one side without removing housing. Units shall have a direct-drive centrifugal fan. The fan motor shall be 3-speed (2-speed for 575V), permanently lubricated, PSC type, with internal thermal overload protection. Units supplied without permanently lubricated motors must provide external oilers for easy service. The fan motor on small and medium size units (006-042) shall be isolated from the fan housing by a torsionally flexible motor mounting system with rubber type grommets to inhibit vibration induced high noise levels associated with “hard wire belly band” motor mounting. The fan motor on larger units (048 & 060) shall be isolated with flexible rubber type isolation grommets only. The fan and motor assembly must be capable of overcoming the external static pressures as shown on the schedule. Airflow/Static pressure rating of the unit shall be based on a wet coil and a clean filter in place.

Option: High static motors (Sizes 015-060)

Option: ECM motors (sizes 015 to 060 except 041): ECM variable speed ball bearing type motor. The ECM fan motor shall provide a soft low noise fan start by ramping fan up to full selected speed over a 30 second period, and slowly ramp down fan at the end of each blower cycle, maintain constant CFM, maximize motor efficiency over its static operating range, and provide airflow adjustment in multiple CFM increments via a separate microprocessor board. The fan motor shall be isolated from the housing by rubber grommets. The motor shall be permanently lubricated and have thermal overload protection. A special dehumidification mode shall be provided to allow lower airflows in cooling for better dehumidification. The dehumidification mode may be constant or automatic (humidistat controlled). ECM motors without controlled ramp up and ramp down features, with constant CFM speed taps, or with no microprocessor controller are not acceptable.

ClimateMaster works continually to improve its products. As a result, the design and specifications of each product at the time of order may be changed without notice and may not be as described herein. Please contact ClimateMaster's Customer Service Department at 1-405-745-6000 for specific information on the current design and specifications. Statements and other information contained herein are not express warranties and do not form the basis of any bargain between the parties, but are merely ClimateMaster's opinion or commendation of its products. The latest version of this document is available at **climatemaster.com**.

Refrigerant Circuit:

All units shall contain an EarthPure® (HFC-410A) sealed refrigerant circuit including a high efficiency scroll or rotary compressor designed for heat pump operation, a thermostatic expansion valve for refrigerant metering, an enhanced corrugated aluminum lanced fin and rifled copper tube refrigerant to air heat exchanger, reversing valve, coaxial (tube in tube) refrigerant to water heat exchanger, and safety controls including a high pressure switch, low pressure (loss of charge) switch, water coil low temperature sensor, and air coil low temperature sensor. Access fittings shall be factory installed on high and low pressure refrigerant lines to facilitate field service. Activation of any safety device shall prevent compressor operation via a microprocessor lockout circuit. The lockout circuit shall be reset at the thermostat or at the contractor supplied disconnect switch. Units that cannot be reset at the thermostat shall not be acceptable.

The compressor shall have a dual level vibration isolation system. The compressor will be mounted on specially engineered sound-tested EPDM vibration isolation grommets or springs to a large heavy gauge compressor mounting plate, which is then isolated from the cabinet base with rubber grommets for maximized vibration attenuation. Compressor shall have thermal overload protection. Compressor shall be located in an insulated compartment away from air stream to minimize sound transmission.

Refrigerant to air heat exchangers shall utilize enhanced corrugated lanced aluminum fins and rifled copper tube construction rated to withstand 625 PSIG (4309 kPa) refrigerant working pressure. Refrigerant to water heat exchangers shall be of copper inner water tube and steel refrigerant outer tube design, rated to withstand 625 PSIG (4309 kPa) working refrigerant pressure and 500 PSIG (3445 kPa) working water pressure. The refrigerant to water heat exchanger shall be “electro-coated” with a low cure cathodic epoxy material a minimum of 0.4 mils thick (0.4 – 1.5 mils range) on all surfaces. The black colored coating shall provide a minimum of 1000 hours salt spray protection per ASTM B117-97 on all external steel and copper tubing. The material shall be formulated without the inclusion of any heavy metals and shall exhibit a pencil hardness of 2H (ASTM D3363-92A), crosshatch adhesion of 4B-5B (ASTM D3359-95), and impact resistance of 160 in-lbs (184 kg-cm) direct (ASTM D2794-93).

Refrigerant metering shall be accomplished by thermostatic expansion valve only. Expansion valves shall be dual port balanced type with external equalizer for optimum refrigerant metering. Units shall be designed and tested for operating ranges of entering water temperatures from 20° to 120°F (-6.7° to 48.9°C). Reversing valve shall be four-way solenoid activated refrigerant valve, which shall default to heating mode should the solenoid fail to function. If the reversing valve solenoid defaults to cooling mode, an additional low temperature thermostat must be provided to prevent over-cooling an already cold room.

Option: The unit will be supplied with cupro-nickel coaxial water to refrigerant heat exchanger.

Drain Pan:

The drain pan shall be constructed of galvanized steel and have a powder coat paint application to further inhibit corrosion. This corrosion protection system shall meet the stringent 1000 hour salt spray test per ASTM B117. If plastic type material is used, it must be HDPE (High Density Polyethylene) to avoid thermal cycling shock stress failure over the lifetime of the unit. Drain pan shall be fully insulated. Drain outlet shall be located at pan as to allow unobstructed drainage of condensate. Drain outlet for horizontal units shall be connected from pan directly to FPT fitting. **No hidden internal tubing extensions from pan outlet extending to unit casing (that can create drainage problems) will be accepted.** The unit as standard will be supplied with solid-state electronic condensate overflow protection. **Mechanical float switches will NOT be accepted.**

Vertical units shall be furnished with a PVC FPT condensate drain connection and an internal factory installed condensate trap. **If units without an internal trap are used, the contractor is responsible for any extra costs to field install these provisions, and/or the extra costs for his sub-contractor to install these provisions.**

ClimateMaster works continually to improve its products. As a result, the design and specifications of each product at the time of order may be changed without notice and may not be as described herein. Please contact ClimateMaster's Customer Service Department at 1-405-745-6000 for specific information on the current design and specifications. Statements and other information contained herein are not express warranties and do not form the basis of any bargain between the parties, but are merely ClimateMaster's opinion or commendation of its products. The latest version of this document is available at **climatemaster.com**.

Option: The unit shall be supplied with stainless steel drain pan.

Electrical:

A control box shall be located within the unit compressor compartment and shall contain a 50VA transformer, 24 volt activated, 2 or 3 pole compressor contactor, terminal block for thermostat wiring and solid-state controller for complete unit operation. Reversing valve and fan motor wiring shall be routed through this electronic controller. Units shall be name-plated for use with time delay fuses or HACR circuit breakers. Unit controls shall be 24 Volt and provide heating or cooling as required by the remote thermostat/sensor.

Solid State Control System (CXM):

Units shall have a solid-state control system. **Units utilizing electro-mechanical control shall not be acceptable.** The control system microprocessor board shall be specifically designed to protect against building electrical system noise contamination, EMI, and RFI interference. The control system shall interface with a heat pump type thermostat. The control system shall have the following features:

a Anti-short cycle time delay on compressor operation.
b. Random start on power up mode.
c. Low voltage protection.
d. High voltage protection.
e. Unit shutdown on high or low refrigerant pressures.
f. Unit shutdown on low water temperature.
g. Condensate overflow electronic protection.
h. Option to reset unit at thermostat or disconnect.
i. Automatic intelligent reset. Unit shall automatically reset the unit 5 minutes after trip if the fault has cleared. If a fault occurs 3 times sequentially without thermostat meeting temperature, then lockout requiring manual reset will occur.
j. Ability to defeat time delays for servicing.
k. Light emitting diode (LED) on circuit board to indicate high pressure, low pressure, low voltage, high voltage, low water/air temperature cut-out, condensate overflow, and control voltage status.
l. The low-pressure switch shall not be monitored for the first 120 seconds after a compressor start command to prevent nuisance safety trips.
m. 24V output to cycle a motorized water valve or other device with compressor contactor.
n. Unit Performance Sentinel (UPS). The UPS warns when the heat pump is running inefficiently.
o. Water coil low temperature sensing (selectable for water or anti-freeze).
p. Air coil low temperature sensing.

NOTE: Units not providing the 8 safety protections of anti-short cycle, low voltage, high voltage, high refrigerant pressure, low pressure (loss of charge), air coil low temperature cut-out, water coil low temperature cut-out, and condensate overflow protections will not be accepted.

Option: Enhanced solid state control system (DXM):

This control system features two stage control of cooling and two stage control of heating modes for exacting temperature and dehumidification purposes.

This control system coupled with a multi-stage thermostat will better dehumidify room air by automatically running the heat pump's fan at lower speed on the first stage of cooling thereby implementing low sensible heat ratio cooling. On the need for higher cooling performance the system will activate the second stage of cooling and automatically switch the fan to the higher fan speed setting. This system may be further enhanced with a humidistat. Units not having automatic low sensible heat ratio cooling will not be accepted; as an alternate a hot gas reheat coil may be provided with control system for automatic activation.

Control shall have all of the above mentioned features of the CXM control system along with the following expanded features:

a. Removable thermostat connector.
b. Night setback control.
c. Random start on return from night setback.

ClimateMaster works continually to improve its products. As a result, the design and specifications of each product at the time of order may be changed without notice and may not be as described herein. Please contact ClimateMaster's Customer Service Department at 1-405-745-6000 for specific information on the current design and specifications. Statements and other information contained herein are not express warranties and do not form the basis of any bargain between the parties, but are merely ClimateMaster's opinion or commendation of its products. The latest version of this document is available at **climatemaster.com**.

d. Minimized reversing valve operation (Unit control logic shall only switch the reversing valve when cooling is demanded for the first time. The reversing valve shall be held in this position until the first call for heating, ensuring quiet operation and increased valve life.).
e. Override temperature control with 2-hour timer for room occupant to override setback temperature at the thermostat.
f. Dry contact night setback output for digital night setback thermostats.
g. Ability to work with heat pump or heat/cool (Y, W) type thermostats.
h. Ability to work with heat pump thermostats using O or B reversing valve control.
i. Emergency shutdown contacts.
j. Boilerless system heat control at low loop water temperature.
k. Ability to allow up to 3 units to be controlled by one thermostat.
l. Relay to operate an external damper.
m. Ability to automatically change fan speed from multistage thermostat.
n. Relay to start system pump.
o. 75 VA control transformer. Control transformer shall have load side short circuit and overload protection via a built in circuit breaker.

Digital Night Setback with Pump Restart (DXM w/ ATP32U03/04)

The unit will be provided with a Digital Night Setback feature using an accessory relay on the DXM controller with an ATP32U03/04 thermostat and an external, field-provided time clock. The external time clock will initiate and terminate the night setback period. The thermostat will have a night setback override feature with a programmable override time period.

An additional accessory relay on the unit DXM controller will energize the building loop pump control for the duration of the override period. **(Note: this feature requires additional low voltage wiring. Consult Application Drawings for details.)**

Remote Service Sentinel (CXM/DXM)

Solid state control system shall communicate with thermostat to display (at the thermostat) the unit status, fault status, and specific fault condition, as well as retrieve previously stored fault that caused unit shutdown. The Remote Service Sentinel allows building maintenance personnel or service personnel to diagnose unit from the wall thermostat. The control board shall provide a signal to the thermostat fault light, indicating a lockout. Upon cycling the G (fan) input 3 times within a 60 second time period, the fault light shall display the specific code as indicated by a sequence of flashes. A detailed flashing code shall be provided at the thermostat LED to display unit status and specific fault status such as over/under voltage fault, high pressure fault, low pressure fault, low water temperature fault, condensate overflow fault, etc. **Units that do not provide this remote service sentinel shall not be acceptable.**

Option: Lonworks interface system

Units shall have all the features listed above (either CXM or DXM) and the control board will be supplied with a LONWORKS interface board, which is LONMark certified. This will permit all units to be daisy chained via a 2-wire twisted pair shielded cable. The following points must be available at a central or remote computer location:

a. Space temperature
b. Leaving water temperature
c. Discharge air temperature
d. Command of space temperature setpoint
e. Cooling status
f. Heating status
g. Low temperature sensor alarm
h. Low pressure sensor alarm
i. High pressure switch alarm
j. Condensate sensor alarm
k. Hi/low voltage alarm
l. Fan “ON/AUTO” position of space thermostat as specified above
m. Unoccupied/occupied command
n. Cooling command
o. Heating command
p. Fan “ON/AUTO” command
q. Fault reset command
r. Itemized fault code revealing reason for specific shutdown fault (any one of 7)

ClimateMaster works continually to improve its products. As a result, the design and specifications of each product at the time of order may be changed without notice and may not be as described herein. Please contact ClimateMaster's Customer Service Department at 1-405-745-6000 for specific information on the current design and specifications. Statements and other information contained herein are not express warranties and do not form the basis of any bargain between the parties, but are merely ClimateMaster's opinion or commendation of its products. The latest version of this document is available at **climatemaster.com**.

This option also provides the upgraded 75VA control transformer with load side short circuit and overload protection via a built in circuit breaker.

Option: MPC (Multiple Protocol Control) interface system

Units shall have all the features listed above (either CXM or DXM) and the control board will be supplied with a Multiple Protocol interface board. Available protocols are BACnet MS/TP, Modbus, or Johnson Controls N2. The choice of protocol shall be field selectable/changeable via the use of a simple selector switch. **Protocol selection shall not require any additional programming or special external hardware or software tools.** This will permit all units to be daisy chain connected by a 2-wire twisted pair shielded cable. The following points must be available at a central or remote computer location:

a. Space temperature
b. Leaving water temperature
c. Discharge air temperature
d. Command of space temperature setpoint
e. Cooling status
f. Heating status
g. Low temperature sensor alarm
h. Low pressure sensor alarm
i. High pressure switch alarm
j. Condensate overflow alarm
k. Hi/low voltage alarm
l. Fan "ON/AUTO" position of space thermostat as specified above
m. Unoccupied/occupied command
n. Cooling command
o. Heating command
p. Fan "ON/AUTO" command
q. Fault reset command
r. Itemized fault code revealing reason for specific shutdown fault (any one of 7)

This option also provides the upgraded 75VA control transformer with load side short circuit and overload protection via a built in circuit breaker.

Warranty:

ClimateMaster shall warranty equipment for a period of 12 months from start up or 18 months from shipping (which ever occurs first).

Option: Extended 4-year compressor warranty covers compressor for a total of 5 years.

Option: Extended 4-year refrigeration circuit warranty covers coils, reversing valve, expansion valve and compressor for a total of 5 years.

Option: Extended 4-year control board warranty covers the CXM/DXM control board for a total of 5 years.

FIELD INSTALLED OPTIONS

Hose Kits:

All units shall be connected with hoses. The hoses shall be 2 feet (61cm) long, braided stainless steel; fire rated hoses complete with adapters. Only fire rated hoses will be accepted.

Valves:

The following valves are available and will be shipped loose:

a. Ball valve; bronze material, standard port full flow design, FPT connections.
b. Ball valve with memory stop and PT port.

ClimateMaster works continually to improve its products. As a result, the design and specifications of each product at the time of order may be changed without notice and may not be as described herein. Please contact ClimateMaster's Customer Service Department at 1-405-745-6000 for specific information on the current design and specifications. Statements and other information contained herein are not express warranties and do not form the basis of any bargain between the parties, but are merely ClimateMaster's opinion or commendation of its products. The latest version of this document is available at **climatemaster.com**.

c. "Y" strainer with blowdown valve; bronze material, FPT connections.
d. Motorized water valve; slow acting, 24v, FPT connections.

Hose Kit Assemblies:

The following assemblies ship with the valves already assembled to the hose described:
a. Supply and return hoses having ball valve with PT port.
b. Supply hose having ball valve with PT port; return hose having automatic flow regulator valve with PT ports, and ball valve.
c. Supply hose having "Y" strainer with blowdown valve, and ball valve with PT port; return hose having automatic flow regulator with PT ports, and ball valve.
d. Supply hose having "Y" strainer with blowdown valve, and ball valve with PT port; return hose having ball valve with PT port.

Thermostats:

The thermostat shall be a ClimateMaster mechanical or electronic type thermostat as selected below with the described features:

a. Single Stage Standard Manual Changeover (ATM11C11)
Thermostat shall be a single-stage, horizontal mount, manual changeover with HEAT-OFF-COOL system switch and fan ON-AUTO switch. Thermostat shall have a mechanical temperature setpoint indicator. Thermostat shall only require 4 wires for connection. Mercury bulb thermostats are not acceptable.

b. Single Stage Digital Auto or Manual Changeover (ATA11U01)
Thermostat shall be a single-stage, digital, auto or manual changeover with HEAT-OFF-COOL-AUTO system switch and fan ON-AUTO switch. Thermostat shall have an LCD display with temperature and setpoint(s) in ºF or ºC. The Thermostat shall provide permanent memory of setpoint(s) without batteries. A fault LED shall be provided to display specific fault condition. Thermostat shall provide temperature display offset for custom applications.

c. Single Stage Digital Automatic or Manual Changeover with Two-Speed Fan Control (ATA11C04) – DXM and PSC Fan required
Thermostat shall be a single-stage, digital, auto or manual changeover with HEAT-OFF-COOL-AUTO system switch, fan ON-AUTO switch, and fan LO-HI switch. Thermostat shall have an LCD display with temperature and setpoint(s) in ºF or ºC. A fault LED shall be provided to display specific fault condition. Thermostat shall allow use of an accessory remote temperature sensor (AST009), but may be operated with internal sensor via orientation of a jumper.

d. Multistage Digital Automatic Changeover (ATA22U01)
Thermostat shall be multi-stage (2H/2C), manual or automatic changeover with HEAT-OFF-COOL-AUTO-EM HEAT system settings and fan ON-AUTO settings. Thermostat shall have an LCD display with temperature, setpoint(s), mode, and status indication. The temperature indication shall be selectable for ºF or ºC. The thermostat shall provide permanent memory of setpoint(s) without batteries. A fault LED shall be provided to indicate specific fault condition(s). Thermostat shall provide temperature display offset for custom applications. Thermostat shall allow unit to provide better dehumidification with optional DXM controller by automatically using lower fan speed on stage 1 cooling (higher latent cooling) as main cooling mode, and automatically shifting to high speed fan on stage 2 cooling.

e. Multistage Manual Changeover Programmable 5/2 Day (ATP21U01)
Thermostat shall be 5 day/2 day programmable (with up to 4 setpoints per day), multi-stage (2H/1C), manual changeover with HEAT-OFF-COOL-EM HEAT system settings and fan ON-AUTO settings. Thermostat shall have an LCD display with temperature, setpoint(s), mode, and status indication. The temperature indication shall be selectable for ºF or ºC. The thermostat shall provide permanent memory of setpoint(s) without batteries. Thermostat shall provide convenient override feature to temporarily change setpoint.

f. Multistage Automatic or Manual Changeover Programmable 7 Day (ATP32U03)
Thermostat shall be 7 day programmable (with up to 4 setpoints per day), multi-stage (3H/2C), automatic or manual changeover with HEAT-OFF-COOL-AUTO-EM HEAT system settings and fan ON-AUTO settings. Thermostat shall have a blue backlit dot matrix LCD display with temperature, setpoints, mode, and status indication. The temperature indication shall be selectable for ºF or ºC. Time display shall be selectable for 12 or 24-hour clock. Fault identification shall be provided (when used with ClimateMaster CXM or DXM controls) to simplify troubleshooting by providing specific unit fault at the thermostat with red backlit LCD during unit lockout. The thermostat shall provide permanent memory of setpoints without batteries. Thermostat shall provide heating setpoint range limit, cooling setpoint range limit, temperature display offset, keypad lockout, dead-band range setting, and inter-stage differential settings. Thermostat shall provide progressive recovery to anticipate time required to bring space temperature to the next programmed event. Thermostat shall provide an installer setup for configuring options and for setup of servicing contractor name and contact information. Thermostat shall allow the use of an accessory remote and/or outdoor temperature sensor (AST008). Thermostat navigation shall be

ClimateMaster works continually to improve its products. As a result, the design and specifications of each product at the time of order may be changed without notice and may not be as described herein. Please contact ClimateMaster's Customer Service Department at 1-405-745-6000 for specific information on the current design and specifications. Statements and other information contained herein are not express warranties and do not form the basis of any bargain between the parties, but are merely ClimateMaster's opinion or commendation of its products. The latest version of this document is available at **climatemaster.com**.

accomplished via five buttons (up/down/right/left/select) with menu-driven selections for ease of use and programming.

g. Multistage Automatic or Manual Changeover Programmable 7 Day with Humidity Control (ATP32U04)
Thermostat shall be 7 day programmable (with up to 4 setpoints per day), multi-stage (3H/2C), automatic or manual changeover with HEAT-OFF-COOL-AUTO-EM HEAT system settings and fan ON-AUTO settings. Separate dehumidification and humidification setpoints shall be configurable for discreet outputs to a dehumidification option and/or an external humidifier. Installer configuration mode shall allow thermostat dehumidification mode to operate with ClimaDry® reheat or with ECM fan dehumidification mode via settings changes. Thermostat shall have a blue backlit dot matrix LCD display with temperature, relative humidity, setpoints, mode, and status indication. The temperature indication shall be selectable for ºF or ºC. Time display shall be selectable for 12 or 24 hour clock. Fault identification shall be provided (when used with ClimateMaster CXM or DXM controls) to simplify troubleshooting by providing specific unit fault at the thermostat with red backlit LCD during unit lockout. The thermostat shall provide permanent memory of setpoints without batteries. Thermostat shall provide heating setpoint range limit, cooling setpoin t range limit, temperature display offset, keypad lockout, dead-band range setting, and inter-stage differential settings. Thermostat shall provide progressive recovery to anticipate time required to bring space temperature to the next programmed event. Thermostat shall provide an installer setup for configuring options and for setup of servicing contractor name and contact information. Thermostat shall allow the use of an accessory remote and/or outdoor temperature sensor (AST008). Thermostat navigation shall be accomplished via five buttons (up/down/right/left/select) with menu-driven selections for ease of use and programming.

DDC Sensors:

ClimateMaster wall mounted DDC sensor to monitor room temperature and interfaces with optional interface system described above. Several types as described below:

a. Sensor only with no display (LON and MPC).
b. Sensor with override (LON only).
c. Sensor with setpoint adjustment and override (MPC only).
d. Sensor with setpoint adjustment and override, LCD display, status/fault indication (LON and MPC).

ClimateMaster works continually to improve its products. As a result, the design and specifications of each product at the time of order may be changed without notice and may not be as described herein. Please contact ClimateMaster's Customer Service Department at 1-405-745-6000 for specific information on the current design and specifications. Statements and other information contained herein are not express warranties and do not form the basis of any bargain between the parties, but are merely ClimateMaster's opinion or commendation of its products. The latest version of this document is available at **climatemaster.com**.

SUBMITTAL DATA - S-I UNITS

Unit Designation: _____

Job Name: _____

Architect: _____

Engineer: _____

Contractor: _____

PERFORMANCE DATA

Cooling Capacity: _____ kW

EER: _____

Heating Capacity: _____ kW

COP: _____

Ambient Air Temp: _____ °C

Entering Water Temp (Clg): _____ °C

Entering Air Temp (Clg): _____ °C

Entering Water Temp (Htg): _____ °C

Entering Air Temp (Htg): _____ °C

Airflow: _____ l/s

Fan Speed or Motor/RPM/Turns: _____

Operating Weight: _____ (kg)

ELECTRICAL DATA

Power Supply: _____ Volts

_____ Phase _____ Hz

Minimum Circuit Ampacity: _____

Maximum Overcurrent Protection: _____

SUBMITTAL DATA - I-P UNITS

Unit Designation: _____

Job Name: _____

Architect: _____

Engineer: _____

Contractor: _____

PERFORMANCE DATA

Cooling Capacity: _____ Btuh

EER: _____

Heating Capacity: _____ Btuh

COP: _____

Ambient Air Temp: _____ °F

Entering Water Temp (Clg): _____ °F

Entering Air Temp (Clg): _____ °F

Entering Water Temp (Htg): _____ °F

Entering Air Temp (Htg): _____ °F

Airflow: _____ CFM

Fan Speed or Motor/RPM/Turns: _____

Operating Weight: _____ (lb)

ELECTRICAL DATA

Power Supply: _____ Volts

_____ Phase _____ Hz

Minimum Circuit Ampacity: _____

Maximum Overcurrent Protection: _____

ClimateMaster works continually to improve its products. As a result, the design and specifications of each product at the time of order may be changed without notice and may not be as described herein. Please contact ClimateMaster's Customer Service Department at 1-405-745-6000 for specific information on the current design and specifications. Statements and other information contained herein are not express warranties and do not form the basis of any bargain between the parties, but are merely ClimateMaster's opinion or commendation of its products. The latest version of this document is available at **climatemaster.com**.

Notes

ClimateMaster works continually to improve its products. As a result, the design and specifications of each product at the time of order may be changed without notice and may not be as described herein. Please contact ClimateMaster's Customer Service Department at 1-405-745-6000 for specific information on the current design and specifications. Statements and other information contained herein are not express warranties and do not form the basis of any bargain between the parties, but are merely ClimateMaster's opinion or commendation of its products. The latest version of this document is available at **climatemaster.com**.

Revision History

Date:	Item:	Action:
4/2/18	Unit photos	Changed unit photos from black to steel color
03/8/18	Page 71	Update Text
11/14/17	Page 43	Updated dimensions D, F, O
11/2/17	Page 58	Added WSE DIP setting table
10/6/17	Page 54	Edit size 015 'E' FLA, MCA
1/30/17	Page 48,49,52	Update WSE Notes
11/4/16	Page 7	Updated 018 awhp rating
11/1/16	Update Document Design	Updated
07/1/16	Page 20,22,25,27,29	Updated Nominal Airflow
06/23/16	All	Updated cabinet photo and description
05/16/16	Table Udates	Updated
10/6/16	Pages 14,18,22,25,27,69	Update Airflow, Heat of rejection, ECM option text
9/27/16	Pages 44,45,48	Corrected TCH Left Hand WSE 048-060 Dim Q
9/7/16	Page 53, cover	updated size 041 voltage codes and cabinet photo
4/20/16	All	Msc. text and wiring diagram updates
4/8/16	Page 8	Update performance data tc009 COP
02/25/16	Page 65 & 66	Updated run test and ECM blower description
02/18/16	Pages 39 & 40	Update Text
11/30/15	Various	Adding WSE to TCH and TCV
10/22/15	Page 25	Updated heating data
08/31/15	Page 7	Revision Level Corrected
07/31/15	Engineering Specifications and Unit Features	Updated, ECM Options Text, Edited Compressors Mount Text
04/29/15	Page 41	Updated Notes
03/03/15	Page 16	Updated 018 ECM Performance Data
02/06/15	Page 7	Changed E-Coated to Tin-Plated
02/03/15	All	Updated Rated Airflows ECM
01/21/15	Engineering Specifications	Added ECM Option Text
01/15/15	Pages 39 & 43	Updated Diagram; Added Text
01/05/15	ECM Blower Option	Added

ClimateMaster works continually to improve its products. As a result, the design and specifications of each product at the time of order may be changed without notice and may not be as described herein. Please contact ClimateMaster's Customer Service Department at 1-405-745-6000 for specific information on the current design and specifications. Statements and other information contained herein are not express warranties and do not form the basis of any bargain between the parties, but are merely ClimateMaster's opinion or commendation of its products. The latest version of this document is available at **climatemaster.com**.

Revision History

Date:	Item:	Action:
06/14/17	Page 41	Update drawing
09/30/14	Text Edit - Page 47	Updated
07/15/14	Page 18	Added WPD
06/16/14	Pages 4, 8 & 46	Updated Text & Table
05/29/14	Physical Data Table	Removed Fan Motor (hp)
05/12/14	Physical Data Table	Updated Ref. Charge 024 and Unit Maximum Working Water Pressure
02/11/13	Unit Features	Updated
02/06/13	TCV041 M, N, Q Dimensions page 30	Updated
02/04/13	TCV Right Return Electrical Tables	Updated Blower Orientation Miscellaneous Edits
09/27/12	TCH060 Corner Weights Recommended Minimum Installation Clearances for Vertical Units *	Corrected Added
05/02/12	Size 041	ISO Table Updated
04/30/12	Horizontal Dimensional Data Table	Updated
02/20/12	Engineering Specifications	Updated
01/23/12	Size 041	Added
09/19/11	Size 024	Added “H” and “F” Voltage
08/09/11	Unit Maximum Working Water Pressure	Updated to Reflect New Safeties
08/03/11	Engineering Specifiations	Added Digital Night Setback with Pump Restart (DXM w/ AT-P32U03/04)
06/17/11	Coated Air Coil Option	Changed Description
04/07/11	Engineering Specification NOTICE	Updated
02/11/11	Performance Data Selection Notes	Updated
01/03/11	Format - All Pages	Updated
09/28/10	Engineering Specifications	Updated
09/28/10	Physical Data Table	Updated-Added Coax Volume Data
09/01/10	012 ‘E’ Airflow Correction Table	Added/Corrected
07/26/10	Wiring Diagrams	Updated
07/26/10	Compressor Mounting Information and Graphics Engineering Specifications	Updated to Reflect Spring/Grommet Change
06/11/10	Format - All Pages	Updated
06/11/10	Engineering Specifiations	Updated
04/23/10	Updated (Page 1) of Engineering Specifications	Paragraph edit to update ARI to AHRI
04/22/10	LEED®, Tranquility® 16, EarthPure®	Updated format (® ™ etc)
09/25/09	Performance Data Selection Notes	Example Updated
09/09/09	Engineering Specification - Fan 2 Motor Assembly	Changed ‘dry’ to ‘wet’
09/09/09	Engineering Specification - Thermostat	Changed ATP32U01, 02 to 03, 04
09/03/09	Fan and Motor Assembly Engineering Spec.	Changed ‘dry’ to ‘wet’
09/03/09	Thermostat Engineering Spec.	Removed ATP11N01, Changed ATP32U01, 02 to 03, 04
05/27/09	Stand-Alone and Big Book Submittals	Consolidated
05/06/09	Dimensional Data Tables	Condensate Column Added to Water Connections Table, Rows Consolidated in Cabinet, Knockoutand Discharge Tables
04/14/09	006-012 unit data added	
02/25/09	First Published	

CLIMATEMASTER®
Water-Source Heat Pump Systems

7300 S.W. 44th Street
Oklahoma City, OK 73179
Phone: 405-745-6000
climatemaster.com

ClimateMaster works continually to improve its products. As a result, the design and specifications of each product at the time of order may be changed without notice and may not be as described herein. Please contact ClimateMaster's Customer Service Department at 1-405-745-6000 for specific information on the current design and specifications. Statements and other information contained herein are not express warranties and do not form the basis of any bargain between the parties, but are merely ClimateMaster's opinion or commendation of its products. The latest version of this document is available at **climatemaster.com**.