INSTALLATION AND MAINTENANCE INSTRUCTIONS

MCE4 Series

Electric Cooling Package Unit

Save these instructions for future reference

This is a safety alert symbol and should never be ignored. When you see this symbol on labels or in manuals, be alert to the potential for personal injury or death.

Installation

WARNING

These units are not approved for mobile home applications. Such use could result in property damage, personal injury, or death.

General

These instructions explain the recommended method of installation of the MagicPak All-In-One™ HVAC system model MCE4 electric cooling unit and associated electrical wiring.

This unit is designed and approved for use as a self-contained air-to-air air conditioning system with optional CLIMATE GUARD™ coated coils.

These instructions, and any instructions packaged with mating components and/or accessories, should be carefully read prior to beginning installation. Note particularly any **CAUTIONS** or **WARNINGS** in these instructions and all labels on the units.

Table of Contents

Installation 1
Operation 10
Maintenance 10
Accessories 11
Wiring Diagrams 13

WARNING

Improper installation, adjustment, alteration, service, or maintenance can cause injury or property damage. Refer to this manual. For assistance or additional information, consult a qualified installer or service agency.

Manufactured By
Allied Air Enterprises LLC
A Lennox International Inc. Company
215 Metropolitan Drive
West Columbia, SC 29170

(P) 507860-01

CAUTION

The installation of this appliance must conform to the requirements of the National Fire Protection Association; the National Electrical Code, ANSI/NFPA No. 70 (latest edition) in the United States; the Canadian Electrical Code Part 1, CSA 22.1 (latest edition) in Canada; and any state or provincial laws or local ordinances. Local authorities having jurisdiction should be consulted before installation is made. Such applicable regulations or requirements take precedence over the general instructions in this manual.

Check that equipment complies with all applicable building codes, laws, and regulations for its intended use prior to installation.

These instructions are intended as a general guide only, for use by qualified personnel and do not supersede any national or local codes in any way. Compliance with all local, state, provincial, or national codes pertaining to this type of equipment should be determined prior to installation.

Units that comply with the maximum cabinet leakage 2% of rated airflow requirements of ANSI/ASHRAE 193 (complies with IECC 2015) are identified on the rating plate.

⚠ WARNING

Installation and servicing of air conditioning equipment can be hazardous due to internal refrigerant pressure and live electrical components. Only trained and qualified service personnel should install or service this equipment. Installation and service performed by unqualified persons can result in property damage, personal injury, or death.

⚠ WARNING

For your safety, do not store or use gasoline or other flammable vapors and liquids in the vicinity of this or any other appliance. Such actions could result in property damage, personal injury, or death.

⚠ WARNING

The unit must be installed with approved wall sleeve and grille accessories for safe operation. Improper installations could result in property damage, personal injury, or death.

Inspection

Upon receipt of equipment, carefully inspect it for possible shipping damage. If damage is found, it should be noted on the carrier's freight bill. Take special care to examine the unit inside the carton if the carton is damaged. File a claim with the transportation company. **If any damages are discovered and reported to the carrier do not install the unit, as claim may be denied.**

Check the unit rating plate to confirm specifications are as ordered.

Limitations

The unit should be installed in accordance with all national and local safety codes.

Limitations of the unit and appropriate accessories must also be observed.

The outdoor fan is designed to operate against no more than .10" w.c. static pressure.

Minimum and maximum operation conditions must be observed to assure maximum system performance with minimum service required. Refer to Table 1 for the application limitations of the unit.

Outdoor Ambient Air Temperature °F		
Minimum DB	Maximum DB	
Cool	Cool	Heat
65	115	75

Indoor Ambient Air Temperature °F			
Minimum		Maximum	
DB/WB	DB	DB/WB	DB
Cool	Heat	Cool	Heat
62/57	50	90/72	80

DB = Dry Bulb

WB = Wet Bulb

Table 1. Application Limitations

Location

⚠ WARNING

The unit must be installed with approved wall sleeve and grille accessories for safe operation. Improper installations could result in property damage, personal injury, or death.

For information on wall sleeves and grille accessories, see the **Accessories** section.

The design is certified for thru-the-wall or up-to-the wall (inside wall) installation only. The interior portions of the unit may be surrounded by a closet with clearances to combustible material held to 0" at the sides, top, and front of the plenum. All servicing and cleaning of the unit can be performed from the front. If installed in a closet or utility room, provide 25" clearance in front for service if the door to the room is not in line with the front of the unit (see Figure 1). **Accessibility clearances must take precedence over fire protection clearances.**

Accessibility Clearances

The front of the unit must be accessible for service. A minimum clearance of 30” in front of unit is required for service.

If the unit is enclosed, a door or access panel aligned with the front of the unit is the preferred method of providing access. The door or access panel opening must be a minimum of 30” wide (centered on the unit) and be as tall as the unit.

If a return duct is not installed, in order to provide adequate return air, the minimum clearance required between the front of the unit and the door or access panel is 4” for 43” tall cabinets and 5” for 48” and 56” tall cabinets.

> IMPORTANT
>
> The unit must be installed with approved wall sleeve and louver accessories for safe operation. Improper installations could result in property damage, personal injury, or death.

Supply Duct Clearances

Minimum Clearances to Combustible Materials [1]		
Front	**Sides**	**Top**
0”	0”	0”

[1] Accessibility clearances take precedence.

Unit Clearances

Return Duct Configuration	Unit Height	Minimum Clearances [1] Front	Minimum Clearances [1] Sides [3]
Connected to unit’s: - Top Duct Opening, or - Optional Front Return	All	See Note 2	1”
No Return Duct (Open Optional Front Return)	43”	4”	1”
	48” or 56”	5”	1”

[1] Accessibility clearances take precedence.

[2] Clearance must accommodate field-installed condensate drain line / drain trap.

[3] Additional clearance required if field-installed condensate drain line / drain trap is routing alongside unit.

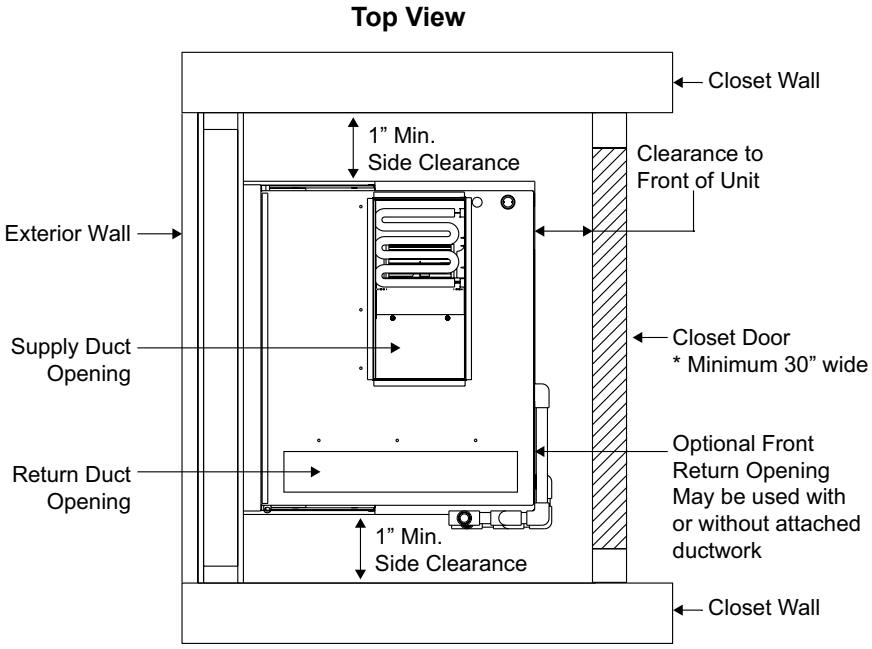

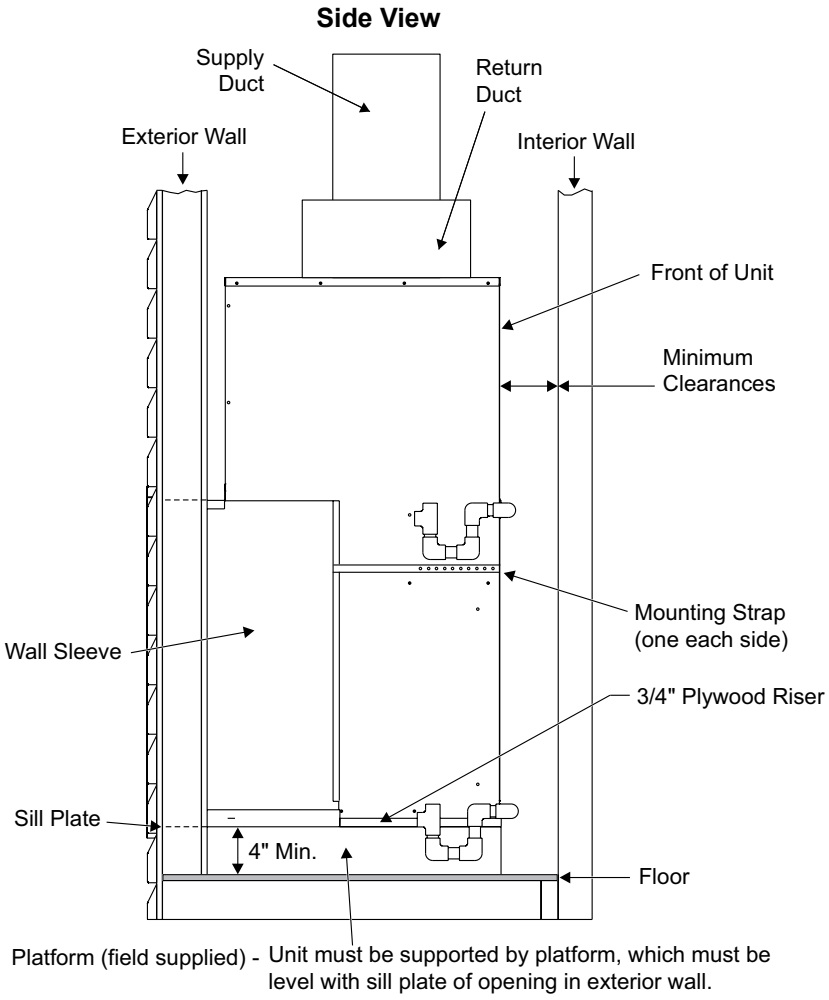

Figure 1. Minimum Clearances

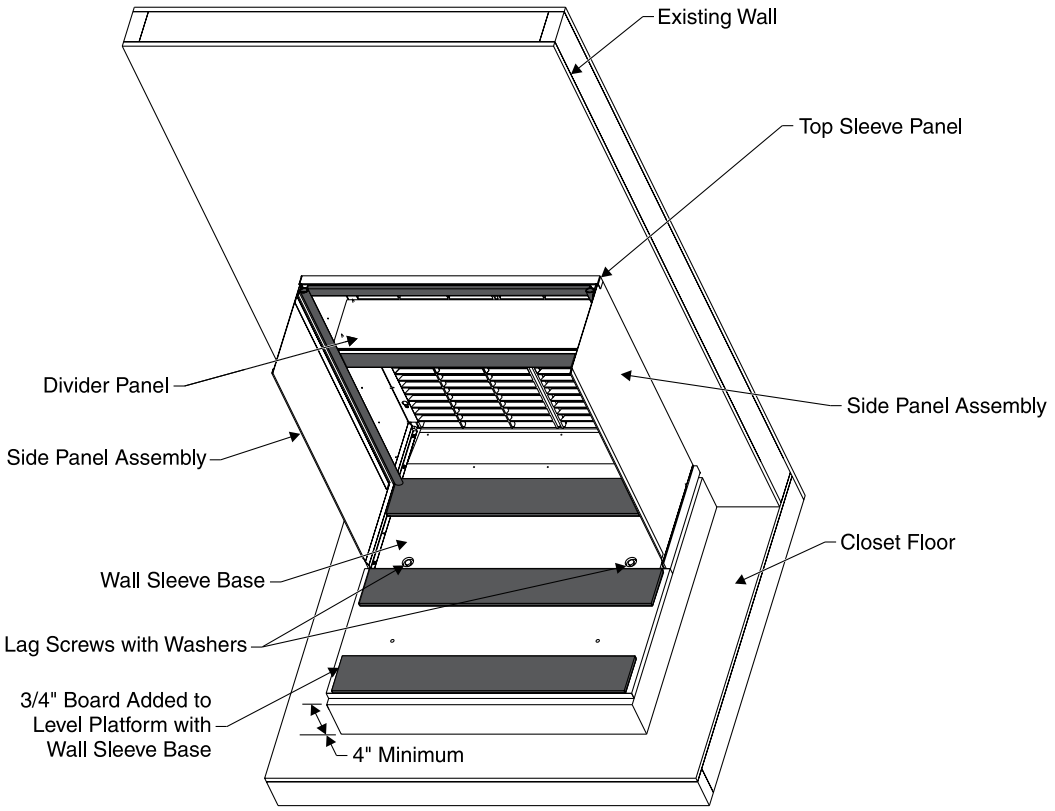

NOTE: Platform must be constructed so that it is level with sill plate of wall opening.

Figure 2. Wall Sleeve and Louver Kit Installed

The outside of the unit may be flush with the face of the exterior wall, and it should not be obstructed with trees, landscape materials, or building structure. Unit can be installed recessed with appropriate wall sleeve accessories. There is no minimum clearance required on locating the unit to an interior corner of a building.

If the unit is installed in a residential garage, it must be located or protected to avoid physical damage by vehicles. The unit must be installed so that no electrical components are exposed to water.

⚠ CAUTION

This unit must be installed level to allow for proper drainage of the unit base pan and indoor drain pan.

Wall Sleeve and Louver Grille Installation

Refer to installation instructions included with the wall sleeve kit and the louver grille kit along with Figure 2 for guidance in assembling and installing the wall sleeve and louver grille.

⚠ CAUTION

The sleeve is not intended as the sole support for the unit. An additional support must be provided for adequate support (see Figure 2).

Installing and Securing Unit to Wall Sleeve

1. Make sure the gaskets attached to the sleeve are not damaged.
2. Verify divider panel is positioned properly. Refer to Table 2 for wall sleeves that allow for multiple divider panel locations.

	ASLEEVE**-2	ASLEEVE**-5	Orientation of Flange
Model	**Two Positions**	**Three Positions**	
MCE4-11-09,12,18	Lower	Lower	Down
MCE4-11-24			Up
MCE4-11-30	Upper	Middle	
MCE4-11-36	N/A	Upper	

Table 2.

3. Place the MCE unit into the wall sleeve. **Lift leading end of unit and walk unit onto the sleeve.** Once in the sleeve, lower the unit into position. This prevents damage to the base pads. Assure that the unit is level and completely seated against the gaskets on the wall sleeve. The unit must be supported by a field-supplied base platform.

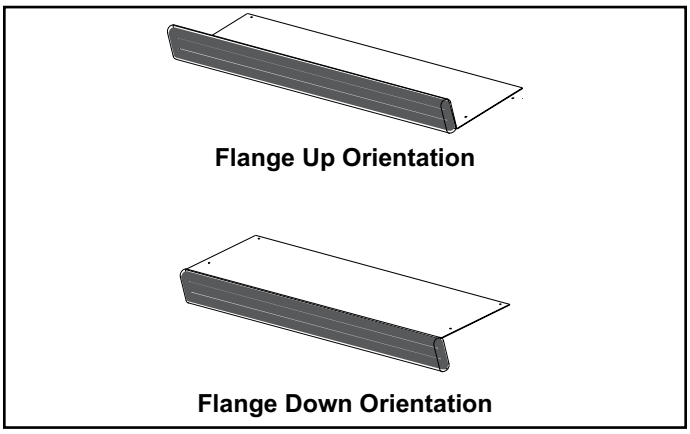

Figure 3. Positioning Divider Panel

4. Use the two installation brackets to secure the unit to the wall sleeve (see Figure 4). The units are shipped with the brackets placed in the return air compartment. Hook each bracket into the front edge of the wall sleeve side. Position the bracket so it can be bent around the front corner of the unit. Remove one of the two screws in that position on the unit. Line up one of the holes in the installation bracket with the screw hole and attach the bracket to the unit with that screw. Make sure to fasten tight enough that the seal is maintained. Trim off excess bracket if applicable.

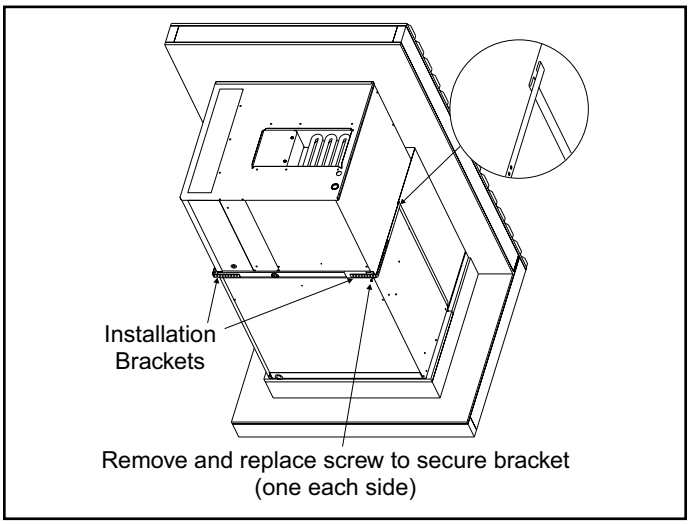

Figure 4. Securing Unit

⚠ CAUTION

Do not screw into the side of the drain pan, or into the indoor coil or heat strip.

5. Inspect the fit up of the unit to the wall sleeve. Verify that the gaskets of the wall sleeve make a complete seal to the unit paying particular attention to top and bottom corners of unit to sleeve seal. Caulk if needed.

Ductwork

Ductwork should be designed and sized according to the methods in Manual Q of the Air Conditioning Contractors of America (ACCA).

Check unit air supply outlet for debris before making ductwork connections.

It is recommended that supply and return duct connections at the unit be made with flexible joints. If flexible ducts are used, a 6” sheet metal starter collar is required.

The supply and return air duct systems should be designed for the CFM and static requirements of the job (see Table 3). **They should not be sized to match the dimensions of the duct connections on the unit.** The return duct should be sealed to the unit casing and terminate outside the space containing the unit.

Optional Front Return

As shipped, units are configured for attaching supply and return ductwork to the top of the unit. Return air may be brought in through the optional front return opening. To open the optional front return and close off the top return opening, perform the following steps.

1. Rotate knob to release filter access panel and remove panel.
   a. For all units except 3-ton models, position filter access panel to close off top return opening. Secure at rear using two sheet metal screws. Secure in front using knob. See Figure 5.
   b. For 3-ton models, field fabricate a sheet metal panel to close off the top return opening.
2. Seal panel to top of unit with tape or mastic.

NOTE: *If ductwork is attached to the optional front return opening, provisions to service unit filter must be provided.*

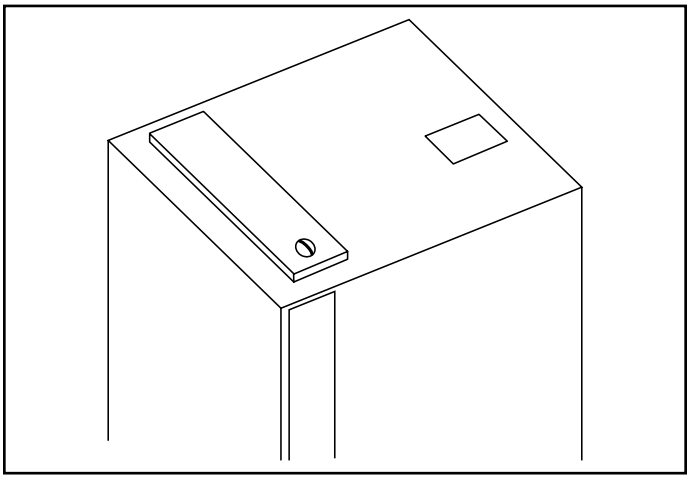

Figure 5. Secure Filter Access Panel

Airflow Performance as a Function of External Static Pressure																	
Model	Indoor Blower Speed		0.1 “w.c.			0.2 “w.c.			0.3 “w.c.			0.4 “w.c.			0.5 “w.c.		
			SCFM	Watts	HP	SCFM	Watts	HP	SCFM	Watts	HP	SCFM	Watts	HP	SCFM	Watts	HP
*MCE4-11-091*P	(FAN)		355	28	0.04	320	31	0.04	275	35	0.05	230	38	0.05	160	42	0.06
	(COOL)†		375	31	0.04	330	33	0.04	285	37	0.05	N/A	N/A	N/A	N/A	N/A	N/A
	(COOL)		N/A	N/A	N/A	N/A	N/A	N/A	390	55	0.07	370	58	0.08	330	62	0.08
	0 kW	TAP 4 (HEAT)*	375	31	0.04	330	33	0.04	285	37	0.05	240	40	0.05	180	44	0.06
		TAP 5 (HEAT)	465	47	0.06	425	51	0.07	390	55	0.07	370	58	0.08	330	62	0.08
	3 kW	TAP 4 (HEAT)*	430	41	0.05	410	45	0.06	385	49	0.07	N/A	N/A	N/A	N/A	N/A	N/A
		TAP 5 (HEAT)	520	58	0.08	500	63	0.08	475	68	0.09	440	73	0.10	400	77	0.10
	5 kW	TAP 4 (HEAT)*	525	59	0.08	505	65	0.09	480	69	0.09	N/A	N/A	N/A	N/A	N/A	N/A
		TAP 5 (HEAT)	615	81	0.11	590	88	0.12	560	94	0.13	530	99	0.13	500	103	0.14
*MCE4-11-121*P	TAP 1 (FAN)		355	28	0.04	320	31	0.04	275	35	0.05	230	38	0.05	160	42	0.06
	TAP 2 (COOL)†		420	40	0.05	380	42	0.06	355	46	0.06	N/A	N/A	N/A	N/A	N/A	N/A
	TAP 3 (COOL)		N/A	N/A	N/A	480	62	0.08	445	66	0.09	415	70	0.09	380	74	0.10
	0 kW	TAP 4 (HEAT)*	420	40	0.05	380	42	0.06	355	46	0.06	315	50	0.07	275	54	0.07
		TAP 5 (HEAT)	515	58	0.08	480	62	0.08	445	66	0.09	415	70	0.09	380	74	0.10
	3 kW	TAP 4 (HEAT)*	430	41	0.05	410	45	0.06	385	49	0.07	N/A	N/A	N/A	N/A	N/A	N/A
		TAP 5 (HEAT)	520	58	0.08	500	63	0.08	475	68	0.09	440	73	0.10	400	77	0.10
	5 kW	TAP 4 (HEAT)*	525	59	0.08	505	65	0.09	480	69	0.09	N/A	N/A	N/A	N/A	N/A	N/A
		TAP 5 (HEAT)	615	81	0.11	590	88	0.12	560	94	0.13	530	99	0.13	500	103	0.14
*MCE4-11-181*P	TAP 1 (FAN)		355	28	0.04	320	31	0.04	275	35	0.05	230	38	0.05	160	42	0.06
	TAP 2 (COOL)†		660	103	0.14	640	109	0.15	610	114	0.15	580	119	0.16	550	124	0.17
	TAP 3 (COOL)		725	131	0.18	710	135	0.18	685	140	0.19	660	146	0.20	640	152	0.20
	0 kW	TAP 4 (HEAT)*	660	103	0.14	640	109	0.15	610	114	0.15	580	119	0.16	550	124	0.17
		TAP 5 (HEAT)	725	131	0.18	710	135	0.18	685	140	0.19	660	146	0.20	640	152	0.20
	3 kW	TAP 4 (HEAT)*	430	41	0.05	410	45	0.06	385	49	0.07	N/A	N/A	N/A	N/A	N/A	N/A
		TAP 5 (HEAT)	520	59	0.08	500	63	0.08	475	67	0.09	440	72	0.10	400	77	0.10
	5 kW	TAP 4 (HEAT)*	525	60	0.08	505	65	0.09	480	70	0.09	N/A	N/A	N/A	N/A	N/A	N/A
		TAP 5 (HEAT)	615	81	0.11	590	88	0.12	560	95	0.13	530	100	0.13	500	103	0.14
	7 kW	TAP 4 (HEAT)*	685	108	0.14	670	116	0.16	645	122	0.16	N/A	N/A	N/A	N/A	N/A	N/A
		TAP 5 (HEAT)	790	153	0.21	770	160	0.21	750	166	0.22	720	172	0.23	700	177	0.24
	10 kW	TAP 4 (HEAT)*	790	153	0.21	770	160	0.21	750	166	0.22	N/A	N/A	N/A	N/A	N/A	N/A
		TAP 5 (HEAT)	890	211	0.28	870	217	0.29	850	222	0.30	820	226	0.30	800	230	0.31

N/A: Do not operate unit using this blower speed at this external static pressure.

† As shipped speed for Cooling operation. Blower speed must be field adjusted to Speed Tap 3 for higher duct static applications.

* As shipped speed for Heating operation. Blower speed must be field adjusted to Speed Tap 5 for higher duct static applications.

Table 3. Blower Performance (208V or 230V)

Airflow Performance as a Function of External Static Pressure																	
Model	Indoor Blower Speed		0.1 “w.c.			0.2 “w.c.			0.3 “w.c.			0.4 “w.c.			0.5 “w.c.		
			SCFM	Watts	HP	SCFM	Watts	HP	SCFM	Watts	HP	SCFM	Watts	HP	SCFM	Watts	HP
*MCE4-11-241*P	TAP 1 (FAN)		455	41	0.05	420	45	0.06	385	49	0.07	365	52	0.07	320	57	0.08
	TAP 2 (COOL)†		810	146	0.20	790	158	0.21	780	166	0.22	755	173	0.23	735	179	0.24
	TAP 3 (COOL)		870	179	0.24	860	184	0.25	845	194	0.26	815	202	0.27	785	206	0.28
	0 kW	TAP 4 (HEAT)*	810	146	0.20	790	158	0.21	780	166	0.22	755	173	0.23	735	179	0.24
		TAP 5 (HEAT)	870	179	0.24	860	184	0.25	845	194	0.26	815	202	0.27	785	206	0.28
	5 kW	TAP 4 (HEAT)*	555	65	0.09	540	69	0.09	510	73	0.10	480	76	0.10	N/A	N/A	N/A
		TAP 5 (HEAT)	645	88	0.12	630	94	0.13	605	100	0.13	580	105	0.14	550	110	0.15
	7 kW	TAP 4 (HEAT)*	775	140	0.19	765	145	0.19	745	150	0.20	725	154	0.21	N/A	N/A	N/A
		TAP 5 (HEAT)	875	184	0.25	865	193	0.26	845	201	0.27	825	208	0.28	800	215	0.29
	10 kW	TAP 4 (HEAT)*	875	184	0.25	865	193	0.26	845	201	0.27	825	208	0.28	N/A	N/A	N/A
		TAP 5 (HEAT)	995	253	0.34	980	260	0.35	980	267	0.36	960	272	0.36	900	276	0.37
*MCE4-11-301*P	TAP 1 (FAN)		590	42	0.06	530	48	0.06	430	55	0.07	380	60	0.08	315	65	0.09
	TAP 2 (COOL)†		1015	152	0.20	985	161	0.22	940	170	0.23	910	177	0.24	875	184	0.25
	TAP 3 (COOL)		1115	192	0.26	1080	201	0.27	1045	210	0.28	1015	219	0.29	980	227	0.30
	0 kW	TAP 4 (HEAT)*	1015	152	0.20	985	161	0.22	940	170	0.23	910	177	0.24	875	184	0.25
		TAP 5 (HEAT)	1115	192	0.26	1080	201	0.27	1045	210	0.28	1015	219	0.29	980	227	0.30
	5 kW	TAP 4 (HEAT)*	740	65	0.09	705	74	0.10	640	83	0.11	N/A	N/A	N/A	N/A	N/A	N/A
		TAP 5 (HEAT)	820	81	0.11	790	91	0.12	740	100	0.13	675	109	0.15	600	117	0.16
	7 kW	TAP 4 (HEAT)*	860	91	0.12	835	100	0.13	795	108	0.14	N/A	N/A	N/A	N/A	N/A	N/A
		TAP 5 (HEAT)	945	112	0.15	925	122	0.16	885	132	0.18	845	140	0.19	800	148	0.20
	10 kW	TAP 4 (HEAT)*	945	112	0.15	925	122	0.16	885	132	0.18	N/A	N/A	N/A	N/A	N/A	N/A
		TAP 5 (HEAT)	1050	141	0.19	1020	151	0.20	980	161	0.22	940	170	0.23	900	179	0.24
*MCE4-11-361*P	TAP 1 (FAN)		680	61	0.08	630	68	0.09	575	74	0.10	525	79	0.11	460	86	0.12
	TAP 2 (COOL)†		1235	260	0.35	1200	272	0.36	1166	284	0.38	1135	295	0.40	1100	305	0.41
	TAP 3 (COOL)		1315	304	0.41	1280	316	0.42	1250	330	0.44	1215	342	0.46	1180	354	0.47
	0 kW	TAP 4 (HEAT)*	1235	260	0.35	1200	272	0.36	1166	284	0.38	1135	295	0.40	1100	305	0.41
		TAP 5 (HEAT)	1315	304	0.41	1280	316	0.42	1250	330	0.44	1215	342	0.46	1180	354	0.47
	5 kW	TAP 4 (HEAT)*	740	75	0.10	695	82	0.11	640	90	0.12	N/A	N/A	N/A	N/A	N/A	N/A
		TAP 5 (HEAT)	815	92	0.12	785	100	0.13	745	108	0.14	700	115	0.15	650	122	0.16
	7 kW	TAP 4 (HEAT)*	815	92	0.12	785	100	0.13	745	108	0.14	N/A	N/A	N/A	N/A	N/A	N/A
		TAP 5 (HEAT)	910	117	0.16	880	126	0.17	840	135	0.18	800	143	0.19	750	150	0.20
	10 kW	TAP 4 (HEAT)*	1010	143	0.19	980	155	0.21	945	166	0.22	N/A	N/A	N/A	N/A	N/A	N/A
		TAP 5 (HEAT)	1085	175	0.23	1065	187	0.25	1030	198	0.27	995	209	0.28	950	219	0.29

N/A: Do not operate unit using this blower speed at this external static pressure.

† As shipped speed for Cooling operation. Blower speed must be field adjusted to Speed Tap 3 for higher duct static applications.

* As shipped speed for Heating operation. Blower speed must be field adjusted to Speed Tap 5 for higher duct static applications.

Table 3. Blower Performance (208V or 230V)

Air Filter

All indoor return air must be filtered. A washable filter is furnished with the unit, located in the return air compartment. If the optional front return opening is used and a duct is installed, provisions must be made to accommodate filter servicing. If a filter is installed at a separate central return location, then the factory furnished filter must be removed from the unit.

The filter should be cleaned at least three times during each of the heating and cooling seasons, or more frequently if unusual conditions are encountered. To clean the washable filter, shake filter to remove excess dirt and/or use a vacuum cleaner. Wash filter in soap or detergent water and replace after filter is dry. It is not necessary to oil the filter after washing.

The washable filter may be replaced with a disposable filter. Table 4 lists filter sizes that fit the unit.

Model Number	Filter Size (in.)
MCE4-11-09 *MCE4-11-12* *MCE4-11-18*	18 x 20 x 1
MCE4-11-24	20 x 22 x 1
MCE4-11-30	22 x 24 x 1
MCE4-11-36	22 x 28 x 1

Table 4. Filter Sizes

If an installation is made in which it is more desirable to mount the filter exterior to the unit, in the return duct work or elsewhere, the washable filter can be used or replaced with a disposable filter. If a disposable filter is used, use the information provided in Table 5 when sizing the disposable filter.

Model Number	Filter Area (in^2)
MCE4-11-09 *MCE4-11-12*	250
0MCE4-11-18* 3MCE4-11-18* 5MCE4-11-18*	310
7MCE4-11-18* 10MCE4-11-18*	380
MCE4-11-24	420
MCE4-11-30	480
MCE4-11-36	575

Table 5. Minimum Required Surface Area for Disposable Filters

Condensate Drain

Provisions must be made to properly drain the indoor and outdoor drain pans of this appliance.

Indoor drain and outdoor drain connection: 3/4” NPT to 3/4” PVC fitting (schedule 40 minimum). Both drains must be trapped as shown in Figure 6. The drain line should pitch gradually downward at least 1” per 10’ of horizontal run to an open drain.

If local codes require the use of metal condensate lines, do not thread metal fittings into the unit drain pans. Thread a PVC fitting into the unit drain pans and make the field connection to the PVC fitting.

NOTE: *MCE units are designed with a redundant drain system to handle condensate without the need for a secondary or emergency drain pan. Should the indoor coil condensate drain system fail, all water is contained within the unit and the flow is directed into the unit base pan. From there it will drain into the condensate riser. If for some reason the water cannot drain into the main condensate riser, all water is contained in the unit, and the design will allow drainage out through the wall sleeve and louver assembly to the outside of the building.*

⚠ CAUTION

Use thread sealant on the threaded fittings. Install threaded fittings by hand only. **Do not over torque the fittings.**

Do not thread metal condensate fittings to unit drain pans.

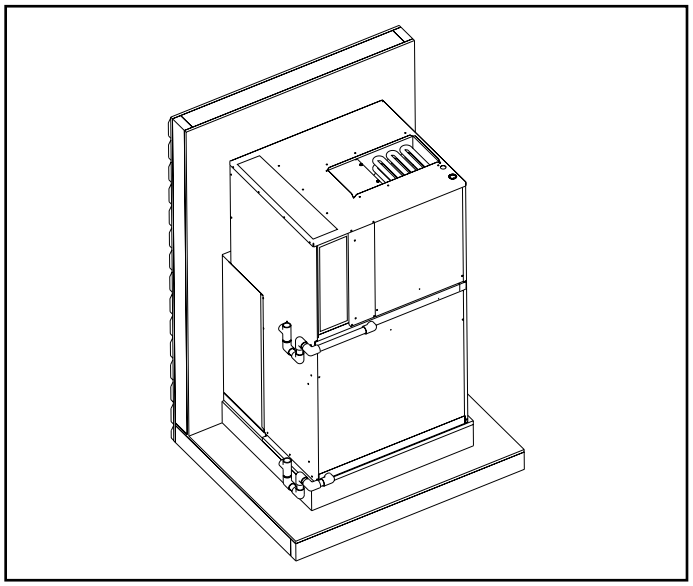

Figure 6. Condensate Drain Installation

Outdoor Ventilation Air

Units are fitted with a panel that seals the return air compartment at the outdoor air duct. Installers can choose to remove the factory-installed panel and use the provided auxiliary panel if introduction of outdoor air is desired.

NOTE: *If outdoor ventilation air is introduced, the quantity of air and conditions of this air must be accounted for in the load calculations for the unit installation.*

The auxiliary panel includes nine knockouts to configure air flow to installation requirements. Use Table 6 and Figure 7 to determine which knockouts to remove from the auxiliary panel in order to achieve the desired air flow. Use a flat head screw driver to remove the knockouts. Set the factory-installed panel aside for possible future changes.

		Outdoor Ventilation Air (CFM)					
		MCE4-11-09	*MCE4-11-12*	*MCE4-11-18*	*MCE4-11-24*	*MCE4-11-30*	*MCE4-11-36*
	Nominal Indoor Airflow	**350**	**400**	**650**	**800**	**1000**	**1200**
Number of Openings	#1 Only	6	7	14	17	19	23
	#1 and #2	10	12	21	23	26	30
	#1 thru #3	17	19	25	28	30	34
	#1 thru #4	23	25	31	37	39	45
	#1 thru #5	29	31	40	45	50	56
	#1 thru #6	35	37	48	55	60	68
	#1 thru #7	40	43	56	66	72	81
	#1 thru #8	45	50	68	76	86	96
	#1 thru #9	50	54	80	92	98	110

Table 6.

⚠ WARNING

The location of fresh air capable models must conform to the requirements of National Fire Protection Association NFPA No. 54 in regards to proximity of forced air inlets to flue gas terminals. Improper installation could result in personal injury or death.

Thermostat

The room thermostat should be located on an inside wall where it will not be subject to drafts, sun exposure, or heat from electrical fixtures or appliances. Follow manufacturer's instructions enclosed with the thermostat for general installation procedures. Color-coded insulated wires (#18 AWG) should be used to connect the thermostat to the unit.

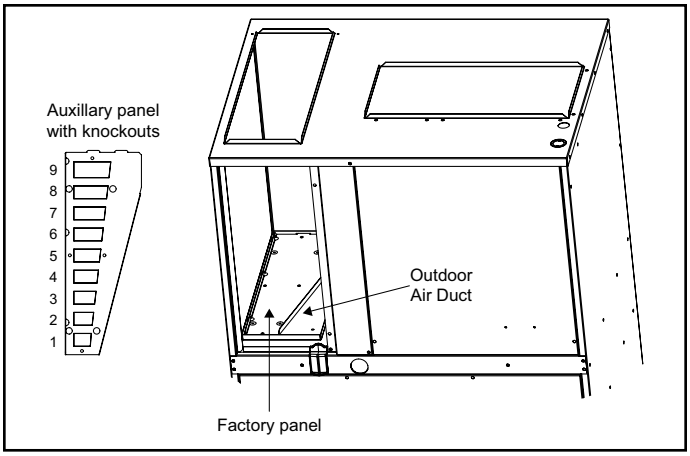

Figure 7. Auxiliary and Factory Panel for Outdoor Air Duct

Electrical Connections

All wiring must be done in accordance with the National Electrical Code (NEC), ANSI/NFPA No. 70 (latest edition); Canadian Electrical Code CSA C22.2 Part 1 (latest edition); or local codes, where they prevail. Any alteration of internal wiring will void certification and warranty.

Units are factory wired for a 230 volt power supply. If power supply is 208 volts, it will be necessary to change a wire connection on unit transformer from 240 volt terminal to 208 volt terminal as shown on the wiring diagram.

Use wiring with a temperature limitation of 75°F minimum. Run the 208 or 230 volt, single phase, 60 hertz electric power supply through a fused disconnect switch to the control box of the unit and connect as shown in the unit's wiring diagram.

The unit must be electrically grounded in accordance with local codes or, in the absence of local codes, with the National Electrical Code ANSI/NFPA No. 70 (latest edition) or CSA C22.2 Part 1 (latest edition).

Power supply to the unit must be NEC Class 1 and must comply with all applicable codes. A fused disconnect switch should be field provided for the unit. The switch must be separate from all other circuits. If any of the wire supplied with the unit must be replaced, replacement wire must be of the type shown on the wiring diagram. Electrical wiring must be sized to minimum circuit ampacity marked on the unit. **Use copper conductors only**. Each unit must be wired with a separate branch circuit and be properly fused.

Operation

Sequence of Operation

Upon initial "power up" to unit, there is a 3-minute time delay to the compressor contactor (R to Y). Any 24V interrupt (R, C) to the defrost control will initiate the 3-minute delay to the contactor.

Cooling

When the thermostat is in the cooling mode, the O circuit is powered which energizes the reversing valve. Upon cooling demand, the thermostat closes circuit R to Y and G. Closing R to Y closes the unit contactor, starting the compressor and outdoor fan, and signaling the indoor blower to run at cooling speed. Upon satisfying cooling demand, the thermostat will open the above circuits and open the main contactor, stopping the compressor and outdoor fan. The unit is equipped with a blower OFF delay; the blower will continue to operate for a fixed 90 seconds after the thermostat is satisfied.

Heating

Upon heating demand, the thermostat closes circuit R to W. On units supplied with heat strips, the sequencers are then energized and bring on the auxiliary electric heat. Units with no factory heat installed contain an auxiliary heat relay that will close, energizing the 24VAC output. This output can be used to control (not power) an auxiliary heat source. The W signal from the thermostat brings the indoor blower on at electric heat speed. Upon satisfying heating demand, the thermostat opens the above circuits and stops unit operation.

The unit is equipped with a blower OFF delay; the blower will continue to operate for a fixed 120 seconds (electric heat) after the thermostat is satisfied.

NOTE: *The 7.2 and 10 kW heats strips offer a W1 and W2 thermostat connection. Taking advantage of the two heat strip circuits requires a 3-stage thermostat (Y for heat pump, W1 for electric heat stage 1, and W2 for electric heat stage 2). If a 2-stage thermostat is used, "pigtail" W1 and W2 wires together when connecting the thermostat wires at the unit.*

Maintenance

⚠ WARNING

Disconnect all electrical power to the unit before conducting any maintenance procedures. Failure to disconnect the power could result in personal injury or death.

Periodic inspection and maintenance normally consists of changing or cleaning filters and (under some conditions) cleaning the coils.

Filter

Inspect the filter once a month. Replace disposable filter or clean the washable filter as necessary (a minimum of three times each heating or cooling season is recommended). Do not replace washable filter with a disposable filter unless an installation was made in which the filter was mounted exterior to the unit (see **Air Filter** section).

To clean the washable filter, shake filter to remove excess dirt and/or use a vacuum cleaner. Wash filter in soap or detergent water and replace after filter is dry. It is not necessary to oil the filter after washing.

Motors

The indoor and outdoor fan motors are permanently lubricated and require no maintenance.

Outdoor Coil

Foreign material should not be allowed to accumulate on the outdoor coil surface or other parts in the air circuit. Cleaning should be as often as necessary to keep the coil clean. To clean the coil, remove the lower access panel and blow out debris by using compressed air or water. **Be sure power to unit is shut off before using water to clean the coil.**

Care should be used when cleaning the coils so that the coil fins are not damaged.

Outdoor Base Drain

Foreign material should not be allowed to clog the drain hole. Inspect and clear drain opening.

Accessories

	Accessory	Nomenclature	MagicPak Unit					
			*MCE4-11-091*P	*MCE4-11-121*P	*MCE4-11-181*P	*MCE4-11-241*P	*MCE4-11-301*P	*MCE4-11-361*P
Polypropylene Louvers	Polypropylene Louver Kit - White (29" Height)	ALVRPWHT-1	●	●	●	●		
	Polypropylene Louver Kit - White (33" Height)	ALVRPWHT-2	○	○	○	○	●	
	Polypropylene Louver Kit - White (45" Height)	ALVRPWHT-3	○	○	○	○	○	●
	Polypropylene Louver Kit - Sandstone (29" Height)	ALVRPSAN-1	●	●	●	●		
	Polypropylene Louver Kit - Sandstone (33" Height)	ALVRPSAN-2	○	○	○	○	●	
	Polypropylene Louver Kit - Sandstone (45" Height)	ALVRPSAN-3	○	○	○	○	○	●
	Polypropylene Louver Kit - Beige (29" Height)	ALVRPBGE-1	●	●	●	●		
	Polypropylene Louver Kit - Beige (33" Height)	ALVRPBGE-2	○	○	○	○	●	
	Polypropylene Louver Kit - Beige (45" Height)	ALVRPBGE-3	○	○	○	○	○	●
	Polypropylene Louver Kit - Taupestone (29" Height)	ALVRPTPST-1	●	●	●	●		
	Polypropylene Louver Kit - Taupestone (33" Height)	ALVRPTPST-2	○	○	○	○	●	
	Polypropylene Louver Kit - Taupestone (45" Height)	ALVRPTPST-3	○	○	○	○	○	●
Aluminum Louvers	Extruded Aluminum Louver Kit (29" Height)	ALVRAL-1	●	●	●	●		
	Extruded Aluminum Louver Kit - Custom Color (29" Height)	ALVRAL-1P	●	●	●	●		
	Extruded Aluminum Louver Kit (33" Height)	ALVRAL-2					●	
	Extruded Aluminum Louver Kit - Custom Color (33" Height)	ALVRAL-2P					●	
	Extruded Aluminum Louver Kit (33" Height)	ALVRAL-7	○	○	○	○		
	Extruded Aluminum Louver Kit - Custom Color (33" Height)	ALVRAL-7P	○	○	○	○		
	Extruded Aluminum Louver Kit (45" Height)	ALVRAL-3	○	○	○	○		
	Extruded Aluminum Louver Kit - Custom Color (45" Height)	ALVRAL-3P	○	○	○	○		
	Extruded Aluminum Louver Kit (45" Height)	ALVRAL-4					○	●
	Extruded Aluminum Louver Kit - Custom Color (45" Height)	ALVRAL-4P					○	●
Impact Rated Louvers	Extruded Aluminum Louver Kit - Impact Rated (29" Height)	ALVRALC-1	●	●	●	●		
	Extruded Aluminum Louver Kit - Impact Rated / Custom Color (29" Height)	ALVRALC-1P	●	●	●	●		
	Extruded Aluminum Louver Kit - Impact Rated (33" Height)	ALVRALC-2					●	
	Extruded Aluminum Louver Kit - Impact Rated / Custom Color (33" Height)	ALVRALC-2P					●	
	Extruded Aluminum Louver Kit - Impact Rated (45" Height)	ALVRALC-3	○	○	○	○		
	Extruded Aluminum Louver Kit - Impact Rated / Custom Color (45" Height)	ALVRALC-3P	○	○	○	○		
	Extruded Aluminum Louver Kit - Impact Rated (45" Height)	ALVRALC-4					○	●
	Extruded Aluminum Louver Kit - Impact Rated / Custom Color (45" Height)	ALVRALC-4P					○	●

○ Optional: Wall sleeves and louvers can be oversized to maintain a uniform appearance

Table 7. Accessories

Wall Sleeve		Nomenclature	MagicPak Unit						Dimensions (in)				
			*MCE4-11-091*P	*MCE4-11-121*P	*MCE4-11-181*P	*MCE4-11-241*P	*MCE4-11-301*P	*MCE4-11-361*P	A	B	C	D	E
6” Wall Sleeve Kit	for 29” Louver	ASLEEVE6-1	●	●	●	●			6	29	16	16-5/8	29-1/8
	for 33” Louver	ASLEEVE6-2	●	●	●	●	●		6	32-3/4	16	16-5/8	32-7/8
	for 45” Louver	ASLEEVE6-5	●	●	●	●	●	●	6	45	16	16-5/8	45-1/8
8” Wall Sleeve Kit	for 29” Louver	ASLEEVE8-1	●	●	●	●			8	29	16	16-5/8	29-1/8
	for 33” Louver	ASLEEVE8-2	●	●	●	●	●		8	32-3/4	16	16-5/8	32-7/8
	for 45” Louver	ASLEEVE8-5	●	●	●	●	●	●	8	45	16	16-5/8	45-1/8
10” Wall Sleeve Kit	for 29” Louver	ASLEEVE10-1	●	●	●	●			10	29	16	16-5/8	29-1/8
	for 33” Louver	ASLEEVE10-2	●	●	●	●	●		10	32-3/4	16	16-5/8	32-7/8
	for 45” Louver	ASLEEVE10-5	●	●	●	●	●	●	10	45	16	16-5/8	45-1/8
12” Wall Sleeve Kit	for 29” Louver	ASLEEVE12-1	●	●	●	●			12	29	16	16-5/8	29-1/8
	for 33” Louver	ASLEEVE12-2	●	●	●	●	●		12	32-3/4	16	16-5/8	32-7/8
	for 45” Louver	ASLEEVE12-5	●	●	●	●	●	●	12	45	16	16-5/8	45-1/8
Thru-The-Wall-Sleeve-Kit		ASLEEVE-3	●	●	●				N/A	45	16	16-5/8	45-1/8

Table 8. Wall Sleeves

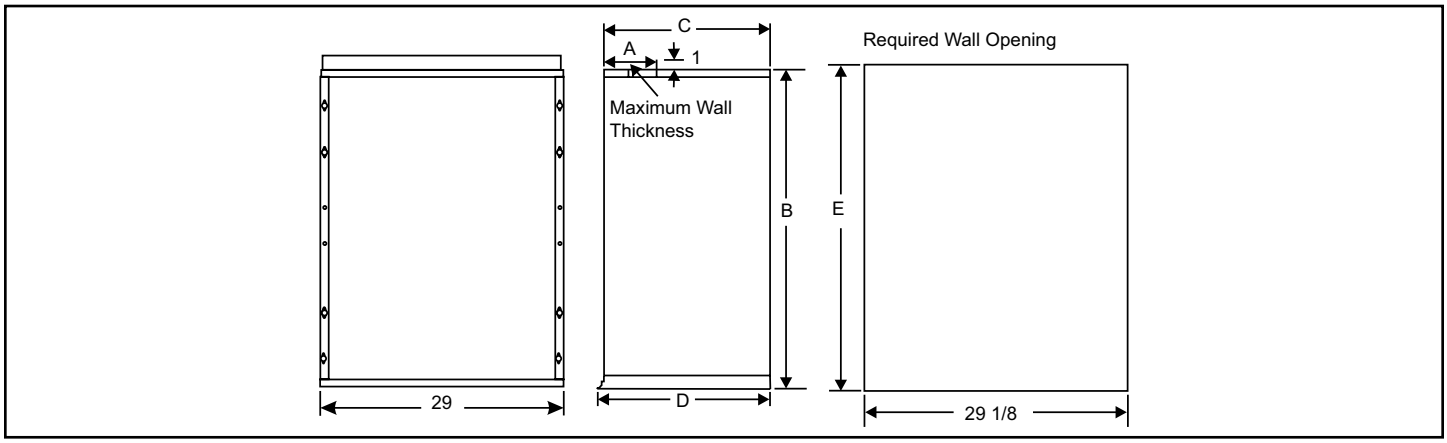

Figure 8.

⚠ WARNING

The unit must be installed with approved wall sleeve and grille accessories for safe operation. Improper installations could result in property damage, personal injury, or death.

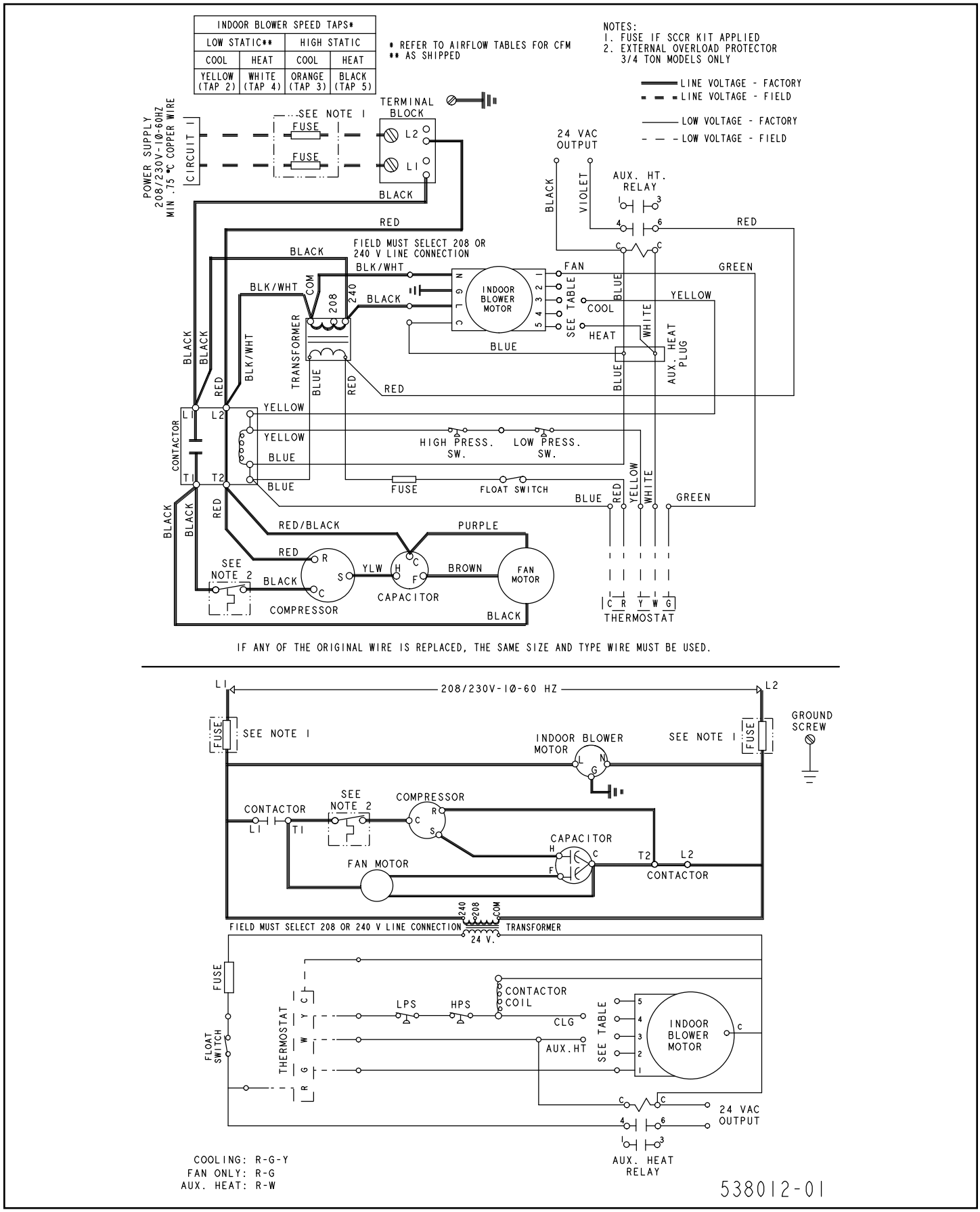

Figure 9. Connection Diagram - MCE Without Electric Heater

INDOOR BLOWER SPEED TAPS*			
LOW STATIC**		HIGH STATIC	
COOL	HEAT	COOL	HEAT
YELLOW (TAP 2)	WHITE (TAP 4)	ORANGE (TAP 3)	BLACK (TAP 5)

NOTES:
1. FUSE IF SCCR KIT APPLIED
2. EXTERNAL OVERLOAD PROTECTOR 3/4 TON MODELS ONLY

* REFER TO AIRFLOW TABLES FOR CFM
** AS SHIPPED

LINE VOLTAGE - FACTORY
LINE VOLTAGE - FIELD
LOW VOLTAGE - FACTORY
LOW VOLTAGE - FIELD

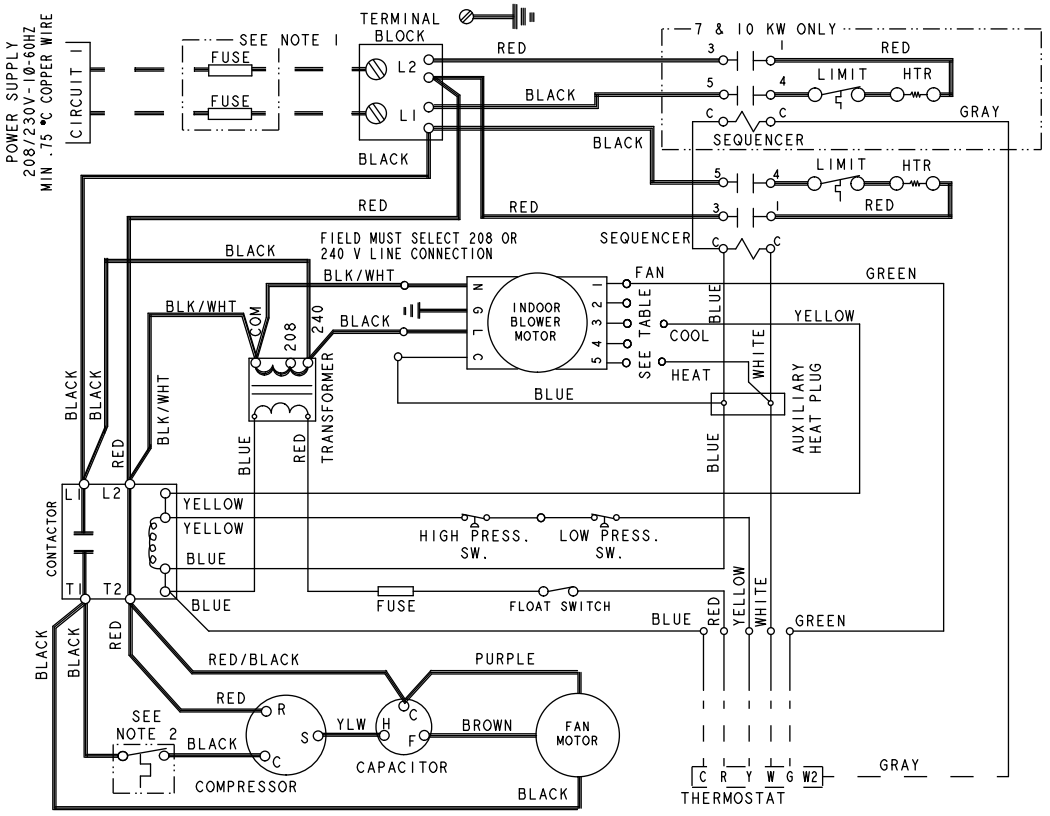

IF ANY OF THE ORIGINAL WIRE IS REPLACED, THE SAME SIZE AND TYPE WIRE MUST BE USED.

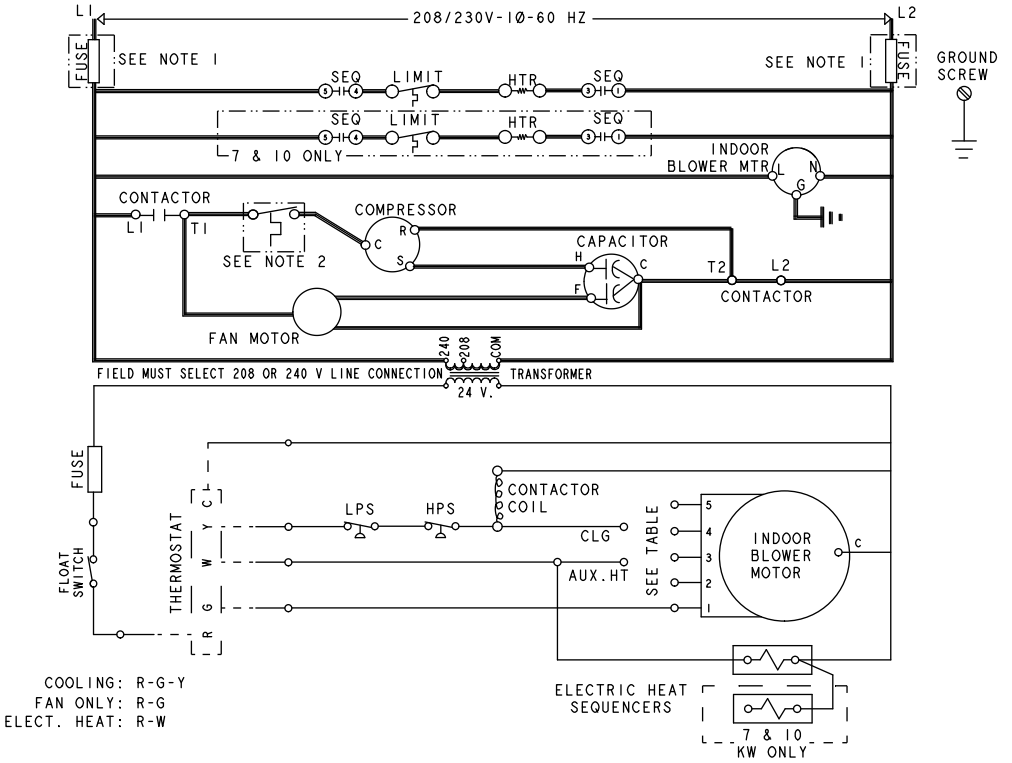

538013-01

Figure 10. Connection Diagram - MCE With Factory Installed Electric Heater