MOVINCOOL®

SPARE PARTS CATALOG

CLIMATE PRO® X26

SERIAL NUMBER LOCATION

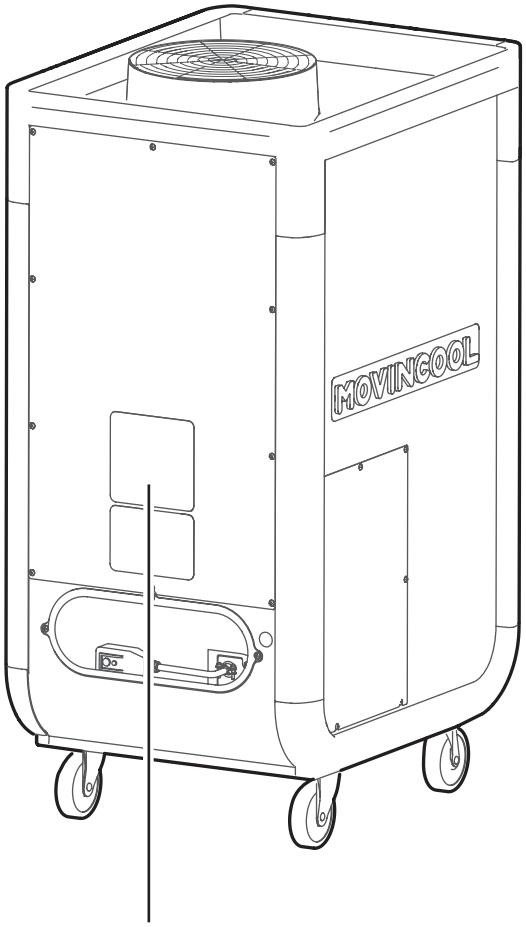

00	00	0000	000
Month	Year	Sequential number	Model name

© 2020 DENSO PRODUCTS AND SERVICES AMERICAS, INC. All rights reserved.
MovinCool® and Climate Pro® are registered trademarks of DENSO Corporation.

TABLE OF CONTENTS

SERIAL NUMBER LOCATION — 2

Unit Part No: 484000-4730

Unit Serial No. Range: 1119**X26 to Present**

Main Structure Parts — 4

Bumper Panel Parts — 8

Refrigeration Parts — 10

Blower Parts — 12

Control Box Parts_1 — 14

Control Box Parts_2 — 16

REFERENCE TABLE — 18

Main Structure Parts

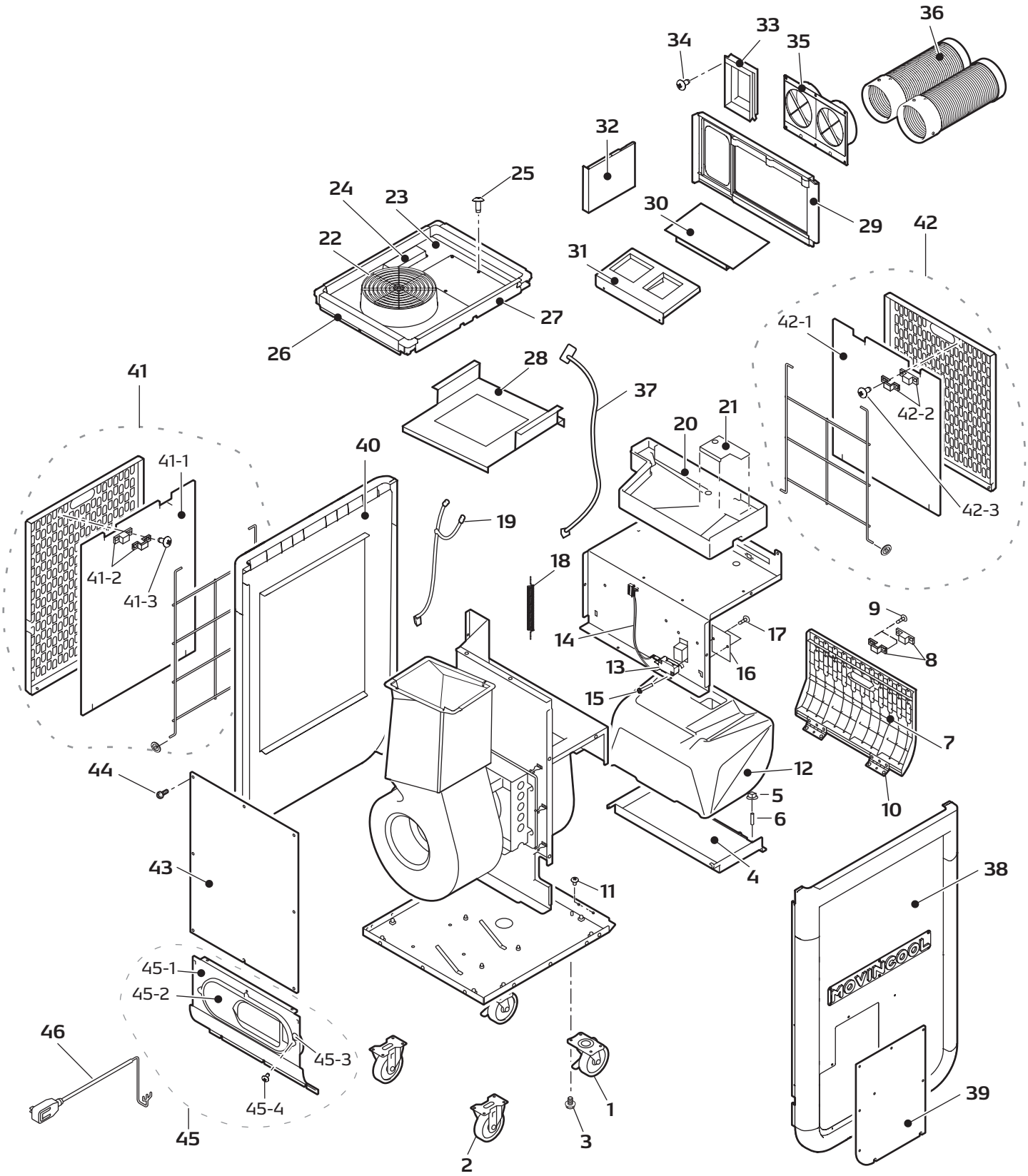

Unit Part No: 484000-4730
Unit Serial No. Range: 1119****X26 to Present

Main Structure Parts

No.	NAMES OF PARTS	PART No.	QTY	S/N RANGE*1	REMARKS*2
1	Caster, w/Brake	484702-0560	2		
2	Caster	484702-0570	2		
3	Bolt, w/Washer	91570-08201	8		M8 x 1.25, L=20
4	Frame Sub-Assy	484301-6750	1		
5	Nut	949056-1501	8		
6	Spacer, Metal	482837-0610	2		
7	Drain Tank Cover	484490-0910	1		
8	Latch & Strike	484927-1580	2		
9	Screw, Tapping	482801-2870	4		D=3, L=8
10	Hinge	484912-0200	2		
11	Screw	949006-8410	4		M4 x 0.7, L=5
12	Drain Tank	484731-0300	1		
13	Switch, Drain Tank	484502-0520	1		
14	Wire Assy	481950-3890	1		For Drain Tank
15	Screw, w/Washer	91310-03161	2		M3 x 0.5, L=16
16	Connector Cover Plate	484311-4100	1		
17	Bolt	480919-1820	2		M4 x 0.7, L=10 Black
18	Spring, Tension Coil	949171-2090	2		For Drain Tank
19	Thermistor Assy	484532-0450	1		
20	Pan Assy, Drain	484430-0871	1		
21	Bracket	484321-4831	1		
22	Round Duct	484351-1120	1		
23	Panel Sub Assy	484470-5540	1		
24	Antenna	484500-5041	1		w/Wire
25	Bolt	480919-1820	6		M4 x 0.7, L=10 Black
26	Bumper, Top Panel	484301-6970	2		
27	Bracket, Top Panel	484321-5030	2		
28	Bracket	484320-0970	1		

*1 Refer to page 2 for the position of the serial number on the unit. This column shows the first four digits of the serial number.
*2 Refer to the Reference Table on page 18 for more information on the remarks.

Unit Part No: 484000-4730
Unit Serial No. Range: 1119****X26 to Present

Main Structure Parts

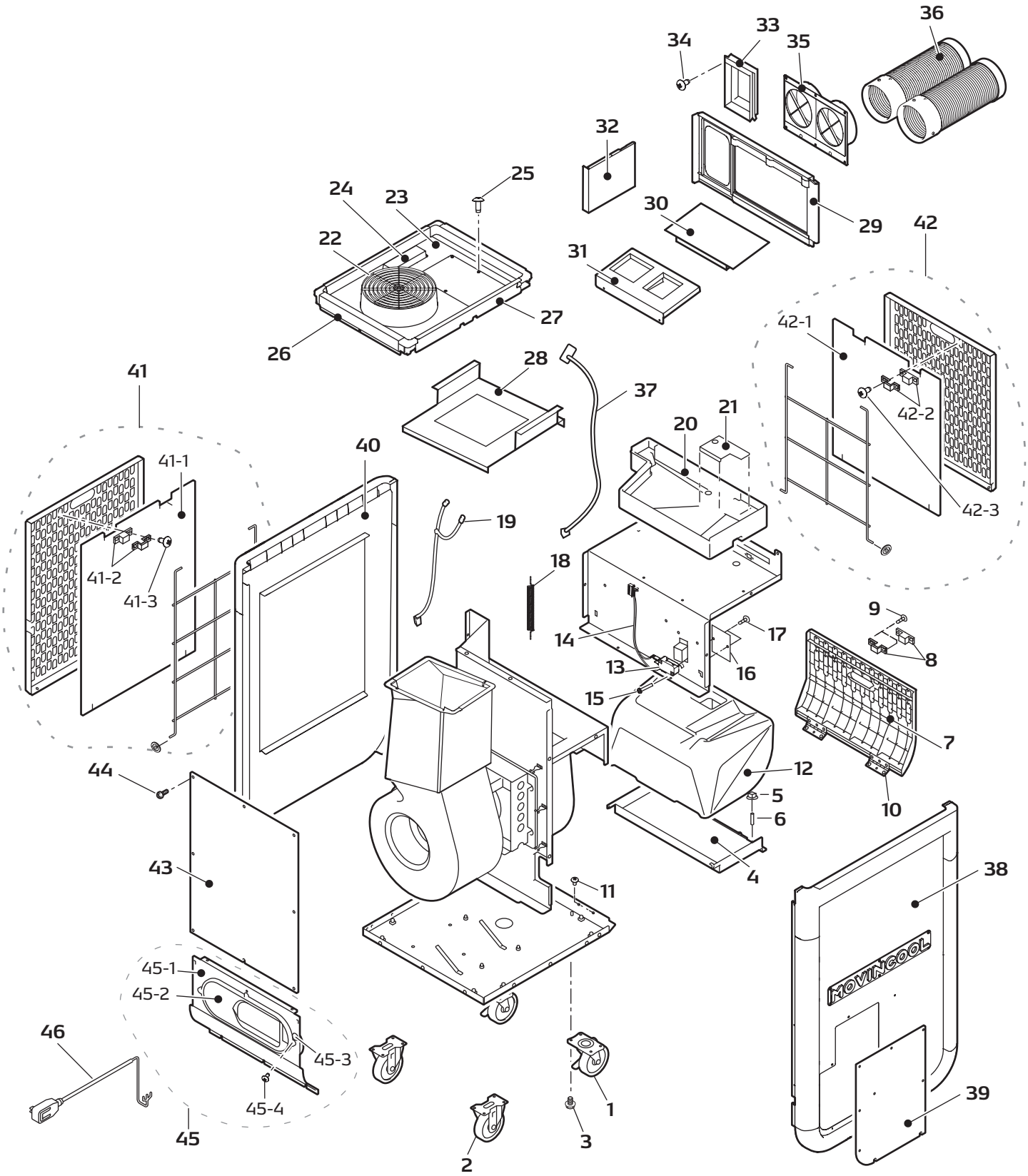

Y021

Unit Part No: 484000-4730
Unit Serial No. Range: 1119****X26 to Present

Main Structure Parts

No.	NAMES OF PARTS	PART No.	QTY	S/N RANGE*1	REMARKS*2
29	Panel Assy, Top Front	484390-1390	1		
30	Changeable Panel	484420-0780	1		
31	Deflector Air	484310-6900	1		
32	Stay, Control Panel, Left	484320-0860	1		
33	Controller Assy	484500-5130	1		Operation Panel
34	Screw, Tapping	482801-3270	4		D=4, L=12
35	Nozzle Adapter	484490-1060	1		
36	Nozzle	484350-1260	2		
37	Wire Assy	481950-3510	1		Main Harness (RB) ↔(CB)
38	Panel Assy, Logo Side	484490-1830	1		No.38-1 to 38-8, See page 8 & 9
39	Panel Assy, Service	484490-1000	1		
40	Panel Assy, Condenser Side	484490-1130	1		No.40-1 to 40-10, See page 8 & 9
41	Panel Assy, Condenser Filter	484400-0760	1		Filter Panel, Wire Frame & No.41-1 to 41-3
41-1	Filter, Condenser	484401-2470	1		
41-2	Latch & Strike	484927-1580	2		
41-3	Screw, Tapping	949006-3300	4		M3 x 0.5, L=6
42	Panel Assy, Front Filter	484400-0750	1		Filter Panel, Wire Frame & No.42-1 to 42-3
42-1	Filter, Evaporator	484401-2450	1		
42-2	Latch & Strike	484927-1580	2		
42-3	Screw, Tapping	949006-3300	4		M3 x 0.5, L=6
43	Panel Assy, Upper Rear	484490-1680	1		
44	Bolt	480919-1820	92		M4 x 0.7, L=10 Black
45	Panel Assy, Lower Rear	484490-0880	1		No.45-1 to 45-4
45-1	Panel	484411-7641	1		
45-2	Power Cord Holder	484521-1631	1		
45-3	Grommet	484926-0750	1		
45-4	Bolt	480919-1820	3		M4 x 0.7, L=10 Black
46	Wire Assy, Power Cord	481950-3581	1		LCDI

*1 Refer to page 2 for the position of the serial number on the unit. This column shows the first four digits of the serial number.
*2 Refer to the Reference Table on page 18 for more information on the remarks.

Unit Part No: 484000-4730
Unit Serial No. Range: 1119****X26 to Present

Bumper Panel Parts

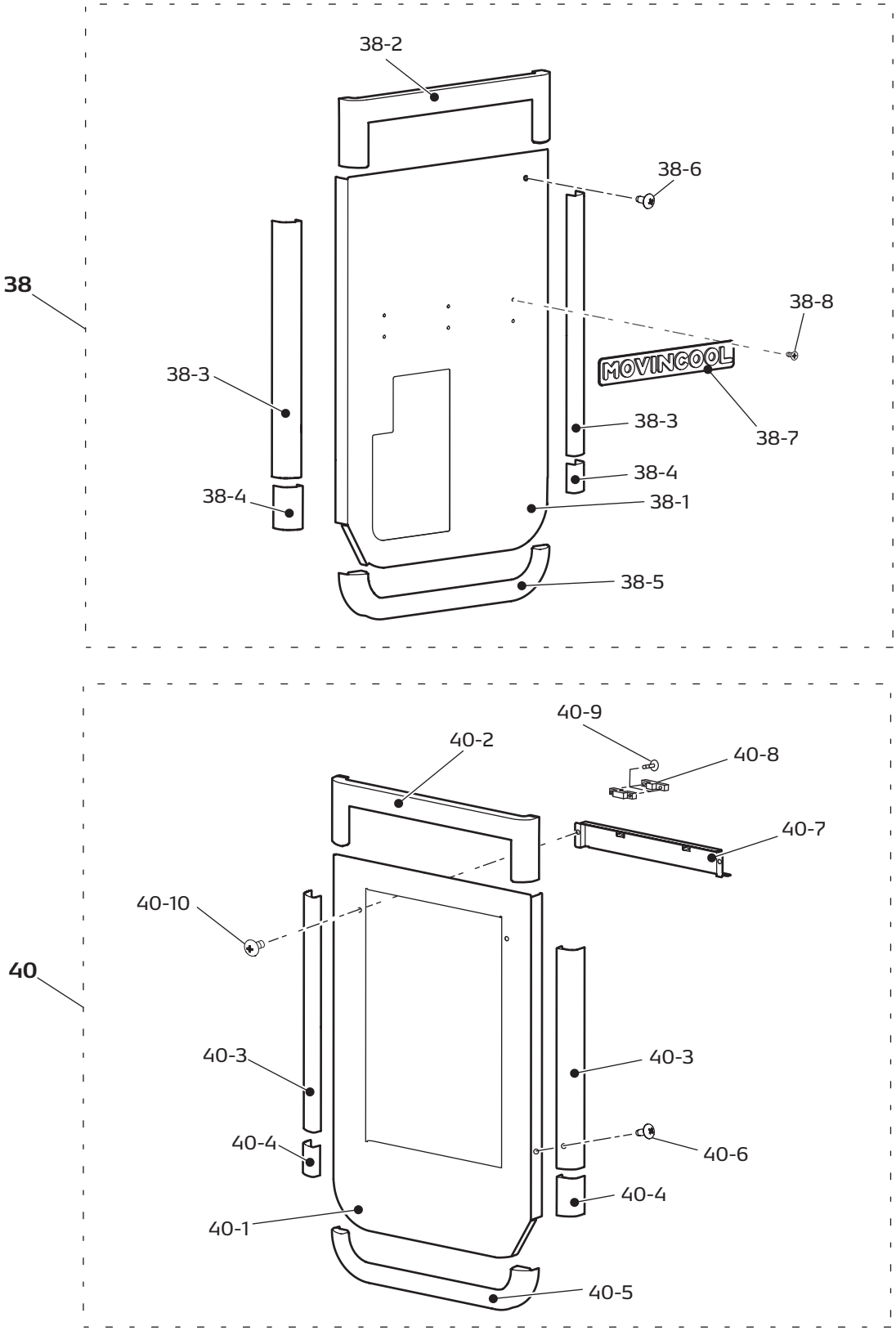

Y022

Unit Part No: 484000-4730
Unit Serial No. Range: 1119****X26 to Present

Bumper Panel Parts

No.	NAMES OF PARTS	PART No.	QTY	S/N RANGE*1	REMARKS*2
38	Panel Assy, Logo Side	484490-1830	1		No.38-1 to 38-8
38-1	Panel	484490-1670	1		
38-2	Upper Bumper	484301-6960	1		
38-3	Side Bumper	484301-6830	2		
38-4	Extension Bumper	484301-6850	2		
38-5	Lower Bumper	484301-6840	1		
38-6	Screw, Tapping	482801-3270	20		For Bumper, D4, L=12
38-7	Logo Plate	484311-4110	1		
38-8	Bolt	480919-1830	6		For Logo Plate, M4 × 0.7, L=10
40	Panel Assy, Condenser Side	484490-1130	1		No.40-1 to 40-10
40-1	Panel	484490-1690	1		
40-2	Upper Bumper	484301-6960	1		
40-3	Side Bumper	484301-6830	2		
40-4	Extension Bumper	484301-6850	2		
40-5	Lower Bumper	484301-6840	1		
40-6	Screw, Tapping	482801-3270	20		For Bumper, D4, L=12
40-7	Stay Assy	484330-0970	1		
40-8	Latch & Strike	484927-1580	2		
40-9	Screw, Tapping	949006-3300	4		M3 x 0.5, L=6
40-10	Bolt	480919-1820	2		M4 x 0.7, L=10 Black

*1 Refer to page 2 for the position of the serial number on the unit. This column shows the first four digits of the serial number.

*2 Refer to the Reference Table on page 18 for more information on the remarks.

Unit Part No: 484000-4730
Unit Serial No. Range: 1119****X26 to Present

Refrigeration Parts

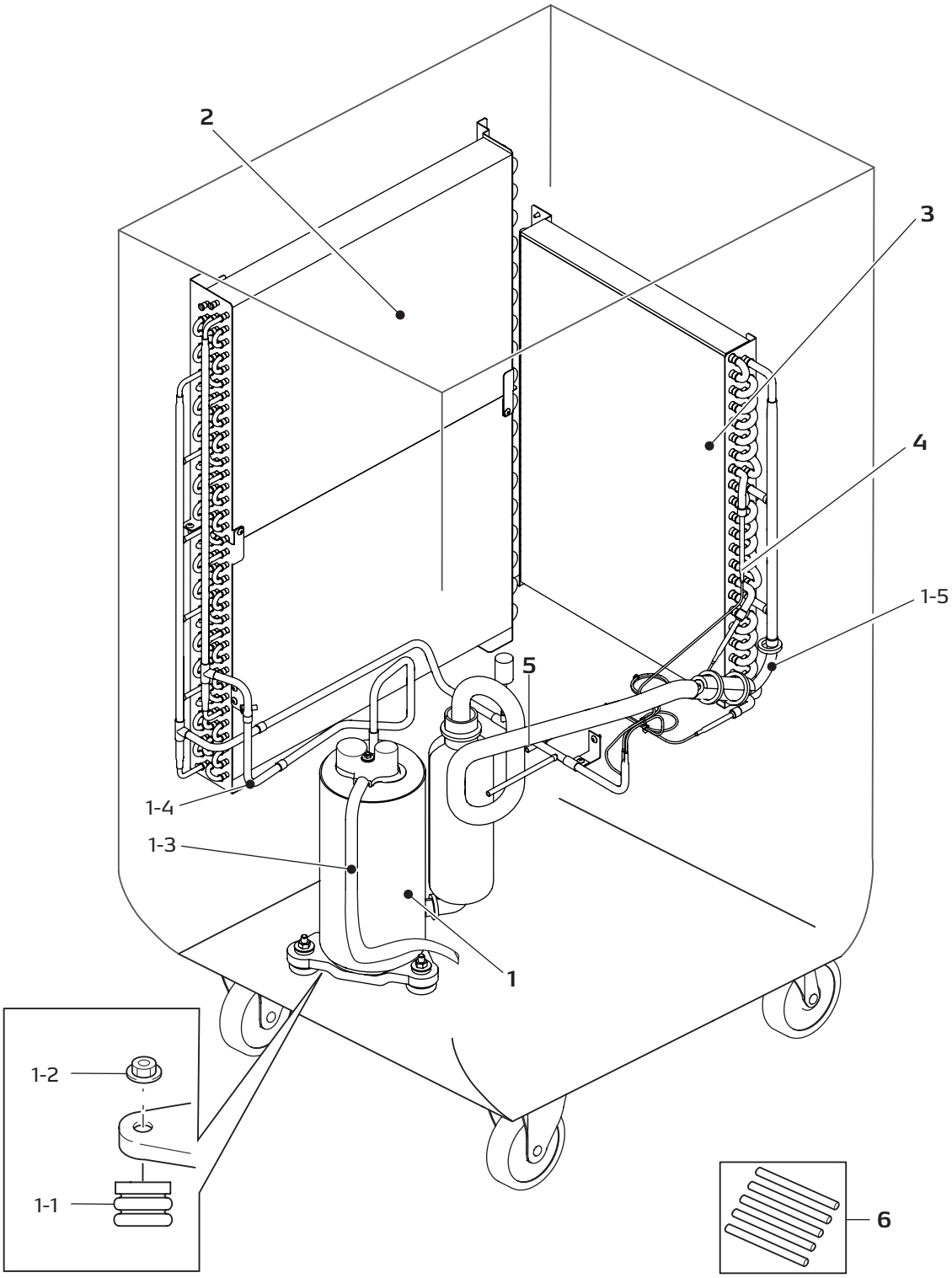

Y023

Unit Part No: 484000-4730
Unit Serial No. Range: 1119****X26 to Present

Refrigeration Parts

No.	NAMES OF PARTS	PART No.	QTY	S/N RANGE*1	REMARKS*2
1	Compressor Assy	484650-3550	1		w/No.1-1 to 1-5
1-1	Cushion	484904-0510	3		
1-2	Nut	482814-0300	3		w/Washer
1-3	Wire Assy	481950-3591	1		For Compressor
1-4	Pipe Assy, Connecting	480261-7710	1		For Discharge
1-5	Pipe Assy, Connecting	484800-6370	1		For Suction
2	Core Assy, Condenser	484600-3170	1		
3	Core Assy, Evaporator	484600-3190	1		
4	Pipe Assy, Capillary	484800-6380	1		
5	Wire Assy	481950-3520	1		For Ground
6	Pipe Assy, Charging	484800-0440	1		5 pieces per package

*1 Refer to page 2 for the position of the serial number on the unit. This column shows the first four digits of the serial number.

*2 Refer to the Reference Table on page 18 for more information on the remarks.

Unit Part No: 484000-4730
Unit Serial No. Range: 1119****X26 to Present

Blower Parts

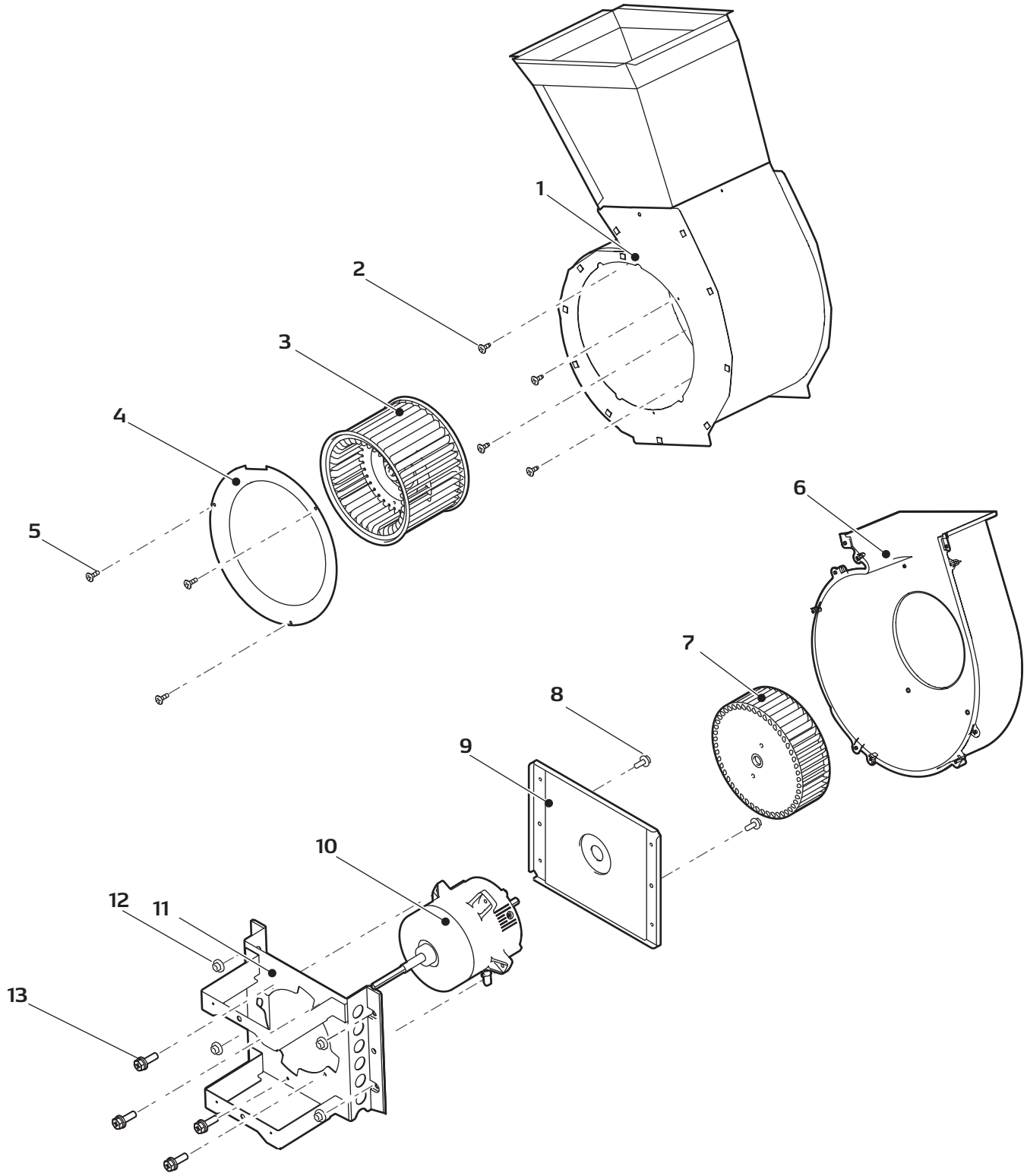

Y024

Unit Part No: 484000-4730
Unit Serial No. Range: 1119****X26 to Present

Blower Parts

No.	NAMES OF PARTS	PART No.	QTY	S/N RANGE*1	REMARKS*2
1	Casing, Condenser Fan	480420-0290	1		
2	Bolt	480919-1820	4		M4 x 0.7, L=10 Black
3	Fan, Condenser	484221-0920	1		
4	Ring	484381-1300	1		
5	Bolt	480919-1820	3		M4 x 0.7, L=10 Black
6	Casing Assy, Evaporator Fan	480420-0280	1		
7	Fan, Evaporator	484221-0910	1		
8	Screw	949006-5850	2		M4 x 0.7, L=10
9	Motor Stay	484310-7000	1		
10	Fan Motor	484211-2430	1		
11	Frame Sub-Assy	484310-6960	1		
12	Nut	949056-1430	4		M6
13	Bolt, w/Washer	91570-06201	4		M6, L20

*1 Refer to page 2 for the position of the serial number on the unit. This column shows the first four digits of the serial number.

*2 Refer to the Reference Table on page 18 for more information on the remarks.

Unit Part No: 484000-4730
Unit Serial No. Range: 1119****X26 to Present

Control Box Parts_1

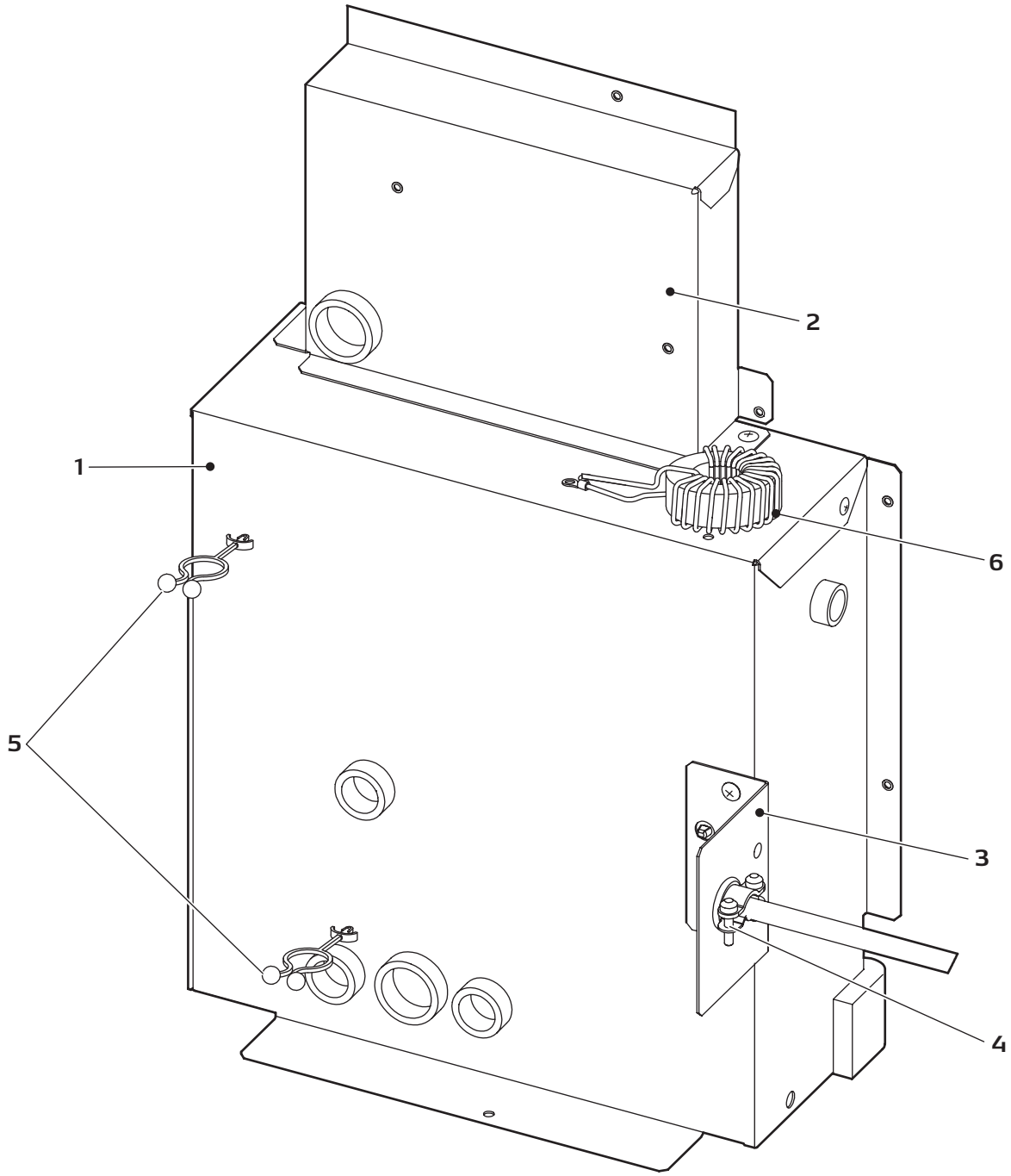

Y007

Unit Part No: 484000-4730
Unit Serial No. Range: 1119****X26 to Present

Control Box Parts_1

No.	NAMES OF PARTS	PART No.	QTY	S/N RANGE*1	REMARKS*2
1	Service Box	484520-1480	1		
2	Service Box	484321-4870	1		For Communication Module
3	Bracket	484321-4840	1		
4	Connector	479748-0020	1		
5	Clamp	481902-0070	2		
6	Wire Assy	481950-3600	1		

*1 Refer to page 2 for the position of the serial number on the unit. This column shows the first four digits of the serial number.

*2 Refer to the Reference Table on page 18 for more information on the remarks.

Unit Part No: 484000-4730
Unit Serial No. Range: 1119****X26 to Present

Control Box Parts_2

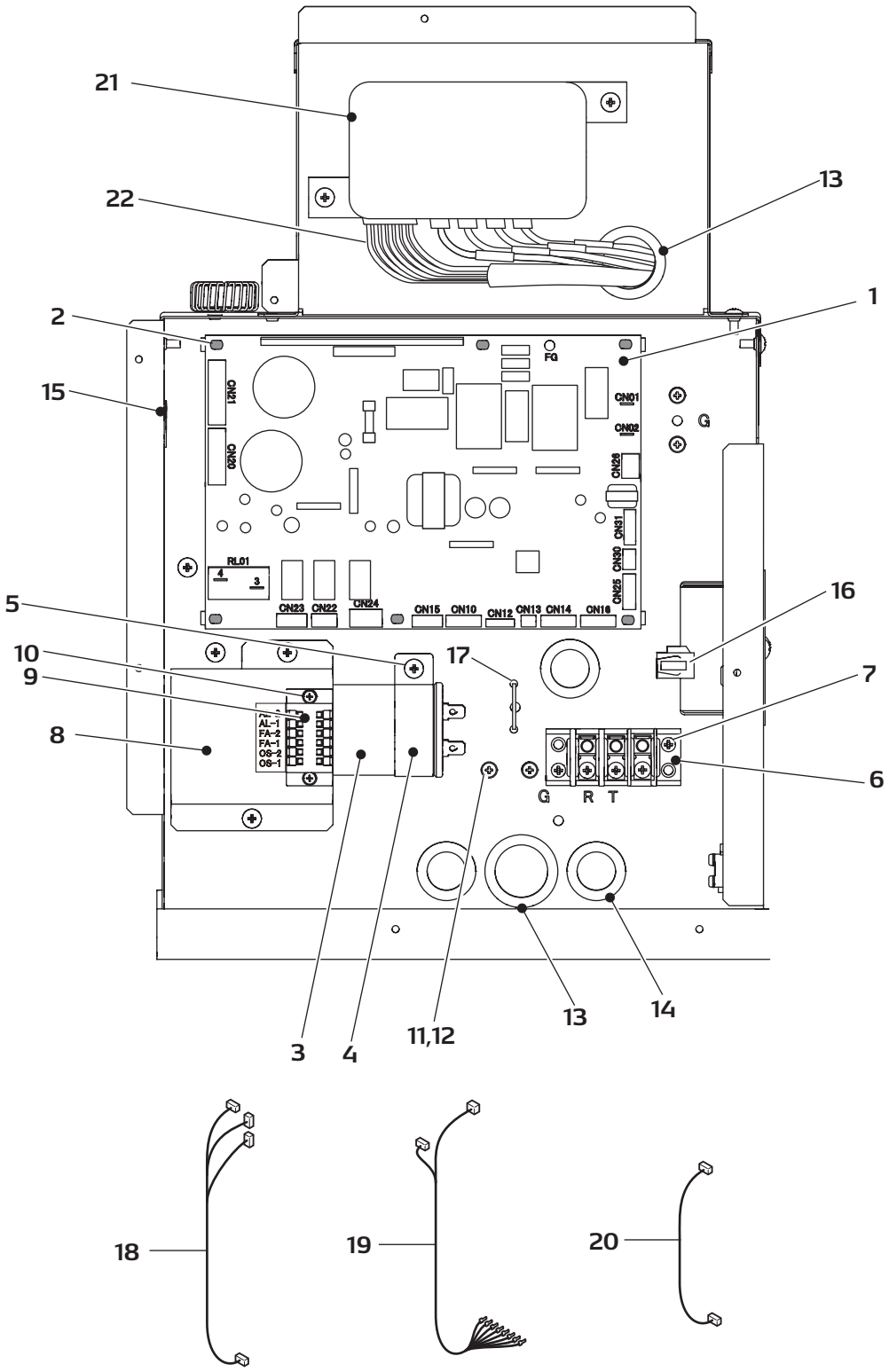

Y008

Unit Part No: 484000-4730
Unit Serial No. Range: 1119****X26 to Present

Control Box Parts_2

No.	NAMES OF PARTS	PART No.	QTY	S/N RANGE*1	REMARKS*2
1	Relay Board	484500-5370	1		
2	Support	465586-0220	6		
3	Capacitor, Compressor	484507-2270	1		370VAC, 50μF
4	Holder	484321-4850	1		
5	Screw	949006-5850	9		
6	Terminal Block	484503-1590	1		For Power
7	Screw	949001-0800	2		M4 x 0.7, L=16
8	Bracket	484320-0960	1		
9	Terminal Block	484503-1570	1		For Input/Output Signal
10	Screw, w/Washer	91370-03081	2		M3 x 0.5, L=8
11	Screw	91051-04080	3		Ground (M4×0.7, L=10)
12	Washer, Plate	90201-04300	2		
13	Grommet	484926-0860	2		Φ26
14	Grommet	949321-3010	3		Φ19
15	Grommet	949321-3000	1		Φ15
16	Connector, Jumper	481950-3460	1		Drain Pump
17	Clamp	481902-0070	1		
18	Wire Assy	481950-3470	1		(RB)↔(TB)
19	Wire Assy	481950-3480	1		(RB)↔(TB)
20	Wire Assy	481950-3500	1		(RB, CC)↔(TB)
21	Communication Module	484500-5011	1		
22	Wire Assy	481950-3541	1		For Communication Module

*1 Refer to page 2 for the position of the serial number on the unit. This column shows the first four digits of the serial number.
*2 Refer to the Reference Table on page 18 for more information on the remarks.

Unit Part No: 484000-4730
Unit Serial No. Range: 1119****X26 to Present

REFERENCE TABLE

ABBREVIATION	MEANING
CB	Control Board
CC	Capacitor for Compressor
LCDI	Leakage Current Detection Interrupter
RB	Relay Board
TB	Terminal Block

MEMO

DENSO

DENSO PRODUCTS AND SERVICES AMERICAS, INC.

Long Beach, CA 90810
www.movincool.com

First Edition: February 2020

SPC06-00