ENGINEERING
TOMORROW

Data sheet

# Check valve

## Types NRV and NRVH Version 2

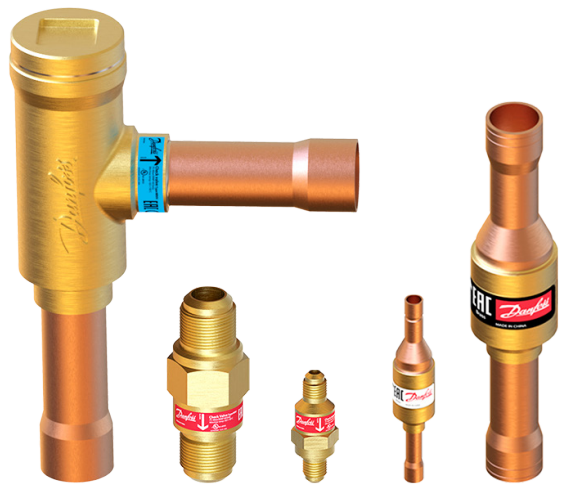

NRV and NRVH piston type check valves are designed for installation in commercial refrigerating systems and in residential or industrial air conditioning plants. They are used to control the unidirectional flow of refrigerant so as to prevent backflow.

**Features**

- Ensure correct flow direction
- Available in both straightway and angleway versions
- Hermetic tight design for solder versions
- Built-in damping piston that makes the valves suitable for installation in lines where pulsation can occur, e.g. in the discharge line from the compressor
- NRVH type check valve is with stronger spring and it's recommended to use for compressors in parallel (i.e. power packs) where higher level of pulsation and vibration are expected
- Oversize connections provide flexibility in use

## Approvals

## Technical data

| Valve type | Connection type | Max. working pressure (PS/MWP) | Refrigerants |
|---|---|---|---|
| **NRV/NRVH 6-19** | Straight-way - flare | 46 bar/ 667 psig | R134a, R22/R407C, R404A/R507, R407A, R407F, R407H, R410A, R448A, R449A, R449B, R450A, R452A, R513A, R515B, R1233zd(E), R1234ze(E) |
| **NRV/NRVH 22s-28s** | Angle-way - solder | 46 bar/ 667 psig | R134a, R22/R407C, R290, R404A/R507, R407A, R407F, R407H, R410A, R448A, R449A, R449B, R450A, R452A, R452B, R454A, R454B, R454C, R455A, R513A, R515B, R516A, R600, R600a, R1233zd(E), R1234ze(E), R1234yf, R1270 |
| **NRV/NRVH 28s [1])-35s [1])** | Angle-way - solder | 46 bar/ 667 psig | R134a, R22/R407C, R404A/R507, R407A, R407F, R407H, R410A, R448A, R449A, R449B, R450A, R452A, R513A, R515B, R1233zd(E), R1234ze(E) |
| **NRV/NRVH 6s-19s [1])** | Straight-way - solder | 49 bar / 710 psig | R134a, R22/R407C, R290, R32, R404A/R507, R407A, R407F, R407H, R410A, R448A, R449A, R449B, R450A, R452A, R452B, R454A, R454B, R454C, R455A, R513A, R515B, R516A, R600, R600a, R1233zd(E), R1234ze(E), R1234yf, R1270 |
| **NRV/NRVH 22s E-28s E** | Angle-way - solder | 49 bar / 710 psig | R290, R32, R452B, R454A, R454B, R454C, R455A, R516A, R600, R600a, R1234yf, R1270 |
| **NRV/NRVH 28s E [1])-35s E [1])** | Angle-way - solder | 49 bar / 710 psig | R32, R452B, R454A, R454B, R454C, R455A, R516A, R1234yf |

*[1]) Oversize connections*

**Refrigerant oil: POE, PAG (PVE, PAO)**

*Note:*
- *For complete list of approved refrigerants, go to http://store.danfoss.com/ and search for individual code numbers, where refrigerants are listed as part of product details.*
*This product is approved for R290, R32, R452B, R454A, R454B, R454C, R455A, R516A, R600, R600a, R1234yf and R1270 by ignition source assessment in accordance to standard EN13463-1.*
- *R1234ze can be used for NRV size up to 35s according to the PED category I, Fluid II*
- *NRV/NRVH is not suitable for oil line application. For detailed information please contact Danfoss.*

## Dimensioning and selection

When selecting the right Danfoss check valve the capacity tables should be utilised together with plant requirements concerning piping and connection sizes.
The optimum solution should include the highest capacity at lowest pressure drop across the valve before it closes. Further, when dimensioning and selecting Danfoss check valves for mounting into the compressor discharge line, it is important to be aware of the following:

The differential pressure across the valve must always be higher than the given minimum pressure drop at which the valve is completely open. This also applies to lowest capacities for compressor with capacity regulation.

NRVH type check valve is with stronger spring and it's recommended to use for compressors in parallel (i.e. power packs) where higher level of pulsation and vibration are expected.

## Design / Function

1. Copper tube
2. Solder ring
3. Washer
4. Teflon disk
5. Piston
6. Spring
7. Valve body
8. Guide
9. Stop face
10. Cover

**Straightway solder version**

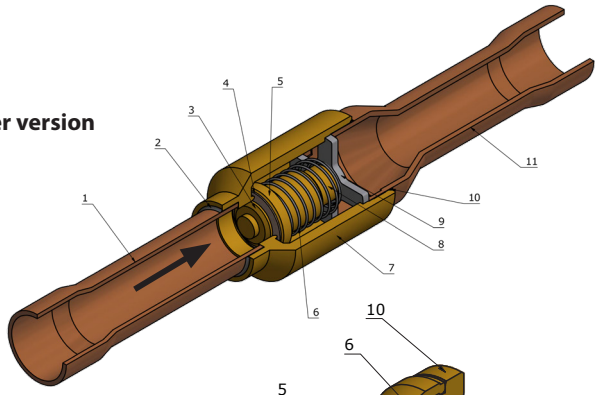


**Angleway solder version**

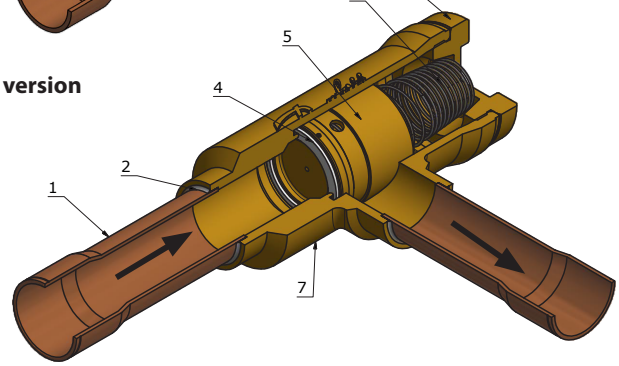

## Ordering

### Straightway Flare Version without flare nut

| Valve type | Connection [in] | Connection [mm] | Min. OPD Δp [2]) [bar] | Min. OPD Δp [2]) [psi] | $K_v$ value [3]) [m³/h] | $C_v$ value [3]) [gal/min] | Max. working pressure: PS/MWP | Media temperature range | For flammable refrigerant [4]) | PED category | Code no. Multi pack [5]) |
|---|---|---|---|---|---|---|---|---|---|---|---|
| NRV 6 | 1/4 | 6 | 0.07 | 1.01 | 0.56 | 0.65 | 46 bar / 667 psig | -50 °C - 140 °C / -58 °F - 285 °F | No | Article 4, Paragraph 3 | 020-1040 |
| NRV 10 | 3/8 | 10 | 0.07 | 1.01 | 1.2 | 1.39 | | | | | 020-1041 |
| NRV 12 | 1/2 | 12 | 0.05 | 0.72 | 2.05 | 2.37 | | | | | 020-1042 |
| NRV 16 | 5/8 | 16 | 0.05 | 0.72 | 3.6 | 4.16 | | | | | 020-1043 |
| NRV 19 | 3/4 | 19 | 0.05 | 0.72 | 5.5 | 6.36 | | | | | 020-1044 |

### Angleway Solder ODF Version, PS = 46 bar

| Valve type | Connection [in] | Connection [mm] | Min. OPD Δp [2]) [bar] | Min. OPD Δp [2]) [psi] | $K_v$ value [3]) [m³/h] | $C_v$ value [3]) [gal/min] | Max. working pressure: PS/MWP | Media temperature range | For flammable refrigerant [4]) | PED category | Code no. Multi pack [5]) |
|---|---|---|---|---|---|---|---|---|---|---|---|
| NRV 22s | 7/8 | 22 | 0.04 | 0.58 | 8.5 | 9.83 | 46 bar / 667 psig | -50 °C - 140 °C / -58 °F - 285 °F | Yes | Article 4, Paragraph 3 | 020-1020 |
| NRVH 22s | 7/8 | 22 | 0.30 | 4.35 | 8.5 | 9.83 | | | | | 020-1032 |
| NRV 22s [1]) | 1 1/8 | – | 0.04 | 0.58 | 8.5 | 9.83 | | | | | 020-1060 |
| | – | 28 | 0.04 | 0.58 | 8.5 | 9.83 | | | | | 020-1055 |
| NRVH 22s [1]) | 1 1/8 | – | 0.30 | 4.35 | 8.5 | 9.83 | | | | | 020-1072 |
| | – | 28 | 0.30 | 4.35 | 8.5 | 9.83 | | | | | 020-1067 |
| NRV 28s | 1 1/8 | – | 0.04 | 0.58 | 16.5 | 19.07 | | | | | 020-1021 |
| | – | 28 | 0.04 | 0.58 | 16.5 | 19.07 | | | | | 020-1025 |
| NRVH 28s | 1 1/8 | – | 0.30 | 4.35 | 16.5 | 19.07 | | | | | 020-1029 |
| | – | 28 | 0.30 | 4.35 | 16.5 | 19.07 | | | | | 020-1033 |
| NRV 28s [1]) | 1 3/8 | 35 | 0.04 | 0.58 | 16.5 | 19.07 | | | No | | 020-1056 |
| NRVH 28s [1]) | 1 3/8 | 35 | 0.30 | 4.35 | 16.5 | 19.07 | | | | | 020-1068 |
| NRV 35s | 1 3/8 | 35 | 0.04 | 0.58 | 29 | 33.52 | | | | | 020-1026 |
| NRVH 35s | 1 3/8 | 35 | 0.30 | 4.35 | 29 | 33.52 | | | | | 020-1034 |
| NRV 35s [1]) | 1 5/8 | – | 0.04 | 0.58 | 29 | 33.52 | | | | I | 020-1061 |
| | – | 42 | 0.04 | 0.58 | 29 | 33.52 | | | | | 020-1027 |
| NRVH 35s [1]) | 1 5/8 | – | 0.30 | 4.35 | 29 | 33.52 | | | | | 020-1073 |
| | – | 42 | 0.30 | 4.35 | 29 | 33.52 | | | | | 020-1035 |

### Angleway Solder ODF Version, PS = 49 bar [6])

| Valve type | Connection [in] | Connection [mm] | Min. OPD Δp [2]) [bar] | Min. OPD Δp [2]) [psi] | $K_v$ value [3]) [m³/h] | $C_v$ value [3]) [gal/min] | Max. working pressure: PS/MWP | Media temperature range | For flammable refrigerant [4]) | PED category | Code no. Multi pack |
|---|---|---|---|---|---|---|---|---|---|---|---|
| NRV 22s E | 7/8 | 22 | 0.04 | 0.58 | 8.5 | 9.83 | 49 bar / 710 psig | -50 °C - 155 °C / -58 °F - 311 °F | Yes | Article 4, Paragraph 3 | 020-3020 |
| NRVH 22s E | 7/8 | 22 | 0.30 | 4.35 | 8.5 | 9.83 | | | | | 020-3032 |
| NRV 22s E [1]) | 1 1/8 | – | 0.04 | 0.58 | 8.5 | 9.83 | | | | | 020-3060 |
| | – | 28 | 0.04 | 0.58 | 8.5 | 9.83 | | | | | 020-3055 |
| NRVH 22s E [1]) | 1 1/8 | – | 0.30 | 4.35 | 8.5 | 9.83 | | | | | 020-3072 |
| | – | 28 | 0.30 | 4.35 | 8.5 | 9.83 | | | | | 020-3067 |
| NRV 28s E | 1 1/8 | – | 0.04 | 0.58 | 16.5 | 19.07 | | | | | 020-3021 |
| | – | 28 | 0.04 | 0.58 | 16.5 | 19.07 | | | | | 020-3025 |
| NRVH 28s E | 1 1/8 | – | 0.30 | 4.35 | 16.5 | 19.07 | | | | | 020-3029 |
| | – | 28 | 0.30 | 4.35 | 16.5 | 19.07 | | | | | 020-3039 |
| NRV 28s E [1]) | 1 3/8 | 35 | 0.04 | 0.58 | 16.5 | 19.07 | | | | II | 020-3056 |
| NRVH 28s E [1]) | 1 3/8 | 35 | 0.30 | 4.35 | 16.5 | 19.07 | | | | | 020-3068 |
| NRV 35s E | 1 3/8 | 35 | 0.04 | 0.58 | 29 | 33.52 | | | | | 020-3026 |
| NRVH 35s E | 1 3/8 | 35 | 0.30 | 4.35 | 29 | 33.52 | | | | | 020-3036 |
| NRV 35s E [1]) | 1 5/8 | – | 0.04 | 0.58 | 29 | 33.52 | | | | | 020-3061 |
| | – | 42 | 0.04 | 0.58 | 29 | 33.52 | | | | | 020-3027 |
| NRVH 35s E [1]) | 1 5/8 | – | 0.30 | 4.35 | 29 | 33.52 | | | | | 020-3073 |
| | – | 42 | 0.30 | 4.35 | 29 | 33.52 | | | | | 020-3035 |

*[1]) Oversize connections*
*[2]) Δp =Minimum Opening Pressure Differential*
*[3]) The $K_v$ / $C_v$ value is the flow of water in [m³/h – gal/min] at a pressure drop across valve of 1 bar/14.5 psig*
*ρ = 1000 kg/m³ - 2205 lbs/G*
*[4]) Please refer to the Danfoss refrigerant list for flammable refrigerants, for other flammable refrigerants please contact Danfoss.*
*[5]) For the code selection of Industrial pack version please contact Danfoss.*
*[6]) The 49bar NRV angleway version can be only used with flammable refrigerants.*
*The 49bar NRV angleway version which belong to PED category II can be only used with R32, R452B, R454A, R454B, R454C, R455A, R516A, R1234yf.*

## Ordering (continued)

### Straightway Solder ODF Version

| Valve type | Connection | | Min. OPD Δp [2]) | | $K_v$ value [3]) | $C_v$ value [3]) | Max. working pressure: PS/MWP | Media temperature range | For flammable refrigerant [4]) | PED category | Code no. Multi pack [5]) |
|---|---|---|---|---|---|---|---|---|---|---|---|
| | [in] | [mm] | [bar] | [psi] | [m³/h] | [gal/min] | | | | | |
| NRV 6s v2 | 1/4 | – | 0.04 | 0.58 | 0.67 | 0.77 | 49 bar / 710 psig | -50 °C - 155°C / -58 °F - 311 °F | Yes | Article 4, Paragraph 3 | 020B1010 |
| | – | 6 | 0.04 | 0.58 | 0.67 | 0.77 | | | | | 020B1014 |
| NRV 6s v2 [1]) | 3/8 | – | 0.04 | 0.58 | 0.67 | 0.77 | | | | | 020B1057 |
| | – | 10 | 0.04 | 0.58 | 0.67 | 0.77 | | | | | 020B1050 |
| NRVH 6s v2 [1]) | 3/8 | – | 0.20 | 2.90 | 0.67 | 0.77 | | | | | 020B1069 |
| | – | 10 | 0.20 | 2.90 | 0.67 | 0.77 | | | | | 020B1062 |
| NRV 10s v2 | 3/8 | – | 0.04 | 0.58 | 1.64 | 1.90 | | | | | 020B1011 |
| | – | 10 | 0.04 | 0.58 | 1.64 | 1.90 | | | | | 020B1015 |
| NRVH 10s v2 | 3/8 | – | 0.20 | 2.90 | 1.64 | 1.90 | | | | | 020B1046 |
| | – | 10 | 0.20 | 2.90 | 1.64 | 1.90 | | | | | 020B1036 |
| NRV 10s v2 [1]) | 1/2 | – | 0.04 | 0.58 | 1.64 | 1.90 | | | | | 020B1058 |
| | – | 12 | 0.04 | 0.58 | 1.64 | 1.90 | | | | | 020B1051 |
| NRVH 10s v2 [1]) | 1/2 | – | 0.20 | 2.90 | 1.64 | 1.90 | | | | | 020B1070 |
| | – | 12 | 0.20 | 2.90 | 1.64 | 1.90 | | | | | 020B1063 |
| NRV 12s v2 | 1/2 | – | 0.02 | 0.29 | 2.50 | 2.89 | | | | | 020B1012 |
| | – | 12 | 0.02 | 0.29 | 2.50 | 2.89 | | | | | 020B1016 |
| NRVH 12s v2 | 1/2 | – | 0.20 | 2.90 | 2.50 | 2.89 | | | | | 020B1039 |
| | – | 12 | 0.20 | 2.90 | 2.50 | 2.89 | | | | | 020B1037 |
| NRV 12s v2 [1]) | 5/8 | 16 | 0.02 | 0.29 | 2.50 | 2.89 | | | | | 020B1052 |
| NRVH 12s v2 [1]) | 5/8 | 16 | 0.20 | 2.90 | 2.50 | 2.89 | | | | | 020B1064 |
| NRV 16s v2 | 5/8 | 16 | 0.02 | 0.29 | 4.00 | 4.62 | | | | | 020B1018 |
| NRVH 16s v2 | 5/8 | 16 | 0.20 | 2.90 | 4.00 | 4.62 | | | | | 020B1038 |
| NRV 16s v2 [1]) | – | 18 | 0.02 | 0.29 | 4.00 | 4.62 | | | | | 020B1053 |
| NRVH 16s v2 [1]) | – | 18 | 0.20 | 2.90 | 4.00 | 4.62 | | | | | 020B1065 |
| NRV 16s v2 [1]) | 3/4 | 19 | 0.02 | 0.29 | 4.00 | 4.62 | | | | | 020B1059 |
| NRVH 16s v2 [1]) | 3/4 | 19 | 0.20 | 2.90 | 4.00 | 4.62 | | | | | 020B1071 |
| NRV 19s v2 | – | 18 | 0.02 | 0.29 | 6.50 | 7.51 | | | | | 020B1017 |
| NRVH 19s v2 | – | 18 | 0.14 | 2.03 | 6.50 | 7.51 | | | | | 020B1008 |
| NRV 19s v2 | 3/4 | 19 | 0.02 | 0.29 | 6.50 | 7.51 | | | | | 020B1019 |
| NRVH 19s v2 | 3/4 | 19 | 0.14 | 2.03 | 6.50 | 7.51 | | | | | 020B1023 |
| NRV 19s v2 [1]) | 7/8 | 22 | 0.02 | 0.29 | 6.50 | 7.51 | | | | | 020B1054 |
| NRVH 19s v2 [1]) | 7/8 | 22 | 0.14 | 2.03 | 6.50 | 7.51 | | | | | 020B1066 |

*[1]) Oversize connections*
*[2]) Δp = Minimum Opening Pressure Differential*
*[3]) The $K_v$ / $C_v$ value is the flow of water in [m³/h – gal/min] at a pressure drop across valve of 1 bar/14.5 psig*
*ρ = 1000 kg/m³ - 2205 lbs/G*
*[4]) Please refer to the Danfoss refrigerant list for flammable refrigerants, for other flammable refrigerants please contact Danfoss*
*[5]) For the code selection of Industrial pack version please contact Danfoss.*

## Capacity

SI units

**Liquid capacity (kW)**

| Type | Liquid capacity [1]) at pressure drop across valve Δp [bar] NRV | | | |
|---|---|---|---|---|
| | 0.05 | 0.07 | 0.14 | 0.2 |
| **R134a** | | | | |
| NRV 6 v2 | 1.4 | 4.6 | 11.0 | 14.4 |
| NRV 10 v2 | 8.3 | 18.2 | 29.5 | 35.2 |
| NRV 12 v2 | 26.9 | 31.8 | 44.9 | 53.7 |
| NRV 16 v2 | 38.8 | 50.8 | 71.9 | 85.9 |
| NRV 19 v2 | 69.8 | 82.6 | 116.9 | 139.7 |
| NRV 22 | 91.6 | 108.4 | 153.3 | 183.3 |
| NRV 28 | 177.9 | 210.5 | 297.7 | 355.8 |
| NRV 35 | 312.7 | 369.9 | 523.2 | 625.3 |
| **R22** | | | | |
| NRV 6 v2 | 1.5 | 4.9 | 11.8 | 15.5 |
| NRV 10 v2 | 9.0 | 19.7 | 31.8 | 38.0 |
| NRV 12 v2 | 28.9 | 34.2 | 48.4 | 57.9 |
| NRV 16 v2 | 41.8 | 54.8 | 77.5 | 92.6 |
| NRV 19 v2 | 75.2 | 89.0 | 125.9 | 150.5 |
| NRV 22 | 98.4 | 116.4 | 164.6 | 196.8 |
| NRV 28 | 191.0 | 226.0 | 319.6 | 382.0 |
| NRV 35 | 335.7 | 397.2 | 561.7 | 671.4 |
| **R404A** | | | | |
| NRV 6 v2 | 1.0 | 3.4 | 8.0 | 10.5 |
| NRV 10 v2 | 6.1 | 13.4 | 21.6 | 25.8 |
| NRV 12 v2 | 19.7 | 23.3 | 32.9 | 39.3 |
| NRV 16 v2 | 28.4 | 37.2 | 52.6 | 62.9 |
| NRV 19 v2 | 51.1 | 60.5 | 85.5 | 102.2 |
| NRV 22 | 67.0 | 79.3 | 112.2 | 134.1 |
| NRV 28 | 130.1 | 154.0 | 217.8 | 260.3 |
| NRV 35 | 228.7 | 270.6 | 382.7 | 457.5 |
| **R410A** | | | | |
| NRV 6 v2 | 1.5 | 4.9 | 11.6 | 15.3 |
| NRV 10 v2 | 8.8 | 19.3 | 31.2 | 37.3 |
| NRV 12 v2 | 28.5 | 33.7 | 47.6 | 56.9 |
| NRV 16 v2 | 41.1 | 53.9 | 76.2 | 91.1 |
| NRV 19 v2 | 74.0 | 87.6 | 123.8 | 148.0 |
| NRV 22 | 96.7 | 114.4 | 161.8 | 193.4 |
| NRV 28 | 187.7 | 222.1 | 314.1 | 375.4 |
| NRV 35 | 329.9 | 390.3 | 552.0 | 659.7 |

**Suction vapour capacity in [kW]**

| Pressure drop across valve Δp [bar] | Suction vapour capacity [1]) at evaporating temperature $t_e$ [°C] | | | |
|---|---|---|---|---|
| | -30 | -10 | 0 | 5 |
| **R134a** | | | | |
| 0.07 | 0.22 | 0.39 | 0.50 | 0.56 |
| 0.07 | 0.91 | 1.59 | 2.01 | 2.24 |
| 0.07 | 1.68 | 2.83 | 3.55 | 3.95 |
| 0.07 | 2.68 | 4.53 | 5.68 | 6.32 |
| 0.07 | 4.36 | 7.37 | 9.24 | 10.27 |
| 0.07 | 5.73 | 9.67 | 12.11 | 13.47 |
| 0.07 | 11.13 | 18.77 | 23.51 | 26.14 |
| 0.07 | 19.56 | 32.99 | 41.33 | 45.94 |
| **R22** | | | | |
| 0.07 | 0.34 | 0.54 | 0.66 | 0.72 |
| 0.07 | 1.39 | 2.18 | 2.64 | 2.89 |
| 0.07 | 2.50 | 3.84 | 4.64 | 5.07 |
| 0.07 | 3.99 | 6.14 | 7.42 | 8.11 |
| 0.07 | 6.49 | 9.98 | 12.05 | 13.17 |
| 0.07 | 8.48 | 13.05 | 15.76 | 17.23 |
| 0.07 | 16.47 | 25.33 | 30.59 | 33.44 |
| 0.07 | 28.94 | 44.52 | 53.77 | 58.78 |
| **R404A** | | | | |
| 0.07 | 0.29 | 0.47 | 0.59 | 0.65 |
| 0.07 | 1.17 | 1.90 | 2.35 | 2.59 |
| 0.07 | 2.09 | 3.34 | 4.12 | 4.54 |
| 0.07 | 3.34 | 5.35 | 6.59 | 7.27 |
| 0.07 | 5.43 | 8.70 | 10.71 | 11.81 |
| 0.07 | 7.09 | 11.37 | 14.01 | 15.46 |
| 0.07 | 13.77 | 22.07 | 27.19 | 30.02 |
| 0.07 | 24.20 | 38.79 | 47.79 | 52.76 |
| **R410A** | | | | |
| 0.07 | 0.44 | 0.68 | 0.83 | 0.90 |
| 0.07 | 1.78 | 2.74 | 3.30 | 3.61 |
| 0.07 | 3.16 | 4.80 | 5.78 | 6.32 |
| 0.07 | 5.05 | 7.69 | 9.26 | 10.11 |
| 0.07 | 8.21 | 12.49 | 15.04 | 16.42 |
| 0.07 | 10.72 | 16.35 | 19.70 | 21.52 |
| 0.07 | 20.81 | 31.73 | 38.24 | 41.77 |
| 0.07 | 36.57 | 55.77 | 67.21 | 73.42 |

**Hot gas capacity in [kW]**

| Type | Hot gas capacity [1]) at pressure drop across valve Δp [bar] NRV | | | |
|---|---|---|---|---|
| | 0.05 | 0.07 | 0.14 | 0.2 |
| **R134a** | | | | |
| NRV 6 v2 | 0.2 | 0.7 | 1.7 | 2.2 |
| NRV 10 v2 | 1.3 | 2.8 | 4.5 | 5.4 |
| NRV 12 v2 | 4.2 | 4.9 | 6.9 | 8.2 |
| NRV 16 v2 | 6.0 | 7.9 | 11.1 | 13.2 |
| NRV 19 v2 | 10.8 | 12.8 | 18.0 | 21.4 |
| NRV 22 | 14.2 | 16.8 | 23.6 | 28.1 |
| NRV 28 | 27.6 | 32.6 | 45.9 | 54.6 |
| NRV 35 | 48.6 | 57.4 | 80.7 | 95.9 |
| **R22** | | | | |
| NRV 6 v2 | 0.3 | 0.9 | 2.1 | 2.8 |
| NRV 10 v2 | 1.6 | 3.5 | 5.7 | 6.8 |
| NRV 12 v2 | 5.2 | 6.2 | 8.7 | 10.4 |
| NRV 16 v2 | 7.5 | 9.9 | 14.0 | 16.6 |
| NRV 19 v2 | 13.6 | 16.1 | 22.7 | 27.0 |
| NRV 22 | 17.8 | 21.0 | 29.6 | 35.3 |
| NRV 28 | 34.5 | 40.8 | 57.5 | 68.6 |
| NRV 35 | 60.7 | 71.8 | 101.1 | 120.5 |
| **R404A** | | | | |
| NRV 6 v2 | 0.2 | 0.8 | 1.8 | 2.4 |
| NRV 10 v2 | 1.4 | 3.1 | 4.9 | 5.9 |
| NRV 12 v2 | 4.5 | 5.3 | 7.5 | 9.0 |
| NRV 16 v2 | 6.5 | 8.5 | 12.0 | 14.3 |
| NRV 19 v2 | 11.7 | 13.9 | 19.6 | 23.3 |
| NRV 22 | 15.4 | 18.2 | 25.6 | 30.6 |
| NRV 28 | 29.9 | 35.3 | 49.8 | 59.3 |
| NRV 35 | 52.5 | 62.0 | 87.4 | 104.2 |
| **R410A** | | | | |
| NRV 6 v2 | 0.3 | 1.1 | 2.6 | 3.4 |
| NRV 10 v2 | 2.0 | 4.4 | 7.0 | 8.4 |
| NRV 12 v2 | 6.4 | 7.6 | 10.7 | 12.8 |
| NRV 16 v2 | 9.3 | 12.2 | 17.2 | 20.5 |
| NRV 19 v2 | 16.7 | 19.8 | 27.9 | 33.3 |
| NRV 22 | 21.9 | 25.9 | 36.5 | 43.6 |
| NRV 28 | 42.5 | 50.2 | 70.9 | 84.6 |
| NRV 35 | 74.7 | 88.3 | 124.6 | 148.6 |

**Hot gas capacity in [kW]**

| Type | Hot gas capacity1) at pressure drop across valve Δp [bar] NRVH | | | |
|---|---|---|---|---|
| | 0.2 | 0.25 | 0.3 | 0.35 |
| **R134a** | | | | |
| NRVH 6 v2 | 0.1 | 0.3 | 1.4 | 2.0 |
| NRVH 10 v2 | 0.0 | 2.9 | 5.0 | 6.5 |
| NRVH 12 v2 | 5.6 | 9.2 | 10.0 | 10.8 |
| NRVH 16 v2 | 1.9 | 10.5 | 13.8 | 15.9 |
| NRVH 19 v2 | 16.0 | 23.8 | 26.0 | 28.0 |
| NRVH 22 | - | - | 34.1 | 36.7 |
| NRVH 28 | - | - | 66.3 | 71.3 |
| NRVH 35 | - | - | 116.5 | 125.3 |
| **R22** | | | | |
| NRVH 6 v2 | 0.1 | 0.4 | 1.8 | 2.6 |
| NRVH 10 v2 | 0.0 | 3.6 | 6.3 | 8.2 |
| NRVH 12 v2 | 7.0 | 11.6 | 12.7 | 13.6 |
| NRVH 16 v2 | 2.5 | 13.4 | 17.6 | 20.2 |
| NRVH 19 v2 | 20.2 | 30.1 | 32.9 | 35.5 |
| NRVH 22 | - | - | 43.0 | 46.4 |
| NRVH 28 | - | - | 83.5 | 90.0 |
| NRVH 35 | - | - | 146.8 | 158.2 |
| **R404A** | | | | |
| NRVH 6 v2 | 0.1 | 0.4 | 1.6 | 2.3 |
| NRVH 10 v2 | 0.0 | 3.1 | 5.4 | 7.1 |
| NRVH 12 v2 | 6.1 | 10.0 | 10.9 | 11.8 |
| NRVH 16 v2 | 2.1 | 11.6 | 15.2 | 17.5 |
| NRVH 19 v2 | 17.5 | 26.0 | 28.4 | 30.6 |
| NRVH 22 | - | - | 37.2 | 40.1 |
| NRVH 28 | - | - | 72.3 | 77.9 |
| NRVH 35 | - | - | 127.1 | 137.0 |
| **R410A** | | | | |
| NRVH 6 v2 | 0.2 | 0.5 | 2.3 | 3.2 |
| NRVH 10 v2 | 0.0 | 4.5 | 7.8 | 10.1 |
| NRVH 12 v2 | 8.7 | 14.3 | 15.6 | 16.8 |
| NRVH 16 v2 | 3.1 | 16.6 | 21.8 | 25.1 |
| NRVH 19 v2 | 25.0 | 37.1 | 40.6 | 43.8 |
| NRVH 22 | - | - | 53.2 | 57.3 |
| NRVH 28 | - | - | 103.2 | 111.3 |
| NRVH 35 | - | - | 181.4 | 195.7 |

*1) Rated capacities are based on:*
*-Evaporating temperature, $t_e$ = -10 °C.*
*-Condensing temperature, $t_c$ = 30 °C.*
*-Subcooling $t_{sub}$ = 5 K.*
*-Delta superheat $t_{sh}$ = 0 K.*
*-Discharge temperature, $t_d$ = 80 °C ahead of the valve.*
*The table values refer to the evaporator capacity.*

### Correction factors

When selecting the evaporator capacity is to be multiplied by a correction factor depending on the liquid temperature tl ahead of the valve/the evaporator. The corrected capacity can then be found from the table.

***System capacity·Correction factor=Table capacity***

### Correction factors for liquid temperature $t_l$

| $t_l$ [°C] | -10 | 0 | 10 | 15 | 20 | 25 | 30 | 35 | 40 | 45 | 50 |
|---|---|---|---|---|---|---|---|---|---|---|---|
| **R134a** | 0.73 | 0.79 | 0.86 | 0.90 | 0.95 | 1.00 | 1.06 | 1.12 | 1.19 | 1.27 | 1.37 |
| **R22** | 0.76 | 0.82 | 0.88 | 0.92 | 0.96 | 1.00 | 1.05 | 1.10 | 1.16 | 1.22 | 1.30 |
| **R404A** | 0.67 | 0.74 | 0.82 | 0.87 | 0.93 | 1.00 | 1.08 | 1.17 | 1.29 | 1.43 | 1.61 |
| **R410A** | 0.72 | 0.78 | 0.85 | 0.90 | 0.94 | 1.00 | 1.06 | 1.14 | 1.22 | 1.33 | 1.46 |

## Capacity

SI units

**Liquid capacity (kW)**

| Type | Liquid capacity [1] at pressure drop across valve Δp [bar] NRV | | | |
|---|---|---|---|---|
| | 0.05 | 0.07 | 0.14 | 0.2 |
| **R407A** | | | | |
| NRV 6 v2 | 1.4 | 4.4 | 10.5 | 13.8 |
| NRV 10 v2 | 7.9 | 17.4 | 28.2 | 33.7 |
| NRV 12 v2 | 25.7 | 30.4 | 42.9 | 51.3 |
| NRV 16 v2 | 37.0 | 48.6 | 68.7 | 82.1 |
| NRV 19 v2 | 66.7 | 78.9 | 111.6 | 133.4 |
| NRV 22 | 87.5 | 103.5 | 146.4 | 175.0 |
| NRV 28 | 169.9 | 201.0 | 284.2 | 339.7 |
| NRV 35 | 298.5 | 353.2 | 499.5 | 597.1 |
| **R407C** | | | | |
| NRV 6 v2 | 1.5 | 4.7 | 11.3 | 14.8 |
| NRV 10 v2 | 8.6 | 18.8 | 30.4 | 36.3 |
| NRV 12 v2 | 27.7 | 32.8 | 46.3 | 55.4 |
| NRV 16 v2 | 40.0 | 52.4 | 74.1 | 88.6 |
| NRV 19 v2 | 72.0 | 85.2 | 120.5 | 144.0 |
| NRV 22 | 94.4 | 111.7 | 157.9 | 188.8 |
| NRV 28 | 183.2 | 216.8 | 306.6 | 366.5 |
| NRV 35 | 322.0 | 381.0 | 538.9 | 644.1 |
| **R407F** | | | | |
| NRV 6 v2 | 1.5 | 4.8 | 11.5 | 15.1 |
| NRV 10 v2 | 8.7 | 19.2 | 31.0 | 37.0 |
| NRV 12 v2 | 28.2 | 33.4 | 47.2 | 56.4 |
| NRV 16 v2 | 40.7 | 53.4 | 75.5 | 90.2 |
| NRV 19 v2 | 73.3 | 86.8 | 122.7 | 146.6 |
| NRV 22 | 95.9 | 113.4 | 160.4 | 191.8 |
| NRV 28 | 186.1 | 220.2 | 311.4 | 372.2 |
| NRV 35 | 327.1 | 387.1 | 547.4 | 654.3 |
| **R407H** | | | | |
| NRV 6 v2 | 1.6 | 5.1 | 12.3 | 16.2 |
| NRV 10 v2 | 9.3 | 20.5 | 33.1 | 39.6 |
| NRV 12 v2 | 30.2 | 35.7 | 50.5 | 60.3 |
| NRV 16 v2 | 43.5 | 57.1 | 80.7 | 96.5 |
| NRV 19 v2 | 78.4 | 92.8 | 131.2 | 156.8 |
| NRV 22 | 102.5 | 121.3 | 171.6 | 205.1 |
| NRV 28 | 199.0 | 235.5 | 333.1 | 398.1 |
| NRV 35 | 349.8 | 413.9 | 585.4 | 699.7 |

**Suction vapour capacity in [kW]**

| Pressure drop across valve Δp [bar] | Suction vapour capacity [1] at evaporating temperature $t_e$ [°C] | | | |
|---|---|---|---|---|
| | -30 | -10 | 0 | 5 |
| **R407A** | | | | |
| 0.07 | 0.30 | 0.50 | 0.62 | 0.68 |
| 0.07 | 1.21 | 2.00 | 2.47 | 2.74 |
| 0.07 | 2.17 | 3.52 | 4.35 | 4.80 |
| 0.07 | 3.48 | 5.63 | 6.95 | 7.68 |
| 0.07 | 5.65 | 9.15 | 11.30 | 12.48 |
| 0.07 | 7.40 | 12.00 | 14.82 | 16.38 |
| 0.07 | 14.37 | 23.29 | 28.77 | 31.79 |
| 0.07 | 25.25 | 40.94 | 50.57 | 55.87 |
| **R407C** | | | | |
| 0.07 | 0.30 | 0.50 | 0.62 | 0.69 |
| 0.07 | 1.22 | 2.02 | 2.50 | 2.77 |
| 0.07 | 2.20 | 3.56 | 4.40 | 4.86 |
| 0.07 | 3.52 | 5.70 | 7.04 | 7.77 |
| 0.07 | 5.72 | 9.27 | 11.44 | 12.63 |
| 0.07 | 7.48 | 12.14 | 14.99 | 16.56 |
| 0.07 | 14.52 | 23.56 | 29.10 | 32.14 |
| 0.07 | 25.52 | 41.41 | 51.14 | 56.49 |
| **R407F** | | | | |
| 0.07 | 0.33 | 0.54 | 0.67 | 0.74 |
| 0.07 | 1.34 | 2.18 | 2.68 | 2.96 |
| 0.07 | 2.39 | 3.83 | 4.71 | 5.19 |
| 0.07 | 3.83 | 6.14 | 7.54 | 8.31 |
| 0.07 | 6.22 | 9.97 | 12.25 | 13.50 |
| 0.07 | 8.14 | 13.04 | 16.02 | 17.66 |
| 0.07 | 15.80 | 25.31 | 31.10 | 34.27 |
| 0.07 | 27.77 | 44.48 | 54.66 | 60.24 |
| **R407H** | | | | |
| 0.07 | 0.33 | 0.54 | 0.67 | 0.74 |
| 0.07 | 1.33 | 2.18 | 2.69 | 2.97 |
| 0.07 | 2.39 | 3.85 | 4.73 | 5.21 |
| 0.07 | 3.83 | 6.15 | 7.56 | 8.34 |
| 0.07 | 6.23 | 10.00 | 12.29 | 13.55 |
| 0.07 | 8.14 | 13.07 | 16.07 | 17.71 |
| 0.07 | 15.80 | 25.38 | 31.20 | 34.39 |
| 0.07 | 27.78 | 44.60 | 54.83 | 60.44 |

**Hot gas capacity in [kW]**

| Type | Hot gas capacity [1] at pressure drop across valve Δp [bar] NRV | | | |
|---|---|---|---|---|
| | 0.05 | 0.07 | 0.14 | 0.2 |
| **R407A** | | | | |
| NRV 6 v2 | 0.3 | 0.9 | 2.2 | 2.9 |
| NRV 10 v2 | 1.7 | 3.6 | 5.9 | 7.0 |
| NRV 12 v2 | 5.4 | 6.3 | 8.9 | 10.6 |
| NRV 16 v2 | 7.7 | 10.1 | 14.3 | 17.0 |
| NRV 19 v2 | 13.9 | 16.5 | 23.2 | 27.7 |
| NRV 22 | 18.3 | 21.6 | 30.5 | 36.4 |
| NRV 28 | 35.5 | 42.0 | 59.2 | 70.6 |
| NRV 35 | 62.5 | 73.9 | 104.1 | 124.1 |
| **R407C** | | | | |
| NRV 6 v2 | 0.3 | 0.9 | 2.2 | 2.9 |
| NRV 10 v2 | 1.7 | 3.7 | 6.0 | 7.2 |
| NRV 12 v2 | 5.5 | 6.5 | 9.2 | 11.0 |
| NRV 16 v2 | 8.0 | 10.5 | 14.7 | 17.6 |
| NRV 19 v2 | 14.4 | 17.0 | 23.9 | 28.5 |
| NRV 22 | 18.9 | 22.3 | 31.4 | 37.4 |
| NRV 28 | 36.6 | 43.3 | 61.0 | 72.7 |
| NRV 35 | 64.3 | 76.0 | 107.2 | 127.8 |
| **R407F** | | | | |
| NRV 6 v2 | 0.3 | 1.0 | 2.4 | 3.1 |
| NRV 10 v2 | 1.8 | 3.9 | 6.4 | 7.6 |
| NRV 12 v2 | 5.8 | 6.9 | 9.7 | 11.6 |
| NRV 16 v2 | 8.4 | 11.0 | 15.6 | 18.6 |
| NRV 19 v2 | 15.2 | 17.9 | 25.3 | 30.2 |
| NRV 22 | 19.8 | 23.5 | 33.1 | 39.4 |
| NRV 28 | 38.5 | 45.5 | 64.2 | 76.6 |
| NRV 35 | 67.7 | 80.0 | 112.9 | 134.6 |
| **R407H** | | | | |
| NRV 6 v2 | 0.3 | 1.0 | 2.4 | 3.2 |
| NRV 10 v2 | 1.8 | 4.0 | 6.5 | 7.8 |
| NRV 12 v2 | 6.0 | 7.0 | 9.9 | 11.8 |
| NRV 16 v2 | 8.6 | 11.3 | 15.9 | 18.9 |
| NRV 19 v2 | 15.5 | 18.3 | 25.8 | 30.8 |
| NRV 22 | 20.3 | 24.0 | 33.8 | 40.3 |
| NRV 28 | 39.3 | 46.5 | 65.6 | 78.2 |
| NRV 35 | 69.1 | 81.7 | 115.2 | 137.4 |

**Hot gas capacity in [kW]**

| Type | Hot gas capacity [1] at pressure drop across valve Δp [bar] NRVH | | | |
|---|---|---|---|---|
| | 0.2 | 0.25 | 0.3 | 0.35 |
| **RR407A** | | | | |
| NRVH 6 v2 | 0.2 | 0.4 | 1.9 | 2.7 |
| NRVH 10 v2 | 0.0 | 3.7 | 6.5 | 8.4 |
| NRVH 12 v2 | 7.2 | 11.9 | 13.0 | 14.0 |
| NRVH 16 v2 | 2.5 | 13.7 | 18.1 | 20.8 |
| NRVH 19 v2 | 20.8 | 30.9 | 33.8 | 36.4 |
| NRVH 22 | - | - | 44.4 | 47.8 |
| NRVH 28 | - | - | 86.1 | 92.8 |
| NRVH 35 | - | - | 151.3 | 163.1 |
| **R407C** | | | | |
| NRVH 6 v2 | 0.2 | 0.5 | 1.9 | 2.8 |
| NRVH 10 v2 | 0.0 | 3.8 | 6.7 | 8.7 |
| NRVH 12 v2 | 7.4 | 12.2 | 13.4 | 14.4 |
| NRVH 16 v2 | 2.6 | 14.1 | 18.6 | 21.4 |
| NRVH 19 v2 | 21.4 | 31.8 | 34.8 | 37.5 |
| NRVH 22 | - | - | 45.6 | 49.2 |
| NRVH 28 | - | - | 88.6 | 95.5 |
| NRVH 35 | - | - | 155.7 | 167.8 |
| **R407F** | | | | |
| NRVH 6 v2 | 0.2 | 0.5 | 2.0 | 2.9 |
| NRVH 10 v2 | 0.0 | 4.1 | 7.0 | 9.2 |
| NRVH 12 v2 | 7.9 | 12.9 | 14.1 | 15.2 |
| NRVH 16 v2 | 2.8 | 15.0 | 19.7 | 22.7 |
| NRVH 19 v2 | 22.6 | 33.6 | 36.8 | 39.6 |
| NRVH 22 | - | - | 48.1 | 51.9 |
| NRVH 28 | - | - | 93.4 | 100.7 |
| NRVH 35 | - | - | 164.1 | 176.9 |
| **R407H** | | | | |
| NRVH 6 v2 | 0.2 | 0.5 | 2.1 | 3.0 |
| NRVH 10 v2 | 0.0 | 4.2 | 7.2 | 9.4 |
| NRVH 12 v2 | 8.0 | 13.2 | 14.4 | 15.6 |
| NRVH 16 v2 | 2.8 | 15.3 | 20.1 | 23.1 |
| NRVH 19 v2 | 23.1 | 34.3 | 37.5 | 40.5 |
| NRVH 22 | - | - | 49.1 | 52.9 |
| NRVH 28 | - | - | 95.3 | 102.7 |
| NRVH 35 | - | - | 167.5 | 180.5 |

*1) Rated capacities are based on:*
*-Evaporating temperature, $t_e$ = -10 °C.*
*-Condensing temperature, $t_c$ = 30 °C.*
*-Subcooling $t_{sub}$ = 5 K.*
*-Delta superheat $t_{sh}$ = 0 K.*
*-Discharge temperature, $t_d$ = 80 °C ahead of the valve.*
*The table values refer to the evaporator capacity.*

### Correction factors

When selecting the evaporator capacity is to be multiplied by a correction factor depending on the liquid temperature tl ahead of the valve/the evaporator. The corrected capacity can then be found from the table.

***System capacity·Correction factor=Table capacity***

### Correction factors for liquid temperature $t_l$

| $t_l$ [°C] | -10 | 0 | 10 | 15 | 20 | 25 | 30 | 35 | 40 | 45 | 50 |
|---|---|---|---|---|---|---|---|---|---|---|---|
| **R407A** | 0.71 | 0.78 | 0.85 | 0.90 | 0.94 | 1.00 | 1.06 | 1.13 | 1.22 | 1.32 | 1.44 |
| **R407C** | 0.73 | 0.79 | 0.86 | 0.90 | 0.95 | 1.00 | 1.06 | 1.13 | 1.20 | 1.29 | 1.40 |
| **R407F** | 0.73 | 0.79 | 0.86 | 0.90 | 0.95 | 1.00 | 1.06 | 1.13 | 1.20 | 1.30 | 1.40 |
| **R407H** | 0.74 | 0.80 | 0.87 | 0.91 | 0.95 | 1.00 | 1.06 | 1.12 | 1.19 | 1.27 | 1.37 |

## Capacity

SI units

**Liquid capacity (kW)**

| Type | Liquid capacity [1]) at pressure drop across valve Δp [bar] NRV | | | |
|---|---|---|---|---|
| | 0.05 | 0.07 | 0.14 | 0.2 |
| **R448A** | | | | |
| NRV 6 v2 | 1.4 | 4.4 | 10.6 | 13.8 |
| NRV 10 v2 | 8.0 | 17.5 | 28.3 | 33.8 |
| NRV 12 v2 | 25.8 | 30.5 | 43.2 | 51.6 |
| NRV 16 v2 | 37.2 | 48.8 | 69.1 | 82.5 |
| NRV 19 v2 | 67.1 | 79.4 | 112.2 | 134.1 |
| NRV 22 | 87.7 | 103.8 | 146.7 | 175.4 |
| NRV 28 | 170.2 | 201.4 | 284.9 | 340.5 |
| NRV 35 | 299.2 | 354.0 | 500.7 | 598.4 |
| **R449A** | | | | |
| NRV 6 v2 | 1.3 | 4.3 | 10.4 | 13.7 |
| NRV 10 v2 | 7.9 | 17.3 | 28.0 | 33.4 |
| NRV 12 v2 | 25.5 | 30.1 | 42.6 | 51.0 |
| NRV 16 v2 | 36.8 | 48.2 | 68.2 | 81.5 |
| NRV 19 v2 | 66.3 | 78.4 | 110.9 | 132.5 |
| NRV 22 | 86.6 | 102.5 | 145.0 | 173.3 |
| NRV 28 | 168.2 | 199.0 | 281.4 | 336.4 |
| NRV 35 | 295.6 | 349.7 | 494.6 | 591.2 |
| **R449B** | | | | |
| NRV 6 v2 | 1.4 | 4.4 | 10.6 | 13.8 |
| NRV 10 v2 | 8.0 | 17.6 | 28.4 | 33.9 |
| NRV 12 v2 | 25.8 | 30.6 | 43.2 | 51.7 |
| NRV 16 v2 | 37.3 | 48.9 | 69.2 | 82.7 |
| NRV 19 v2 | 67.2 | 79.5 | 112.4 | 134.3 |
| NRV 22 | 87.8 | 103.9 | 147.0 | 175.7 |
| NRV 28 | 170.5 | 201.7 | 285.3 | 341.0 |
| NRV 35 | 299.7 | 354.6 | 501.5 | 599.4 |
| **R450A** | | | | |
| NRV 6 v2 | 1.3 | 4.3 | 10.2 | 13.4 |
| NRV 10 v2 | 7.7 | 16.9 | 27.3 | 32.7 |
| NRV 12 v2 | 24.9 | 29.5 | 41.7 | 49.8 |
| NRV 16 v2 | 35.9 | 47.2 | 66.7 | 79.7 |
| NRV 19 v2 | 64.8 | 76.6 | 108.4 | 129.5 |
| NRV 22 | 84.8 | 100.3 | 141.9 | 169.6 |
| NRV 28 | 164.6 | 194.8 | 275.5 | 329.2 |
| NRV 35 | 289.3 | 342.3 | 484.2 | 578.7 |

**Suction vapour capacity in [kW]**

| Pressure drop across valve Δp [bar] | Suction vapour capacity [1]) at evaporating temperature $t_e$ [°C] | | | |
|---|---|---|---|---|
| | -30 | -10 | 0 | 5 |
| **R448A** | | | | |
| 0.07 | 0.31 | 0.51 | 0.63 | 0.70 |
| 0.07 | 1.26 | 2.05 | 2.53 | 2.79 |
| 0.07 | 2.25 | 3.61 | 4.44 | 4.90 |
| 0.07 | 3.60 | 5.78 | 7.11 | 7.84 |
| 0.07 | 5.86 | 9.39 | 11.55 | 12.73 |
| 0.07 | 7.66 | 12.30 | 15.14 | 16.70 |
| 0.07 | 14.87 | 23.88 | 29.39 | 32.42 |
| 0.07 | 26.13 | 41.97 | 51.66 | 56.98 |
| **R449A** | | | | |
| 0.07 | 0.31 | 0.51 | 0.63 | 0.69 |
| 0.07 | 1.25 | 2.04 | 2.52 | 2.78 |
| 0.07 | 2.24 | 3.59 | 4.42 | 4.88 |
| 0.07 | 3.58 | 5.75 | 7.08 | 7.80 |
| 0.07 | 5.82 | 9.34 | 11.50 | 12.68 |
| 0.07 | 7.61 | 12.22 | 15.04 | 16.59 |
| 0.07 | 14.77 | 23.71 | 29.19 | 32.20 |
| 0.07 | 25.95 | 41.68 | 51.30 | 56.59 |
| **R449B** | | | | |
| 0.07 | 0.31 | 0.51 | 0.63 | 0.70 |
| 0.07 | 1.26 | 2.06 | 2.54 | 2.80 |
| 0.07 | 2.26 | 3.63 | 4.46 | 4.92 |
| 0.07 | 3.62 | 5.80 | 7.14 | 7.87 |
| 0.07 | 5.88 | 9.43 | 11.60 | 12.80 |
| 0.07 | 7.68 | 12.33 | 15.17 | 16.73 |
| 0.07 | 14.92 | 23.94 | 29.45 | 32.48 |
| 0.07 | 26.22 | 42.07 | 51.76 | 57.09 |
| **R450A** | | | | |
| 0.07 | 0.19 | 0.35 | 0.45 | 0.50 |
| 0.07 | 0.79 | 1.42 | 1.80 | 2.02 |
| 0.07 | 1.48 | 2.54 | 3.20 | 3.57 |
| 0.07 | 2.36 | 4.06 | 5.12 | 5.71 |
| 0.07 | 3.84 | 6.60 | 8.32 | 9.28 |
| 0.07 | 5.01 | 8.62 | 10.89 | 12.14 |
| 0.07 | 9.72 | 16.74 | 21.13 | 23.57 |
| 0.07 | 17.09 | 29.42 | 37.14 | 41.43 |

**Hot gas capacity in [kW]**

| Hot gas capacity [1]) at pressure drop across valve Δp [bar] NRV | | | |
|---|---|---|---|
| 0.05 | 0.07 | 0.14 | 0.2 |
| **R448A** | | | |
| 0.3 | 0.9 | 2.2 | 2.9 |
| 1.7 | 3.7 | 6.0 | 7.1 |
| 5.5 | 6.5 | 9.1 | 10.9 |
| 7.9 | 10.3 | 14.6 | 17.4 |
| 14.2 | 16.8 | 23.7 | 28.2 |
| 18.6 | 22.0 | 31.1 | 37.0 |
| 36.2 | 42.8 | 60.3 | 71.9 |
| 63.6 | 75.1 | 106.0 | 126.3 |
| **R449A** | | | |
| 0.3 | 0.9 | 2.2 | 2.9 |
| 1.7 | 3.7 | 5.9 | 7.0 |
| 5.4 | 6.4 | 9.0 | 10.7 |
| 7.8 | 10.2 | 14.4 | 17.2 |
| 14.0 | 16.6 | 23.4 | 27.9 |
| 18.4 | 21.7 | 30.6 | 36.5 |
| 35.6 | 42.1 | 59.4 | 70.8 |
| 62.7 | 74.1 | 104.4 | 124.5 |
| **R449B** | | | |
| 0.3 | 0.9 | 2.2 | 2.9 |
| 1.7 | 3.7 | 6.0 | 7.1 |
| 5.5 | 6.5 | 9.1 | 10.8 |
| 7.9 | 10.3 | 14.6 | 17.3 |
| 14.2 | 16.8 | 23.6 | 28.2 |
| 18.6 | 21.9 | 30.9 | 36.9 |
| 36.0 | 42.6 | 60.0 | 71.6 |
| 63.3 | 74.8 | 105.5 | 125.8 |
| **R450A** | | | |
| 0.2 | 0.6 | 1.5 | 2.0 |
| 1.2 | 2.6 | 4.1 | 4.9 |
| 3.8 | 4.5 | 6.3 | 7.5 |
| 5.5 | 7.2 | 10.1 | 12.0 |
| 9.9 | 11.7 | 16.4 | 19.5 |
| 12.9 | 15.3 | 21.5 | 25.5 |
| 25.1 | 29.6 | 41.6 | 49.5 |
| 44.1 | 52.1 | 73.2 | 87.0 |

**Hot gas capacity in [kW]**

| Type | Hot gas capacity [1]) at pressure drop across valve Δp [bar] NRVH | | | |
|---|---|---|---|---|
| | 0.2 | 0.25 | 0.3 | 0.35 |
| **R448A** | | | | |
| NRVH 6 v2 | 0.2 | 0.4 | 1.9 | 2.7 |
| NRVH 10 v2 | 0.0 | 3.8 | 6.6 | 8.6 |
| NRVH 12 v2 | 7.4 | 12.1 | 13.2 | 14.3 |
| NRVH 16 v2 | 2.6 | 14.0 | 18.4 | 21.2 |
| NRVH 19 v2 | 21.2 | 31.5 | 34.4 | 37.1 |
| NRVH 22 | - | - | 45.1 | 48.7 |
| NRVH 28 | - | - | 87.6 | 94.5 |
| NRVH 35 | - | - | 154.0 | 166.0 |
| **R449A** | | | | |
| NRVH 6 v2 | 0.2 | 0.4 | 1.9 | 2.7 |
| NRVH 10 v2 | 0.0 | 3.8 | 6.5 | 8.5 |
| NRVH 12 v2 | 7.3 | 12.0 | 13.1 | 14.1 |
| NRVH 16 v2 | 2.6 | 13.8 | 18.2 | 20.9 |
| NRVH 19 v2 | 20.9 | 31.1 | 34.0 | 36.7 |
| NRVH 22 | - | - | 44.5 | 47.9 |
| NRVH 28 | - | - | 86.4 | 93.1 |
| NRVH 35 | - | - | 151.8 | 163.6 |
| **R449B** | | | | |
| NRVH 6 v2 | 0.2 | 0.4 | 1.9 | 2.7 |
| NRVH 10 v2 | 0.0 | 3.8 | 6.6 | 8.6 |
| NRVH 12 v2 | 7.3 | 12.1 | 13.2 | 14.2 |
| NRVH 16 v2 | 2.6 | 14.0 | 18.4 | 21.2 |
| NRVH 19 v2 | 21.1 | 31.4 | 34.4 | 37.0 |
| NRVH 22 | - | - | 45.0 | 48.4 |
| NRVH 28 | - | - | 87.3 | 94.0 |
| NRVH 35 | - | - | 153.4 | 165.3 |
| **R450A** | | | | |
| NRVH 6 v2 | 0.1 | 0.3 | 1.3 | 1.8 |
| NRVH 10 v2 | 0.0 | 2.6 | 4.5 | 5.9 |
| NRVH 12 v2 | 5.1 | 8.3 | 9.1 | 9.8 |
| NRVH 16 v2 | 1.8 | 9.5 | 12.5 | 14.4 |
| NRVH 19 v2 | 14.6 | 21.7 | 23.6 | 25.4 |
| NRVH 22 | - | - | 30.9 | 33.2 |
| NRVH 28 | - | - | 60.0 | 64.5 |
| NRVH 35 | - | - | 105.5 | 113.4 |

*1) Rated capacities are based on:*
*-Evaporating temperature, $t_e$ = -10 °C.*
*-Condensing temperature, $t_c$ = 30 °C.*
*-Subcooling $t_{sub}$ = 5 K.*
*-Delta superheat $t_{sh}$ = 0 K.*
*-Discharge temperature, $t_d$ = 80 °C ahead of the valve.*
*The table values refer to the evaporator capacity.*

### Correction factors

When selecting the evaporator capacity is to be multiplied by a correction factor depending on the liquid temperature tl ahead of the valve/the evaporator. The corrected capacity can then be found from the table.

***System capacity·Correction factor=Table capacity***

### Correction factors for liquid temperature $t_l$

| $t_l$ [°C] | -10 | 0 | 10 | 15 | 20 | 25 | 30 | 35 | 40 | 45 | 50 |
|---|---|---|---|---|---|---|---|---|---|---|---|
| **R448A** | 0.71 | 0.78 | 0.85 | 0.90 | 0.94 | 1.00 | 1.06 | 1.13 | 1.22 | 1.32 | 1.44 |
| **R449A** | 0.71 | 0.77 | 0.85 | 0.89 | 0.94 | 1.00 | 1.06 | 1.14 | 1.22 | 1.32 | 1.44 |
| **R449B** | 0.71 | 0.78 | 0.85 | 0.90 | 0.94 | 1.00 | 1.06 | 1.13 | 1.22 | 1.32 | 1.44 |
| **R450A** | 0.72 | 0.79 | 0.86 | 0.90 | 0.95 | 1.00 | 1.06 | 1.12 | 1.20 | 1.28 | 1.38 |

## Capacity

SI units

**Liquid capacity (kW)**

| Type | Liquid capacity [1] at pressure drop across valve Δp [bar] NRV | | | |
|---|---|---|---|---|
| | 0.05 | 0.07 | 0.14 | 0.2 |
| **R452A** | | | | |
| NRV 6 v2 | 1.1 | 3.4 | 8.2 | 10.7 |
| NRV 10 v2 | 6.2 | 13.6 | 21.9 | 26.2 |
| NRV 12 v2 | 20.0 | 23.6 | 33.4 | 40.0 |
| NRV 16 v2 | 28.8 | 37.8 | 53.5 | 63.9 |
| NRV 19 v2 | 51.9 | 61.5 | 86.9 | 103.9 |
| NRV 22 | 67.7 | 80.1 | 113.3 | 135.4 |
| NRV 28 | 131.4 | 155.5 | 219.9 | 262.8 |
| NRV 35 | 230.9 | 273.3 | 386.4 | 461.9 |
| **R513A** | | | | |
| NRV 6 v2 | 1.3 | 4.1 | 9.8 | 12.8 |
| NRV 10 v2 | 7.4 | 16.2 | 26.2 | 31.4 |
| NRV 12 v2 | 23.9 | 28.3 | 40.0 | 47.8 |
| NRV 16 v2 | 34.5 | 45.3 | 64.0 | 76.5 |
| NRV 19 v2 | 62.2 | 73.6 | 104.0 | 124.3 |
| NRV 22 | 76.2 | 90.2 | 127.5 | 152.4 |
| NRV 28 | 147.9 | 175.1 | 247.6 | 295.9 |
| NRV 35 | 260.0 | 307.7 | 435.1 | 520.1 |
| **R515B** | | | | |
| NRV 6 v2 | 1.2 | 4.0 | 9.6 | 12.5 |
| NRV 10 v2 | 7.2 | 15.9 | 25.7 | 30.7 |
| NRV 12 v2 | 23.4 | 27.7 | 39.1 | 46.8 |
| NRV 16 v2 | 33.7 | 44.3 | 62.6 | 74.8 |
| NRV 19 v2 | 60.8 | 71.9 | 101.7 | 121.6 |
| NRV 22 | 79.5 | 94.1 | 133.0 | 159.0 |
| NRV 28 | 154.3 | 182.6 | 258.2 | 308.6 |
| NRV 35 | 271.2 | 320.9 | 453.8 | 542.4 |
| **R1233zd(E)** | | | | |
| NRV 6 v2 | 1.5 | 5.0 | 11.9 | 15.6 |
| NRV 10 v2 | 9.0 | 19.8 | 31.9 | 38.2 |
| NRV 12 v2 | 29.1 | 34.4 | 48.7 | 58.2 |
| NRV 16 v2 | 42.0 | 55.1 | 77.9 | 93.1 |
| NRV 19 v2 | 75.6 | 89.5 | 126.6 | 151.3 |
| NRV 22 | 98.9 | 117.0 | 165.5 | 197.8 |
| NRV 28 | 192.0 | 227.2 | 321.3 | 384.1 |
| NRV 35 | 337.5 | 399.3 | 564.8 | 675.0 |
| **R1234ze(E)** | | | | |
| NRV 6 v2 | 1.3 | 4.1 | 9.8 | 12.9 |
| NRV 10 v2 | 7.4 | 16.3 | 26.4 | 31.5 |
| NRV 12 v2 | 24.0 | 28.4 | 40.2 | 48.0 |
| NRV 16 v2 | 34.6 | 45.4 | 64.3 | 76.8 |
| NRV 19 v2 | 62.4 | 73.9 | 104.4 | 124.8 |
| NRV 22 | 81.6 | 96.6 | 136.6 | 163.2 |
| NRV 28 | 158.4 | 187.5 | 265.1 | 316.9 |
| NRV 35 | 278.5 | 329.5 | 466.0 | 557.0 |

**Suction vapour capacity in [kW]**

| Pressure drop across valve Δp [bar] | Suction vapour capacity [1] at evaporating temperature $t_e$ [°C] | | | |
|---|---|---|---|---|
| | -30 | -10 | 0 | 5 |
| **R452A** | | | | |
| 0.07 | 0.27 | 0.45 | 0.56 | 0.62 |
| 0.07 | 1.11 | 1.82 | 2.26 | 2.50 |
| 0.07 | 1.98 | 3.20 | 3.96 | 4.38 |
| 0.07 | 3.17 | 5.13 | 6.34 | 7.01 |
| 0.07 | 5.14 | 8.33 | 10.30 | 11.40 |
| 0.07 | 6.70 | 10.87 | 13.45 | 14.88 |
| 0.07 | 13.01 | 21.10 | 26.11 | 28.89 |
| 0.07 | 22.87 | 37.08 | 45.89 | 50.77 |
| **R513A** | | | | |
| 0.07 | 0.21 | 0.38 | 0.48 | 0.54 |
| 0.07 | 0.89 | 1.54 | 1.94 | 2.17 |
| 0.07 | 1.62 | 2.74 | 3.43 | 3.82 |
| 0.07 | 2.60 | 4.38 | 5.49 | 6.11 |
| 0.07 | 4.22 | 7.11 | 8.92 | 9.93 |
| 0.07 | 5.45 | 9.15 | 11.46 | 12.74 |
| 0.07 | 10.58 | 17.76 | 22.25 | 24.74 |
| 0.07 | 18.60 | 31.22 | 39.10 | 43.48 |
| **R515B** | | | | |
| 0.07 | 0.16 | 0.30 | 0.40 | 0.45 |
| 0.07 | 0.67 | 1.25 | 1.61 | 1.81 |
| 0.07 | 1.27 | 2.25 | 2.86 | 3.21 |
| 0.07 | 2.04 | 3.60 | 4.58 | 5.13 |
| 0.07 | 3.31 | 5.84 | 7.44 | 8.33 |
| 0.07 | 4.33 | 7.64 | 9.73 | 10.90 |
| 0.07 | 8.40 | 14.84 | 18.89 | 21.16 |
| 0.07 | 14.77 | 26.08 | 33.21 | 37.18 |
| **R1233zd(E)** | | | | |
| 0.07 | 0.04 | 0.11 | 0.18 | 0.22 |
| 0.07 | 0.17 | 0.52 | 0.79 | 0.93 |
| 0.07 | 0.42 | 1.11 | 1.54 | 1.77 |
| 0.07 | 0.67 | 1.78 | 2.46 | 2.83 |
| 0.07 | 1.10 | 2.89 | 3.99 | 4.60 |
| 0.07 | 1.43 | 3.78 | 5.22 | 6.02 |
| 0.07 | 2.78 | 7.34 | 10.13 | 11.68 |
| 0.07 | 4.89 | 12.90 | 17.81 | 20.53 |
| **R1234ze(E)** | | | | |
| 0.07 | 0.16 | 0.31 | 0.41 | 0.46 |
| 0.07 | 0.69 | 1.28 | 1.64 | 1.85 |
| 0.07 | 1.31 | 2.30 | 2.93 | 3.27 |
| 0.07 | 2.09 | 3.68 | 4.68 | 5.24 |
| 0.07 | 3.40 | 5.98 | 7.61 | 8.51 |
| 0.07 | 4.45 | 7.82 | 9.95 | 11.13 |
| 0.07 | 8.64 | 15.19 | 19.31 | 21.60 |
| 0.07 | 15.18 | 26.69 | 33.94 | 37.97 |

**Hot gas capacity in [kW]**

| Hot gas capacity [1] at pressure drop across valve Δp [bar] NRV | | | |
|---|---|---|---|
| 0.05 | 0.07 | 0.14 | 0.2 |
| **R452A** | | | |
| 0.2 | 0.8 | 1.9 | 2.5 |
| 1.4 | 3.1 | 5.1 | 6.0 |
| 4.6 | 5.5 | 7.7 | 9.2 |
| 6.7 | 8.8 | 12.4 | 14.7 |
| 12.1 | 14.3 | 20.1 | 24.0 |
| 15.7 | 18.6 | 26.2 | 31.3 |
| 30.5 | 36.1 | 50.9 | 60.7 |
| 53.7 | 63.5 | 89.5 | 106.7 |
| **R513A** | | | |
| 0.2 | 0.6 | 1.6 | 2.0 |
| 1.2 | 2.6 | 4.2 | 5.0 |
| 3.8 | 4.5 | 6.4 | 7.6 |
| 5.5 | 7.3 | 10.2 | 12.2 |
| 10.0 | 11.8 | 16.6 | 19.8 |
| 13.1 | 15.4 | 21.7 | 25.8 |
| 25.4 | 30.0 | 42.2 | 50.2 |
| 44.6 | 52.7 | 74.1 | 88.2 |
| **R515B** | | | |
| 0.2 | 0.6 | 1.4 | 1.8 |
| 1.0 | 2.3 | 3.7 | 4.4 |
| 3.4 | 4.0 | 5.6 | 6.6 |
| 4.9 | 6.4 | 9.0 | 10.6 |
| 8.8 | 10.4 | 14.6 | 17.3 |
| 11.5 | 13.6 | 19.0 | 22.6 |
| 22.3 | 26.3 | 36.9 | 43.8 |
| 39.2 | 46.3 | 64.9 | 77.1 |
| **R1233zd(E)** | | | |
| 0.1 | 0.3 | 0.8 | 1.1 |
| 0.6 | 1.4 | 2.3 | 2.6 |
| 2.1 | 2.5 | 3.4 | 4.0 |
| 3.1 | 4.0 | 5.5 | 6.4 |
| 5.6 | 6.5 | 8.9 | 10.4 |
| 7.3 | 8.5 | 11.7 | 13.6 |
| 14.1 | 16.5 | 22.7 | 26.4 |
| 24.8 | 29.1 | 39.9 | 46.4 |
| **R1234ze(E)** | | | |
| 0.2 | 0.6 | 1.4 | 1.8 |
| 1.1 | 2.3 | 3.8 | 4.5 |
| 3.5 | 4.1 | 5.7 | 6.8 |
| 5.0 | 6.5 | 9.2 | 10.9 |
| 9.0 | 10.6 | 14.9 | 17.7 |
| 11.7 | 13.9 | 19.5 | 23.1 |
| 22.8 | 26.9 | 37.8 | 44.8 |
| 40.1 | 47.3 | 66.4 | 78.8 |

**Hot gas capacity in [kW]**

| Type | Hot gas capacity [1] at pressure drop across valve Δp [bar] NRVH | | | |
|---|---|---|---|---|
| | 0.2 | 0.25 | 0.3 | 0.35 |
| **R452A** | | | | |
| NRVH 6 v2 | 0.1 | 0.4 | 1.6 | 2.3 |
| NRVH 10 v2 | 0.0 | 3.2 | 5.6 | 7.3 |
| NRVH 12 v2 | 6.2 | 10.3 | 11.2 | 12.1 |
| NRVH 16 v2 | 2.2 | 11.9 | 15.6 | 18.0 |
| NRVH 19 v2 | 18.0 | 26.7 | 29.2 | 31.5 |
| NRVH 22 | - | - | 38.1 | 41.1 |
| NRVH 28 | - | - | 74.0 | 79.8 |
| NRVH 35 | - | - | 130.1 | 140.2 |
| **R513A** | | | | |
| NRVH 6 v2 | 0.1 | 0.3 | 1.3 | 1.9 |
| NRVH 10 v2 | 0.0 | 2.6 | 4.6 | 6.0 |
| NRVH 12 v2 | 5.1 | 8.5 | 9.2 | 9.9 |
| NRVH 16 v2 | 1.8 | 9.7 | 12.8 | 14.7 |
| NRVH 19 v2 | 14.8 | 22.0 | 24.0 | 25.8 |
| NRVH 22 | - | - | 31.4 | 33.8 |
| NRVH 28 | - | - | 60.9 | 65.6 |
| NRVH 35 | - | - | 107.1 | 115.2 |
| **R515B** | | | | |
| NRVH 6 v2 | 0.1 | 0.3 | 1.1 | 1.6 |
| NRVH 10 v2 | 0.0 | 2.3 | 4.0 | 5.2 |
| NRVH 12 v2 | 4.5 | 7.4 | 8.0 | 8.6 |
| NRVH 16 v2 | 1.6 | 8.4 | 11.0 | 12.7 |
| NRVH 19 v2 | 12.9 | 19.2 | 20.9 | 22.5 |
| NRVH 22 | - | - | 27.3 | 29.4 |
| NRVH 28 | - | - | 53.1 | 57.0 |
| NRVH 35 | - | - | 93.3 | 100.2 |
| **R1233zd(E)** | | | | |
| NRVH 6 v2 | 0.0 | 0.1 | 0.6 | 0.8 |
| NRVH 10 v2 | 0.0 | 1.3 | 2.2 | 2.9 |
| NRVH 12 v2 | 2.7 | 4.4 | 4.7 | 4.9 |
| NRVH 16 v2 | 0.8 | 4.5 | 5.9 | 6.8 |
| NRVH 19 v2 | 7.7 | 11.4 | 12.1 | 12.8 |
| NRVH 22 | - | - | 15.9 | 16.7 |
| NRVH 28 | - | - | 30.8 | 32.5 |
| NRVH 35 | - | - | 54.2 | 57.1 |
| **R1234ze(E)** | | | | |
| NRVH 6 v2 | 0.1 | 0.3 | 1.2 | 1.7 |
| NRVH 10 v2 | 0.0 | 2.3 | 4.1 | 5.3 |
| NRVH 12 v2 | 4.6 | 7.6 | 8.2 | 8.8 |
| NRVH 16 v2 | 1.6 | 8.6 | 11.3 | 13.0 |
| NRVH 19 v2 | 13.2 | 19.6 | 21.4 | 23.0 |
| NRVH 22 | - | - | 28.0 | 30.0 |
| NRVH 28 | - | - | 54.3 | 58.3 |
| NRVH 35 | - | - | 95.4 | 102.5 |

**Correction factors for liquid temperature $t_l$**

| $t_l$ [°C] | -10 | 0 | 10 | 15 | 20 | 25 | 30 | 35 | 40 | 45 | 50 |
|---|---|---|---|---|---|---|---|---|---|---|---|
| R452A | 0.67 | 0.74 | 0.83 | 0.88 | 0.93 | 1.00 | 1.08 | 1.17 | 1.28 | 1.41 | 1.59 |
| R513A | 0.71 | 0.77 | 0.85 | 0.89 | 0.94 | 1.00 | 1.06 | 1.14 | 1.22 | 1.32 | 1.44 |
| R515B | 0.72 | 0.78 | 0.86 | 0.90 | 0.95 | 1.00 | 1.06 | 1.13 | 1.20 | 1.29 | 1.40 |
| R1233zd(E) | 0.77 | 0.82 | 0.89 | 0.92 | 0.96 | 1.00 | 1.04 | 1.09 | 1.14 | 1.20 | 1.26 |
| R1234ze(E) | 0.72 | 0.78 | 0.86 | 0.90 | 0.95 | 1.00 | 1.06 | 1.12 | 1.20 | 1.29 | 1.39 |

## Capacity

SI units

**Liquid capacity (kW)**

| Type | Liquid capacity [1] at pressure drop across valve Δp [bar] NRV | | | |
|---|---|---|---|---|
| | 0.05 | 0.07 | 0.14 | 0.2 |
| **R290** | | | | |
| NRV 6 v2 | 1.7 | 5.5 | 13.2 | 17.3 |
| NRV 10 v2 | 10.0 | 22.0 | 35.5 | 42.4 |
| NRV 12 v2 | 32.3 | 38.2 | 54.1 | 64.6 |
| NRV 16 v2 | 46.6 | 61.2 | 86.5 | 103.4 |
| NRV 19 v2 | 84.0 | 99.4 | 140.6 | 168.1 |
| NRV 22 | 110.5 | 130.8 | 184.9 | 221.1 |
| NRV 28 | 214.6 | 253.9 | 359.0 | 429.1 |
| NRV 35 | 377.1 | 446.2 | 631.0 | 754.2 |
| **R32** | | | | |
| NRV 6 v2 | 2.1 | 6.9 | 16.6 | 21.8 |
| NRV 10 v2 | 12.6 | 27.6 | 44.7 | 53.4 |
| NRV 12 v2 | 40.7 | 48.1 | 68.1 | 81.4 |
| NRV 16 v2 | 58.7 | 77.0 | 108.9 | 130.2 |
| NRV 19 v2 | 105.8 | 125.1 | 177.0 | 211.5 |
| NRV 22 | 138.3 | 163.7 | 231.4 | 276.6 |
| NRV 28 | 268.5 | 317.7 | 449.3 | 537.0 |
| NRV 35 | 471.9 | 558.3 | 789.6 | 943.8 |
| **R452B** | | | | |
| NRV 6 v2 | 1.7 | 5.6 | 13.4 | 17.5 |
| NRV 10 v2 | 10.1 | 22.2 | 35.8 | 42.8 |
| NRV 12 v2 | 32.6 | 38.6 | 54.6 | 65.3 |
| NRV 16 v2 | 47.1 | 61.8 | 87.4 | 104.4 |
| NRV 19 v2 | 84.9 | 100.4 | 142.0 | 169.7 |
| NRV 22 | 111.0 | 131.3 | 185.7 | 222.0 |
| NRV 28 | 16.5 | 215.4 | 254.9 | 360.5 |
| NRV 35 | 29.0 | 378.6 | 448.0 | 633.6 |
| **R455A** | | | | |
| NRV 6 v2 | 1.2 | 4.0 | 9.7 | 12.7 |
| NRV 10 v2 | 7.3 | 16.0 | 25.9 | 31.0 |
| NRV 12 v2 | 23.6 | 27.9 | 39.5 | 47.2 |
| NRV 16 v2 | 34.1 | 44.7 | 63.2 | 75.6 |
| NRV 19 v2 | 61.4 | 72.7 | 102.8 | 122.8 |
| NRV 22 | 80.3 | 95.0 | 134.4 | 160.6 |
| NRV 28 | 155.9 | 184.4 | 260.8 | 311.8 |
| NRV 35 | 274.0 | 324.2 | 458.4 | 548.0 |

**Suction vapour capacity in [kW]**

| Pressure drop across valve Δp [bar] | Suction vapour capacity [1] at evaporating temperature $t_e$ [°C] | | | |
|---|---|---|---|---|
| | -30 | -10 | 0 | 5 |
| **R290** | | | | |
| 0.07 | 0.42 | 0.66 | 0.81 | 0.89 |
| 0.07 | 1.71 | 2.67 | 3.25 | 3.57 |
| 0.07 | 3.06 | 4.72 | 5.72 | 6.26 |
| 0.07 | 4.89 | 7.54 | 9.14 | 10.02 |
| 0.07 | 7.94 | 12.26 | 14.86 | 16.28 |
| 0.07 | 10.41 | 16.07 | 19.49 | 21.36 |
| 0.07 | 20.20 | 31.20 | 37.83 | 41.46 |
| 0.07 | 35.50 | 54.84 | 66.50 | 72.86 |
| **R32** | | | | |
| 0.07 | 0.58 | 0.87 | 1.05 | 1.14 |
| 0.07 | 2.33 | 3.50 | 4.18 | 4.55 |
| 0.07 | 4.12 | 6.14 | 7.32 | 7.96 |
| 0.07 | 6.59 | 9.83 | 11.72 | 12.73 |
| 0.07 | 10.72 | 15.97 | 19.04 | 20.69 |
| 0.07 | 14.01 | 20.89 | 24.90 | 27.06 |
| 0.07 | 27.20 | 40.54 | 48.34 | 52.52 |
| 0.07 | 47.81 | 71.26 | 84.95 | 92.31 |
| **R452B** | | | | |
| 0.07 | 0.47 | 0.72 | 0.87 | 0.96 |
| 0.07 | 1.90 | 2.90 | 3.50 | 3.82 |
| 0.07 | 3.37 | 5.10 | 6.13 | 6.68 |
| 0.07 | 5.39 | 8.16 | 9.80 | 10.69 |
| 0.07 | 8.75 | 13.26 | 15.93 | 17.38 |
| 0.07 | 11.45 | 17.34 | 20.83 | 22.72 |
| 0.07 | 22.22 | 33.66 | 40.44 | 44.11 |
| 0.07 | 39.05 | 59.16 | 71.07 | 77.52 |
| **R455A** | | | | |
| 0.07 | 0.28 | 0.47 | 0.58 | 0.64 |
| 0.07 | 1.15 | 1.88 | 2.34 | 2.58 |
| 0.07 | 2.06 | 3.32 | 4.10 | 4.54 |
| 0.07 | 3.29 | 5.32 | 6.57 | 7.26 |
| 0.07 | 5.35 | 8.64 | 10.67 | 11.79 |
| 0.07 | 7.00 | 11.30 | 13.96 | 15.42 |
| 0.07 | 13.59 | 21.94 | 27.09 | 29.93 |
| 0.07 | 23.88 | 38.57 | 47.62 | 52.61 |

**Hot gas capacity in [kW]**

| Hot gas capacity [1] at pressure drop across valve Δp [bar] NRV | | | |
|---|---|---|---|
| 0.05 | 0.07 | 0.14 | 0.2 |
| **R290** | | | |
| 0.3 | 1.0 | 2.5 | 3.3 |
| 1.9 | 4.2 | 6.8 | 8.0 |
| 6.2 | 7.3 | 10.3 | 12.3 |
| 8.9 | 11.7 | 16.5 | 19.6 |
| 16.1 | 19.0 | 26.8 | 31.9 |
| 21.2 | 25.0 | 35.2 | 42.0 |
| 41.1 | 48.6 | 68.4 | 81.5 |
| 72.2 | 85.4 | 120.2 | 143.2 |
| **R32** | | | |
| 0.4 | 1.4 | 3.4 | 4.4 |
| 2.5 | 5.6 | 9.0 | 10.8 |
| 8.2 | 9.7 | 13.8 | 16.4 |
| 11.9 | 15.6 | 22.0 | 26.3 |
| 21.4 | 25.3 | 35.8 | 42.7 |
| 28.0 | 33.1 | 46.8 | 55.8 |
| 54.4 | 64.3 | 90.8 | 108.3 |
| 95.6 | 113.0 | 159.5 | 190.3 |
| **R452B** | | | |
| 0.4 | 1.2 | 2.8 | 3.7 |
| 2.2 | 4.7 | 7.6 | 9.1 |
| 7.0 | 8.2 | 11.6 | 13.9 |
| 10.1 | 13.2 | 18.6 | 22.2 |
| 18.1 | 21.4 | 30.2 | 36.1 |
| 23.7 | 28.0 | 39.5 | 47.2 |
| 46.0 | 54.4 | 76.8 | 91.6 |
| 80.9 | 95.6 | 134.9 | 161.0 |
| **R455A** | | | |
| 0.3 | 0.9 | 2.2 | 2.9 |
| 1.7 | 3.7 | 5.9 | 7.1 |
| 5.4 | 6.4 | 9.0 | 10.8 |
| 7.8 | 10.3 | 14.5 | 17.3 |
| 14.1 | 16.7 | 23.5 | 28.0 |
| 18.4 | 21.8 | 30.8 | 36.7 |
| 35.8 | 42.3 | 59.7 | 71.2 |
| 62.9 | 74.4 | 104.9 | 125.1 |

**Hot gas capacity in [kW]**

| Type | Hot gas capacity [1] at pressure drop across valve Δp [bar] NRVH | | | |
|---|---|---|---|---|
| | 0.2 | 0.25 | 0.3 | 0.35 |
| **R290** | | | | |
| NRVH 6 v2 | 0.2 | 0.5 | 2.1 | 3.1 |
| NRVH 10 v2 | 0.0 | 4.3 | 7.4 | 9.7 |
| NRVH 12 v2 | 8.3 | 13.7 | 14.9 | 16.1 |
| NRVH 16 v2 | 2.9 | 15.7 | 20.7 | 23.8 |
| NRVH 19 v2 | 23.9 | 35.6 | 38.8 | 41.8 |
| NRVH 22 | - | - | 51.1 | 55.0 |
| NRVH 28 | - | - | 99.2 | 106.8 |
| NRVH 35 | - | - | 174.4 | 187.8 |
| **R32** | | | | |
| NRVH 6 v2 | 0.2 | 0.7 | 2.9 | 4.2 |
| NRVH 10 v2 | 0.0 | 5.8 | 10.0 | 13.0 |
| NRVH 12 v2 | 11.1 | 18.3 | 20.0 | 21.6 |
| NRVH 16 v2 | 3.9 | 21.2 | 28.0 | 32.2 |
| NRVH 19 v2 | 32.0 | 47.6 | 52.1 | 56.2 |
| NRVH 22 | - | - | 68.1 | 73.5 |
| NRVH 28 | - | - | 132.2 | 142.6 |
| NRVH 35 | - | - | 232.4 | 250.7 |
| **R452B** | | | | |
| NRVH 6 v2 | 0.2 | 0.6 | 2.5 | 3.5 |
| NRVH 10 v2 | 0.0 | 4.9 | 8.4 | 11.0 |
| NRVH 12 v2 | 9.4 | 15.5 | 16.9 | 18.3 |
| NRVH 16 v2 | 3.3 | 17.9 | 23.6 | 27.2 |
| NRVH 19 v2 | 27.1 | 40.3 | 44.0 | 47.5 |
| NRVH 22 | - | - | 57.6 | 62.1 |
| NRVH 28 | - | - | 111.8 | 120.5 |
| NRVH 35 | - | - | 196.5 | 211.9 |
| **R455A** | | | | |
| NRVH 6 v2 | 0.2 | 0.4 | 1.9 | 2.7 |
| NRVH 10 v2 | 0.0 | 3.8 | 6.6 | 8.5 |
| NRVH 12 v2 | 7.3 | 12.0 | 13.2 | 14.2 |
| NRVH 16 v2 | 2.6 | 13.9 | 18.3 | 21.1 |
| NRVH 19 v2 | 21.0 | 31.3 | 34.2 | 36.9 |
| NRVH 22 | - | - | 44.7 | 48.2 |
| NRVH 28 | - | - | 86.8 | 93.6 |
| NRVH 35 | - | - | 152.6 | 164.5 |

*1) Rated capacities are based on:*
*-Evaporating temperature, $t_e$ = -10 °C.*
*-Condensing temperature, $t_c$ = 30 °C.*
*-Subcooling $t_{sub}$ = 5 K.*
*-Delta superheat $t_{sh}$ = 0 K.*
*-Discharge temperature, $t_d$ = 80 °C ahead of the valve.*
*The table values refer to the evaporator capacity.*

### Correction factors

When selecting the evaporator capacity is to be multiplied by a correction factor depending on the liquid temperature tl ahead of the valve/the evaporator. The corrected capacity can then be found from the table.

***System capacity·Correction factor=Table capacity***

### Correction factors for liquid temperature $t_l$

| $t_l$ [°C] | -10 | 0 | 10 | 15 | 20 | 25 | 30 | 35 | 40 | 45 | 50 |
|---|---|---|---|---|---|---|---|---|---|---|---|
| **R290** | 0.73 | 0.79 | 0.86 | 0.90 | 0.95 | 1.00 | 1.06 | 1.12 | 1.19 | 1.28 | 1.38 |
| **R32** | 0.76 | 0.82 | 0.88 | 0.92 | 0.96 | 1.00 | 1.05 | 1.11 | 1.17 | 1.24 | 1.33 |
| **R452B** | 0.74 | 0.80 | 0.86 | 0.91 | 0.95 | 1.00 | 1.06 | 1.12 | 1.20 | 1.28 | 1.39 |
| **R455A** | 0.70 | 0.77 | 0.84 | 0.89 | 0.94 | 1.00 | 1.07 | 1.14 | 1.23 | 1.34 | 1.47 |

## Capacity

SI units

**Liquid capacity (kW)**

| Type | Liquid capacity [1]) at pressure drop across valve Δp [bar] NRV | | | |
|---|---|---|---|---|
| | 0.05 | 0.07 | 0.14 | 0.2 |
| **R454A** | | | | |
| NRV 6 v2 | 1.4 | 4.4 | 10.5 | 13.8 |
| NRV 10 v2 | 8.0 | 17.5 | 28.3 | 33.8 |
| NRV 12 v2 | 25.8 | 30.5 | 43.1 | 51.5 |
| NRV 16 v2 | 37.2 | 48.8 | 69.0 | 82.5 |
| NRV 19 v2 | 67.0 | 79.3 | 112.1 | 134.0 |
| NRV 22 | 87.6 | 103.7 | 146.6 | 175.2 |
| NRV 28 | 170.1 | 201.2 | 284.6 | 340.1 |
| NRV 35 | 298.9 | 353.7 | 500.1 | 597.8 |
| **R454B** | | | | |
| NRV 6 v2 | 1.7 | 5.6 | 13.5 | 17.7 |
| NRV 10 v2 | 10.2 | 22.5 | 36.3 | 43.4 |
| NRV 12 v2 | 33.1 | 39.2 | 55.4 | 66.2 |
| NRV 16 v2 | 47.8 | 62.7 | 88.6 | 105.9 |
| NRV 19 v2 | 86.1 | 101.8 | 144.0 | 172.2 |
| NRV 22 | 112.6 | 133.2 | 188.3 | 225.1 |
| NRV 28 | 218.5 | 258.5 | 365.6 | 437.0 |
| NRV 35 | 384.0 | 454.4 | 642.6 | 768.1 |
| **R454C** | | | | |
| NRV 6 v2 | 1.2 | 4.0 | 9.5 | 12.5 |
| NRV 10 v2 | 7.2 | 15.8 | 25.5 | 30.5 |
| NRV 12 v2 | 23.2 | 27.5 | 38.9 | 46.5 |
| NRV 16 v2 | 33.5 | 44.0 | 62.2 | 74.4 |
| NRV 19 v2 | 60.4 | 71.5 | 101.1 | 120.9 |
| NRV 22 | 79.0 | 93.5 | 132.2 | 158.1 |
| NRV 28 | 153.4 | 181.5 | 256.7 | 306.8 |
| NRV 35 | 269.6 | 319.0 | 451.2 | 539.3 |
| **R516A** | | | | |
| NRV 6 v2 | 1.2 | 3.9 | 9.3 | 12.2 |
| NRV 10 v2 | 7.1 | 15.5 | 25.0 | 29.9 |
| NRV 12 v2 | 22.8 | 27.0 | 38.2 | 45.6 |
| NRV 16 v2 | 32.9 | 43.2 | 61.0 | 73.0 |
| NRV 19 v2 | 59.3 | 70.1 | 99.2 | 118.6 |
| NRV 22 | 77.5 | 91.7 | 129.7 | 155.0 |
| NRV 28 | 150.5 | 178.0 | 251.8 | 301.0 |
| NRV 35 | 264.5 | 312.9 | 442.6 | 529.0 |

**Suction vapour capacity in [kW]**

| Pressure drop across valve Δp [bar] | Suction vapour capacity [1]) at evaporating temperature $t_e$ [°C] | | | |
|---|---|---|---|---|
| | -30 | -10 | 0 | 5 |
| **R454A** | | | | |
| 0.07 | 0.33 | 0.53 | 0.65 | 0.72 |
| 0.07 | 1.33 | 2.13 | 2.62 | 2.89 |
| 0.07 | 2.37 | 3.76 | 4.60 | 5.07 |
| 0.07 | 3.80 | 6.02 | 7.37 | 8.11 |
| 0.07 | 6.17 | 9.77 | 11.97 | 13.18 |
| 0.07 | 8.07 | 12.78 | 15.65 | 17.23 |
| 0.07 | 15.66 | 24.81 | 30.39 | 33.45 |
| 0.07 | 27.53 | 43.61 | 53.41 | 58.78 |
| **R454B** | | | | |
| 0.07 | 0.47 | 0.73 | 0.88 | 0.96 |
| 0.07 | 1.91 | 2.91 | 3.51 | 3.83 |
| 0.07 | 3.38 | 5.12 | 6.15 | 6.70 |
| 0.07 | 5.40 | 8.18 | 9.83 | 10.72 |
| 0.07 | 8.78 | 13.30 | 15.98 | 17.43 |
| 0.07 | 11.48 | 17.39 | 20.89 | 22.79 |
| 0.07 | 22.29 | 33.76 | 40.56 | 44.23 |
| 0.07 | 39.18 | 59.34 | 71.28 | 77.75 |
| **R454C** | | | | |
| 0.07 | 0.27 | 0.45 | 0.56 | 0.62 |
| 0.07 | 1.10 | 1.82 | 2.26 | 2.50 |
| 0.07 | 1.98 | 3.21 | 3.97 | 4.39 |
| 0.07 | 3.17 | 5.14 | 6.35 | 7.03 |
| 0.07 | 5.15 | 8.35 | 10.33 | 11.42 |
| 0.07 | 6.73 | 10.92 | 13.50 | 14.93 |
| 0.07 | 13.07 | 21.19 | 26.21 | 28.99 |
| 0.07 | 22.96 | 37.25 | 46.07 | 50.94 |
| **R516A** | | | | |
| 0.07 | 0.21 | 0.38 | 0.48 | 0.53 |
| 0.07 | 0.89 | 1.53 | 1.93 | 2.14 |
| 0.07 | 1.63 | 2.72 | 3.40 | 3.78 |
| 0.07 | 2.61 | 4.36 | 5.45 | 6.05 |
| 0.07 | 4.25 | 7.08 | 8.85 | 9.83 |
| 0.07 | 5.56 | 9.26 | 11.57 | 12.86 |
| 0.07 | 10.79 | 17.98 | 22.47 | 24.96 |
| 0.07 | 18.96 | 31.61 | 39.49 | 43.86 |

**Hot gas capacity in [kW]**

| Hot gas capacity [1]) at pressure drop across valve Δp [bar] NRV | | | |
|---|---|---|---|
| 0.05 | 0.07 | 0.14 | 0.2 |
| **R454A** | | | |
| 0.3 | 1.0 | 2.3 | 3.0 |
| 1.7 | 3.8 | 6.1 | 7.3 |
| 5.6 | 6.6 | 9.4 | 11.2 |
| 8.1 | 10.6 | 15.0 | 17.9 |
| 14.6 | 17.3 | 24.4 | 29.1 |
| 19.1 | 22.6 | 31.9 | 38.0 |
| 37.1 | 43.9 | 61.9 | 73.7 |
| 65.2 | 77.1 | 108.7 | 129.6 |
| **R454B** | | | |
| 0.4 | 1.2 | 2.9 | 3.7 |
| 2.2 | 4.8 | 7.7 | 9.2 |
| 7.0 | 8.3 | 11.7 | 14.0 |
| 10.1 | 13.3 | 18.7 | 22.3 |
| 18.2 | 21.6 | 30.4 | 36.3 |
| 23.9 | 28.2 | 39.8 | 47.5 |
| 46.3 | 54.8 | 77.3 | 92.2 |
| 81.4 | 96.2 | 135.8 | 162.0 |
| **R454C** | | | |
| 0.3 | 0.8 | 2.0 | 2.7 |
| 1.5 | 3.4 | 5.5 | 6.5 |
| 5.0 | 5.9 | 8.3 | 9.9 |
| 7.2 | 9.5 | 13.3 | 15.9 |
| 13.0 | 15.4 | 21.7 | 25.8 |
| 17.0 | 20.1 | 28.3 | 33.8 |
| 33.0 | 39.0 | 55.0 | 65.6 |
| 58.0 | 68.6 | 96.7 | 115.2 |
| **R516A** | | | |
| 0.2 | 0.7 | 1.6 | 2.0 |
| 1.2 | 2.6 | 4.2 | 5.0 |
| 3.9 | 4.6 | 6.4 | 7.6 |
| 5.6 | 7.3 | 10.3 | 12.2 |
| 10.1 | 11.9 | 16.7 | 19.9 |
| 13.1 | 15.5 | 21.8 | 26.0 |
| 25.5 | 30.1 | 42.4 | 50.4 |
| 44.9 | 53.0 | 74.5 | 88.6 |

**Hot gas capacity in [kW]**

| Type | Hot gas capacity [1]) at pressure drop across valve Δp [bar] NRVH | | | |
|---|---|---|---|---|
| | 0.2 | 0.25 | 0.3 | 0.35 |
| **R454A** | | | | |
| NRVH 6 v2 | 0.2 | 0.5 | 2.0 | 2.8 |
| NRVH 10 v2 | 0.0 | 3.9 | 6.8 | 8.8 |
| NRVH 12 v2 | 7.6 | 12.5 | 13.6 | 14.7 |
| NRVH 16 v2 | 2.7 | 14.4 | 19.0 | 21.8 |
| NRVH 19 v2 | 21.8 | 32.4 | 35.4 | 38.2 |
| NRVH 22 | - | - | 46.3 | 49.9 |
| NRVH 28 | - | - | 89.9 | 97.0 |
| NRVH 35 | - | - | 158.1 | 170.4 |
| **R454B** | | | | |
| NRVH 6 v2 | 0.2 | 0.6 | 2.5 | 3.5 |
| NRVH 10 v2 | 0.0 | 4.9 | 8.5 | 11.1 |
| NRVH 12 v2 | 9.5 | 15.6 | 17.0 | 18.4 |
| NRVH 16 v2 | 3.4 | 18.1 | 23.8 | 27.3 |
| NRVH 19 v2 | 27.2 | 40.5 | 44.3 | 47.8 |
| NRVH 22 | - | - | 58.0 | 62.5 |
| NRVH 28 | - | - | 112.5 | 121.3 |
| NRVH 35 | - | - | 197.7 | 213.2 |
| **R454C** | | | | |
| NRVH 6 v2 | 0.1 | 0.4 | 1.7 | 2.5 |
| NRVH 10 v2 | 0.0 | 3.5 | 6.0 | 7.8 |
| NRVH 12 v2 | 6.7 | 11.1 | 12.1 | 13.0 |
| NRVH 16 v2 | 2.4 | 12.8 | 16.9 | 19.4 |
| NRVH 19 v2 | 19.4 | 28.8 | 31.5 | 33.9 |
| NRVH 22 | - | - | 41.2 | 44.4 |
| NRVH 28 | - | - | 79.9 | 86.1 |
| NRVH 35 | - | - | 140.5 | 151.4 |
| **R516A** | | | | |
| NRVH 6 v2 | 0.1 | 0.3 | 1.3 | 1.9 |
| NRVH 10 v2 | 0.0 | 2.7 | 4.6 | 6.0 |
| NRVH 12 v2 | 5.2 | 8.5 | 9.3 | 10.0 |
| NRVH 16 v2 | 1.8 | 9.7 | 12.8 | 14.7 |
| NRVH 19 v2 | 14.9 | 22.1 | 24.1 | 26.0 |
| NRVH 22 | - | - | 31.5 | 33.9 |
| NRVH 28 | - | - | 61.2 | 65.9 |
| NRVH 35 | - | - | 107.6 | 115.8 |

*1) Rated capacities are based on:*
*-Evaporating temperature, $t_e$ = -10 °C.*
*-Condensing temperature, $t_c$ = 30 °C.*
*-Subcooling $t_{sub}$ = 5 K.*
*-Delta superheat $t_{sh}$ = 0 K.*
*-Discharge temperature, $t_d$ = 80 °C ahead of the valve.*
*The table values refer to the evaporator capacity.*

### Correction factors

When selecting the evaporator capacity is to be multiplied by a correction factor depending on the liquid temperature tl ahead of the valve/the evaporator. The corrected capacity can then be found from the table.

***System capacity·Correction factor=Table capacity***

**Correction factors for liquid temperature $t_l$**

| $t_l$ [°C] | -10 | 0 | 10 | 15 | 20 | 25 | 30 | 35 | 40 | 45 | 50 |
|---|---|---|---|---|---|---|---|---|---|---|---|
| **R454A** | 0.71 | 0.77 | 0.85 | 0.89 | 0.94 | 1.00 | 1.06 | 1.14 | 1.22 | 1.32 | 1.44 |
| **R454B** | 0.74 | 0.80 | 0.87 | 0.91 | 0.95 | 1.00 | 1.06 | 1.12 | 1.19 | 1.28 | 1.38 |
| **R454C** | 0.70 | 0.77 | 0.84 | 0.89 | 0.94 | 1.00 | 1.07 | 1.14 | 1.23 | 1.34 | 1.47 |
| **R516A** | 0.71 | 0.77 | 0.85 | 0.89 | 0.94 | 1.00 | 1.06 | 1.14 | 1.22 | 1.32 | 1.43 |

## Capacity

SI units

**Liquid capacity (kW)**

| Type | Liquid capacity [1]) at pressure drop across valve Δp [bar] NRV | | | |
|---|---|---|---|---|
| | 0.05 | 0.07 | 0.14 | 0.2 |
| **R600** | | | | |
| NRV 6 v2 | 1.9 | 6.2 | 15.0 | 19.6 |
| NRV 10 v2 | 11.3 | 24.9 | 40.2 | 48.0 |
| NRV 12 v2 | 36.6 | 43.3 | 61.2 | 73.2 |
| NRV 16 v2 | 52.8 | 69.3 | 98.0 | 117.1 |
| NRV 19 v2 | 95.2 | 112.6 | 159.2 | 190.3 |
| NRV 22 | 124.4 | 147.2 | 208.2 | 248.9 |
| NRV 28 | 241.6 | 285.8 | 404.2 | 483.1 |
| NRV 35 | 424.5 | 502.3 | 710.4 | 849.1 |
| **R600a** | | | | |
| NRV 6 v2 | 1.7 | 5.5 | 13.3 | 17.4 |
| NRV 10 v2 | 10.0 | 22.1 | 35.6 | 42.6 |
| NRV 12 v2 | 32.5 | 38.4 | 54.3 | 64.9 |
| NRV 16 v2 | 46.9 | 61.5 | 86.9 | 103.9 |
| NRV 19 v2 | 84.4 | 99.9 | 141.3 | 168.8 |
| NRV 22 | 110.4 | 130.6 | 184.7 | 220.8 |
| NRV 28 | 214.3 | 253.5 | 358.6 | 428.6 |
| NRV 35 | 376.6 | 445.6 | 630.2 | 753.2 |
| **R1234yf** | | | | |
| NRV 6 v2 | 1.1 | 3.4 | 8.1 | 10.7 |
| NRV 10 v2 | 6.2 | 13.5 | 21.8 | 26.1 |
| NRV 12 v2 | 19.9 | 23.5 | 33.3 | 39.8 |
| NRV 16 v2 | 28.7 | 37.7 | 53.3 | 63.7 |
| NRV 19 v2 | 51.7 | 61.2 | 86.6 | 103.5 |
| NRV 22 | 67.9 | 80.4 | 113.7 | 135.9 |
| NRV 28 | 131.9 | 156.0 | 220.7 | 263.8 |
| NRV 35 | 231.8 | 274.2 | 387.8 | 463.6 |
| **R1270** | | | | |
| NRV 6 v2 | 1.8 | 5.7 | 13.7 | 18.0 |
| NRV 10 v2 | 10.4 | 22.8 | 36.9 | 44.1 |
| NRV 12 v2 | 33.6 | 39.8 | 56.2 | 67.2 |
| NRV 16 v2 | 48.5 | 63.6 | 90.0 | 107.5 |
| NRV 19 v2 | 87.4 | 103.4 | 146.2 | 174.7 |
| NRV 22 | 114.2 | 135.2 | 191.2 | 228.5 |
| NRV 28 | 221.8 | 262.4 | 371.1 | 443.5 |
| NRV 35 | 389.8 | 461.2 | 652.2 | 779.5 |

**Suction vapour capacity in [kW]**

| Pressure drop across valve Δp [bar] | Suction vapour capacity [1]) at evaporating temperature $t_e$ [°C] | | | |
|---|---|---|---|---|
| | -30 | -10 | 0 | 5 |
| **R600** | | | | |
| 0.07 | 0.12 | 0.29 | 0.40 | 0.45 |
| 0.07 | 0.58 | 1.25 | 1.64 | 1.86 |
| 0.07 | 1.25 | 2.34 | 3.00 | 3.37 |
| 0.07 | 2.01 | 3.74 | 4.80 | 5.40 |
| 0.07 | 3.26 | 6.07 | 7.81 | 8.77 |
| 0.07 | 4.27 | 7.94 | 10.21 | 11.47 |
| 0.07 | 8.28 | 15.42 | 19.82 | 22.26 |
| 0.07 | 14.55 | 27.10 | 34.83 | 39.12 |
| **R600a** | | | | |
| 0.07 | 0.18 | 0.36 | 0.47 | 0.53 |
| 0.07 | 0.80 | 1.49 | 1.91 | 2.14 |
| 0.07 | 1.57 | 2.72 | 3.44 | 3.83 |
| 0.07 | 2.51 | 4.36 | 5.50 | 6.13 |
| 0.07 | 4.08 | 7.08 | 8.93 | 9.96 |
| 0.07 | 5.33 | 9.26 | 11.68 | 13.03 |
| 0.07 | 10.35 | 17.97 | 22.68 | 25.29 |
| 0.07 | 18.19 | 31.58 | 39.86 | 44.44 |
| **R1234yf** | | | | |
| 0.07 | 0.19 | 0.34 | 0.44 | 0.49 |
| 0.07 | 0.80 | 1.39 | 1.76 | 1.97 |
| 0.07 | 1.47 | 2.48 | 3.11 | 3.47 |
| 0.07 | 2.34 | 3.96 | 4.98 | 5.55 |
| 0.07 | 3.81 | 6.44 | 8.09 | 9.01 |
| 0.07 | 5.00 | 8.44 | 10.61 | 11.81 |
| 0.07 | 9.71 | 16.39 | 20.59 | 22.93 |
| 0.07 | 17.07 | 28.81 | 36.19 | 40.31 |
| **R1270** | | | | |
| 0.07 | 0.48 | 0.75 | 0.90 | 0.99 |
| 0.07 | 1.97 | 3.00 | 3.62 | 3.95 |
| 0.07 | 3.50 | 5.29 | 6.35 | 6.93 |
| 0.07 | 5.60 | 8.46 | 10.16 | 11.09 |
| 0.07 | 9.09 | 13.74 | 16.51 | 18.01 |
| 0.07 | 11.89 | 17.97 | 21.59 | 23.56 |
| 0.07 | 23.08 | 34.89 | 41.91 | 45.73 |
| 0.07 | 40.57 | 61.32 | 73.67 | 80.37 |

**Hot gas capacity in [kW]**

| Hot gas capacity [1]) at pressure drop across valve Δp [bar] NRV | | | |
|---|---|---|---|
| 0.05 | 0.07 | 0.14 | 0.2 |
| **R600** | | | |
| 0.2 | 0.6 | 1.4 | 1.9 |
| 1.1 | 2.4 | 3.9 | 4.6 |
| 3.7 | 4.3 | 6.0 | 7.1 |
| 5.3 | 6.9 | 9.6 | 11.3 |
| 9.5 | 11.2 | 15.6 | 18.4 |
| 12.5 | 14.7 | 20.4 | 24.1 |
| 24.2 | 28.5 | 39.7 | 46.8 |
| 42.6 | 50.2 | 69.8 | 82.2 |
| **R600a** | | | |
| 0.2 | 0.7 | 1.6 | 2.1 |
| 1.2 | 2.7 | 4.3 | 5.1 |
| 4.0 | 4.7 | 6.6 | 7.8 |
| 5.8 | 7.6 | 10.6 | 12.5 |
| 10.4 | 12.3 | 17.2 | 20.4 |
| 13.6 | 16.1 | 22.5 | 26.6 |
| 26.5 | 31.2 | 43.7 | 51.7 |
| 46.6 | 54.9 | 76.8 | 90.9 |
| **R1234yf** | | | |
| 0.2 | 0.6 | 1.4 | 1.9 |
| 1.1 | 2.4 | 3.8 | 4.5 |
| 3.5 | 4.1 | 5.8 | 6.9 |
| 5.0 | 6.6 | 9.3 | 11.1 |
| 9.1 | 10.8 | 15.1 | 18.0 |
| 11.9 | 14.1 | 19.8 | 23.5 |
| 23.1 | 27.3 | 38.4 | 45.7 |
| 40.6 | 48.0 | 67.5 | 80.3 |
| **R1270** | | | |
| 0.4 | 1.2 | 2.8 | 3.7 |
| 2.1 | 4.6 | 7.5 | 8.9 |
| 6.9 | 8.1 | 11.4 | 13.6 |
| 9.9 | 13.0 | 18.3 | 21.8 |
| 17.8 | 21.1 | 29.7 | 35.4 |
| 23.3 | 27.6 | 38.9 | 46.3 |
| 45.3 | 53.5 | 75.4 | 89.9 |
| 79.6 | 94.1 | 132.6 | 158.0 |

**Hot gas capacity in [kW]**

| Type | Hot gas capacity [1]) at pressure drop across valve Δp [bar] NRVH | | | |
|---|---|---|---|---|
| | 0.2 | 0.25 | 0.3 | 0.35 |
| **R600** | | | | |
| NRVH 6 v2 | 0.1 | 0.3 | 1.1 | 1.6 |
| NRVH 10 v2 | 0.0 | 2.4 | 4.1 | 5.4 |
| NRVH 12 v2 | 4.8 | 7.8 | 8.5 | 9.0 |
| NRVH 16 v2 | 1.6 | 8.6 | 11.3 | 13.0 |
| NRVH 19 v2 | 13.7 | 20.4 | 22.0 | 23.5 |
| NRVH 22 | - | - | 28.8 | 30.7 |
| NRVH 28 | - | - | 55.9 | 59.7 |
| NRVH 35 | - | - | 98.3 | 104.8 |
| **R600a** | | | | |
| NRVH 6 v2 | 0.1 | 0.3 | 1.3 | 1.9 |
| NRVH 10 v2 | 0.0 | 2.7 | 4.6 | 6.0 |
| NRVH 12 v2 | 5.3 | 8.7 | 9.4 | 10.1 |
| NRVH 16 v2 | 1.8 | 9.7 | 12.8 | 14.7 |
| NRVH 19 v2 | 15.2 | 22.6 | 24.5 | 26.3 |
| NRVH 22 | - | - | 32.1 | 34.4 |
| NRVH 28 | - | - | 62.3 | 66.7 |
| NRVH 35 | - | - | 109.5 | 117.2 |
| **R1234yf** | | | | |
| NRVH 6 v2 | 0.1 | 0.3 | 1.2 | 1.7 |
| NRVH 10 v2 | 0.0 | 2.4 | 4.2 | 5.4 |
| NRVH 12 v2 | 4.7 | 7.7 | 8.4 | 9.0 |
| NRVH 16 v2 | 1.6 | 8.8 | 11.6 | 13.3 |
| NRVH 19 v2 | 13.5 | 20.0 | 21.8 | 23.5 |
| NRVH 22 | - | - | 28.6 | 30.7 |
| NRVH 28 | - | - | 55.4 | 59.6 |
| NRVH 35 | - | - | 97.5 | 104.8 |
| **R1270** | | | | |
| NRVH 6 v2 | 0.2 | 0.6 | 2.4 | 3.4 |
| NRVH 10 v2 | 0.0 | 4.8 | 8.3 | 10.8 |
| NRVH 12 v2 | 9.2 | 15.2 | 16.6 | 17.9 |
| NRVH 16 v2 | 3.3 | 17.5 | 23.1 | 26.6 |
| NRVH 19 v2 | 26.6 | 39.5 | 43.2 | 46.5 |
| NRVH 22 | - | - | 56.5 | 60.8 |
| NRVH 28 | - | - | 109.6 | 118.1 |
| NRVH 35 | - | - | 192.6 | 207.5 |

*1) Rated capacities are based on:*
*-Evaporating temperature, $t_e$ = -10 °C.*
*-Condensing temperature, $t_c$ = 30 °C.*
*-Subcooling $t_{sub}$ = 5 K.*
*-Delta superheat $t_{sh}$ = 0 K.*
*-Discharge temperature, $t_d$ = 80 °C ahead of the valve.*
*The table values refer to the evaporator capacity.*

### Correction factors

When selecting the evaporator capacity is to be multiplied by a correction factor depending on the liquid temperature tl ahead of the valve/the evaporator. The corrected capacity can then be found from the table.

***System capacity·Correction factor=Table capacity***

### Correction factors for liquid temperature $t_l$

| $t_l$ [°C] | -10 | 0 | 10 | 15 | 20 | 25 | 30 | 35 | 40 | 45 | 50 |
|---|---|---|---|---|---|---|---|---|---|---|---|
| **R600** | 0.77 | 0.82 | 0.88 | 0.92 | 0.96 | 1.00 | 1.05 | 1.10 | 1.15 | 1.22 | 1.29 |
| **R600a** | 0.75 | 0.81 | 0.87 | 0.91 | 0.95 | 1.00 | 1.05 | 1.11 | 1.17 | 1.25 | 1.33 |
| **R1234yf** | 0.69 | 0.76 | 0.84 | 0.89 | 0.94 | 1.00 | 1.07 | 1.15 | 1.24 | 1.36 | 1.49 |
| **R1270** | 0.74 | 0.80 | 0.87 | 0.91 | 0.95 | 1.00 | 1.06 | 1.12 | 1.19 | 1.27 | 1.37 |

Note:
*- For capacity calculation of other refrigerants, please contact Danfoss.*

## Capacity

US units

**Liquid capacity [TR]**

| Type | Liquid capacity [1]) at pressure drop across valve Δp [psi] | | | |
|---|---|---|---|---|
| | NRV | | | |
| | 0.7 | 1 | 2 | 3 |
| **R134a** | | | | |
| NRV 6 v2 | 0.3 | 1.3 | 3.1 | 4.2 |
| NRV 10 v2 | 2.1 | 5.1 | 8.3 | 10.2 |
| NRV 12 v2 | 7.5 | 9.0 | 12.7 | 15.6 |
| NRV 16 v2 | 10.7 | 14.3 | 20.4 | 24.9 |
| NRV 19 v2 | 19.6 | 23.4 | 33.1 | 40.5 |
| NRV 22 | 25.6 | 30.6 | 43.3 | 53.0 |
| NRV 28 | 49.7 | 59.4 | 84.0 | 102.9 |
| NRV 35 | 87.3 | 104.4 | 147.6 | 180.8 |
| **R22** | | | | |
| NRV 6 v2 | 0.4 | 1.4 | 3.3 | 4.5 |
| NRV 10 v2 | 2.2 | 5.5 | 8.9 | 11.0 |
| NRV 12 v2 | 8.1 | 9.7 | 13.7 | 16.7 |
| NRV 16 v2 | 11.5 | 15.4 | 21.9 | 26.8 |
| NRV 19 v2 | 21.0 | 25.1 | 35.5 | 43.5 |
| NRV 22 | 27.5 | 32.9 | 46.5 | 56.9 |
| NRV 28 | 53.4 | 63.8 | 90.2 | 110.5 |
| NRV 35 | 93.8 | 112.1 | 158.5 | 194.1 |
| **R404A** | | | | |
| NRV 6 v2 | 0.2 | 0.9 | 2.3 | 3.1 |
| NRV 10 v2 | 1.5 | 3.7 | 6.1 | 7.5 |
| NRV 12 v2 | 5.5 | 6.6 | 9.3 | 11.4 |
| NRV 16 v2 | 7.9 | 10.5 | 14.9 | 18.2 |
| NRV 19 v2 | 14.3 | 17.1 | 24.2 | 29.6 |
| NRV 22 | 18.7 | 22.4 | 31.7 | 38.8 |
| NRV 28 | 36.4 | 43.5 | 61.5 | 75.3 |
| NRV 35 | 63.9 | 76.4 | 108.0 | 132.3 |
| **R410A** | | | | |
| NRV 6 v2 | 0.3 | 1.3 | 3.3 | 4.4 |
| NRV 10 v2 | 2.2 | 5.4 | 8.8 | 10.8 |
| NRV 12 v2 | 7.9 | 9.5 | 13.4 | 16.4 |
| NRV 16 v2 | 11.3 | 15.1 | 21.5 | 26.3 |
| NRV 19 v2 | 20.7 | 24.7 | 34.9 | 42.8 |
| NRV 22 | 27.0 | 32.3 | 45.7 | 55.9 |
| NRV 28 | 52.4 | 62.7 | 88.6 | 108.5 |
| NRV 35 | 92.2 | 110.1 | 155.8 | 190.8 |

**Suction vapour capacity [TR]**

| Pressure drop across valve Δp [psi] | Suction vapour capacity [1]) at evaporating temperature $t_e$ [°F] | | | |
|---|---|---|---|---|
| | -20 | 15 | 32 | 40 |
| **R134a** | | | | |
| 1 | 0.06 | 0.11 | 0.14 | 0.15 |
| 1 | 0.26 | 0.45 | 0.56 | 0.62 |
| 1 | 0.49 | 0.81 | 1.01 | 1.11 |
| 1 | 0.78 | 1.29 | 1.60 | 1.76 |
| 1 | 1.28 | 2.11 | 2.61 | 2.87 |
| 1 | 1.67 | 2.77 | 3.42 | 3.76 |
| 1 | 3.25 | 5.37 | 6.64 | 7.29 |
| 1 | 5.71 | 9.44 | 11.67 | 12.82 |
| **R22** | | | | |
| 1 | 0.10 | 0.15 | 0.18 | 0.20 |
| 1 | 0.40 | 0.62 | 0.74 | 0.80 |
| 1 | 0.72 | 1.10 | 1.31 | 1.42 |
| 1 | 1.15 | 1.74 | 2.08 | 2.25 |
| 1 | 1.88 | 2.85 | 3.40 | 3.68 |
| 1 | 2.46 | 3.72 | 4.45 | 4.82 |
| 1 | 4.77 | 7.23 | 8.63 | 9.35 |
| 1 | 8.39 | 12.70 | 15.18 | 16.43 |
| **R404A** | | | | |
| 1 | 0.08 | 0.13 | 0.16 | 0.18 |
| 1 | 0.34 | 0.54 | 0.66 | 0.72 |
| 1 | 0.61 | 0.96 | 1.16 | 1.27 |
| 1 | 0.96 | 1.52 | 1.85 | 2.02 |
| 1 | 1.58 | 2.48 | 3.02 | 3.30 |
| 1 | 2.06 | 3.25 | 3.95 | 4.32 |
| 1 | 4.00 | 6.30 | 7.67 | 8.38 |
| 1 | 7.03 | 11.08 | 13.49 | 14.73 |
| **R410A** | | | | |
| 1 | 0.12 | 0.19 | 0.23 | 0.25 |
| 1 | 0.51 | 0.77 | 0.93 | 1.00 |
| 1 | 0.91 | 1.37 | 1.64 | 1.77 |
| 1 | 1.45 | 2.18 | 2.60 | 2.81 |
| 1 | 2.37 | 3.57 | 4.25 | 4.60 |
| 1 | 3.10 | 4.66 | 5.56 | 6.01 |
| 1 | 6.03 | 9.05 | 10.79 | 11.68 |
| 1 | 10.59 | 15.91 | 18.97 | 20.52 |

**Hot gas capacity [TR]**

| Hot gas capacity [1]) at pressure drop across valve Δp [psi] | | | |
|---|---|---|---|
| NRV | | | |
| 0.7 | 1 | 2 | 4 |
| **R134a** | | | |
| 0.0 | 0.2 | 0.4 | 0.6 |
| 0.3 | 0.7 | 1.1 | 1.6 |
| 1.0 | 1.2 | 1.7 | 2.4 |
| 1.4 | 1.9 | 2.7 | 3.8 |
| 2.6 | 3.1 | 4.4 | 6.1 |
| 3.4 | 4.1 | 5.7 | 8.0 |
| 6.7 | 7.9 | 11.2 | 15.6 |
| 11.7 | 14.0 | 19.6 | 27.4 |
| **R22** | | | |
| 0.1 | 0.2 | 0.5 | 0.8 |
| 0.3 | 0.8 | 1.4 | 1.9 |
| 1.3 | 1.5 | 2.1 | 3.0 |
| 1.8 | 2.4 | 3.4 | 4.7 |
| 3.3 | 3.9 | 5.5 | 7.7 |
| 4.3 | 5.1 | 7.2 | 10.1 |
| 8.3 | 9.9 | 13.9 | 19.6 |
| 14.6 | 17.4 | 24.5 | 34.4 |
| **R404A** | | | |
| 0.0 | 0.2 | 0.4 | 0.7 |
| 0.3 | 0.7 | 1.2 | 1.7 |
| 1.1 | 1.3 | 1.8 | 2.5 |
| 1.5 | 2.0 | 2.9 | 4.0 |
| 2.8 | 3.3 | 4.7 | 6.6 |
| 3.6 | 4.3 | 6.1 | 8.6 |
| 7.1 | 8.4 | 11.9 | 16.7 |
| 12.4 | 14.8 | 20.9 | 29.3 |
| **R410A** | | | |
| 0.1 | 0.3 | 0.6 | 1.0 |
| 0.4 | 1.0 | 1.7 | 2.4 |
| 1.5 | 1.8 | 2.6 | 3.6 |
| 2.2 | 2.9 | 4.1 | 5.8 |
| 3.9 | 4.7 | 6.7 | 9.4 |
| 5.2 | 6.2 | 8.7 | 12.3 |
| 10.0 | 12.0 | 16.9 | 23.8 |
| 17.6 | 21.0 | 29.7 | 41.8 |

**Hot gas capacity [TR]**

| Type | Hot gas capacity [1]) at pressure drop across valve Δp [psi] | | | |
|---|---|---|---|---|
| | NRVH | | | |
| | 3 | 4 | 5 | 6 |
| **R134a** | | | | |
| NRVH 6 v2 | 0.0 | 0.1 | 0.5 | 0.6 |
| NRVH 10 v2 | 0.1 | 1.0 | 1.6 | 1.9 |
| NRVH 12 v2 | 1.6 | 2.4 | 2.6 | 2.9 |
| NRVH 16 v2 | 0.7 | 3.1 | 3.9 | 4.4 |
| NRVH 19 v2 | 4.3 | 6.1 | 6.8 | 7.4 |
| NRVH 22 | 7.0 | 8.0 | 8.9 | 9.7 |
| NRVH 28 | 13.6 | 15.6 | 17.3 | 18.9 |
| NRVH 35 | 23.9 | 27.4 | 30.5 | 33.2 |
| **R22** | | | | |
| NRVH 6 v2 | 0.0 | 0.2 | 0.6 | 0.8 |
| NRVH 10 v2 | 0.1 | 1.2 | 2.0 | 2.4 |
| NRVH 12 v2 | 2.1 | 3.0 | 3.3 | 3.6 |
| NRVH 16 v2 | 0.8 | 3.9 | 4.9 | 5.6 |
| NRVH 19 v2 | 5.4 | 7.7 | 8.6 | 9.4 |
| NRVH 22 | 8.8 | 10.1 | 11.2 | 12.3 |
| NRVH 28 | 17.0 | 19.6 | 21.8 | 23.8 |
| NRVH 35 | 29.9 | 34.4 | 38.3 | 41.8 |
| **R404A** | | | | |
| NRVH 6 v2 | 0.0 | 0.1 | 0.5 | 0.7 |
| NRVH 10 v2 | 0.1 | 1.1 | 1.7 | 2.0 |
| NRVH 12 v2 | 1.8 | 2.5 | 2.8 | 3.1 |
| NRVH 16 v2 | 0.7 | 3.3 | 4.2 | 4.8 |
| NRVH 19 v2 | 4.6 | 6.6 | 7.3 | 8.0 |
| NRVH 22 | 7.5 | 8.6 | 9.6 | 10.5 |
| NRVH 28 | 14.5 | 16.7 | 18.6 | 20.3 |
| NRVH 35 | 25.5 | 29.3 | 32.7 | 35.7 |
| **R410A** | | | | |
| NRVH 6 v2 | 0.1 | 0.2 | 0.8 | 0.9 |
| NRVH 10 v2 | 0.2 | 1.5 | 2.4 | 2.9 |
| NRVH 12 v2 | 2.5 | 3.6 | 4.0 | 4.4 |
| NRVH 16 v2 | 1.0 | 4.7 | 6.0 | 6.8 |
| NRVH 19 v2 | 6.6 | 9.4 | 10.5 | 11.4 |
| NRVH 22 | 10.6 | 12.3 | 13.7 | 14.9 |
| NRVH 28 | 20.6 | 23.8 | 26.5 | 29.0 |
| NRVH 35 | 36.3 | 41.8 | 46.6 | 51.0 |

*1) Rated capacities are based on:*
*-Evaporating temperature, $t_e$ = 14 °F*
*-Condensing temperature, $t_c$ = 86 °F*
*-Subcooling $t_{sub}$ = 9 °F*
*-Superheat $t_{sh}$ = 0 °F*
*-Discharge temperature, $t_d$ =176 °F ahead of the valve.*
*The table values refer to the evaporator capacity.*

### Correction factors

When selecting the evaporator capacity is to be multiplied by a correction factor depending on the liquid temperature tl ahead of the valve/the evaporator. The corrected capacity can then be found from the table.

***System capacity·Correction factor=Table capacity***

### Correction factors for liquid temperature $t_l$

| $t_l$ [°F] | 15 | 32 | 50 | 60 | 70 | 80 | 86 | 95 | 105 | 115 | 125 |
|---|---|---|---|---|---|---|---|---|---|---|---|
| **R134a** | 0.74 | 0.79 | 0.86 | 0.91 | 0.96 | 1.02 | 1.08 | 1.16 | 1.24 | 1.34 | 1.46 |
| **R22** | 0.77 | 0.82 | 0.88 | 0.92 | 0.97 | 1.02 | 1.07 | 1.13 | 1.20 | 1.28 | 1.38 |
| **R404A** | 0.67 | 0.74 | 0.82 | 0.88 | 0.95 | 1.02 | 1.12 | 1.23 | 1.38 | 1.57 | 1.83 |
| **R410A** | 0.72 | 0.78 | 0.85 | 0.90 | 0.96 | 1.02 | 1.09 | 1.18 | 1.29 | 1.43 | 1.60 |

## Capacity

US units

**Liquid capacity [TR]**

| Type | Liquid capacity [1]) at pressure drop across valve Δp [psi] NRV | | | |
|---|---|---|---|---|
| | 0.7 | 1 | 2 | 3 |
| **R407A** | | | | |
| NRV 6 v2 | 0.3 | 1.2 | 3.0 | 4.0 |
| NRV 10 v2 | 2.0 | 4.9 | 8.0 | 9.8 |
| NRV 12 v2 | 7.2 | 8.6 | 12.2 | 14.9 |
| NRV 16 v2 | 10.3 | 13.7 | 19.4 | 23.8 |
| NRV 19 v2 | 18.7 | 22.3 | 31.6 | 38.7 |
| NRV 22 | 24.4 | 29.2 | 41.3 | 50.6 |
| NRV 28 | 47.5 | 56.7 | 80.2 | 98.2 |
| NRV 35 | 83.4 | 99.7 | 141.0 | 172.7 |
| **R407C** | | | | |
| NRV 6 v2 | 0.3 | 1.3 | 3.2 | 4.3 |
| NRV 10 v2 | 2.1 | 5.3 | 8.6 | 10.5 |
| NRV 12 v2 | 7.8 | 9.3 | 13.1 | 16.1 |
| NRV 16 v2 | 11.1 | 14.7 | 21.0 | 25.7 |
| NRV 19 v2 | 20.2 | 24.1 | 34.1 | 41.7 |
| NRV 22 | 26.4 | 31.5 | 44.6 | 54.6 |
| NRV 28 | 51.2 | 61.2 | 86.5 | 106.0 |
| NRV 35 | 90.0 | 107.5 | 152.1 | 186.3 |
| **R407F** | | | | |
| NRV 6 v2 | 0.3 | 1.3 | 3.2 | 4.4 |
| NRV 10 v2 | 2.1 | 5.4 | 8.7 | 10.7 |
| NRV 12 v2 | 7.9 | 9.4 | 13.3 | 16.3 |
| NRV 16 v2 | 11.2 | 15.0 | 21.3 | 26.1 |
| NRV 19 v2 | 20.5 | 24.5 | 34.6 | 42.4 |
| NRV 22 | 26.8 | 32.0 | 45.3 | 55.5 |
| NRV 28 | 52.0 | 62.1 | 87.9 | 107.6 |
| NRV 35 | 91.4 | 109.2 | 154.5 | 189.2 |
| **R407H** | | | | |
| NRV 6 v2 | 0.4 | 1.4 | 3.5 | 4.7 |
| NRV 10 v2 | 2.3 | 5.7 | 9.3 | 11.4 |
| NRV 12 v2 | 8.4 | 10.1 | 14.2 | 17.4 |
| NRV 16 v2 | 12.0 | 16.0 | 22.8 | 27.9 |
| NRV 19 v2 | 21.9 | 26.2 | 37.0 | 45.3 |
| NRV 22 | 28.6 | 34.2 | 48.4 | 59.3 |
| NRV 28 | 55.6 | 66.5 | 94.0 | 115.1 |
| NRV 35 | 97.7 | 116.8 | 165.2 | 202.3 |

**Suction vapour capacity [TR]**

| Pressure drop across valve Δp [psi] | Suction vapour capacity [1]) at evaporating temperature $t_e$ [°F] | | | |
|---|---|---|---|---|
| | -20 | 15 | 32 | 40 |
| **R407A** | | | | |
| 1 | 0.08 | 0.14 | 0.17 | 0.19 |
| 1 | 0.35 | 0.57 | 0.69 | 0.76 |
| 1 | 0.63 | 1.01 | 1.23 | 1.34 |
| 1 | 1.01 | 1.60 | 1.96 | 2.14 |
| 1 | 1.65 | 2.62 | 3.20 | 3.50 |
| 1 | 2.15 | 3.43 | 4.18 | 4.57 |
| 1 | 4.18 | 6.66 | 8.12 | 8.87 |
| 1 | 7.34 | 11.70 | 14.27 | 15.60 |
| **R407C** | | | | |
| 1 | 0.08 | 0.14 | 0.17 | 0.19 |
| 1 | 0.35 | 0.57 | 0.70 | 0.77 |
| 1 | 0.64 | 1.02 | 1.24 | 1.36 |
| 1 | 1.02 | 1.62 | 1.98 | 2.16 |
| 1 | 1.66 | 2.65 | 3.24 | 3.53 |
| 1 | 2.18 | 3.47 | 4.23 | 4.62 |
| 1 | 4.22 | 6.73 | 8.21 | 8.97 |
| 1 | 7.42 | 11.83 | 14.43 | 15.77 |
| **R407F** | | | | |
| 1 | 0.09 | 0.15 | 0.18 | 0.20 |
| 1 | 0.38 | 0.62 | 0.75 | 0.82 |
| 1 | 0.70 | 1.10 | 1.33 | 1.45 |
| 1 | 1.11 | 1.74 | 2.12 | 2.31 |
| 1 | 1.81 | 2.85 | 3.46 | 3.77 |
| 1 | 2.36 | 3.72 | 4.52 | 4.93 |
| 1 | 4.59 | 7.23 | 8.78 | 9.57 |
| 1 | 8.07 | 12.71 | 15.43 | 16.82 |
| **R407H** | | | | |
| 1 | 0.09 | 0.15 | 0.18 | 0.20 |
| 1 | 0.38 | 0.62 | 0.75 | 0.82 |
| 1 | 0.70 | 1.10 | 1.33 | 1.45 |
| 1 | 1.11 | 1.75 | 2.12 | 2.31 |
| 1 | 1.81 | 2.86 | 3.47 | 3.78 |
| 1 | 2.37 | 3.73 | 4.54 | 4.95 |
| 1 | 4.59 | 7.25 | 8.81 | 9.60 |
| 1 | 8.07 | 12.74 | 15.48 | 16.88 |

**Hot gas capacity [TR]**

| Hot gas capacity [1]) at pressure drop across valve Δp [psi] NRV | | | |
|---|---|---|---|
| 0.7 | 1 | 2 | 4 |
| **R407A** | | | |
| 0.1 | 0.2 | 0.5 | 0.8 |
| 0.3 | 0.9 | 1.4 | 2.0 |
| 1.3 | 1.5 | 2.1 | 3.0 |
| 1.8 | 2.4 | 3.4 | 4.8 |
| 3.3 | 4.0 | 5.6 | 7.9 |
| 4.3 | 5.2 | 7.3 | 10.3 |
| 8.4 | 10.1 | 14.2 | 19.9 |
| 14.8 | 17.7 | 24.9 | 35.1 |
| **R407C** | | | |
| 0.1 | 0.2 | 0.5 | 0.8 |
| 0.4 | 0.9 | 1.5 | 2.0 |
| 1.3 | 1.6 | 2.2 | 3.1 |
| 1.9 | 2.5 | 3.5 | 5.0 |
| 3.4 | 4.1 | 5.8 | 8.1 |
| 4.5 | 5.3 | 7.5 | 10.6 |
| 8.7 | 10.4 | 14.6 | 20.6 |
| 15.3 | 18.2 | 25.7 | 36.1 |
| **R407F** | | | |
| 0.1 | 0.2 | 0.6 | 0.9 |
| 0.4 | 0.9 | 1.5 | 2.1 |
| 1.4 | 1.7 | 2.3 | 3.3 |
| 2.0 | 2.6 | 3.7 | 5.2 |
| 3.6 | 4.3 | 6.1 | 8.5 |
| 4.7 | 5.6 | 7.9 | 11.1 |
| 9.1 | 10.9 | 15.4 | 21.6 |
| 16.0 | 19.2 | 27.0 | 38.0 |
| **R407H** | | | |
| 0.1 | 0.2 | 0.6 | 0.9 |
| 0.4 | 1.0 | 1.6 | 2.2 |
| 1.4 | 1.7 | 2.4 | 3.3 |
| 2.0 | 2.7 | 3.8 | 5.4 |
| 3.7 | 4.4 | 6.2 | 8.7 |
| 4.8 | 5.7 | 8.1 | 11.4 |
| 9.3 | 11.2 | 15.7 | 22.1 |
| 16.4 | 19.6 | 27.6 | 38.8 |

**Hot gas capacity [TR]**

| Type | Hot gas capacity [1]) at pressure drop across valve Δp [psi] NRVH | | | |
|---|---|---|---|---|
| | 3 | 4 | 5 | 6 |
| **R407A** | | | | |
| NRVH 6 v2 | 0.0 | 0.2 | 0.6 | 0.8 |
| NRVH 10 v2 | 0.1 | 1.3 | 2.0 | 2.4 |
| NRVH 12 v2 | 2.1 | 3.0 | 3.4 | 3.7 |
| NRVH 16 v2 | 0.9 | 4.0 | 5.0 | 5.7 |
| NRVH 19 v2 | 5.5 | 7.9 | 8.8 | 9.6 |
| NRVH 22 | 8.9 | 10.3 | 11.5 | 12.5 |
| NRVH 28 | 17.3 | 19.9 | 22.2 | 24.3 |
| NRVH 35 | 30.4 | 35.1 | 39.1 | 42.7 |
| **R407C** | | | | |
| NRVH 6 v2 | 0.0 | 0.2 | 0.7 | 0.8 |
| NRVH 10 v2 | 0.2 | 1.3 | 2.1 | 2.5 |
| NRVH 12 v2 | 2.2 | 3.1 | 3.5 | 3.8 |
| NRVH 16 v2 | 0.9 | 4.1 | 5.1 | 5.9 |
| NRVH 19 v2 | 5.7 | 8.1 | 9.0 | 9.9 |
| NRVH 22 | 9.2 | 10.6 | 11.8 | 12.9 |
| NRVH 28 | 17.9 | 20.6 | 22.9 | 25.0 |
| NRVH 35 | 31.4 | 36.1 | 40.3 | 44.0 |
| **R407F** | | | | |
| NRVH 6 v2 | 0.0 | 0.2 | 0.7 | 0.8 |
| NRVH 10 v2 | 0.2 | 1.4 | 2.2 | 2.6 |
| NRVH 12 v2 | 2.3 | 3.3 | 3.7 | 4.0 |
| NRVH 16 v2 | 0.9 | 4.3 | 5.4 | 6.2 |
| NRVH 19 v2 | 6.0 | 8.5 | 9.5 | 10.4 |
| NRVH 22 | 9.7 | 11.1 | 12.4 | 13.6 |
| NRVH 28 | 18.8 | 21.6 | 24.1 | 26.3 |
| NRVH 35 | 33.0 | 38.0 | 42.4 | 46.3 |
| **R407H** | | | | |
| NRVH 6 v2 | 0.0 | 0.2 | 0.7 | 0.9 |
| NRVH 10 v2 | 0.2 | 1.4 | 2.2 | 2.7 |
| NRVH 12 v2 | 2.3 | 3.3 | 3.7 | 4.1 |
| NRVH 16 v2 | 1.0 | 4.4 | 5.5 | 6.3 |
| NRVH 19 v2 | 6.1 | 8.7 | 9.7 | 10.6 |
| NRVH 22 | 9.9 | 11.4 | 12.7 | 13.9 |
| NRVH 28 | 19.2 | 22.1 | 24.6 | 26.9 |
| NRVH 35 | 33.7 | 38.8 | 43.3 | 47.3 |

*1) Rated capacities are based on:*
*-Evaporating temperature, $t_e$ = 14 °F*
*-Condensing temperature, $t_c$ = 86 °F*
*-Subcooling $t_{sub}$ = 9 °F*
*-Superheat $t_{sh}$ = 0 °F*
*-Discharge temperature, $t_d$ =176 °F ahead of the valve.*
*The table values refer to the evaporator capacity.*

### Correction factors

When selecting the evaporator capacity is to be multiplied by a correction factor depending on the liquid temperature tl ahead of the valve/the evaporator. The corrected capacity can then be found from the table.

***System capacity·Correction factor=Table capacity***

### Correction factors for liquid temperature $t_l$

| $t_l$ [°F] | 15 | 32 | 50 | 60 | 70 | 80 | 86 | 95 | 105 | 115 | 125 |
|---|---|---|---|---|---|---|---|---|---|---|---|
| **R407A** | 0.72 | 0.78 | 0.85 | 0.90 | 0.96 | 1.02 | 1.09 | 1.18 | 1.28 | 1.41 | 1.56 |
| **R407C** | 0.73 | 0.79 | 0.86 | 0.91 | 0.96 | 1.02 | 1.09 | 1.17 | 1.26 | 1.37 | 1.51 |
| **R407F** | 0.73 | 0.79 | 0.86 | 0.91 | 0.96 | 1.02 | 1.09 | 1.17 | 1.26 | 1.38 | 1.52 |
| **R407H** | 0.74 | 0.80 | 0.87 | 0.91 | 0.96 | 1.02 | 1.08 | 1.16 | 1.24 | 1.35 | 1.47 |

## Capacity

US units

**Liquid capacity [TR]**

| Type | Liquid capacity [1]) at pressure drop across valve Δp [psi] NRV | | | |
|---|---|---|---|---|
| | 0.7 | 1 | 2 | 3 |
| **R448A** | | | | |
| NRV 6 v2 | 0.3 | 1.2 | 3.0 | 4.0 |
| NRV 10 v2 | 2.0 | 4.9 | 8.0 | 9.8 |
| NRV 12 v2 | 7.2 | 8.6 | 12.2 | 14.9 |
| NRV 16 v2 | 10.3 | 13.7 | 19.5 | 23.9 |
| NRV 19 v2 | 18.7 | 22.4 | 31.7 | 38.8 |
| NRV 22 | 24.5 | 29.3 | 41.4 | 50.7 |
| NRV 28 | 47.6 | 56.8 | 80.4 | 98.5 |
| NRV 35 | 83.6 | 99.9 | 141.3 | 173.0 |
| **R449A** | | | | |
| NRV 6 v2 | 0.3 | 1.2 | 2.9 | 3.9 |
| NRV 10 v2 | 1.9 | 4.8 | 7.9 | 9.7 |
| NRV 12 v2 | 7.1 | 8.5 | 12.0 | 14.7 |
| NRV 16 v2 | 10.2 | 13.5 | 19.3 | 23.6 |
| NRV 19 v2 | 18.5 | 22.1 | 31.3 | 38.3 |
| NRV 22 | 24.2 | 28.9 | 40.9 | 50.1 |
| NRV 28 | 47.0 | 56.2 | 79.4 | 97.3 |
| NRV 35 | 82.6 | 98.7 | 139.6 | 170.9 |
| **R449B** | | | | |
| NRV 6 v2 | 0.3 | 1.2 | 3.0 | 4.0 |
| NRV 10 v2 | 2.0 | 4.9 | 8.0 | 9.8 |
| NRV 12 v2 | 7.2 | 8.6 | 12.2 | 14.9 |
| NRV 16 v2 | 10.3 | 13.7 | 19.5 | 23.9 |
| NRV 19 v2 | 18.8 | 22.4 | 31.7 | 38.8 |
| NRV 22 | 24.5 | 29.3 | 41.5 | 50.8 |
| NRV 28 | 47.6 | 56.9 | 80.5 | 98.6 |
| NRV 35 | 83.7 | 100.1 | 141.5 | 173.3 |
| **R450A** | | | | |
| NRV 6 v2 | 0.3 | 1.2 | 2.9 | 3.9 |
| NRV 10 v2 | 1.9 | 4.7 | 7.7 | 9.5 |
| NRV 12 v2 | 7.0 | 8.3 | 11.8 | 14.4 |
| NRV 16 v2 | 9.9 | 13.3 | 18.8 | 23.1 |
| NRV 19 v2 | 18.1 | 21.7 | 30.6 | 37.5 |
| NRV 22 | 23.7 | 28.3 | 40.0 | 49.0 |
| NRV 28 | 46.0 | 55.0 | 77.7 | 95.2 |
| NRV 35 | 80.8 | 96.6 | 136.6 | 167.3 |

**Suction vapour capacity [TR]**

| Pressure drop across valve Δp [psi] | Suction vapour capacity [1]) at evaporating temperature $t_e$ [°F] | | | |
|---|---|---|---|---|
| | -20 | 15 | 32 | 40 |
| **R448A** | | | | |
| 1 | 0.09 | 0.14 | 0.17 | 0.19 |
| 1 | 0.36 | 0.58 | 0.71 | 0.77 |
| 1 | 0.65 | 1.03 | 1.26 | 1.37 |
| 1 | 1.04 | 1.64 | 2.00 | 2.18 |
| 1 | 1.70 | 2.69 | 3.27 | 3.57 |
| 1 | 2.23 | 3.51 | 4.27 | 4.66 |
| 1 | 4.32 | 6.82 | 8.30 | 9.05 |
| 1 | 7.59 | 11.99 | 14.58 | 15.91 |
| **R449A** | | | | |
| 1 | 0.09 | 0.14 | 0.17 | 0.19 |
| 1 | 0.36 | 0.58 | 0.70 | 0.77 |
| 1 | 0.65 | 1.03 | 1.25 | 1.36 |
| 1 | 1.03 | 1.63 | 1.99 | 2.17 |
| 1 | 1.69 | 2.67 | 3.25 | 3.54 |
| 1 | 2.21 | 3.49 | 4.24 | 4.63 |
| 1 | 4.29 | 6.77 | 8.24 | 8.99 |
| 1 | 7.54 | 11.90 | 14.48 | 15.80 |
| **R449B** | | | | |
| 1 | 0.09 | 0.14 | 0.17 | 0.19 |
| 1 | 0.36 | 0.58 | 0.71 | 0.78 |
| 1 | 0.66 | 1.04 | 1.26 | 1.37 |
| 1 | 1.04 | 1.65 | 2.00 | 2.19 |
| 1 | 1.71 | 2.69 | 3.27 | 3.57 |
| 1 | 2.23 | 3.52 | 4.28 | 4.67 |
| 1 | 4.33 | 6.84 | 8.31 | 9.07 |
| 1 | 7.62 | 12.02 | 14.61 | 15.94 |
| **R450A** | | | | |
| 1 | 0.05 | 0.10 | 0.12 | 0.14 |
| 1 | 0.23 | 0.40 | 0.50 | 0.56 |
| 1 | 0.43 | 0.73 | 0.90 | 1.00 |
| 1 | 0.68 | 1.15 | 1.44 | 1.58 |
| 1 | 1.12 | 1.89 | 2.35 | 2.59 |
| 1 | 1.46 | 2.47 | 3.07 | 3.39 |
| 1 | 2.84 | 4.79 | 5.97 | 6.57 |
| 1 | 4.99 | 8.42 | 10.48 | 11.56 |

**Hot gas capacity [TR]**

| Hot gas capacity [1]) at pressure drop across valve Δp [psi] NRV | | | |
|---|---|---|---|
| 0.7 | 1 | 2 | 4 |
| **R448A** | | | |
| 0.1 | 0.2 | 0.5 | 0.8 |
| 0.4 | 0.9 | 1.4 | 2.0 |
| 1.3 | 1.5 | 2.2 | 3.1 |
| 1.8 | 2.5 | 3.5 | 4.9 |
| 3.4 | 4.0 | 5.7 | 8.0 |
| 4.4 | 5.3 | 7.4 | 10.4 |
| 8.6 | 10.2 | 14.4 | 20.3 |
| 15.1 | 18.0 | 25.3 | 35.6 |
| **R449A** | | | |
| 0.1 | 0.2 | 0.5 | 0.8 |
| 0.3 | 0.9 | 1.4 | 2.0 |
| 1.3 | 1.5 | 2.2 | 3.0 |
| 1.8 | 2.4 | 3.4 | 4.8 |
| 3.3 | 4.0 | 5.6 | 7.9 |
| 4.3 | 5.2 | 7.3 | 10.3 |
| 8.4 | 10.1 | 14.2 | 20.0 |
| 14.8 | 17.7 | 25.0 | 35.1 |
| **R449B** | | | |
| 0.1 | 0.2 | 0.5 | 0.8 |
| 0.4 | 0.9 | 1.4 | 2.0 |
| 1.3 | 1.5 | 2.2 | 3.1 |
| 1.8 | 2.5 | 3.5 | 4.9 |
| 3.4 | 4.0 | 5.7 | 8.0 |
| 4.4 | 5.2 | 7.4 | 10.4 |
| 8.5 | 10.2 | 14.4 | 20.2 |
| 15.0 | 17.9 | 25.2 | 35.5 |
| **R450A** | | | |
| 0.0 | 0.2 | 0.4 | 0.6 |
| 0.2 | 0.6 | 1.0 | 1.4 |
| 0.9 | 1.1 | 1.5 | 2.1 |
| 1.3 | 1.7 | 2.5 | 3.4 |
| 2.4 | 2.8 | 4.0 | 5.6 |
| 3.1 | 3.7 | 5.2 | 7.3 |
| 6.1 | 7.2 | 10.1 | 14.2 |
| 10.6 | 12.7 | 17.8 | 24.9 |

**Hot gas capacity [TR]**

| Type | Hot gas capacity [1]) at pressure drop across valve Δp [psi] NRVH | | | |
|---|---|---|---|---|
| | 3 | 4 | 5 | 6 |
| **R448A** | | | | |
| NRVH 6 v2 | 0.0 | 0.2 | 0.6 | 0.8 |
| NRVH 10 v2 | 0.1 | 1.3 | 2.0 | 2.5 |
| NRVH 12 v2 | 2.1 | 3.1 | 3.4 | 3.7 |
| NRVH 16 v2 | 0.9 | 4.0 | 5.1 | 5.8 |
| NRVH 19 v2 | 5.6 | 8.0 | 8.9 | 9.7 |
| NRVH 22 | 9.1 | 10.4 | 11.6 | 12.7 |
| NRVH 28 | 17.6 | 20.3 | 22.6 | 24.7 |
| NRVH 35 | 30.9 | 35.6 | 39.7 | 43.4 |
| **R449A** | | | | |
| NRVH 6 v2 | 0.0 | 0.2 | 0.6 | 0.8 |
| NRVH 10 v2 | 0.1 | 1.3 | 2.0 | 2.4 |
| NRVH 12 v2 | 2.1 | 3.0 | 3.4 | 3.7 |
| NRVH 16 v2 | 0.9 | 4.0 | 5.0 | 5.7 |
| NRVH 19 v2 | 5.5 | 7.9 | 8.8 | 9.6 |
| NRVH 22 | 8.9 | 10.3 | 11.5 | 12.5 |
| NRVH 28 | 17.4 | 20.0 | 22.3 | 24.3 |
| NRVH 35 | 30.5 | 35.1 | 39.1 | 42.7 |
| **R449B** | | | | |
| NRVH 6 v2 | 0.0 | 0.2 | 0.6 | 0.8 |
| NRVH 10 v2 | 0.1 | 1.3 | 2.0 | 2.4 |
| NRVH 12 v2 | 2.1 | 3.1 | 3.4 | 3.7 |
| NRVH 16 v2 | 0.9 | 4.0 | 5.0 | 5.8 |
| NRVH 19 v2 | 5.6 | 8.0 | 8.9 | 9.7 |
| NRVH 22 | 9.0 | 10.4 | 11.6 | 12.7 |
| NRVH 28 | 17.5 | 20.2 | 22.5 | 24.6 |
| NRVH 35 | 30.8 | 35.5 | 39.6 | 43.2 |
| **R450A** | | | | |
| NRVH 6 v2 | 0.0 | 0.1 | 0.4 | 0.5 |
| NRVH 10 v2 | 0.1 | 0.9 | 1.4 | 1.7 |
| NRVH 12 v2 | 1.5 | 2.1 | 2.4 | 2.6 |
| NRVH 16 v2 | 0.6 | 2.8 | 3.5 | 4.0 |
| NRVH 19 v2 | 3.9 | 5.6 | 6.2 | 6.7 |
| NRVH 22 | 6.4 | 7.3 | 8.1 | 8.8 |
| NRVH 28 | 12.3 | 14.2 | 15.7 | 17.1 |
| NRVH 35 | 21.7 | 24.9 | 27.6 | 30.1 |

*1) Rated capacities are based on:*
*-Evaporating temperature, $t_e$ = 14 °F*
*-Condensing temperature, $t_c$ = 86 °F*
*-Subcooling $t_{sub}$ = 9 °F*
*-Superheat $t_{sh}$ = 0 °F*
*-Discharge temperature, $t_d$ =176 °F ahead of the valve.*
*The table values refer to the evaporator capacity.*

### Correction factors

When selecting the evaporator capacity is to be multiplied by a correction factor depending on the liquid temperature tl ahead of the valve/the evaporator. The corrected capacity can then be found from the table.

***System capacity·Correction factor=Table capacity***

### Correction factors for liquid temperature $t_l$

| $t_l$ [°F] | 15 | 32 | 50 | 60 | 70 | 80 | 86 | 95 | 105 | 115 | 125 |
|---|---|---|---|---|---|---|---|---|---|---|---|
| **R448A** | 0.72 | 0.78 | 0.85 | 0.90 | 0.96 | 1.02 | 1.09 | 1.18 | 1.28 | 1.41 | 1.56 |
| **R449A** | 0.72 | 0.77 | 0.85 | 0.90 | 0.96 | 1.02 | 1.09 | 1.18 | 1.29 | 1.41 | 1.57 |
| **R449B** | 0.72 | 0.78 | 0.85 | 0.90 | 0.96 | 1.02 | 1.09 | 1.18 | 1.28 | 1.41 | 1.56 |
| **R450A** | 0.73 | 0.79 | 0.86 | 0.91 | 0.96 | 1.02 | 1.09 | 1.16 | 1.25 | 1.36 | 1.49 |

## Capacity

US units

**Liquid capacity (kW)**

| Type | Liquid capacity [1] at pressure drop across valve Δp [bar] NRV | | | |
|---|---|---|---|---|
| | 0.05 | 0.07 | 0.14 | 0.2 |
| **R452A** | | | | |
| NRV 6 v2 | 0.2 | 0.9 | 2.3 | 3.1 |
| NRV 10 v2 | 1.5 | 3.8 | 6.2 | 7.6 |
| NRV 12 v2 | 5.6 | 6.6 | 9.4 | 11.5 |
| NRV 16 v2 | 7.9 | 10.6 | 15.0 | 18.4 |
| NRV 19 v2 | 14.5 | 17.3 | 24.4 | 29.9 |
| NRV 22 | 18.9 | 22.6 | 32.0 | 39.1 |
| NRV 28 | 36.7 | 43.9 | 62.0 | 76.0 |
| NRV 35 | 64.5 | 77.1 | 109.1 | 133.6 |
| **R513A** | | | | |
| NRV 6 v2 | 0.3 | 1.1 | 2.6 | 3.5 |
| NRV 10 v2 | 1.7 | 4.3 | 6.9 | 8.5 |
| NRV 12 v2 | 6.3 | 7.5 | 10.6 | 13.0 |
| NRV 16 v2 | 8.9 | 11.9 | 16.9 | 20.7 |
| NRV 19 v2 | 16.3 | 19.5 | 27.5 | 33.7 |
| NRV 22 | 21.3 | 25.4 | 36.0 | 44.1 |
| NRV 28 | 41.3 | 49.4 | 69.9 | 85.6 |
| NRV 35 | 72.6 | 86.8 | 122.8 | 150.4 |
| **R515B** | | | | |
| NRV 6 v2 | 0.3 | 1.1 | 2.7 | 3.6 |
| NRV 10 v2 | 1.8 | 4.4 | 7.2 | 8.9 |
| NRV 12 v2 | 6.5 | 7.8 | 11.0 | 13.5 |
| NRV 16 v2 | 9.3 | 12.4 | 17.7 | 21.6 |
| NRV 19 v2 | 17.0 | 20.3 | 28.7 | 35.2 |
| NRV 22 | 22.2 | 26.5 | 37.5 | 46.0 |
| NRV 28 | 43.1 | 51.5 | 72.9 | 89.2 |
| NRV 35 | 75.8 | 90.6 | 128.1 | 156.8 |
| **R1233zd(E)** | | | | |
| NRV 6 v2 | 0.4 | 1.4 | 3.3 | 4.5 |
| NRV 10 v2 | 2.2 | 5.5 | 9.0 | 11.0 |
| NRV 12 v2 | 8.1 | 9.7 | 13.7 | 16.8 |
| NRV 16 v2 | 11.6 | 15.5 | 22.0 | 26.9 |
| NRV 19 v2 | 21.1 | 25.3 | 35.7 | 43.7 |
| NRV 22 | 27.6 | 33.0 | 46.7 | 57.2 |
| NRV 28 | 53.6 | 64.1 | 90.7 | 111.1 |
| NRV 35 | 94.3 | 112.7 | 159.4 | 195.2 |
| **R1234ze(E)** | | | | |
| NRV 6 v2 | 0.3 | 1.1 | 2.8 | 3.7 |
| NRV 10 v2 | 1.8 | 4.6 | 7.4 | 9.1 |
| NRV 12 v2 | 6.7 | 8.0 | 11.3 | 13.9 |
| NRV 16 v2 | 9.6 | 12.8 | 18.1 | 22.2 |
| NRV 19 v2 | 17.4 | 20.8 | 29.5 | 36.1 |
| NRV 22 | 22.8 | 27.3 | 38.5 | 47.2 |
| NRV 28 | 44.3 | 52.9 | 74.8 | 91.6 |
| NRV 35 | 77.8 | 93.0 | 131.5 | 161.1 |

**Suction vapour capacity in [kW]**

| Pressure drop across valve Δp [bar] | Suction vapour capacity [1] at evaporating temperature $t_e$ [°C] | | | |
|---|---|---|---|---|
| | -30 | -10 | 0 | 5 |
| **R452A** | | | | |
| 1 | 0.08 | 0.13 | 0.15 | 0.17 |
| 1 | 0.32 | 0.51 | 0.63 | 0.69 |
| 1 | 0.57 | 0.91 | 1.12 | 1.22 |
| 1 | 0.91 | 1.45 | 1.78 | 1.94 |
| 1 | 1.49 | 2.37 | 2.90 | 3.18 |
| 1 | 1.95 | 3.11 | 3.80 | 4.15 |
| 1 | 3.78 | 6.03 | 7.37 | 8.06 |
| 1 | 6.65 | 10.59 | 12.95 | 14.17 |
| **R513A** | | | | |
| 1 | 0.06 | 0.10 | 0.13 | 0.14 |
| 1 | 0.25 | 0.43 | 0.53 | 0.59 |
| 1 | 0.47 | 0.77 | 0.95 | 1.05 |
| 1 | 0.74 | 1.22 | 1.51 | 1.66 |
| 1 | 1.22 | 2.00 | 2.47 | 2.72 |
| 1 | 1.59 | 2.62 | 3.24 | 3.56 |
| 1 | 3.09 | 5.08 | 6.28 | 6.90 |
| 1 | 5.42 | 8.93 | 11.04 | 12.13 |
| **R515B** | | | | |
| 1 | 0.04 | 0.09 | 0.11 | 0.12 |
| 1 | 0.20 | 0.35 | 0.45 | 0.50 |
| 1 | 0.37 | 0.64 | 0.81 | 0.89 |
| 1 | 0.59 | 1.02 | 1.29 | 1.42 |
| 1 | 0.97 | 1.67 | 2.10 | 2.32 |
| 1 | 1.27 | 2.19 | 2.75 | 3.04 |
| 1 | 2.46 | 4.25 | 5.33 | 5.90 |
| 1 | 4.32 | 7.47 | 9.37 | 10.37 |
| **R1233zd(E)** | | | | |
| 1 | 0.01 | 0.03 | 0.05 | 0.06 |
| 1 | 0.05 | 0.15 | 0.22 | 0.26 |
| 1 | 0.13 | 0.32 | 0.43 | 0.49 |
| 1 | 0.20 | 0.51 | 0.69 | 0.78 |
| 1 | 0.33 | 0.83 | 1.13 | 1.28 |
| 1 | 0.44 | 1.09 | 1.48 | 1.67 |
| 1 | 0.85 | 2.12 | 2.86 | 3.25 |
| 1 | 1.49 | 3.72 | 5.03 | 5.71 |
| **R1234ze(E)** | | | | |
| 1 | 0.05 | 0.09 | 0.11 | 0.12 |
| 1 | 0.20 | 0.36 | 0.46 | 0.51 |
| 1 | 0.38 | 0.66 | 0.83 | 0.91 |
| 1 | 0.61 | 1.05 | 1.31 | 1.45 |
| 1 | 1.00 | 1.71 | 2.15 | 2.37 |
| 1 | 1.30 | 2.24 | 2.81 | 3.10 |
| 1 | 2.53 | 4.35 | 5.45 | 6.02 |
| 1 | 4.44 | 7.64 | 9.58 | 10.59 |

**Hot gas capacity in [kW]**

| Hot gas capacity [1] at pressure drop across valve Δp [bar] NRV | | | |
|---|---|---|---|
| 0.05 | 0.07 | 0.14 | 0.2 |
| **R452A** | | | |
| 0.0 | 0.2 | 0.4 | 0.7 |
| 0.3 | 0.7 | 1.2 | 1.7 |
| 1.1 | 1.3 | 1.8 | 2.6 |
| 1.6 | 2.1 | 2.9 | 4.1 |
| 2.8 | 3.4 | 4.8 | 6.7 |
| 3.7 | 4.4 | 6.3 | 8.8 |
| 7.2 | 8.6 | 12.1 | 17.1 |
| 12.7 | 15.1 | 21.4 | 30.0 |
| **R513A** | | | |
| 0.0 | 0.2 | 0.4 | 0.6 |
| 0.2 | 0.6 | 1.0 | 1.4 |
| 0.9 | 1.1 | 1.5 | 2.2 |
| 1.3 | 1.8 | 2.5 | 3.5 |
| 2.4 | 2.9 | 4.0 | 5.6 |
| 3.1 | 3.7 | 5.3 | 7.4 |
| 6.1 | 7.3 | 10.2 | 14.3 |
| 10.7 | 12.8 | 18.0 | 25.1 |
| **R515B** | | | |
| 0.0 | 0.1 | 0.3 | 0.5 |
| 0.2 | 0.5 | 0.9 | 1.2 |
| 0.8 | 1.0 | 1.4 | 1.9 |
| 1.2 | 1.5 | 2.2 | 3.0 |
| 2.1 | 2.5 | 3.6 | 4.9 |
| 2.8 | 3.3 | 4.6 | 6.5 |
| 5.4 | 6.4 | 9.0 | 12.6 |
| 9.5 | 11.3 | 15.9 | 22.1 |
| **R1233zd(E)** | | | |
| 0.0 | 0.1 | 0.2 | 0.3 |
| 0.1 | 0.3 | 0.6 | 0.7 |
| 0.5 | 0.6 | 0.9 | 1.1 |
| 0.7 | 1.0 | 1.4 | 1.8 |
| 1.4 | 1.6 | 2.2 | 2.9 |
| 1.8 | 2.1 | 2.9 | 3.8 |
| 3.5 | 4.1 | 5.6 | 7.5 |
| 6.1 | 7.2 | 9.9 | 13.1 |
| **R1234ze(E)** | | | |
| 0.0 | 0.1 | 0.3 | 0.5 |
| 0.2 | 0.6 | 0.9 | 1.3 |
| 0.8 | 1.0 | 1.4 | 1.9 |
| 1.2 | 1.6 | 2.2 | 3.1 |
| 2.2 | 2.6 | 3.6 | 5.1 |
| 2.8 | 3.4 | 4.8 | 6.6 |
| 5.5 | 6.6 | 9.2 | 12.8 |
| 9.7 | 11.6 | 16.2 | 22.6 |

**Hot gas capacity in [kW]**

| Type | Hot gas capacity [1] at pressure drop across valve Δp [bar] NRVH | | | |
|---|---|---|---|---|
| | 0.2 | 0.25 | 0.3 | 0.35 |
| **R452A** | | | | |
| NRVH 6 v2 | 0.0 | 0.2 | 0.5 | 0.7 |
| NRVH 10 v2 | 0.1 | 1.1 | 1.7 | 2.1 |
| NRVH 12 v2 | 1.8 | 2.6 | 2.9 | 3.2 |
| NRVH 16 v2 | 0.7 | 3.4 | 4.3 | 4.9 |
| NRVH 19 v2 | 4.7 | 6.7 | 7.5 | 8.2 |
| NRVH 22 | 7.6 | 8.8 | 9.8 | 10.7 |
| NRVH 28 | 14.8 | 17.1 | 19.0 | 20.8 |
| NRVH 35 | 26.1 | 30.0 | 33.5 | 36.5 |
| **R513A** | | | | |
| NRVH 6 v2 | 0.0 | 0.1 | 0.5 | 0.6 |
| NRVH 10 v2 | 0.1 | 0.9 | 1.4 | 1.7 |
| NRVH 12 v2 | 1.5 | 2.2 | 2.4 | 2.6 |
| NRVH 16 v2 | 0.6 | 2.8 | 3.5 | 4.0 |
| NRVH 19 v2 | 4.0 | 5.6 | 6.3 | 6.8 |
| NRVH 22 | 6.4 | 7.4 | 8.2 | 8.9 |
| NRVH 28 | 12.4 | 14.3 | 15.9 | 17.3 |
| NRVH 35 | 21.9 | 25.1 | 27.9 | 30.4 |
| **R515B** | | | | |
| NRVH 6 v2 | 0.0 | 0.1 | 0.4 | 0.5 |
| NRVH 10 v2 | 0.1 | 0.8 | 1.2 | 1.5 |
| NRVH 12 v2 | 1.3 | 1.9 | 2.1 | 2.3 |
| NRVH 16 v2 | 0.5 | 2.5 | 3.1 | 3.5 |
| NRVH 19 v2 | 3.5 | 4.9 | 5.5 | 6.0 |
| NRVH 22 | 5.6 | 6.5 | 7.2 | 7.8 |
| NRVH 28 | 11.0 | 12.6 | 13.9 | 15.1 |
| NRVH 35 | 19.3 | 22.1 | 24.5 | 26.6 |
| **R1233zd(E)** | | | | |
| NRVH 6 v2 | 0.0 | 0.1 | 0.2 | 0.2 |
| NRVH 10 v2 | 0.1 | 0.4 | 0.7 | 0.8 |
| NRVH 12 v2 | 0.8 | 1.1 | 1.2 | 1.3 |
| NRVH 16 v2 | 0.3 | 1.3 | 1.7 | 1.9 |
| NRVH 19 v2 | 2.1 | 2.9 | 3.2 | 3.4 |
| NRVH 22 | 3.4 | 3.8 | 4.2 | 4.4 |
| NRVH 28 | 6.7 | 7.5 | 8.1 | 8.5 |
| NRVH 35 | 11.7 | 13.1 | 14.2 | 15.0 |
| **R1234ze(E)** | | | | |
| NRVH 6 v2 | 0.0 | 0.1 | 0.4 | 0.5 |
| NRVH 10 v2 | 0.1 | 0.8 | 1.3 | 1.5 |
| NRVH 12 v2 | 1.4 | 1.9 | 2.2 | 2.3 |
| NRVH 16 v2 | 0.5 | 2.5 | 3.2 | 3.6 |
| NRVH 19 v2 | 3.6 | 5.1 | 5.6 | 6.1 |
| NRVH 22 | 5.8 | 6.6 | 7.3 | 8.0 |
| NRVH 28 | 11.2 | 12.8 | 14.2 | 15.5 |
| NRVH 35 | 19.7 | 22.6 | 25.0 | 27.2 |

**Correction factors for liquid temperature $t_l$**

| $t_l$ [°F] | 15 | 32 | 50 | 60 | 70 | 80 | 86 | 95 | 105 | 115 | 125 |
|---|---|---|---|---|---|---|---|---|---|---|---|
| R452A | 0.68 | 0.74 | 0.83 | 0.88 | 0.95 | 1.02 | 1.12 | 1.23 | 1.37 | 1.54 | 1.79 |
| R513A | 0.71 | 0.77 | 0.85 | 0.90 | 0.96 | 1.02 | 1.10 | 1.18 | 1.29 | 1.41 | 1.57 |
| R515B | 0.72 | 0.78 | 0.86 | 0.90 | 0.96 | 1.02 | 1.09 | 1.17 | 1.26 | 1.37 | 1.51 |
| R1233zd(E) | 0.77 | 0.82 | 0.89 | 0.93 | 0.97 | 1.01 | 1.06 | 1.12 | 1.18 | 1.25 | 1.33 |
| R1234ze(E) | 0.72 | 0.78 | 0.86 | 0.91 | 0.96 | 1.02 | 1.09 | 1.17 | 1.26 | 1.36 | 1.49 |

## Capacity

US units

**Liquid capacity [TR]**

| Type | Liquid capacity [1]) at pressure drop across valve Δp [psi] | | | |
|---|---|---|---|---|
| | NRV | | | |
| | 0.7 | 1 | 2 | 3 |
| **R290** | | | | |
| NRV 6 v2 | 0.4 | 1.5 | 3.7 | 5.0 |
| NRV 10 v2 | 2.5 | 6.2 | 10.1 | 12.3 |
| NRV 12 v2 | 9.1 | 10.9 | 15.4 | 18.8 |
| NRV 16 v2 | 13.0 | 17.3 | 24.6 | 30.1 |
| NRV 19 v2 | 23.6 | 28.2 | 39.9 | 48.9 |
| NRV 22 | 30.9 | 36.9 | 52.2 | 63.9 |
| NRV 28 | 59.9 | 71.6 | 101.3 | 124.1 |
| NRV 35 | 105.3 | 125.9 | 178.1 | 218.1 |
| **R32** | | | | |
| NRV 6 v2 | 0.5 | 1.9 | 4.7 | 6.3 |
| NRV 10 v2 | 3.1 | 7.7 | 12.6 | 15.4 |
| NRV 12 v2 | 11.4 | 13.6 | 19.2 | 23.5 |
| NRV 16 v2 | 16.2 | 21.6 | 30.7 | 37.6 |
| NRV 19 v2 | 29.5 | 35.3 | 49.9 | 61.2 |
| NRV 22 | 38.6 | 46.2 | 65.3 | 80.0 |
| NRV 28 | 75.0 | 89.6 | 126.8 | 155.3 |
| NRV 35 | 131.8 | 157.6 | 222.8 | 272.9 |
| **R452B** | | | | |
| NRV 6 v2 | 0.4 | 1.5 | 3.7 | 5.1 |
| NRV 10 v2 | 2.5 | 6.2 | 10.1 | 12.4 |
| NRV 12 v2 | 9.1 | 10.9 | 15.4 | 18.9 |
| NRV 16 v2 | 13.0 | 17.3 | 24.7 | 30.2 |
| NRV 19 v2 | 23.7 | 28.3 | 40.1 | 49.1 |
| NRV 22 | 31.0 | 37.1 | 52.4 | 64.2 |
| NRV 28 | 60.2 | 71.9 | 101.7 | 124.6 |
| NRV 35 | 105.8 | 126.4 | 178.8 | 219.0 |
| **R455A** | | | | |
| NRV 6 v2 | 0.3 | 1.1 | 2.7 | 3.7 |
| NRV 10 v2 | 1.8 | 4.5 | 7.3 | 9.0 |
| NRV 12 v2 | 6.6 | 7.9 | 11.2 | 13.7 |
| NRV 16 v2 | 9.4 | 12.5 | 17.8 | 21.9 |
| NRV 19 v2 | 17.2 | 20.5 | 29.0 | 35.5 |
| NRV 22 | 22.4 | 26.8 | 37.9 | 46.4 |
| NRV 28 | 43.5 | 52.0 | 73.6 | 90.2 |
| NRV 35 | 76.5 | 91.5 | 129.4 | 158.5 |

**Suction vapour capacity [TR]**

| Pressure drop across valve Δp [psi] | Suction vapour capacity [1]) at evaporating temperature $t_e$ [°F] | | | |
|---|---|---|---|---|
| | -20 | 15 | 32 | 40 |
| **R290** | | | | |
| 1 | 0.12 | 0.19 | 0.22 | 0.24 |
| 1 | 0.49 | 0.76 | 0.91 | 0.99 |
| 1 | 0.89 | 1.35 | 1.62 | 1.76 |
| 1 | 1.41 | 2.15 | 2.57 | 2.79 |
| 1 | 2.31 | 3.51 | 4.21 | 4.56 |
| 1 | 3.02 | 4.59 | 5.50 | 5.97 |
| 1 | 5.85 | 8.90 | 10.68 | 11.58 |
| 1 | 10.29 | 15.65 | 18.77 | 20.36 |
| **R32** | | | | |
| 1 | 0.16 | 0.24 | 0.29 | 0.31 |
| 1 | 0.67 | 0.99 | 1.17 | 1.26 |
| 1 | 1.19 | 1.75 | 2.07 | 2.23 |
| 1 | 1.90 | 2.79 | 3.29 | 3.54 |
| 1 | 3.10 | 4.55 | 5.37 | 5.79 |
| 1 | 4.05 | 5.95 | 7.03 | 7.57 |
| 1 | 7.87 | 11.56 | 13.64 | 14.69 |
| 1 | 13.83 | 20.32 | 23.98 | 25.82 |
| **R452B** | | | | |
| 1 | 0.13 | 0.20 | 0.24 | 0.26 |
| 1 | 0.55 | 0.82 | 0.98 | 1.06 |
| 1 | 0.97 | 1.45 | 1.73 | 1.87 |
| 1 | 1.55 | 2.31 | 2.75 | 2.97 |
| 1 | 2.53 | 3.78 | 4.50 | 4.86 |
| 1 | 3.31 | 4.95 | 5.88 | 6.35 |
| 1 | 6.43 | 9.60 | 11.41 | 12.33 |
| 1 | 11.30 | 16.87 | 20.06 | 21.67 |
| **R455A** | | | | |
| 1 | 0.08 | 0.13 | 0.16 | 0.18 |
| 1 | 0.33 | 0.53 | 0.65 | 0.71 |
| 1 | 0.60 | 0.95 | 1.16 | 1.27 |
| 1 | 0.95 | 1.51 | 1.84 | 2.01 |
| 1 | 1.56 | 2.47 | 3.01 | 3.29 |
| 1 | 2.03 | 3.23 | 3.94 | 4.30 |
| 1 | 3.95 | 6.27 | 7.65 | 8.36 |
| 1 | 6.94 | 11.02 | 13.44 | 14.69 |

**Hot gas capacity [TR]**

| Hot gas capacity [1]) at pressure drop across valve Δp [psi] | | | |
|---|---|---|---|
| NRV | | | |
| 0.7 | 1 | 2 | 4 |
| **R290** | | | |
| 0.1 | 0.2 | 0.6 | 0.9 |
| 0.4 | 1.0 | 1.6 | 2.3 |
| 1.5 | 1.8 | 2.5 | 3.5 |
| 2.1 | 2.8 | 4.0 | 5.6 |
| 3.9 | 4.6 | 6.5 | 9.1 |
| 5.1 | 6.1 | 8.5 | 12.0 |
| 9.8 | 11.8 | 16.6 | 23.2 |
| 17.3 | 20.7 | 29.1 | 40.8 |
| **R32** | | | |
| 0.1 | 0.3 | 0.8 | 1.2 |
| 0.5 | 1.3 | 2.2 | 3.0 |
| 1.9 | 2.3 | 3.3 | 4.6 |
| 2.8 | 3.7 | 5.3 | 7.4 |
| 5.1 | 6.1 | 8.5 | 12.0 |
| 6.6 | 7.9 | 11.2 | 15.7 |
| 12.9 | 15.4 | 21.7 | 30.5 |
| 22.6 | 27.0 | 38.1 | 53.7 |
| **R452B** | | | |
| 0.1 | 0.3 | 0.7 | 1.0 |
| 0.4 | 1.1 | 1.8 | 2.6 |
| 1.6 | 2.0 | 2.8 | 3.9 |
| 2.3 | 3.1 | 4.4 | 6.3 |
| 4.3 | 5.1 | 7.2 | 10.2 |
| 5.6 | 6.7 | 9.4 | 13.3 |
| 10.9 | 13.0 | 18.3 | 25.8 |
| 19.1 | 22.8 | 32.2 | 45.3 |
| **R455A** | | | |
| 0.1 | 0.2 | 0.5 | 0.8 |
| 0.3 | 0.9 | 1.4 | 2.0 |
| 1.3 | 1.5 | 2.2 | 3.0 |
| 1.8 | 2.4 | 3.4 | 4.8 |
| 3.3 | 4.0 | 5.6 | 7.9 |
| 4.3 | 5.2 | 7.3 | 10.3 |
| 8.4 | 10.1 | 14.2 | 20.0 |
| 14.8 | 17.7 | 24.9 | 35.1 |

**Hot gas capacity [TR]**

| Type | Hot gas capacity [1]) at pressure drop across valve Δp [psi] | | | |
|---|---|---|---|---|
| | NRVH | | | |
| | 3 | 4 | 5 | 6 |
| **R290** | | | | |
| NRVH 6 v2 | 0.1 | 0.2 | 0.7 | 0.9 |
| NRVH 10 v2 | 0.2 | 1.5 | 2.3 | 2.8 |
| NRVH 12 v2 | 2.4 | 3.5 | 3.9 | 4.3 |
| NRVH 16 v2 | 1.0 | 4.6 | 5.8 | 6.6 |
| NRVH 19 v2 | 6.4 | 9.1 | 10.2 | 11.1 |
| NRVH 22 | 10.4 | 12.0 | 13.3 | 14.5 |
| NRVH 28 | 20.2 | 23.2 | 25.9 | 28.2 |
| NRVH 35 | 35.5 | 40.8 | 45.4 | 49.6 |
| **R32** | | | | |
| NRVH 6 v2 | 0.1 | 0.3 | 1.0 | 1.2 |
| NRVH 10 v2 | 0.2 | 1.9 | 3.1 | 3.7 |
| NRVH 12 v2 | 3.2 | 4.6 | 5.2 | 5.6 |
| NRVH 16 v2 | 1.3 | 6.1 | 7.6 | 8.7 |
| NRVH 19 v2 | 8.5 | 12.0 | 13.4 | 14.7 |
| NRVH 22 | 13.7 | 15.7 | 17.6 | 19.2 |
| NRVH 28 | 26.5 | 30.5 | 34.1 | 37.3 |
| NRVH 35 | 46.6 | 53.7 | 59.9 | 65.5 |
| **R452B** | | | | |
| NRVH 6 v2 | 0.1 | 0.2 | 0.8 | 1.0 |
| NRVH 10 v2 | 0.2 | 1.6 | 2.6 | 3.1 |
| NRVH 12 v2 | 2.7 | 3.9 | 4.4 | 4.8 |
| NRVH 16 v2 | 1.1 | 5.1 | 6.5 | 7.4 |
| NRVH 19 v2 | 7.2 | 10.2 | 11.3 | 12.4 |
| NRVH 22 | 11.5 | 13.3 | 14.8 | 16.2 |
| NRVH 28 | 22.4 | 25.8 | 28.8 | 31.4 |
| NRVH 35 | 39.3 | 45.3 | 50.5 | 55.2 |
| **R455A** | | | | |
| NRVH 6 v2 | 0.0 | 0.2 | 0.6 | 0.8 |
| NRVH 10 v2 | 0.1 | 1.3 | 2.0 | 2.4 |
| NRVH 12 v2 | 2.1 | 3.0 | 3.4 | 3.7 |
| NRVH 16 v2 | 0.9 | 4.0 | 5.0 | 5.7 |
| NRVH 19 v2 | 5.5 | 7.9 | 8.8 | 9.6 |
| NRVH 22 | 8.9 | 10.3 | 11.5 | 12.5 |
| NRVH 28 | 17.3 | 20.0 | 22.3 | 24.3 |
| NRVH 35 | 30.5 | 35.1 | 39.1 | 42.7 |

*1) Rated capacities are based on:*
*-Evaporating temperature, $t_e$ = 14 °F*
*-Condensing temperature, $t_c$ = 86 °F*
*-Subcooling $t_{sub}$ = 9 °F*
*-Superheat $t_{sh}$ = 0 °F*
*-Discharge temperature, $t_d$ =176 °F ahead of the valve.*
*The table values refer to the evaporator capacity.*

### Correction factors

When selecting the evaporator capacity is to be multiplied by a correction factor depending on the liquid temperature tl ahead of the valve/the evaporator. The corrected capacity can then be found from the table.

***System capacity·Correction factor=Table capacity***

### Correction factors for liquid temperature $t_l$

| $t_l$ [°F] | 15 | 32 | 50 | 60 | 70 | 80 | 86 | 95 | 105 | 115 | 125 |
|---|---|---|---|---|---|---|---|---|---|---|---|
| **R290** | 0.74 | 0.79 | 0.86 | 0.91 | 0.96 | 1.02 | 1.08 | 1.16 | 1.25 | 1.35 | 1.48 |
| **R32** | 0.76 | 0.82 | 0.88 | 0.92 | 0.97 | 1.02 | 1.07 | 1.14 | 1.22 | 1.31 | 1.42 |
| **R452B** | 0.74 | 0.80 | 0.86 | 0.91 | 0.96 | 1.02 | 1.08 | 1.16 | 1.25 | 1.36 | 1.50 |
| **R455A** | 0.70 | 0.77 | 0.84 | 0.90 | 0.95 | 1.02 | 1.10 | 1.19 | 1.30 | 1.44 | 1.61 |

## Capacity

US units

**Liquid capacity [TR]**

| Type | Liquid capacity [1]) at pressure drop across valve Δp [psi] | | | |
|---|---|---|---|---|
| | NRV | | | |
| | 0.7 | 1 | 2 | 3 |
| **R454A** | | | | |
| NRV 6 v2 | 0.3 | 1.2 | 3.0 | 4.0 |
| NRV 10 v2 | 2.0 | 4.9 | 8.0 | 9.8 |
| NRV 12 v2 | 7.2 | 8.6 | 12.2 | 14.9 |
| NRV 16 v2 | 10.3 | 13.7 | 19.5 | 23.8 |
| NRV 19 v2 | 18.7 | 22.4 | 31.6 | 38.7 |
| NRV 22 | 24.5 | 29.3 | 41.4 | 50.7 |
| NRV 28 | 47.5 | 56.8 | 80.3 | 98.4 |
| NRV 35 | 83.5 | 99.8 | 141.1 | 172.9 |
| **R454B** | | | | |
| NRV 6 v2 | 0.4 | 1.6 | 3.8 | 5.1 |
| NRV 10 v2 | 2.5 | 6.3 | 10.2 | 12.6 |
| NRV 12 v2 | 9.2 | 11.1 | 15.6 | 19.1 |
| NRV 16 v2 | 13.2 | 17.6 | 25.0 | 30.6 |
| NRV 19 v2 | 24.0 | 28.7 | 40.6 | 49.8 |
| NRV 22 | 31.4 | 37.6 | 53.2 | 65.1 |
| NRV 28 | 61.0 | 73.0 | 103.2 | 126.4 |
| NRV 35 | 107.3 | 128.2 | 181.3 | 222.1 |
| **R454C** | | | | |
| NRV 6 v2 | 0.3 | 1.1 | 2.7 | 3.6 |
| NRV 10 v2 | 1.8 | 4.4 | 7.2 | 8.8 |
| NRV 12 v2 | 6.5 | 7.8 | 11.0 | 13.4 |
| NRV 16 v2 | 9.3 | 12.3 | 17.6 | 21.5 |
| NRV 19 v2 | 16.9 | 20.2 | 28.5 | 35.0 |
| NRV 22 | 22.1 | 26.4 | 37.3 | 45.7 |
| NRV 28 | 42.9 | 51.2 | 72.4 | 88.7 |
| NRV 35 | 75.3 | 90.0 | 127.3 | 155.9 |
| **R516A** | | | | |
| NRV 6 v2 | 0.3 | 1.1 | 2.6 | 3.5 |
| NRV 10 v2 | 1.7 | 4.3 | 7.0 | 8.6 |
| NRV 12 v2 | 6.4 | 7.6 | 10.8 | 13.2 |
| NRV 16 v2 | 9.1 | 12.1 | 17.2 | 21.1 |
| NRV 19 v2 | 16.6 | 19.8 | 28.0 | 34.3 |
| NRV 22 | 21.7 | 25.9 | 36.6 | 44.8 |
| NRV 28 | 42.0 | 50.2 | 71.1 | 87.0 |
| NRV 35 | 73.9 | 88.3 | 124.9 | 153.0 |

**Suction vapour capacity [TR]**

| Pressure drop across valve Δp [psi] | Suction vapour capacity [1]) at evaporating temperature $t_e$ [°F] | | | |
|---|---|---|---|---|
| | -20 | 15 | 32 | 40 |
| **R454A** | | | | |
| 1 | 0.09 | 0.15 | 0.18 | 0.20 |
| 1 | 0.38 | 0.60 | 0.73 | 0.80 |
| 1 | 0.69 | 1.07 | 1.30 | 1.42 |
| 1 | 1.10 | 1.71 | 2.07 | 2.25 |
| 1 | 1.79 | 2.79 | 3.38 | 3.68 |
| 1 | 2.34 | 3.65 | 4.42 | 4.81 |
| 1 | 4.55 | 7.09 | 8.58 | 9.34 |
| 1 | 7.99 | 12.45 | 15.07 | 16.42 |
| **R454B** | | | | |
| 1 | 0.13 | 0.20 | 0.24 | 0.26 |
| 1 | 0.55 | 0.82 | 0.98 | 1.06 |
| 1 | 0.98 | 1.46 | 1.73 | 1.87 |
| 1 | 1.56 | 2.32 | 2.76 | 2.98 |
| 1 | 2.54 | 3.79 | 4.51 | 4.87 |
| 1 | 3.32 | 4.96 | 5.90 | 6.37 |
| 1 | 6.45 | 9.63 | 11.45 | 12.37 |
| 1 | 11.34 | 16.93 | 20.12 | 21.73 |
| **R454C** | | | | |
| 1 | 0.08 | 0.13 | 0.15 | 0.17 |
| 1 | 0.32 | 0.51 | 0.63 | 0.69 |
| 1 | 0.58 | 0.92 | 1.12 | 1.23 |
| 1 | 0.92 | 1.46 | 1.78 | 1.95 |
| 1 | 1.50 | 2.39 | 2.91 | 3.19 |
| 1 | 1.96 | 3.12 | 3.81 | 4.17 |
| 1 | 3.80 | 6.06 | 7.40 | 8.09 |
| 1 | 6.68 | 10.64 | 13.00 | 14.22 |
| **R516A** | | | | |
| 1 | 0.06 | 0.11 | 0.13 | 0.14 |
| 1 | 0.26 | 0.43 | 0.54 | 0.59 |
| 1 | 0.48 | 0.78 | 0.96 | 1.06 |
| 1 | 0.76 | 1.24 | 1.53 | 1.68 |
| 1 | 1.24 | 2.03 | 2.50 | 2.74 |
| 1 | 1.62 | 2.65 | 3.27 | 3.59 |
| 1 | 3.14 | 5.14 | 6.34 | 6.96 |
| 1 | 5.52 | 9.04 | 11.15 | 12.24 |

**Hot gas capacity [TR]**

| Type | Hot gas capacity [1]) at pressure drop across valve Δp [psi] | | | |
|---|---|---|---|---|
| | NRV | | | |
| | 0.7 | 1 | 2 | 4 |
| **R454A** | | | | |
| NRV 6 v2 | 0.1 | 0.2 | 0.5 | 0.8 |
| NRV 10 v2 | 0.4 | 0.9 | 1.5 | 2.1 |
| NRV 12 v2 | 1.3 | 1.6 | 2.2 | 3.1 |
| NRV 16 v2 | 1.9 | 2.5 | 3.6 | 5.0 |
| NRV 19 v2 | 3.5 | 4.1 | 5.8 | 8.2 |
| NRV 22 | 4.5 | 5.4 | 7.6 | 10.7 |
| NRV 28 | 8.8 | 10.5 | 14.8 | 20.7 |
| NRV 35 | 15.4 | 18.4 | 25.9 | 36.5 |
| **R454B** | | | | |
| NRV 6 v2 | 0.1 | 0.3 | 0.7 | 1.1 |
| NRV 10 v2 | 0.5 | 1.1 | 1.8 | 2.6 |
| NRV 12 v2 | 1.7 | 2.0 | 2.8 | 3.9 |
| NRV 16 v2 | 2.4 | 3.1 | 4.5 | 6.3 |
| NRV 19 v2 | 4.3 | 5.1 | 7.3 | 10.2 |
| NRV 22 | 5.6 | 6.7 | 9.5 | 13.4 |
| NRV 28 | 10.9 | 13.1 | 18.4 | 26.0 |
| NRV 35 | 19.2 | 23.0 | 32.4 | 45.6 |
| **R454C** | | | | |
| NRV 6 v2 | 0.1 | 0.2 | 0.5 | 0.7 |
| NRV 10 v2 | 0.3 | 0.8 | 1.3 | 1.8 |
| NRV 12 v2 | 1.2 | 1.4 | 2.0 | 2.8 |
| NRV 16 v2 | 1.7 | 2.2 | 3.2 | 4.5 |
| NRV 19 v2 | 3.1 | 3.7 | 5.2 | 7.3 |
| NRV 22 | 4.0 | 4.8 | 6.8 | 9.5 |
| NRV 28 | 7.8 | 9.3 | 13.1 | 18.5 |
| NRV 35 | 13.7 | 16.4 | 23.1 | 32.4 |
| **R516A** | | | | |
| NRV 6 v2 | 0.0 | 0.2 | 0.4 | 0.6 |
| NRV 10 v2 | 0.3 | 0.6 | 1.0 | 1.4 |
| NRV 12 v2 | 0.9 | 1.1 | 1.6 | 2.2 |
| NRV 16 v2 | 1.3 | 1.8 | 2.5 | 3.5 |
| NRV 19 v2 | 2.4 | 2.9 | 4.0 | 5.7 |
| NRV 22 | 3.2 | 3.8 | 5.3 | 7.4 |
| NRV 28 | 6.1 | 7.3 | 10.3 | 14.4 |
| NRV 35 | 10.8 | 12.8 | 18.1 | 25.3 |

**Hot gas capacity [TR]**

| Type | Hot gas capacity [1]) at pressure drop across valve Δp [psi] | | | |
|---|---|---|---|---|
| | NRVH | | | |
| | 3 | 4 | 5 | 6 |
| **R454A** | | | | |
| NRVH 6 v2 | 0.0 | 0.2 | 0.7 | 0.8 |
| NRVH 10 v2 | 0.2 | 1.3 | 2.1 | 2.5 |
| NRVH 12 v2 | 2.2 | 3.1 | 3.5 | 3.8 |
| NRVH 16 v2 | 0.9 | 4.1 | 5.2 | 5.9 |
| NRVH 19 v2 | 5.8 | 8.2 | 9.1 | 10.0 |
| NRVH 22 | 9.3 | 10.7 | 11.9 | 13.0 |
| NRVH 28 | 18.0 | 20.7 | 23.1 | 25.3 |
| NRVH 35 | 31.7 | 36.5 | 40.6 | 44.4 |
| **R454B** | | | | |
| NRVH 6 v2 | 0.1 | 0.2 | 0.8 | 1.0 |
| NRVH 10 v2 | 0.2 | 1.7 | 2.6 | 3.1 |
| NRVH 12 v2 | 2.7 | 3.9 | 4.4 | 4.8 |
| NRVH 16 v2 | 1.1 | 5.2 | 6.5 | 7.4 |
| NRVH 19 v2 | 7.2 | 10.2 | 11.4 | 12.5 |
| NRVH 22 | 11.6 | 13.4 | 14.9 | 16.3 |
| NRVH 28 | 22.5 | 26.0 | 28.9 | 31.6 |
| NRVH 35 | 39.6 | 45.6 | 50.9 | 55.6 |
| **R454C** | | | | |
| NRVH 6 v2 | 0.0 | 0.2 | 0.6 | 0.7 |
| NRVH 10 v2 | 0.1 | 1.2 | 1.9 | 2.2 |
| NRVH 12 v2 | 1.9 | 2.8 | 3.1 | 3.4 |
| NRVH 16 v2 | 0.8 | 3.7 | 4.6 | 5.3 |
| NRVH 19 v2 | 5.1 | 7.3 | 8.1 | 8.8 |
| NRVH 22 | 8.3 | 9.5 | 10.6 | 11.6 |
| NRVH 28 | 16.0 | 18.5 | 20.6 | 22.5 |
| NRVH 35 | 28.2 | 32.4 | 36.2 | 39.5 |
| **R516A** | | | | |
| NRVH 6 v2 | 0.0 | 0.1 | 0.5 | 0.6 |
| NRVH 10 v2 | 0.1 | 0.9 | 1.4 | 1.7 |
| NRVH 12 v2 | 1.5 | 2.2 | 2.4 | 2.6 |
| NRVH 16 v2 | 0.6 | 2.8 | 3.6 | 4.1 |
| NRVH 19 v2 | 4.0 | 5.7 | 6.3 | 6.9 |
| NRVH 22 | 6.4 | 7.4 | 8.2 | 9.0 |
| NRVH 28 | 12.5 | 14.4 | 16.0 | 17.4 |
| NRVH 35 | 22.0 | 25.3 | 28.1 | 30.6 |

*1) Rated capacities are based on:*
*-Evaporating temperature, $t_e$ = 14 °F*
*-Condensing temperature, $t_c$ = 86 °F*
*-Subcooling $t_{sub}$ = 9 °F*
*-Superheat $t_{sh}$ = 0 °F*
*-Discharge temperature, $t_d$ =176 °F ahead of the valve.*
*The table values refer to the evaporator capacity.*

### Correction factors

When selecting the evaporator capacity is to be multiplied by a correction factor depending on the liquid temperature tl ahead of the valve/the evaporator. The corrected capacity can then be found from the table.

***System capacity·Correction factor=Table capacity***

### Correction factors for liquid temperature $t_l$

| $t_l$ [°F] | 15 | 32 | 50 | 60 | 70 | 80 | 86 | 95 | 105 | 115 | 125 |
|---|---|---|---|---|---|---|---|---|---|---|---|
| **R454A** | 0.71 | 0.77 | 0.85 | 0.90 | 0.96 | 1.02 | 1.09 | 1.18 | 1.29 | 1.42 | 1.58 |
| **R454B** | 0.74 | 0.80 | 0.87 | 0.91 | 0.96 | 1.02 | 1.08 | 1.16 | 1.25 | 1.35 | 1.49 |
| **R454C** | 0.70 | 0.77 | 0.84 | 0.90 | 0.95 | 1.02 | 1.10 | 1.19 | 1.30 | 1.44 | 1.61 |
| **R516A** | 0.71 | 0.77 | 0.85 | 0.90 | 0.96 | 1.02 | 1.09 | 1.18 | 1.28 | 1.40 | 1.55 |

## Capacity

US units

**Liquid capacity [TR]**

| Type | Liquid capacity [1]) at pressure drop across valve Δp [psi] NRV | | | |
|---|---|---|---|---|
| | 0.7 | 1 | 2 | 3 |
| **R600** | | | | |
| NRV 6 v2 | 0.4 | 1.7 | 4.2 | 5.7 |
| NRV 10 v2 | 2.8 | 7.0 | 11.3 | 13.9 |
| NRV 12 v2 | 10.2 | 12.2 | 17.3 | 21.2 |
| NRV 16 v2 | 14.6 | 19.4 | 27.7 | 33.9 |
| NRV 19 v2 | 26.6 | 31.8 | 44.9 | 55.0 |
| NRV 22 | 34.8 | 41.5 | 58.8 | 72.0 |
| NRV 28 | 67.5 | 80.7 | 114.1 | 139.7 |
| NRV 35 | 118.6 | 141.8 | 200.5 | 245.5 |
| **R600a** | | | | |
| NRV 6 v2 | 0.4 | 1.5 | 3.7 | 5.0 |
| NRV 10 v2 | 2.5 | 6.2 | 10.0 | 12.3 |
| NRV 12 v2 | 9.1 | 10.8 | 15.3 | 18.8 |
| NRV 16 v2 | 12.9 | 17.2 | 24.5 | 30.0 |
| NRV 19 v2 | 23.6 | 28.2 | 39.9 | 48.8 |
| NRV 22 | 30.8 | 36.9 | 52.1 | 63.8 |
| NRV 28 | 59.9 | 71.6 | 101.2 | 123.9 |
| NRV 35 | 105.2 | 125.8 | 177.8 | 217.8 |
| **R1234yf** | | | | |
| NRV 6 v2 | 0.2 | 0.9 | 2.3 | 3.1 |
| NRV 10 v2 | 1.5 | 3.8 | 6.2 | 7.6 |
| NRV 12 v2 | 5.6 | 6.7 | 9.4 | 11.6 |
| NRV 16 v2 | 8.0 | 10.6 | 15.1 | 18.5 |
| NRV 19 v2 | 14.5 | 17.3 | 24.5 | 30.0 |
| NRV 22 | 19.0 | 22.7 | 32.1 | 39.3 |
| NRV 28 | 36.8 | 44.0 | 62.3 | 76.3 |
| NRV 35 | 64.8 | 77.4 | 109.4 | 134.0 |
| **R1270** | | | | |
| NRV 6 v2 | 0.4 | 1.6 | 3.9 | 5.2 |
| NRV 10 v2 | 2.6 | 6.4 | 10.4 | 12.7 |
| NRV 12 v2 | 9.4 | 11.2 | 15.9 | 19.4 |
| NRV 16 v2 | 13.4 | 17.9 | 25.4 | 31.1 |
| NRV 19 v2 | 24.4 | 29.2 | 41.3 | 50.5 |
| NRV 22 | 31.9 | 38.1 | 53.9 | 66.1 |
| NRV 28 | 62.0 | 74.0 | 104.7 | 128.3 |
| NRV 35 | 108.9 | 130.1 | 184.1 | 225.4 |

**Suction vapour capacity [TR]**

| Pressure drop across valve Δp [psi] | Suction vapour capacity [1]) at evaporating temperature $t_e$ [°F] | | | |
|---|---|---|---|---|
| | -20 | 15 | 32 | 40 |
| **R600** | | | | |
| 1 | 0.04 | 0.08 | 0.11 | 0.12 |
| 1 | 0.17 | 0.35 | 0.46 | 0.51 |
| 1 | 0.37 | 0.67 | 0.85 | 0.94 |
| 1 | 0.59 | 1.06 | 1.35 | 1.50 |
| 1 | 0.96 | 1.74 | 2.20 | 2.44 |
| 1 | 1.26 | 2.28 | 2.88 | 3.20 |
| 1 | 2.44 | 4.42 | 5.60 | 6.21 |
| 1 | 4.29 | 7.77 | 9.84 | 10.91 |
| **R600a** | | | | |
| 1 | 0.05 | 0.10 | 0.13 | 0.14 |
| 1 | 0.23 | 0.42 | 0.54 | 0.59 |
| 1 | 0.46 | 0.78 | 0.97 | 1.07 |
| 1 | 0.73 | 1.24 | 1.54 | 1.70 |
| 1 | 1.19 | 2.03 | 2.52 | 2.78 |
| 1 | 1.56 | 2.65 | 3.30 | 3.63 |
| 1 | 3.03 | 5.14 | 6.40 | 7.05 |
| 1 | 5.32 | 9.04 | 11.25 | 12.40 |
| **R1234yf** | | | | |
| 1 | 0.06 | 0.10 | 0.12 | 0.13 |
| 1 | 0.23 | 0.40 | 0.49 | 0.54 |
| 1 | 0.43 | 0.71 | 0.88 | 0.97 |
| 1 | 0.68 | 1.13 | 1.40 | 1.54 |
| 1 | 1.12 | 1.85 | 2.29 | 2.52 |
| 1 | 1.46 | 2.41 | 2.99 | 3.30 |
| 1 | 2.83 | 4.69 | 5.81 | 6.40 |
| 1 | 4.98 | 8.24 | 10.22 | 11.24 |
| **R1270** | | | | |
| 1 | 0.14 | 0.21 | 0.25 | 0.27 |
| 1 | 0.56 | 0.85 | 1.01 | 1.09 |
| 1 | 1.01 | 1.51 | 1.79 | 1.94 |
| 1 | 1.61 | 2.40 | 2.85 | 3.08 |
| 1 | 2.63 | 3.92 | 4.66 | 5.04 |
| 1 | 3.44 | 5.13 | 6.09 | 6.59 |
| 1 | 6.68 | 9.95 | 11.83 | 12.78 |
| 1 | 11.74 | 17.49 | 20.79 | 22.47 |

**Hot gas capacity [TR]**

| Hot gas capacity [1]) at pressure drop across valve Δp [psi] NRV | | | |
|---|---|---|---|
| 0.7 | 1 | 2 | 4 |
| **R600** | | | |
| 0.0 | 0.1 | 0.4 | 0.5 |
| 0.2 | 0.6 | 1.0 | 1.3 |
| 0.9 | 1.1 | 1.5 | 2.0 |
| 1.3 | 1.7 | 2.4 | 3.2 |
| 2.3 | 2.8 | 3.9 | 5.3 |
| 3.0 | 3.6 | 5.0 | 6.9 |
| 5.9 | 7.0 | 9.8 | 13.4 |
| 10.4 | 12.4 | 17.2 | 23.6 |
| **R600a** | | | |
| 0.0 | 0.2 | 0.4 | 0.6 |
| 0.3 | 0.7 | 1.1 | 1.5 |
| 1.0 | 1.2 | 1.6 | 2.2 |
| 1.4 | 1.9 | 2.6 | 3.6 |
| 2.5 | 3.0 | 4.2 | 5.8 |
| 3.3 | 4.0 | 5.5 | 7.6 |
| 6.4 | 7.7 | 10.7 | 14.8 |
| 11.3 | 13.5 | 18.9 | 26.1 |
| **R1234yf** | | | |
| 0.0 | 0.1 | 0.3 | 0.5 |
| 0.2 | 0.6 | 0.9 | 1.3 |
| 0.8 | 1.0 | 1.4 | 2.0 |
| 1.2 | 1.6 | 2.3 | 3.2 |
| 2.2 | 2.6 | 3.7 | 5.1 |
| 2.9 | 3.4 | 4.8 | 6.7 |
| 5.5 | 6.6 | 9.3 | 13.0 |
| 9.7 | 11.6 | 16.4 | 22.9 |
| **R1270** | | | |
| 0.1 | 0.3 | 0.7 | 1.0 |
| 0.4 | 1.1 | 1.8 | 2.5 |
| 1.6 | 2.0 | 2.8 | 3.9 |
| 2.3 | 3.1 | 4.4 | 6.2 |
| 4.3 | 5.1 | 7.2 | 10.1 |
| 5.6 | 6.7 | 9.4 | 13.2 |
| 10.8 | 12.9 | 18.2 | 25.6 |
| 19.0 | 22.7 | 32.0 | 44.9 |

**Hot gas capacity [TR]**

| Type | Hot gas capacity [1]) at pressure drop across valve Δp [psi] NRVH | | | |
|---|---|---|---|---|
| | 3 | 4 | 5 | 6 |
| **R600** | | | | |
| NRVH 6 v2 | 0.0 | 0.1 | 0.4 | 0.5 |
| NRVH 10 v2 | 0.1 | 0.8 | 1.3 | 1.6 |
| NRVH 12 v2 | 1.4 | 2.0 | 2.2 | 2.4 |
| NRVH 16 v2 | 0.6 | 2.5 | 3.2 | 3.7 |
| NRVH 19 v2 | 3.7 | 5.3 | 5.8 | 6.2 |
| NRVH 22 | 6.1 | 6.9 | 7.6 | 8.2 |
| NRVH 28 | 11.8 | 13.4 | 14.7 | 15.9 |
| NRVH 35 | 20.7 | 23.6 | 25.9 | 27.9 |
| **R600a** | | | | |
| NRVH 6 v2 | 0.0 | 0.1 | 0.4 | 0.6 |
| NRVH 10 v2 | 0.1 | 0.9 | 1.5 | 1.8 |
| NRVH 12 v2 | 1.6 | 2.2 | 2.5 | 2.7 |
| NRVH 16 v2 | 0.6 | 2.9 | 3.6 | 4.1 |
| NRVH 19 v2 | 4.1 | 5.8 | 6.5 | 7.0 |
| NRVH 22 | 6.7 | 7.6 | 8.4 | 9.1 |
| NRVH 28 | 13.0 | 14.8 | 16.4 | 17.8 |
| NRVH 35 | 22.8 | 26.1 | 28.8 | 31.2 |
| **R1234yf** | | | | |
| NRVH 6 v2 | 0.0 | 0.1 | 0.4 | 0.5 |
| NRVH 10 v2 | 0.1 | 0.8 | 1.3 | 1.6 |
| NRVH 12 v2 | 1.4 | 2.0 | 2.2 | 2.4 |
| NRVH 16 v2 | 0.6 | 2.6 | 3.2 | 3.7 |
| NRVH 19 v2 | 3.6 | 5.1 | 5.7 | 6.2 |
| NRVH 22 | 5.8 | 6.7 | 7.4 | 8.1 |
| NRVH 28 | 11.3 | 13.0 | 14.5 | 15.7 |
| NRVH 35 | 19.9 | 22.9 | 25.4 | 27.7 |
| **R1270** | | | | |
| NRVH 6 v2 | 0.1 | 0.2 | 0.8 | 1.0 |
| NRVH 10 v2 | 0.2 | 1.6 | 2.6 | 3.1 |
| NRVH 12 v2 | 2.7 | 3.9 | 4.3 | 4.7 |
| NRVH 16 v2 | 1.1 | 5.1 | 6.4 | 7.3 |
| NRVH 19 v2 | 7.1 | 10.1 | 11.2 | 12.3 |
| NRVH 22 | 11.4 | 13.2 | 14.7 | 16.0 |
| NRVH 28 | 22.2 | 25.6 | 28.5 | 31.1 |
| NRVH 35 | 39.0 | 44.9 | 50.1 | 54.7 |

*1) Rated capacities are based on:*
*-Evaporating temperature, $t_e$ = 14 °F*
*-Condensing temperature, $t_c$ = 86 °F*
*-Subcooling $t_{sub}$ = 9 °F*
*-Superheat $t_{sh}$ = 0 °F*
*-Discharge temperature, $t_d$ =176 °F ahead of the valve.*
*The table values refer to the evaporator capacity.*

### Correction factors

When selecting the evaporator capacity is to be multiplied by a correction factor depending on the liquid temperature tl ahead of the valve/the evaporator. The corrected capacity can then be found from the table.

***System capacity·Correction factor=Table capacity***

**Correction factors for liquid temperature $t_l$**

| $t_l$ [°F] | 15 | 32 | 50 | 60 | 70 | 80 | 86 | 95 | 105 | 115 | 125 |
|---|---|---|---|---|---|---|---|---|---|---|---|
| **R600** | 0.77 | 0.82 | 0.88 | 0.92 | 0.97 | 1.02 | 1.07 | 1.13 | 1.20 | 1.27 | 1.36 |
| **R600a** | 0.75 | 0.81 | 0.87 | 0.92 | 0.96 | 1.02 | 1.08 | 1.14 | 1.22 | 1.31 | 1.41 |
| **R1234yf** | 0.69 | 0.76 | 0.84 | 0.89 | 0.95 | 1.02 | 1.10 | 1.20 | 1.32 | 1.46 | 1.63 |
| **R1270** | 0.74 | 0.80 | 0.87 | 0.91 | 0.96 | 1.02 | 1.08 | 1.16 | 1.24 | 1.35 | 1.47 |

Note:
*- For capacity calculation of other refrigerants, please contact Danfoss.*

## Dimensions and weights

**NRV 6 - 19**

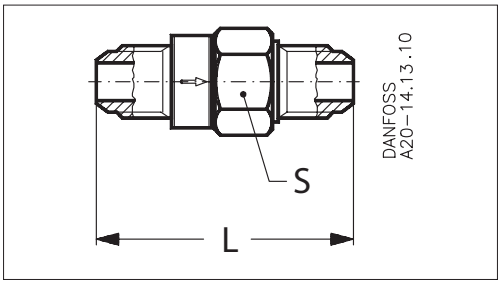


**Flare straightway connection - SI Units**

| Type | Size | | L [mm] | Spanner flats S [mm] | Net weight [kg] |
|---|---|---|---|---|---|
| | [in] | [mm] | | | |
| **NRV 6** | 1/4 | 6 | 55 | 19 | 0.07 |
| **NRV 10** | 3/8 | 10 | 60 | 19 | 0.08 |
| **NRV 12** | 1/2 | 12 | 70 | 24 | 0.14 |
| **NRV 16** | 5/8 | 16 | 81 | 28 | 0.20 |
| **NRV 19** | 3/4 | 19 | 95 | 34 | 0.34 |

**Flare straightway connection - US Units**

| Type | Size | L [in] | Spanner flats S [in] | Net weight [lb] |
|---|---|---|---|---|
| | [in] | | | |
| **NRV 6** | 1/4 | 2.17 | 0.75 | 0.15 |
| **NRV 10** | 3/8 | 2.36 | 0.75 | 0.19 |
| **NRV 12** | 1/2 | 2.76 | 0.94 | 0.30 |
| **NRV 16** | 5/8 | 3.19 | 1.10 | 0.45 |
| **NRV 19** | 3/4 | 3.74 | 1.34 | 0.75 |

## Dimensions and weights

**NRV 6s - 19s / NRVH 6s - 19s**

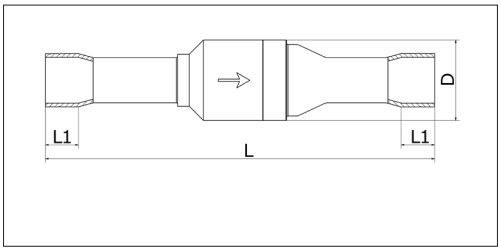


**Solder straightway connection - SI Units**

| Type | Size [in] | Size [mm] | L [mm] | $L_1$ [mm] | øD [mm] | Net weight [kg] |
|---|---|---|---|---|---|---|
| NRV/NRVH 6s v2 | 1/4 | 6 | 92 | 7 | 18 | 0.05 |
| NRV/NRVH 6s v2 [1]) | 3/8 | 10 | 95 | 9 | 18 | 0.06 |
| NRV/NRVH 10s v2 | 3/8 | 10 | 109 | 9 | 18 | 0.05 |
| NRV/NRVH 10s v2 [1]) | 1/2 | 12 | 109 | 10 | 18 | 0.06 |
| NRV/NRVH 12s v2 | 1/2 | 12 | 131 | 10 | 22 | 0.09 |
| NRV/NRVH 12s v2 [1]) | 5/8 | 16 | 131 | 12 | 22 | 0.09 |
| NRV/NRVH 16s v2 | 5/8 | 16 | 139 | 12 | 28 | 0.16 |
| NRV/NRVH 16s v2 [1]) | – | 18 | 139 | 14 | 28 | 0.17 |
| NRV/NRVH 19s v2 | – | 18 | 165 | 14 | 34 | 0.27 |
| NRV/NRVH 16s v2 [1]) | 3/4 | 19 | 139 | 14 | 28 | 0.17 |
| NRV/NRVH 19s v2 | 3/4 | 19 | 165 | 14 | 34 | 0.28 |
| NRV/NRVH 19s v2 [1]) | 7/8 | 22 | 165 | 17 | 34 | 0.28 |

**Solder straightway connection - US Units**

| Type | Size [in] | L [in] | $L_1$ [in] | øD [in] | Net weight [lb] |
|---|---|---|---|---|---|
| NRV/NRVH 6s v2 | 1/4 | 3.62 | 0.28 | 0.71 | 0.11 |
| NRV/NRVH 6s v2 [1]) | 3/8 | 3.74 | 0.35 | 0.71 | 0.13 |
| NRV/NRVH 10s v2 | 3/8 | 4.29 | 0.35 | 0.71 | 0.11 |
| NRV/NRVH 10s v2 [1]) | 1/2 | 4.29 | 0.39 | 0.71 | 0.13 |
| NRV/NRVH 12s v2 | 1/2 | 5.16 | 0.39 | 0.87 | 0.20 |
| NRV/NRVH 12s v2 [1]) | 5/8 | 5.16 | 0.47 | 0.87 | 0.20 |
| NRV/NRVH 16s v2 | 5/8 | 5.47 | 0.47 | 1.10 | 0.35 |
| NRV/NRVH 16s v2 [1]) | 3/4 | 5.47 | 0.55 | 1.10 | 0.38 |
| NRV/NRVH 19s v2 | 3/4 | 6.50 | 0.55 | 1.34 | 0.62 |
| NRV/NRVH 19s v2 [1]) | 7/8 | 6.50 | 0.67 | 1.34 | 0.62 |

[1]) *Oversize connections.*

## Dimensions and weights

**NRV 22s - 35s / NRVH 22s - 35s**

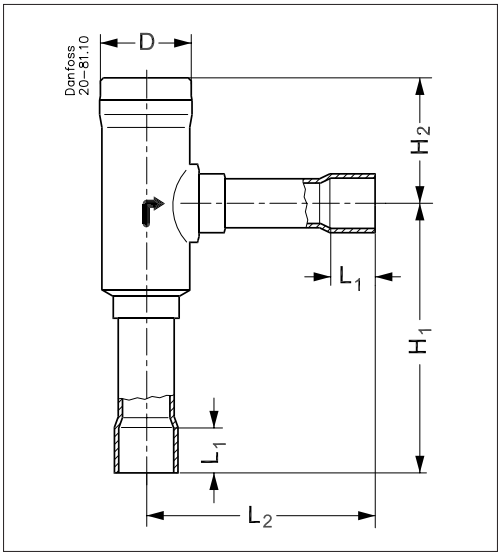


**Solder angleway connection - SI Units**

| Type | Size [in] | Size [mm] | $H_1$ [mm] | $H_2$ [mm] | $L_1$ [mm] | $L_2$ [mm] | øD [mm] | Net weight [Kg] |
|---|---|---|---|---|---|---|---|---|
| NRV/NRVH 22s | 7/8 | 22 | 94 | 48 | 17 | 87 | 37 | 0.58 |
| NRV/NRVH 22s [1]) | 1 1/8 | 28 | 94 | 48 | 22 | 87 | 37 | 0.61 |
| NRV/NRVH 28s | 1 1/8 | 28 | 141 | 67 | 20 | 123 | 49 | 1.33 |
| NRV/NRVH 28s [1]) | 1 3/8 | 35 | 141 | 67 | 25 | 123 | 49 | 1.47 |
| NRV/NRVH 35s | 1 3/8 | 35 | 141 | 67 | 25 | 123 | 49 | 1.40 |
| NRV/NRVH 35s [1]) | 1 5/8 | 42 | 141 | 67 | 29 | 123 | 49 | 1.38 |

**Solder angleway connection - US Units**

| Type | Size [in] | $H_1$ [in] | $H_2$ [in] | $L_1$ [in] | $L_2$ [in] | øD [in] | Net weight [lb] |
|---|---|---|---|---|---|---|---|
| NRV/NRVH 22s | 7/8 | 3.70 | 1.89 | 0.67 | 3.43 | 1.46 | 1.28 |
| NRV/NRVH 22s [1]) | 1 1/8 | 3.70 | 1.89 | 0.87 | 3.43 | 1.46 | 1.35 |
| NRV/NRVH 28s | 1 1/8 | 5.55 | 2.64 | 0.79 | 4.84 | 1.93 | 2.93 |
| NRV/NRVH 28s [1]) | 1 3/8 | 5.55 | 2.64 | 0.98 | 4.84 | 1.93 | 3.26 |
| NRV/NRVH 35s | 1 3/8 | 5.55 | 2.64 | 0.98 | 4.84 | 1.93 | 3.08 |
| NRV/NRVH 35s [1]) | 1 5/8 | 5.55 | 2.64 | 1.14 | 4.84 | 1.93 | 3.06 |

[1]) *Oversize connections.*

Danfoss can accept no responsibility for possible errors in catalogues, brochures and other printed material. Danfoss reserves the right to alter its products without notice. This also applies to products already on order provided that such alterations can be made without subsequential changes being necessary in specifications already agreed.
All trademarks in this material are property of the respective companies. Danfoss and the Danfoss logotype are trademarks of Danfoss A/S. All rights reserved.