P.O. Box 2758
Windsor, Nova Scotia, B0N 2T0
Phone: 902-798-2261 Fax: 902-798-2557
www.nu-airventilation.com
Email: nuair@nu-airventilation.com

Now Featuring the Nu-Air EZ System.

1. **EZ Level suspension straps.**
2. **EZ Balance pressure ports to measure and balance air flows.**

WINDSOR SERIES

OPERATING, MAINTAINING & INSTALLING YOUR HEAT RECOVERY VENTILATOR

FOR MODELS NU145, NU165, NU205

* LEAVE THIS DOCUMENT WITH THE HOMEOWNER

Specifications, dimensions and ratings may change without notice
as a result of ongoing product development and improvements.

Rev. 6.0 November 1, 2016

IMPORTANT

PLEASE READ THIS MANUAL BEFORE YOU INSTALL OR SERVICE UNIT

NOTE

Prior to integrating this unit with any other piece of mechanical equipment, i.e. furnace, air handler, combustion heating appliance, careful consideration must be given to system design and integration to ensure compatibility and proper operation of both appliances. **Do not** connect the duct system of your H/ERV to any clothes dryer or kitchen exhaust fan duct system.

Whether installing this unit as part of an independent system or to integrate it with a central heating/cooling system, use the procedure in this manual to ensure that the air flows of the H/ERV are balanced. Only a properly balanced H/ERV will deliver maximum performance and energy efficiency.

Although this document contains guidelines for proper HRV sizing and installation, your ventilation system should be installed in conformance to the appropriate provincial or state building regulations or National Building Code and/or ASHRAE "Good Engineering Practices".

AVOID RISK OF INJURY, ELECTRIC SHOCK AND FIRE HAZARD

DO NOT install this product in an unconditioned space—15º C/59º F ambient temperature is recommended—or in a space/manner where maintenance and service might a pose risk of personal injury or damage to this product.

For indoor installations only.

Your H/ERV is equipped with a 3-prong plug which will fit an A/C electrical outlet in just one orientation. Do not alter this plug or its cord in any way. Grip the plug firmly when removing it from an electrical outlet—**NEVER** unplug this product by pulling or twisting its power cord.

ALWAYS unplug an H/ERV before you open or remove its cover (door) to clean the inside of the unit or for any other servicing or repairs.

The **cover to this H/ERV** is removable to ensure ease of access to internal components during cleaning and servicing. **USE CAUTION** when opening or removing the cover of this H/ERV to avoid risk of personal injury or damage to the cover.

NEVER attempt to clean the interior of this H/ERV or its components while the unit is plugged in or running.

ONLY qualified persons should attempt repair or service of any electrical/internal component of this product.

NEVER attempt to repair or service any internal component of this H/ERV while the unit is plugged in or running.

DO NOT use your ventilation system to exhaust flammable fumes or gasses.

ALWAYS contact your Nu-Air representative if you have any questions or comments about the operation or maintenance of your Nu-Air H/ERV—we are here to help you!

TABLE OF CONTENTS

1. SYSTEM FUCTION/OPERATING TIPS *3*
2. INSTALLATION *4*
2.1. Installation Supplies, Standard Issue Items **4**
2.2. Installer's Responsibilities **4**
2.3. Installation System Options **5**
2.4. Ducting to The Outside **7**
2.5. Mounting & Noise Control **8**
2.6. Ductwork **9**
2.7. Drain Connections **10**
2.8. Furnace Interlock **11**
2.9. Balancing Air Flows **12**
3. CONTROL OPTIONS & CONTROL WIRING *14*
3.1. ES Series Controls (12 VDC) **14**
3.2. Windsor Series Controls & Other 24 V Control Options **16**
3.3. Status LEDs & Mode of Operation **18**
4. START-UP *19*
5. MAINTENANCE *19*
6. ANNUAL SERVICING: *20*
7. TROUBLE SHOOTING *20*
8. ELECTRICAL SCHEMATICS *21*
9. WARRANTIES *23*
10. NOTES/SERVICE RECORD *24*

1. SYSTEM FUCTION/OPERATING TIPS

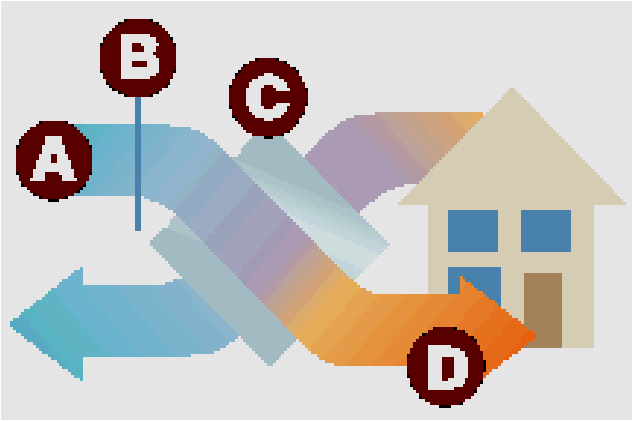

A. Powerful, centrifugal blowers bring fresh air into your home while an equal amount of stale, humid air is exhausted to the outside. This is **NU-AIR**'s balanced central ventilation system.
B. Incoming fresh air is filtered before flowing through the heat exchange core.
C. Stale, humid air flows through the cross-flow heat exchanger and transfers energy to the incoming fresh air. The air streams do not mix.
D. Tempered fresh air is distributed to the house through an independent or shared (furnace) duct system.

Why Ventilate?

Modern homes are particularly well-sealed and well-insulated from the outside, i.e. they are very "tight". As such, tights homes tend to trap odours and other indoor pollutants like excessive moisture, volatile organic compounds (VOCs) from paints, cleaners, furniture and building materials. An HRV or ERV acts like the lungs of the home, delivering fresh, filtered outdoor air while remove stale, polluted air.

Operating Your System

Depending on the presence of/type of controls used in your installation, your ventilator is capable of the following modes of operation:
Standby. The unit is idle and responds to high-speed demands from a timer, dehumidistst, CO2 sensor, etc.
Full-Time Low Speed. The unit operates in low speed all the time and will go to high speed with a command from other controls in the system, such as a timer, dehumidistst, CO2 sensor, etc.
Full-Time High Speed. The unit runs in high speed on command from a central control or timer.
Timed High Speed. Timers operate the unit in high speed for 20 or 20-40-60 minute intervals.
20 Lo/40 Standby. The unit runs in a cycle of 20 minutes in low speed, followed by 40 minutes of standby.
20 Lo/40 Recirculation. The unit runs in a cycle of 20 minutes in low speed, followed by 40 minutes of recirculating air within the home.
Full-Time Recirculation. The unit continuously recirculates air within the home. While not ventilating, this mode can help prevent air in the home from feeling stagnant and offers some level of air filtration.

In a basic sense, it is recommended that the unit run on low speed at all times to ensure a steady supply of fresh air and removal of indoor pollutants. **However, how much a home needs ventilation can depend on several factors such as number of inhabitants, cooking habits, hobbies, presence of pets, opening windows, etc.** so no two households are necessarily the same for the amount and frequency of ventilation they need. Observance of moisture on windows, lingering odours and a sensation of stuffy, stagnant air are all signs for the need of ventilation in general or increased ventilation in specific cases. The controls for your ventilation system might vary in features, but offer means to regulate how much and how often the home is ventilated.

Some controls are equipped with a dehimidstat, or "d-stat". A d-stat monitors ambient relative humidity (RH) and has selectable settings, generally 30%-80% RH. When ambient humidity is detected above the

setpoint, it will trigger high speed in the ventilator. The unit will run in high speed until the ambient air returns to the setpoint RH. Your ventilator is not a dehumidifier, however ventilating can have a dehumidifying effect by simply removing high RH air from the space, particularly during cooler/cold seasons when outdoor humidity is typically lower than indoor humidity. Typical dehumidistat settings are as follows:

Winter Operation – 40% - 60%. Lower settings may be necessary in colder zones to keep windows free of condensation. If you notice the air is uncomfortably dry in winter, you might set humidity to a higher level or choose an operation mode above which operates the ventilator less or for shorter periods.
Spring/Fall Operation- 50% - 60%.
Summer Operation – For air conditioned homes run the HRV as recommended for winter operation, i.e. continuous low speed or use a 20/40 setting. In homes without air conditioning, there is no need to run the HRV during the day when windows are open. If the HRV is connected to the bathrooms(s) or kitchen, use the standby setting. The typical dehumidistat summer setting is 65%-80% or OFF.

Note: For dial-type dehumidistats, moving the dial to **ON** locks unit in high speed; moving the dial to **OFF** prevents ambient humidity from triggering high speed (i.e. turns "off" humidity sensing).

2. INSTALLATION

2.1. Installation Supplies, Standard Issue Items

The HRV comes equipped with:

- Filters
- Anti-Vibration Straps
- Heat Recovery Core
- Drain Hose Assembly
- Balancing dampers are NOT REQUIRED. Windsor Series HRVs from Nu-Air are equipped with a system which allows the installer to adjust each motor in both high and low speed.
- Removable terminal blocks for timers, remote controls, furnace interlock. A 4-wire terminal block for 12 VDC ES Series controls and a 10-wire terminal block for 24 V controls are provided with the unit. To use these, gently remove the block from the HRV, fit the wire into place and secure it in its trap, using a fine-tipped flat-headed screwdriver.

2.2. Installer's Responsibilities

Installers are responsible for the performance of the ventilation system and for ensuring that all codes and standards are met.

- Do not mount the fresh air supply near a source of contaminated air such as automotive exhaust, gas or propane exhaust, garbage containers or oil tanks.
- Do not connect a dryer exhaust to an HRV.
- Combustion appliances such as furnaces and hot water heaters must not draw combustion air directly from an HRV.
- Do not connect a kitchen range hood to any part of this system.
- Do not install in attics or other unconditioned spaces (min. 16º C, 61º F).
- Do not install in enclosed garages.
- Try to maintain straight duct runs as much as possible, using as few joint fittings as possible.
- Keep use of flexible ducting to a minimum.
- Be sure to observe local codes regarding running and insulating ducts in unconditioned spaces. Poorly insulated ducts run in unconditioned spaces will hamper the efficiency of the HRV.

Sizing the System

For residential applications you should have a minimum ventilation capacity of 10 cfm (5 L/s) per room. Refer to ASHRAE Standard 62 for acceptable ventilation rates in commercial buildings.

Calculating TVC (Total Ventilation Capacity) for Residential Applications:

- *20 cfm for the master bedroom*
- *20 cfm for an unfinished basement*
- *10 cfm for each other room in the house*

Add these together to arrive at your TVC.

This method is called the "Room Count Method" and is part of CSA F326 (Residential Mechanical Ventilation Systems). 0.3 air change per hour is no longer used.

Areas typically serviced by Fresh Air: Bedrooms, Living Rooms, Dining Areas, and Recreation Areas.
Areas typically serviced by Exhaust Air: Laundry Rooms, Kitchens, Bathrooms, other wet rooms.

Note
Kitchen exhaust grills should be equipped with a grease filter and must be located at least 3 ft. horizontally in all directions from the surface of the range extended to the ceiling.

2.3. Installation System Options

Before installing your HRV, please read these instructions for correct installation. The **Nu-Air** HRV is a self-contained system that is ready to be installed.

There are **three** commonly used and approved methods of installation.

An HRV with direct ductwork

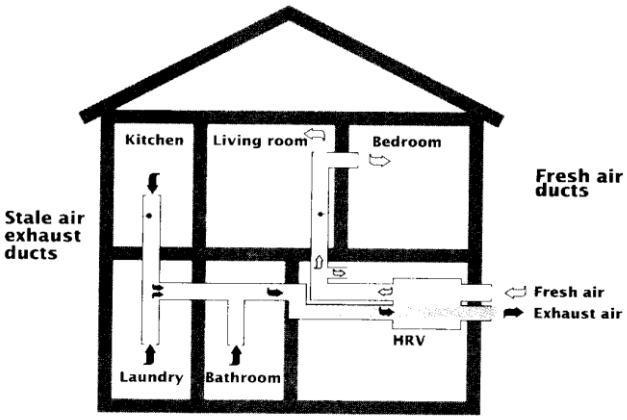

2.3.1. The Fully Ducted System

This system uses an independent duct system for supply and exhaust air. The HRV is controlled independently of all other equipment.
The best results are achieved when:

- Each room of the space is serviced with a vent mounted in the ceiling or high on an interior wall (within 12" of the ceiling).
- Vents are located deep within a room, where they will not short circuit or create an uncomfortable draft.

2.3.2. The Extended Exhaust System

This system uses the HRV in conjunction with a forced air furnace distribution system. In this system the HRV supply air to the house is introduced into the return duct of the forced air furnace. Separate, additional ductwork is used to transfer stale air from the wet rooms to the HRV.

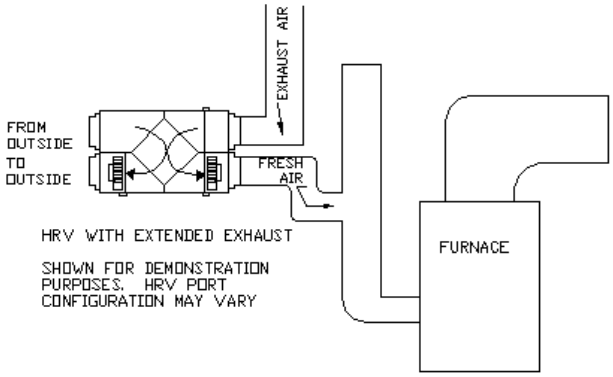

2.3.3. Extended System, Continuous Ventilation

The furnace fan may not need to run continuously with this system. Check local code requirements. For improved supply air distribution during continuous ventilation mode, the furnace may be interlocked to the HRV. See Section 2.8 for interlock wiring and settings and Section 3 controls options and wiring.

2.3.4. Extended System, Intermittent Ventilation

If the HRV is operated intermittently, the furnace fan should be interlocked with the HRV for good distribution of supply air during high-speed ventilation conditions.

2.3.5. The Simplified System

This system uses the furnace's return plenum for both supply air distribution and exhaust air collection. The exhaust air connection must be a minimum of 40 inches upstream of the supply air connection to avoid short-circuiting of the fresh air.

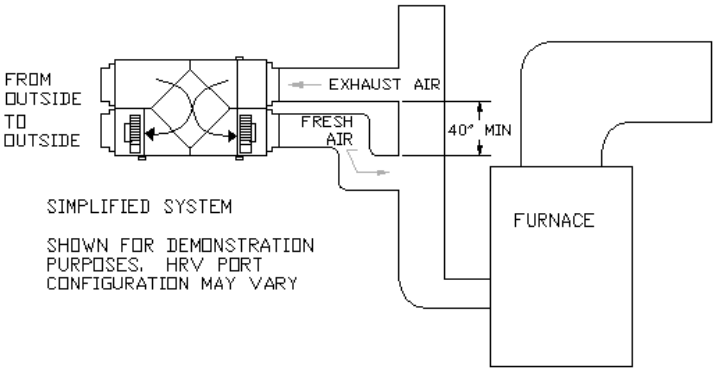

2.3.5.1. Simplified System - Continuous Ventilation & Intermittent Operation

For proper supply air distribution with this system, and to prevent short circuiting in the return air duct, the furnace fan must run during ventilation mode. Interlock the furnace and HRV in accordance with Section 2.8.

INSTALLATION NOTES:

1) When selecting an installation option, consideration should be given to the increased electrical consumption of the furnace fan. The way that your Heat/Energy-recovery ventilator is installed may make a significant difference to the electrical energy that you will use. To minimize the electricity use of the Heat/Energy-recovery ventilator, a stand-alone fully ducted installation is recommended. If you choose a simplified installation that operates your furnace air handler for room-to-room ventilation, an electrically efficient furnace that has an electronically commutated (EC) variable speed blower motor will minimize your electrical energy consumption and operating cost.
2) In cases where the HRV is coupled with a central air handling system, the HRV fresh air supply duct to the return air plenum shall be connected at a sufficient distance upstream of the plenum connection to

the furnace. This allows proper mixing and ensures appropriate air temperature at the furnace heat exchanger in cold weather. For fuel-fired mid and high efficiency furnaces a minimum temperature of 15.5º C (60º F) is recommended at the heat exchanger (check the furnace manufacturer's specifications).

3) To ensure quiet operation of ENERGY STAR qualified HRV/ERVs, each product should be installed using sound attenuation techniques, such as using a flexible connector between the unit and the rigid-pipe supply and return ducts.

4) Installing a user-accessible control with your product will improve comfort and may significantly reduce the product's energy use. Most building codes require a centrally located control with an on/off switch.

2.4. Ducting to The Outside

Between the weather hoods and the HRV you must use fully insulated ducting with an integrated **vapour** barrier. Insulated ducting with an integrated **vapour** barrier must also be used on all runs passing through unheated areas. This will help avoid condensation problems and energy losses.

The minimum RSI value of insulation should equal that of the local building codes.

2.4.1. Weather Hood Installation

1. Insulated flex duct slides over the galvanized sleeve of the weather hood.
2. Use sheathing tape (red) to join the inner duct to the hood's sleeve.
3. Tape the **vapour** barrier to back of the hood without compressing the insulation. Caulk or foam seal around the collars and hoods to eliminate air and water leaks.
4. Locate the hoods for easy access to the bird screen for cleaning purposes.
5. Be sure to use exterior sealant along the top and side edges of the hoods, tooling the sealant to ensure a good seal.

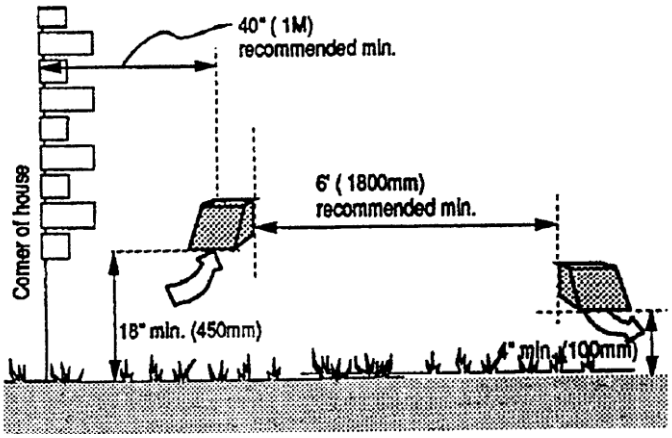

Make the insulated duct that connects the weather hoods to the HRV as short as possible to minimize airflow restrictions. Avoid sharp bends and stretch out the inner lining of the flex duct as much as possible to reduce static pressure and maximize airflow. For runs over 12', increasing flex diameter 1" to next size up will reduce pressure drop in the duct.

2.4.1.1. Locating the Weather Hoods

There should be a minimum of 6' (feet) of separation between the fresh air and exhaust hoods. Supply hoods should be a minimum of 18" (inches) above the ground level. Exhaust hoods should be at least 4" (inches) above the ground level. Holes through the wall should be 1" larger than the collar on the hood, to allow for insulation. Fresh air hoods must be 3' away from any other appliance exhaust vent or furnace vent.

In addition ASHRAE Standard 62-99 recommends the following. Ventilation systems should be designed to prevent the reintroduction of exhaust contaminants, condensation or freeze-ups and growth of microorganisms. Make-up air inlets and exhaust air outlets shall be located to avoid contamination of

the makeup air. Contaminants from sources such as cooling towers, sanitary vents, vehicular exhaust, and street traffic should be avoided. Consult local code requirements for minimum distances.

2.5. Mounting & Noise Control

For maximum efficiency, the HRV should be installed in a heated area. The HRV is designed to be hung from the ceiling by way of the anti-vibration straps supplied. Avoid hanging the HRV directly below a bedroom or other quiet area. Your unit comes with Nu-Air EZ-Level adjustable hanging straps for easy mounting and leveling.

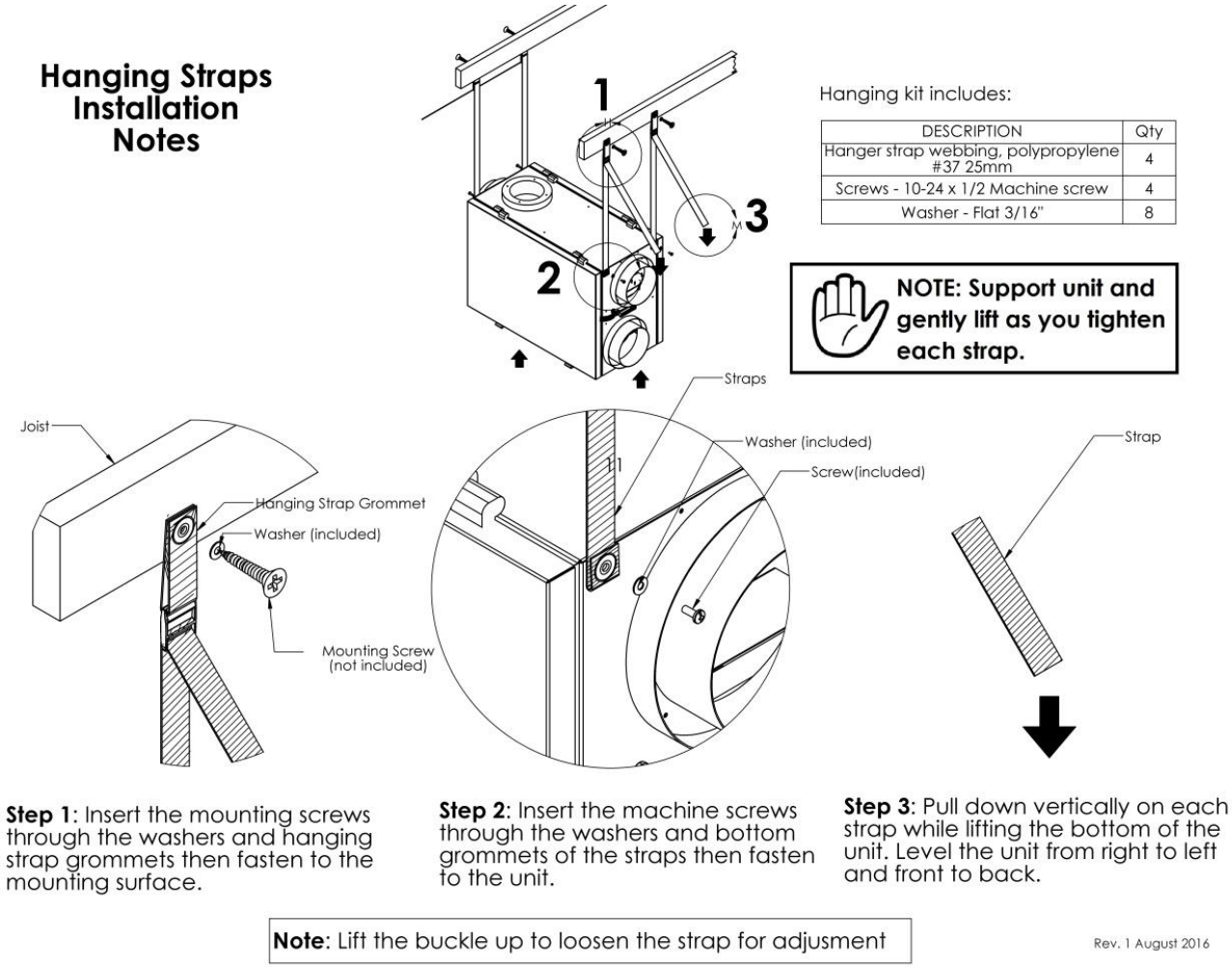

2.5.1. Connecting To Other Equipment - Residential Applications

Interconnection with a forced air furnace duct system is permissible; however, your HRV is not intended to be connected to any other equipment or appliances.

2.6. Ductwork

An engineer or other qualified person should design the duct system.

- Duct runs should be straight with minimum bends and elbows.
- Ensure joints are tight-fitting and sealed with duct tape or sealer.
- Use galvanized duct whenever possible. Although flexible duct can be used, its use should be restricted to areas indicated (to outside hoods and in unheated spaces).
- Flexible ducting may be desired in some installations for noise abatement. **To ensure effective air flow, use only as much flexible ducting as necessary and keep it taut.**
- All ducting must be supported every 3' or less.
- Be sure to seal all pipe joints with foil tape or a duct sealant.
- When possible, form elbow joints so that they are as straight as possible.

5th Port Recirculation and Defrost Strategies (ducting)

For units equipped with a 5th port, there are three options to suit the requirements of the installation:

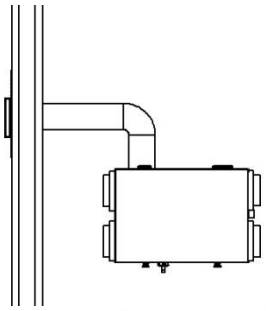

1. Unducted. Simply allow the unit to draw ambient air from the space in which the unit is located.

2. Ducted with a grill. Duct the 5th port to a neutral space. This approach is particularly useful in distributing super-heated air in which there might be a wood stove or fireplace. This approach is also useful if the room where the unit is installed is used to store undesirable or perhaps noxious chemicals.

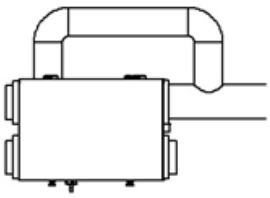

3. Connected to the Exhaust from Building Pipe. While this method involves recirculation of exhaust air from the building, it does avoid the potential of circulating unwanted chemical gases if the mechanical room is used to store such substances were the 5th port left open. It also removes any risk of depressurization in mechanical rooms that might contain combustion equipment. The Novoclimat

standard of Quebec, Canada, requires this method of ducting for 5th port ventilators.

2.7. Drain Connections

Access to a drain or sump is required for HRV condensate. Care should be taken to run the condensate tube where it cannot freeze. To install the drain assembly:

1. Apply the rubber O-ring supplied to the flange of each drain spout (A)
2. Insert the drain spouts through the holes in the drain pan (B)
3. Use the provided nut to tightly secure the drain spout
4. Cut two lengths of drain hose (E) long enough to avoid kinking
5. Attach the hose to the drain spout by sliding it over the spout until it is tight to the bottom of the speed nut. Repeat for the other side
6. Secure the hose to the spout with the plastic tie wraps (D)
7. Install the Tee (F) in either of the two ways shown in the drawings below
8. Attach the free end of the hose to the left fitting. Repeat for the other side
9. Use the remaining hose to form a "P" trap and terminate at the top of the tee
10. Pour approximately one cup of water into the drain assembly to form an air seal. This prevents gasses from being drawn into the HRV/ERV

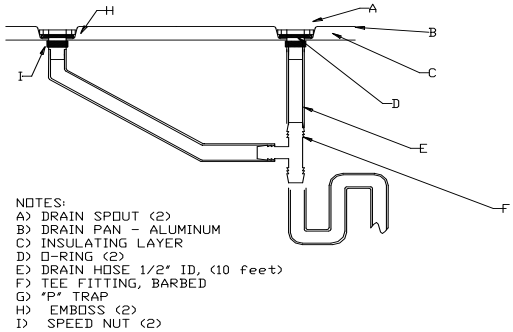

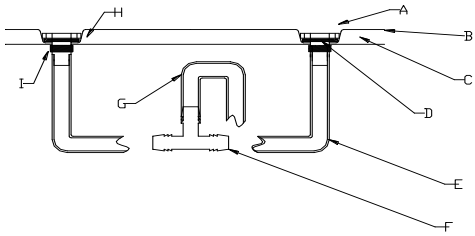

Note for Single-Drain Units

Your unit might be equipped with just one drain and one drain plug. For these models, use the drain hose to form a P-shape after connecting the hose to the drain plug (the arc of the P should be wide enough so as not to cause a kink in the drain hose). Fix the P-shape with one of the (two) plastic cable-ties provided, taking care not to pinch the hose when tightening the cable-tie.

2.8. Furnace Interlock

For simplified (return/return) duct systems, it is mandatory that the HRV be interlocked with the furnace blower such that the furnace fan runs when the HRV is on to distribute supply air throughout the space. For extended exhaust systems, furnace interlock is recommended. Refer to local building codes.

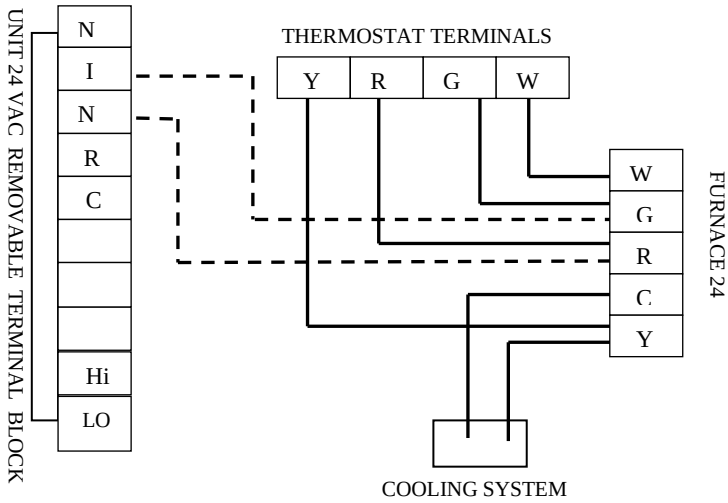

STANDARD FURNACE INTERLOCK

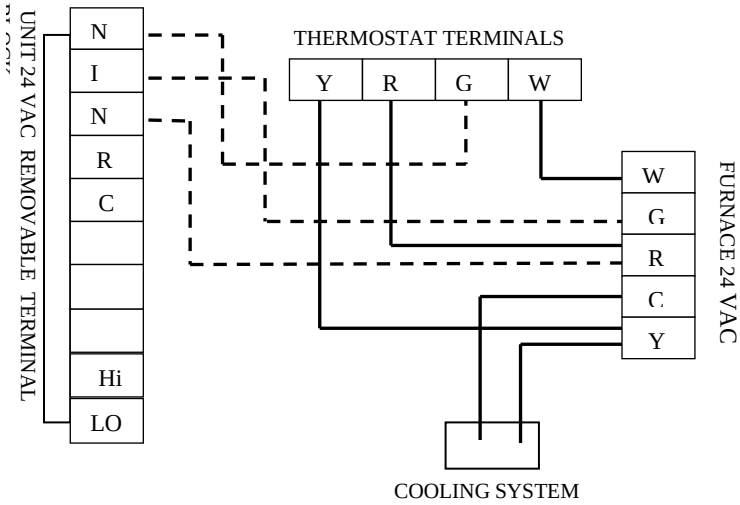

ALTERNATE FURNACE INTERLOCK

If the standard interlocking method has the unwanted effect of bringing on the AC, i.e. thermostats that do not isolate "G" from "Y", use the alternate method shown above.

Depending on local Building Codes, you may choose to interlock whenever the HRV/ERV is operating at any speed, or just high speed. Position 5: interlock at any HRV speed; Position 6: interlock at HRV high speed only.

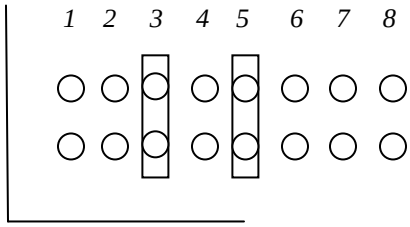

Control board edge

(factory setting shown)

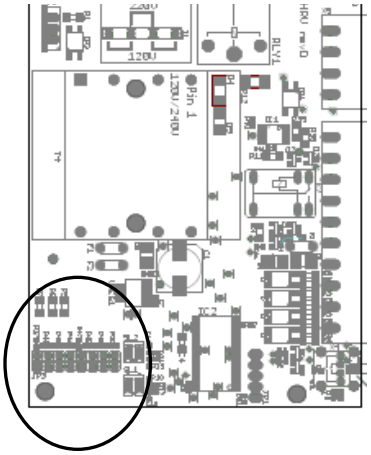

One jumper must be present in jumper range 1-4 and in jumper range 5-8.

Do not alter jumper set 3.

2.9. Balancing Air Flows

Balanced air flow between the supply and exhaust air streams is essential to the performance of an HRV or ERV. With the Windsor Series, changing motor speeds or balancing is quick and simple with two buttons recessed slightly into the unit's cabinet—see next section. NO BALANCING DAMPERS ARE REQUIRED. Once the HRV system is installed and the vapour barrier is completed, ensure the following:

- Close all windows, doors and fireplace dampers
- Turn off any exhaust systems such as dryers, range hoods, bath fans and central vacuums.
- With multiple-speed forced air furnaces in Extended or Simplified systems, the furnace should operate at continuous low speed.
- During balancing, activate high speed on the HRV/ERV by remote control or by temporarily installing a jumper wire between R and Hi on the unit's 10-wire, 24 VAC terminal block.

To balance the air flows, you will need a device to measure air flow. It is recommended to use either a magnehelic gauge or differential pressure digital manometer capable of measuring 0 to 0.5 inch of water (0-125 Pa). Depending on the device you are using, follow one of the two procedures below.

Magnehelic Gauge and Flow Grid:

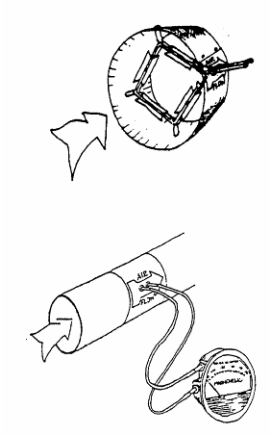

1. Disconnect the flex connector from the rigid duct before any branch ducts. Compress the flex duct and insert the flow grid. Tape the joint between the flow grid and ductwork.
2. Mount the magnehelic gauge level and plumb. Join the hoses from the flow grid to the magnehelic gauge. The needle of the magnehelic gauge should read positively. Switch hose connections if the needle falls below zero.
3. Record reading from gauge and adjust the motor speed to the desired CFM.
4. Repeat the procedure for the next duct. Adjust motor speeds until air flow readings are equal or within 10% of each other.

Magnehelic Gage

Differential Pressure Manometer or Magnehelic Gage and Units with Pressure Ports

NOTE: For 2-door units, the PRESSURE PORT locations might vary from those illustrated here, depending on the orientation of the HRV/ERV.

Manometer

1. Before placing the manometer, reset it to zero. If using a magnehelic gage, ensure the gage is placed plumb and level.
2. According to the air flow to be measured, connect tubing from instrument to EXHAUST air flow or FRESH air flow pressure taps (see illustrations at right).
3. If the readings on your instrument drop below zero, reverse the tubing connections.
4. Take and record pressure readings from each air stream, consulting the air flow chart mounted on the unit's door to determine air flow.
5. Balance air flows so that they equal or within 10% of each other.

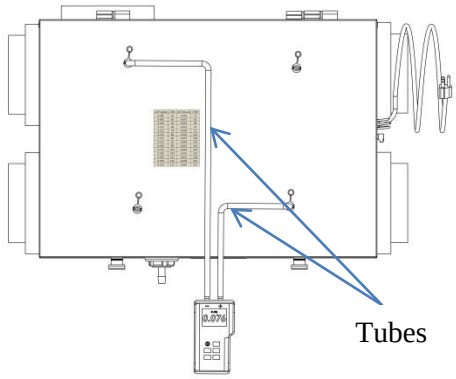

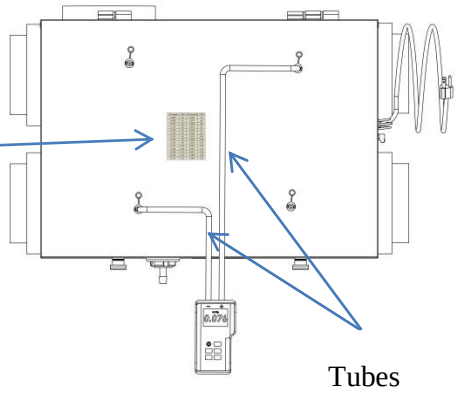

NOTE: ΔP/Airflow values are different for exhaust and supply air streams

Unit Air Flow Chart

ΔP Supply	CFM	ΔP Exhaust	CFM
0.175	104	0.053	119
0.185	109	0.055	124
0.195	115	0.057	128
0.205	121	0.059	133
0.215	127	0.061	137

2.9.1. Adjusting Fan Speed for Balancing and Capacity Requirements

For high-speed adjustment/balancing, use any means to initiate high speed (e.g. ES-M1, R—Hi jumper wire, or engage 24V R—Hi control), then:

1. Press and hold either the FRESH air or EXHAUST air pushbuttons (not both) for 3 Seconds to initiate SPEED ADJUST MODE.

2. Press the corresponding button to adjust the fresh air fan or the exhaust fan speed, thereby changing the air flow. Each press reduces motor speed until the default minimum is reached, at which point the motor will return to its peak speed. Allowing a brief pause between presses (about 0.5 seconds), you will press the adjust button about 70 times before reaching minimum speed. During the balancing procedure, you can switch between adjusting the fresh air motor or exhaust air motor.

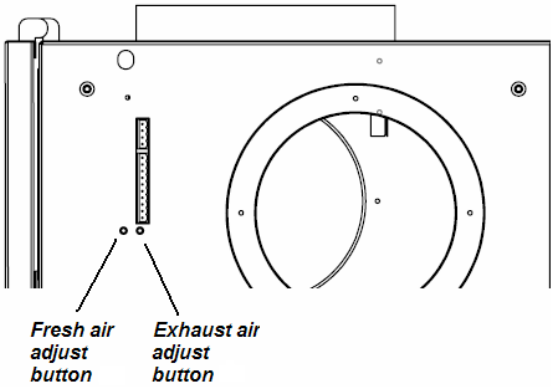

3. To exit balancing/speed adjust mode, stop pressing buttons for 10 seconds. This will place the unit back in operating mode with the new speeds saved to the circuit board's memory.

Low-Speed Adjustment/Balancing. If low speed adjustment is desired, use a jumper wire (R—Lo) or remote control to put the unit into low speed and follow steps 1-3.

3. CONTROL OPTIONS & CONTROL WIRING

Your machine is equipped for remote controls. Options include humidity sensing, off-on control, intermittent and continuous modes, recirculation as well as high speed control from dehumidistat or timer(s). Your unit can accommodate both ES Series and Windsor Series or other 24 VAC controls. Both types of control may be used in the same installation, with ONE type of central control (12 VDC or 24 VAC).Various means of controlling the system are described below.

3.1. ES Series Controls (12 VDC)

3.1.1. ES T*x* and M*x* Controls

ES Series T*x* and M*x* controls are equipped with a touch pad and 3 LED's. The touch pad is used to select mode of operation or turn the appliance off. The LED's indicate mode of operation. ES T*x* and M*x* controls can be used in virtually any number, and can be wired in ***series or in parallel***.

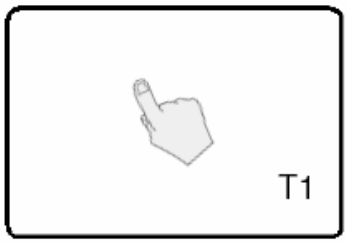

ES T*x* and M*x* Controls and their Functions

Control	Description	Functions
ES-T1	20-40-60 minute timer	Initiates timed high speed when unit is in low speed or standby.
ES-M1	Off, Standby, Low, High	Full-time in standby, low speed or high speed.
ES-M2	Off, Standby, Low, 20 Low/ 40 Standby	Full-time in standby, low speed, or a cycle of 20 min. low speed followed by 40 minutes of standby.
ES-M3	Off, Standby, Low, 20 Low/40 Recirc (low)	Full-time in standby, low speed, or a cycle of 20 min. low speed followed by 40 minutes of low speed recirculation.
ES-M4	Off, Standby, Low, Recirc.	Full-time in standby, low speed, or low speed recirculation.

3.1.2. ES Lumina (p/n NAV-561)

The Lumina offers a complete package of control options in one unit. This product replaces the ES-DVC March 2015.

Features:

- Backlit LCD Screen
- Generously sized navigation keys
- Intuitive user interface
- Interchangeable face plate to mount chosen face plate colour
- On-board humidity sensor can be disabled where chosen
- Built-in 20-20-60-minute timer
- 1-12 month runtime filter alert (factory default 3 mos.)
- Programming option for non-recirculation units

Functions:
Off, Standby, Continuous low speed, Continuous high speed, Intermittent high speed (with humidity call) Continuous recirculation, 20 Lo/40 standby, 20 Lo/40 recirculation

Note: for units manufactured before March 2015 (XXXXX1503…), recirculation functions are to be turned off in "Settings". The Lumina offers all other functions for older units. Upgrading to a circuit board with current firmware is the only option to access recirculation for these older units.

3.1.3. Wiring ES Series Controls

Using a 3 mm flat head screwdriver, connect 4-conductor wire to the 12 VDC (4-wire) removable terminal block provided. Wiring ES controls involves simply matching terminals on the control to those of the HRV/ERV terminal block (see right).

HRV/ERV TERMINAL BLOCK	ES CONTROL
G	GND
A	A BUS
B	B BUS
12	+12V

DO NOT cross the +12V/12 and ground (GND/G) wires. For ES controls, doing so with power connected to the H/ERV might damage the ES wall control processor.

Notes:

1. ES controls can be connected in **SERIES** or **PARALLEL**.
2. 24V control options discussed in this document may be used, but only ONE central control may be employed per installation.
3. If you are using **ONLY ES-T1** to control your unit, with no central controller, you must connect a jumper wire between R and SB on the 24V (10-wire) removable terminal block. In this situation you can add continuous low speed operation by connecting a jumper wire between R and LO. Consult local building code in case a centrally located control with an on/off switch is required.

3.2. Windsor Series Controls & Other 24 V Control Options

Nu-Air offers 24 VAC controls which provide basic functions and easy operation. Other 24 VAC controls might also be used.

Control	Description	Functions and Features
DSTAT-1	dehumidistat	Initiates high speed when ambient humidity exceeds set point.
Win-1	dehumidisat with added features	Off, full-time in standby, low speed, high speed, initiates high speed when ambient humidity exceeds set point.
Win-20	20-minute timer	Initiates high speed when unit in standby or low speed.
Win-20-2	20-minute timer	Initiates high speed when unit in standby or low speed. **Two-wire connection where only 2 wires are available.**
Win-20 Gang	20-minute timer	Initiates high speed when unit in standby or low speed. **Suitable for multi-switch gang boxes.**

3.2.1. Wiring Windsor Series Controls and Other 24 VAC Options

Using a 3 mm flat head screwdriver, connect 2-4-conductor wire according per requirements to the 24 VAC (10-wire) removable terminal block provided.

3.2.1.1. DSTAT-1

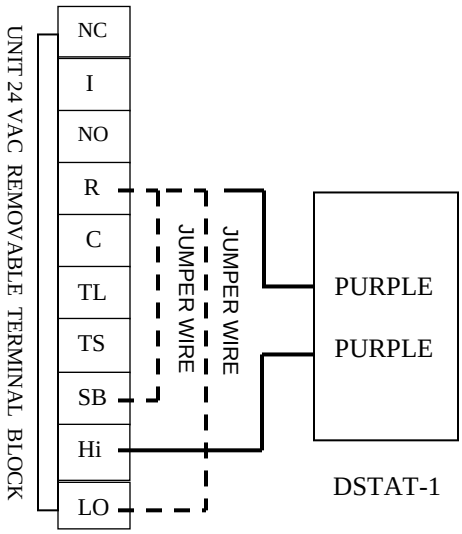

For intermittent high speed operation, connect Nu-Air PN DSTAT-1 to R and Hi terminals.

Jumper Option 1: For continuous low speed, connect jumper wire to R and LO terminals.

Jumper Option 2: A jumper wire between R and SB to engage the unit in **standby mode** when intermittent operation is desired will close off integral outside air damper when present.

Consult local building code in case a centrally located control with an on/off switch is required. Do not employ Jumper option 1 AND Jumper Option 2 in same installation.

3.2.1.2. Win-1

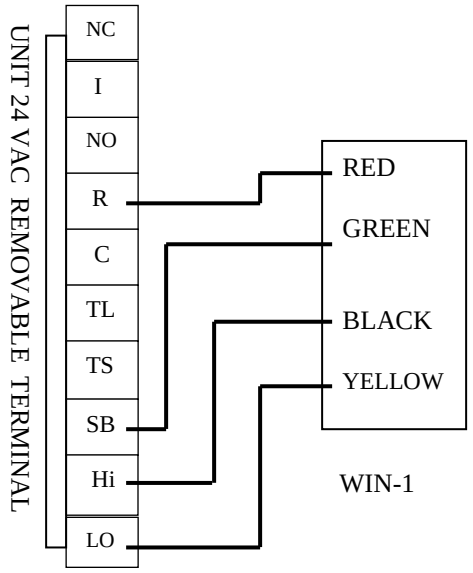

Choose from the following operating modes:

1. Off
2. Standby
3. Continuous low speed
4. Intermittent high speed
5. Continuous high speed (CONSTANT)

3.2.1.3. Win-20

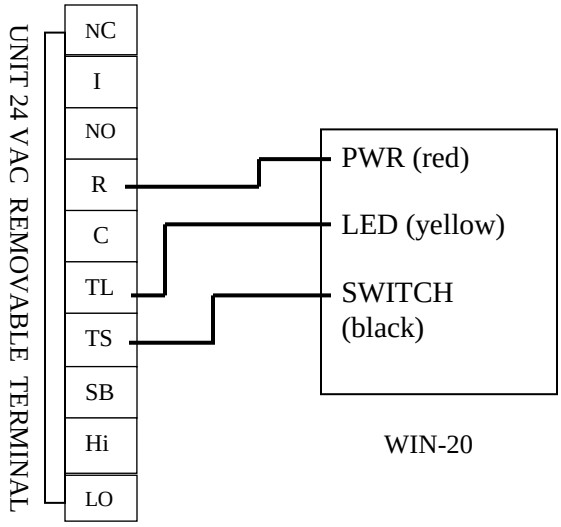

Up to 6 Win-20 timers may run off of one system.

WIN-20 can be combined with ES Series controls or 24V controls discussed in this document.

For Win-20-2 wiring, R and TS terminals are used.

If you are using **ONLY** a **WIN-20(s)** to control your unit, you must connect a jumper wire between R and SB on the 24V (10-wire) removable terminal block. In this situation you can add continuous low speed operation by connecting a jumper wire between R and LO. Consult local building code in case a centrally located control with an on/off switch is required.

3.2.1.4. Remote 2-wire switching

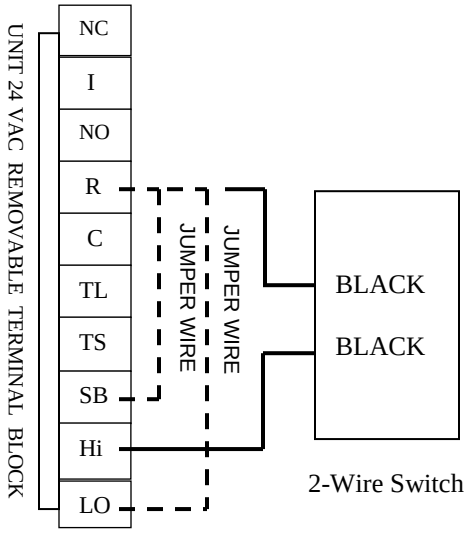

For intermittent high speed operation, connect dedicated (RNC) wall switch, CO_2 sensor, etc. to R and Hi terminals.

Jumper Option 1: For continuous low speed, connect jumper wire to R and LO terminals.

Jumper Option 2: A jumper wire between R and SB to engage the unit in **standby mode** when intermittent operation is desired will close off integral outside air damper when present.

Do not employ Jumper option 1 AND Jumper Option 2 in same installation.

3.3. Status LEDs & Mode of Operation

From mid-April, 2013, all control boards are equipped with status lights to indicate mode of operation.

CONDITION	LED AND STATUS
NO LED	UNIT/TRANSFORMER IS NOT POWERED
UNIT OFF	Red is off, Green is blinking slow, every 1 s. Also indicates processor is programmed and running.
STANDBY	Green is OFF. Red led is blinking slow, every 1 s.
EXHCHANGE LOW SPEED	Green ON. Red blinking slow, every 1 s.
EXCHANGE HIGH SPEED	Green ON. Red blinking fast.
DEFROST	Green ON, Red ON.
RECIRCULATION HIGH SPEED*	Red led ON, Green led blinking fast.

*Where available.

4. START-UP

- Ensure the controls are connected in accordance with Section 3.
- For electrical hook-up, plug into a 120 volt receptacle.
- Ensure that the machine is piped to an adequate drainage source, i.e. through the drain hose supplied.

5. MAINTENANCE

CAUTION: *Disconnect power before servicing.*

Filters
Dirty filters can reduce ventilation efficiency, result in unbalanced airflow and damage or shorten the life of the motors. Vacuum every three months. Polyester filters should typically be replaced every 1-3 years. Filters remove easily by opening the front cover of the unit.

Fans
When cleaning the filters, take the opportunity to vacuum any interior surfaces including the fan blades. No other service is required as these fans are designed to operate continuously without lubrication.

Condensate Drain
Twice per year wipe clean the condensate drain pan. Check the condensate drain and tubing to ensure they are free flowing. The tubing must have an "S" or loop that traps a quantity of water to prevent air from entering the HRV via this tubing.

Heat/Energy Recovery Core
The core (located behind the cover) should be removed and cleaned at least once a year, using a mild detergent in cold water. To remove the cover of the machine, unlatch the two latches; slide the door to right to release from hinges. Fiber-media ERV core must not be washed, rather vacuumed at the interval stated above.

Exterior Hoods
Regularly check the outside vents and clean any obstructions such as grass, leaves or other debris. Do not replace the screen with mesh smaller than 1/4" as this will restrict airflow. During winter operation, ensure snow and frost does not build up and restrict or block openings.

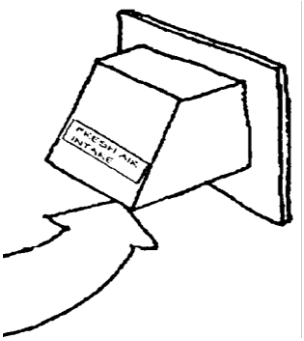

Grills & Duct Work
Clean the grills when they are dusty or greasy with soap and water. Check for punctures in the insulation jacket on the fresh air and exhaust air ducts. Repair any punctures using foil tape.

6. ANNUAL SERVICING:

Your HRV should undergo annual general servicing by an accredited contractor. This servicing should include the following:

a) The six maintenance items above.
b) A general check for proper operation. Controls and electrical connections should be inspected.
c) Verification that intake and exhaust air flows are properly balanced.
d) Re-balancing as necessary.

7. TROUBLE SHOOTING

SYMPTOM	EXPLANATION	ANSWER
The humidity level seems too low.	• HRV air flows incorrectly balanced. • Dehumidistat control set too low. • Lifestyle of the resident(s).	• Balance air flow(s). • Increase dehumidistat. • Humidifiers may need to be added.
The humidity level seems too high.	• HRV air flows incorrectly balanced. • HRV not properly sized for the application • High humidity areas not ventilated properly. • Lifestyle of resident(s). • Dehumidistat is not working.	• Balance airflow. • Set dehumidistat. • Cover pools etc. when not in use. • Avoid hanging clothes to dry, storing wood and venting clothes dryer inside.
The house is dry but the basement wet.	• High humidity during summer months	• Install a programmable timer on 12-hour cycle. On at night. Off during the day. • Partially close some grills upstairs, open grills in basement.
The Controls or Dehumidistat are not working.	• Incorrect connection of outside low voltage wiring between HRV and dehumidistat.	• Check control wiring for short • Check wall switch for correct connection. • Check wires are connected to proper terminals at the HRV
There is Frosting up of the HRV and/or duct(s).	• HRV air flows incorrectly balanced. • HRV defrost system is not working.	• Balance HRV. • Check integral damper function (where present). Install back draft dampers as needed. • Check defrost system. • Note minimal frost build up is expected on cores before unit initiates defrost cycle function.
The supply air feels cool.	• HRV air flows incorrectly balanced. • Improper location of supply grills. • Extremely cold outside temperatures. • Moving air feels cooler than it actually is.	• Balance HRV. • Locate grills high on walls or in ceiling. • If supply air is installed into return line of furnace, furnace fan must run continuously on low speed.
The outside duct has ice build up or condensation.	• Improperly installed vapour barrier around insulated duct.	• Tape all joints. • Ensure that vapour barrier is completely sealed and insulated.
There is water in the bottom of HRV.	• Drain pans are plugged. • Incorrect connections of HRV's drain lines. • HRV is not level. • Drain lines plugged. • HRV heat exchange core improperly installed.	• Look for kinks in the line. • Check water drain connections. • Ensure that water drains from pan.
There is poor air flow(s)	• HRV airflow incorrectly balanced. • Filters need to be cleaned. • Mesh on outside hoods needs to be cleaned. • Grills are closed. • Present dampers are closed. • Low power supply. • Wrong-size ducting. • Under-sized HRV. • HRV is not working.	• Tape all joints. • Use proper air flow measuring equipment. • Open grills. • Remove obstructions in duct(s), hoods(s), and grill(s). • Balance air flows. • Clean filter. • Have a professional look at the system.

IMPORTANT! Only qualified technicians should service controls or internal components.

8. ELECTRICAL SCHEMATICS

NU165

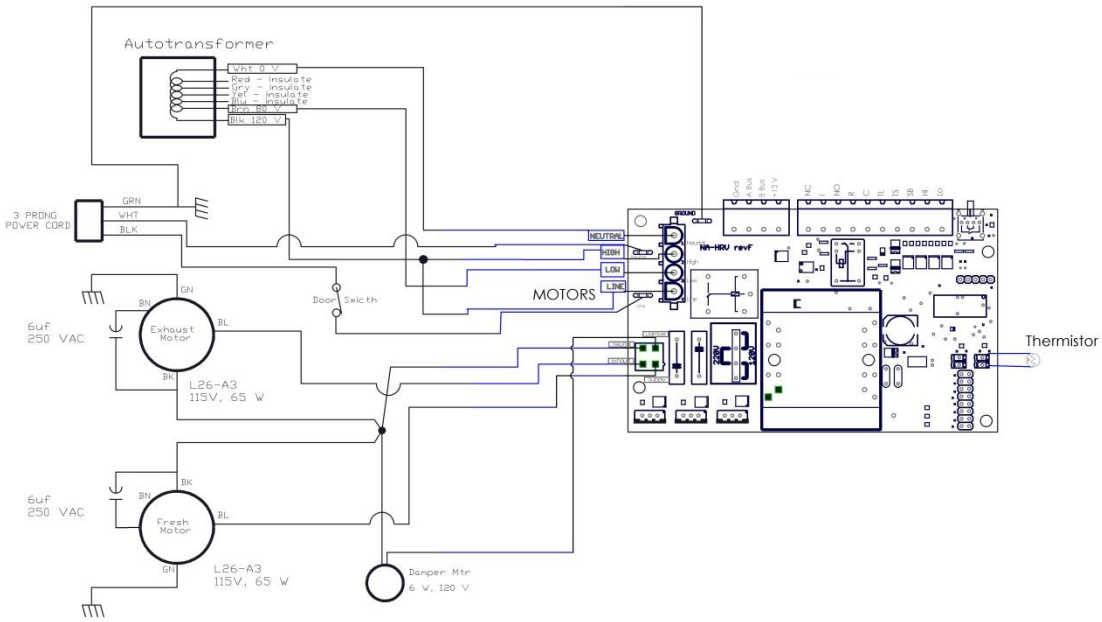

p/n 50321 NA-HRV rev F

NU145

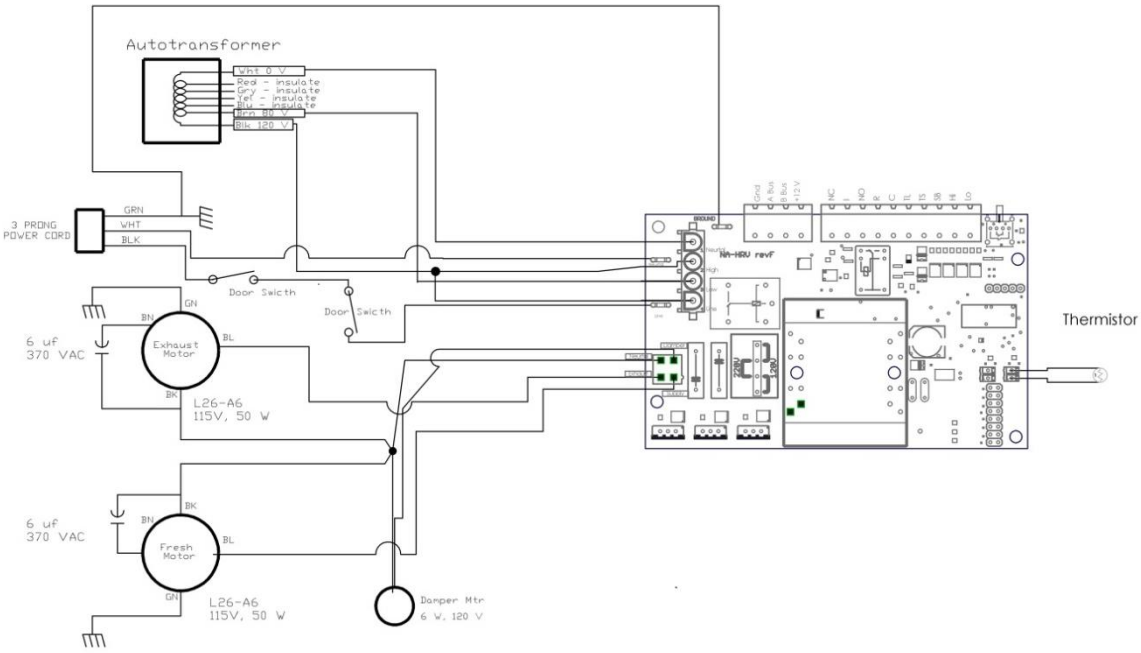

p/n 50321 NA-HRV rev F

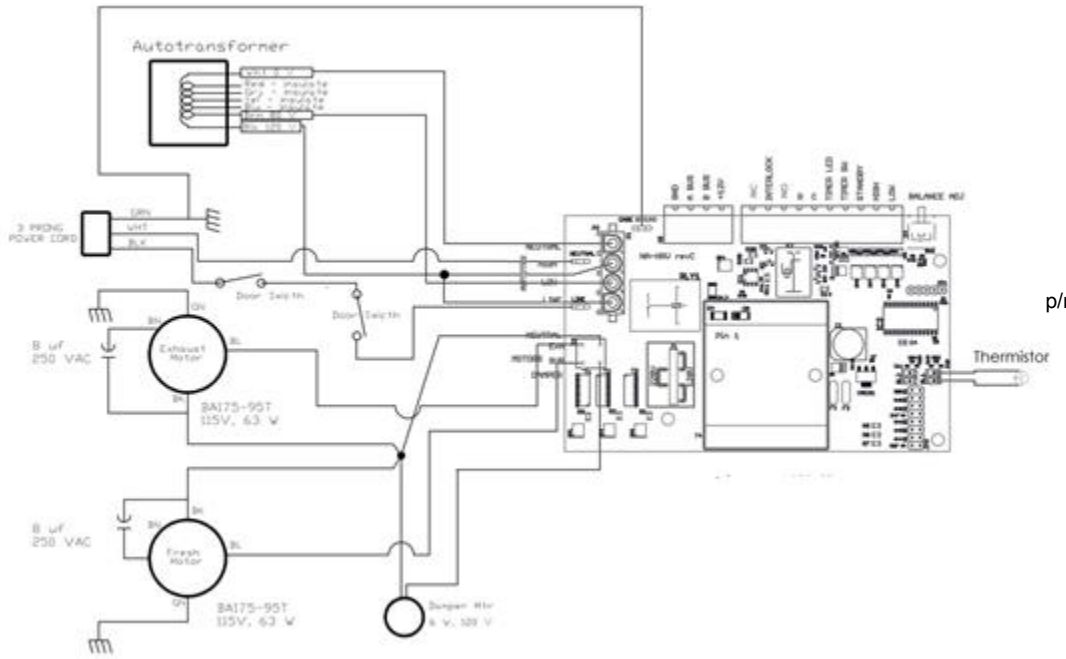

p/n 50321 NA-HRV rev F

9. WARRANTIES

Your *NU-AIR* ES Series Heat Recovery Ventilator Transferable Warranty
For Canada and United States

For Windsor Series HRVs.

Should your **NU-AIR** Windsor Series Heat Recovery Ventilator (HRV) cease to function within three (3) years of the date of original purchase (effective March 1, 2015) due to defective material or workmanship of the product, **NU-AIR** Ventilation Systems Inc. will supply a new or rebuilt part FOB Factory to replace the defective part. Delivery, installation, and labour cost are not covered by this warranty.

Lifetime HRV Core Warranty

If the recovery plastic core in your **NU-AIR** Heat Recovery Ventilator fails due to a defect in material or workmanship **NU-AIR** Ventilation Systems Inc. will supply a new core FOB Factory to replace the defective part. Delivery and labour costs are your responsibility.

Nu-Air warrants its ERV core to be free from manufacturing defects for a period of five (5) years.

Warranty Limitations

The above warranty does not cover damage to the unit while in your possession (other than damages caused by defective parts or material) due to the following: 1) improper installation or unreasonable use of unit: 2) failure to provide reasonable and necessary maintenance. If the unit is put to commercial use or application other than residential use, warranty is for a period of one (1) year.

nu-air
Sustainability Through Innovation

P.O. Box 2758 Windsor, Nova Scotia
Canada B0N 2T0
Phone: 902 798 2261 Fax: 902 798 2557
Email: nuair@nu-airventilation.com
Website: www.nu-airventilation.com

10. NOTES/SERVICE RECORD