INSTALLATION INSTRUCTIONS

A93UH1E & 92G1UHE

Warm Air Gas Furnace

Upflow/Horizontal Left and Right Air Discharge

This manual must be left with the homeowner for future reference.

This is a safety alert symbol and should never be ignored. When you see this symbol on labels or in manuals, be alert to the potential for personal injury or death.

Table of Contents

Unit Dimensions 2
Parts Arrangement....3
Gas Furnace....4
Shipping and Packing List 4
Safety Information 4
General....6
Combustion, Dilution & Ventilation Air 7
Installation 10
Filters....13
Duct System 13
Venting Practices....16
Condensate Piping 33
Gas Piping 36
Electrical 39
Unit Start-Up....42
Testing for Proper Venting and Sufficient Combustion Air for Non-Direct Vent Applications 46
Other Unit Adjustments....46
Blower Performance A93UH1E & 92G1UHE 48
Service....51
Planned Service 54
Repair Parts List....54

WARNING

Improper installation, adjustment, alteration, service or maintenance can cause property damage, personal injury or loss of life. Installation and service must be performed by a licensed professional installer (or equivalent), service agency or the gas supplier.

CAUTION

As with any mechanical equipment, personal injury can result from contact with sharp sheet metal edges. Be careful when you handle this equipment.

Manufactured By
Allied Air Enterprises LLC
A Lennox International, Inc. Company
215 Metropolitan Drive
West Columbia, SC 29170

(P) 507867-02

Save these instructions for future reference

Unit Dimensions

1 NOTE - 20C (5 Ton) size units installed in upflow applications that require air volumes of 1800 cfm (850 L/s) or greater must have one of the following:

1. Single side return air with transition, to accommodate 20 x 25 x 1 in. (508 x 635 x 25 mm) cleanable air filter. (Required to maintain proper air velocity.)
2. Single side return air with optional “RAB” **R**eturn **A**ir **B**ase.
3. Bottom return air.
4. Return air from both sides.
5. Bottom and one side return air.

See Blower Performance tables for additional information.

2 Optional External Side Return Air Filter kit is not for use with optional Return Air Base.

* Consider sizing requirements for optional IAQ equipment before cutting side return opening.

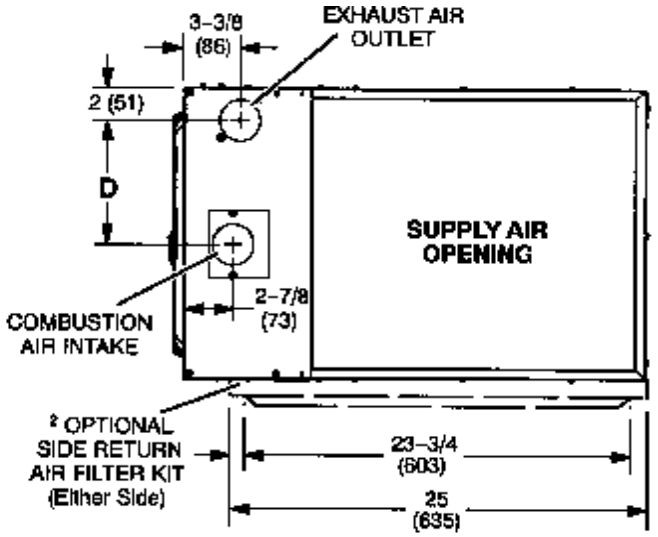

TOP VIEW

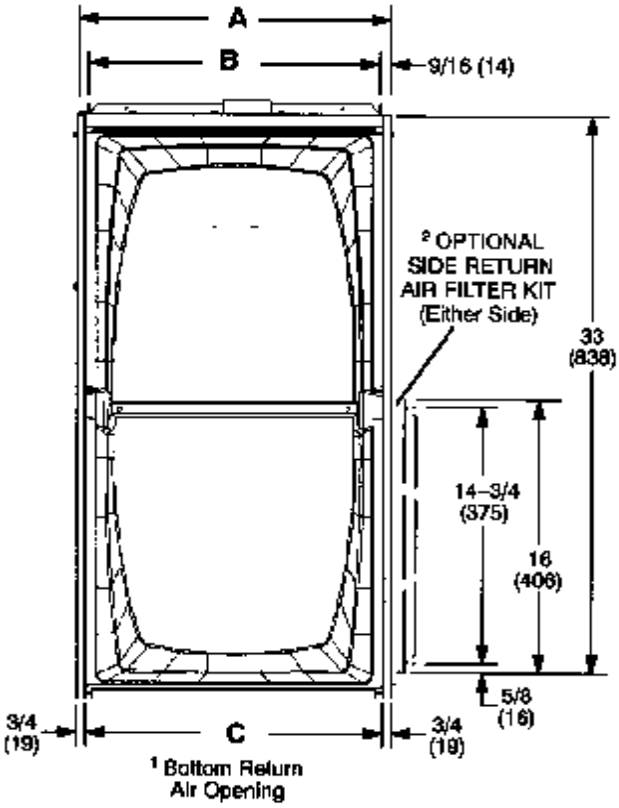

FRONT VIEW

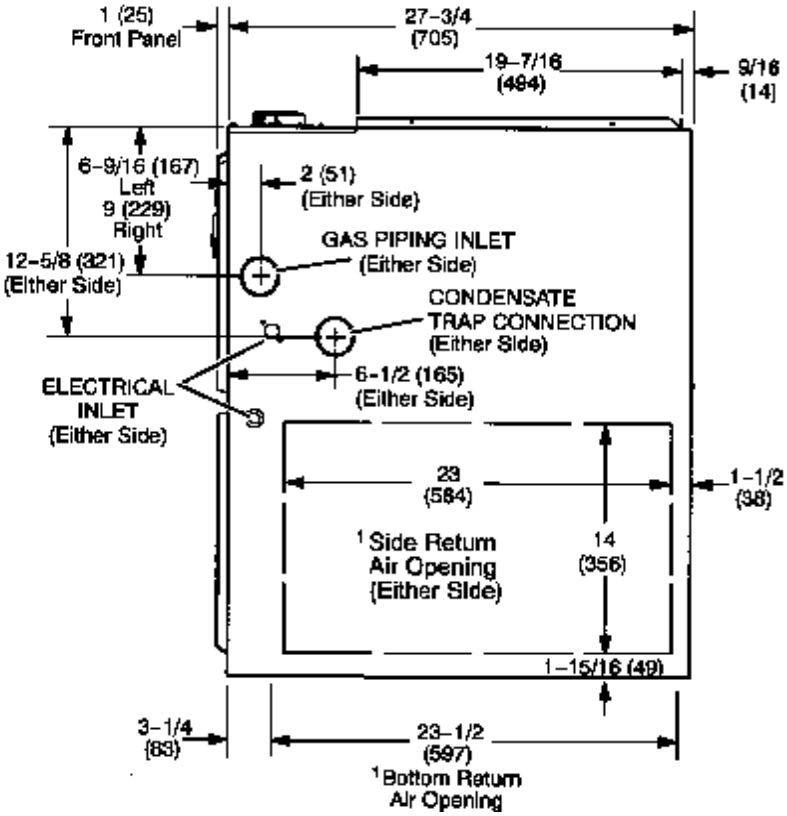

SIDE VIEW

A93UH1E / 92G1UHE	A		B		C		D	
Capacity	in.	mm	in.	mm	in.	mm	in.	mm
030-12 045-12 070-12	17-1/2	446	16-3/8	416	16	406	1-5/8	194
090-12 090-16 110-16 110-20	21	533	19-7/8	505	19-1/2	495	9-3/8	238

Parts Arrangement

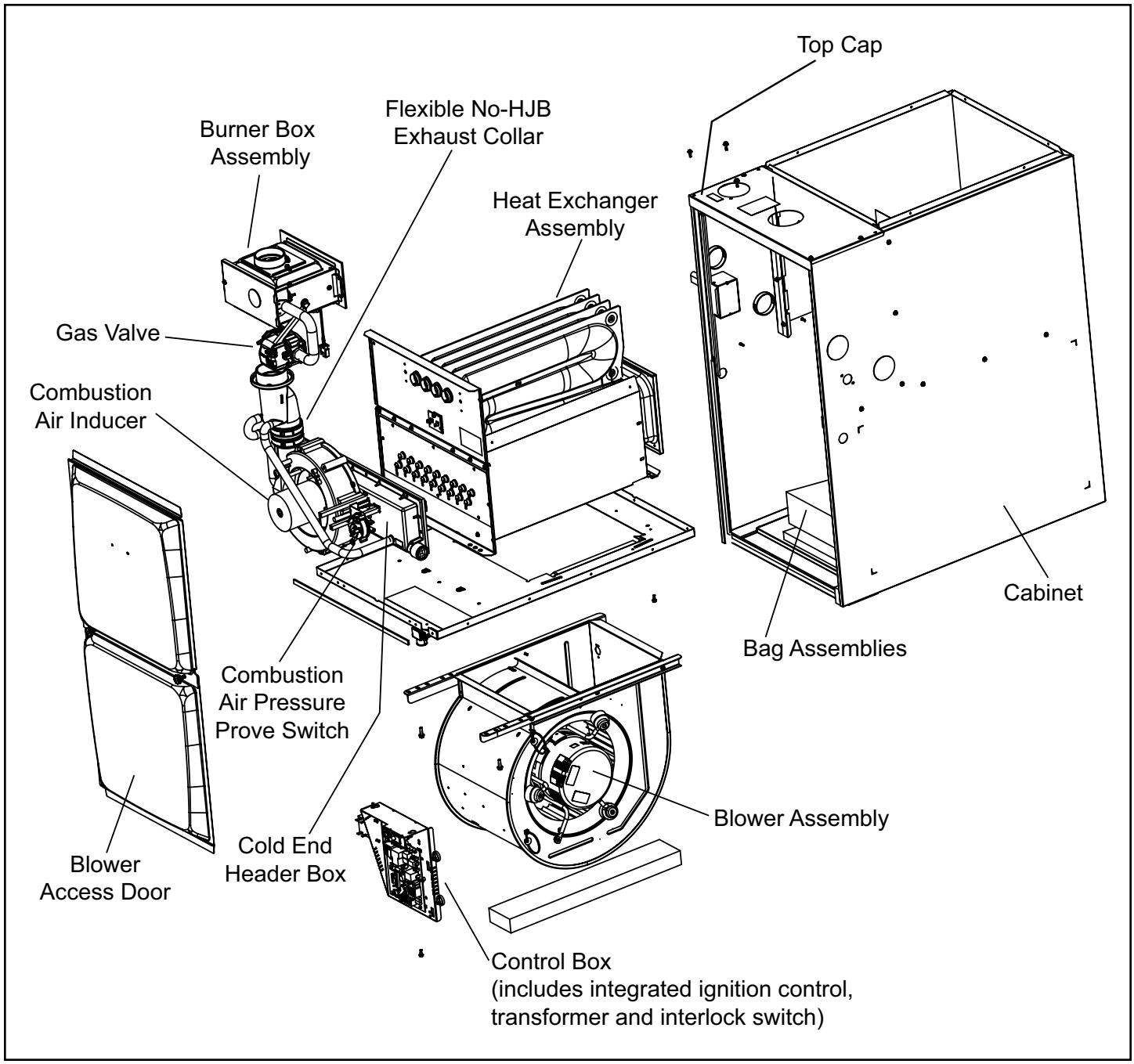

Figure 1.

Gas Furnace

The A93UH1E & 92G1UHE Category IV gas furnace is shipped ready for installation in the upflow or horizontal position. The furnace is shipped with the bottom panel in place. The bottom panel must be removed if the unit is to be installed in horizontal or upflow applications with bottom return air.

The A93UH1E & 92G1UHE can be installed as either a Direct Vent or a Non-Direct Vent gas central furnace

The furnace is equipped for installation in natural gas applications. A conversion kit (ordered separately) is required for use in propane/LP gas applications.

NOTE: *In Direct Vent installations, combustion air is taken from outdoors and flue gases are discharged outdoors. In Non-Direct Vent installations, combustion air is taken from indoors and flue gases are discharged outdoors. See Figure 2 and Figure 3 for applications involving roof termination.*

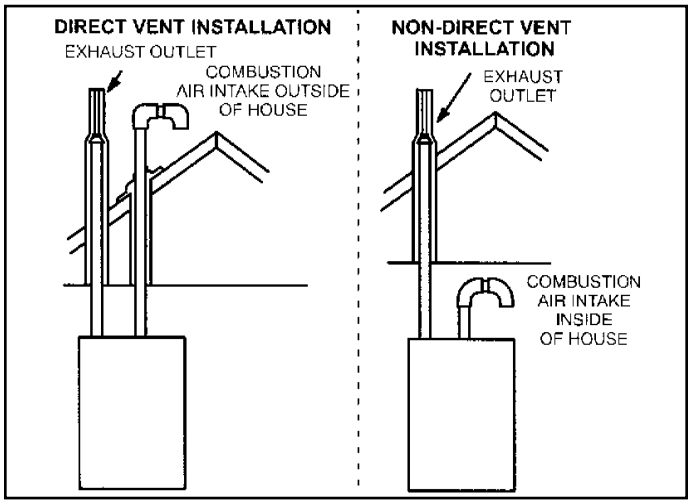

Figure 2.

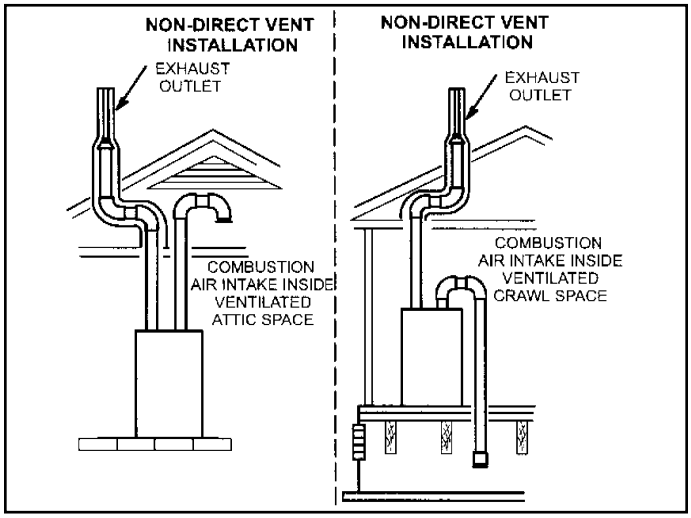

Figure 3.

Shipping and Packing List

1 - Assembled Gas Furnace

1 - Bag assembly containing the following:

- 1 - Snap bushing
- 1 - Snap Plug
- 1 - Wire tie
- 1 - Condensate trap
- 1 - Condensate trap cap
- 1 - Condensate trap clamp
- 1 - 2” diameter debris screen
- 1 - 3/4” Threaded street elbow

Check equipment for shipping damage. If you find any damage, immediately contact the last carrier.

Please refer to specification sheets for available accessories

Safety Information

⚠ WARNING

Improper installation, adjustment, alteration, service or maintenance can cause property damage, personal injury or loss of life. Installation and service must be performed by a licensed professional installer (or equivalent), service agency or the gas supplier.

⚠ CAUTION

As with any mechanical equipment, personal injury can result from contact with sharp sheet metal edges. Be careful when you handle this equipment.

⚠ DANGER

DANGER OF EXPLOSION!

There are circumstances in which odorant used with LP/Propane gas can lose its scent. In case of a leak, LP/Propane gas will settle close to the floor and may be difficult to smell. An LP/Propane leak detector should be installed in all LP applications.

Use only the type of gas approved for use with this furnace. Refer to unit nameplate.

A93UH1E & 92G1UHE units are CSA International certified to ANSI Z21.47 and CSA 2.3 standards.

Building Codes

In the USA, installation of gas furnaces must conform with local building codes. In the absence of local codes, units must be installed according to the current National Fuel Gas Code (ANSI Z223.1/NFPA 54). The National Fuel Gas Code is available from the American National Standards Institute, Inc., 11 West 42nd Street, New York, NY 10036.

In Canada, installation must conform with current National Standard of Canada CSA-B149 Natural Gas and Propane Installation Codes, local plumbing or waste water codes and other applicable local codes.

In order to ensure proper unit operation in non-direct vent applications, combustion and ventilation air supply must be provided according to the current National Fuel Gas Code or CSA-B149 standard.

Installation Locations

This furnace is CSA International certified for installation clearances to combustible material as listed on the unit nameplate and in the table in Figure 13 and Figure 18. Accessibility and service clearances must take precedence over fire protection clearances.

NOTE: *For installation on combustible floors, the furnace shall not be installed directly on carpeting, tile, or other combustible material other than wood flooring.*

For installation in a residential garage, the furnace must be installed so that the burner(s) and the ignition source are located no less than 18 inches (457 mm) above the floor. The furnace must be located or protected to avoid physical damage by vehicles. When a furnace is installed in a public garage, hangar, or other building that has a hazardous atmosphere, the furnace must be installed according to recommended good practice requirements and current National Fuel Gas Code or CSA B149 standards.

NOTE: *Furnace must be adjusted to obtain a temperature rise within the range specified on the unit nameplate. Failure to do so may cause erratic limit operation and premature heat exchanger failure.*

This furnace must be installed so that its electrical components are protected from water.

Installed in Combination with a Cooling Coil

When this furnace is used with cooling units (Figure 4), it shall be installed in parallel with, or on the upstream side of, cooling units to avoid condensation in the heating compartment. With a parallel flow arrangement, a damper (or other means to control the flow of air) must adequately prevent chilled air from entering the furnace. If the damper is manually operated, it must be equipped to prevent operation of either the heating or the cooling unit, unless it is in the full HEAT or COOL setting.

When installed, this furnace must be electrically grounded according to local codes. In addition, in the United States, installation must conform with the current National Electric Code, ANSI/NFPA No. 70. The National Electric Code (ANSI/NFPA No. 70) is available from the following address:

National Fire Protection Association
1 Battery March Park
Quincy, MA 02269

In Canada, all electrical wiring and grounding for the unit must be installed according to the current regulations of the Canadian Electrical Code Part I (CSA Standard C22.1) and/or local codes.

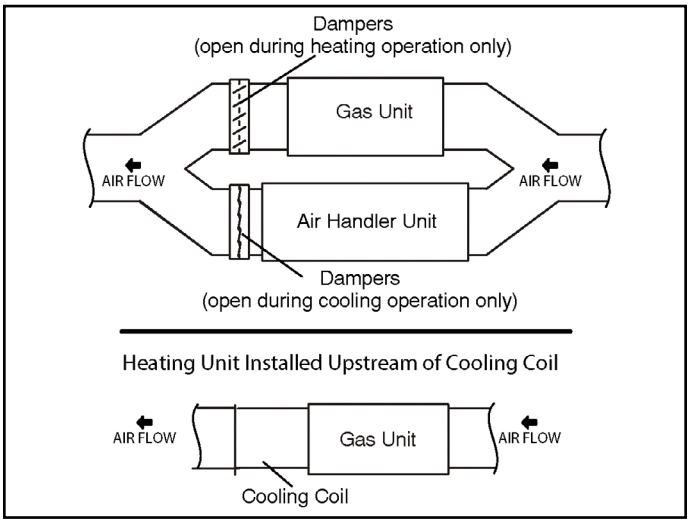

Figure 4. Heating Unit Installed Parallel to Air Handler Unit

NOTE: *This furnace is designed for a minimum continuous return air temperature of 60°F (16°C) or an intermittent operation down to 55°F (13°C) dry bulb for cases where a night setback thermostat is used. Return air temperature must not exceed 85°F (29°C) dry bulb.*

This furnace may be installed in alcoves, closets, attics, basements, garages, and utility rooms in the upflow or horizontal position.

This furnace design has not been CSA certified for installation in mobile homes, recreational vehicles, or outdoors.

Use of Furnace as a Construction Heater

Units may be used for heating of buildings or structures under construction, if the following conditions are met to ensure proper operation.

DO NOT USE THE UNIT FOR CONSTRUCTION HEAT UNLESS ALL OF THE FOLLOWING CRITERIA ARE MET:

a. Furnace must be in its final location. The vent system must be permanently installed per these installation instructions.

b. Furnace must be installed as a two pipe system and one hundred percent (100%) outdoor air must be provided for combustion air requirements during construction.

c. A room thermostat must control the furnace. The use of fixed jumpers that will provide continuous heating is prohibited.

d. The input rate and temperature rise must be set per the furnace rating plate.

e. Supply and Return air ducts must be provided and sealed to the furnace. Return air must be terminated outside of the space where furnace is installed.

f. Return air temperature range between 60°F (16°C) and 80°F (27°C) must be maintained.

g. MERV 11 or greater air filters must be installed in the system and must be regularly inspected and maintained (e.g., regular static checks and replaced at end of life) during construction.

h. Blower and vestibule access panels must be in place on the furnace at all times.

i. The furnace heat exchanger, components, duct system, and evaporator coils must be thoroughly cleaned following final construction clean−up.

j. Air filters must be replaced upon construction completion.

k. All furnace operating conditions (including ignition, input rate, temperature rise and venting) must be verified in accordance with these installation instructions.

EQUIPMENT MAY EXPERIENCE PREMATURE COMPONENT FAILURE AS A RESULT OF FAILURE TO FOLLOW THE ABOVE INSTALLATION INSTRUCTIONS. FAILURE TO FOLLOW THE ABOVE INSTALLATION INSTRUCTIONS VOIDS THE MANUFACTURER'S EQUIPMENT LIMITED WARRANTY. ALLIED AIR DISCLAIMS ALL LIABILITY IN CONNECTION WITH INSTALLER'S FAILURE TO FOLLOW THE ABOVE INSTALLATION INSTRUCTIONS.

NOTWITHSTANDING THE FOREGOING, INSTALLER IS RESPONSIBLE FOR CONFIRMING THAT THE USE OF CONSTRUCTION HEAT IS CONSISTENT WITH THE POLICIES AND CODES OF ALL REGULATING ENTITIES. ALL SUCH POLICIES AND CODES MUST BE ADHERED TO.

General

These instructions are intended as a general guide and do not supersede local codes in any way. Consult authorities having jurisdiction before installation.

In addition to the requirements outlined previously, the following general recommendations must be considered when installing one of these furnaces:

- Place the furnace as close to the center of the air distribution system as possible. The furnace should also be located close to the vent termination point.
- When the furnace is installed in non-direct vent applications, do not install the furnace where drafts might blow directly into it. This could cause improper combustion and unsafe operation.
- When the furnace is installed in non-direct vent applications, do not block the furnace combustion air opening with clothing, boxes, doors, etc. Air is needed for proper combustion and safe unit operation.
- When the furnace is installed in an attic or other insulated space, keep insulation away from the furnace.
- When the furnace is installed in an unconditioned space, consider provisions required to prevent freezing of condensate drain system.

NOTE: *The Commonwealth of Massachusetts stipulates these additional requirements:*

- Gas furnaces shall be installed by a licensed plumber or fitter only.
- The gas cock must be "T handle" type.
- When a furnace is installed in an attic, the passageway to and service area surrounding the equipment shall be floored.

⚠ CAUTION

These units should not be installed in areas normally subject to freezing temperatures.

Combustion, Dilution & Ventilation Air

If this unit is installed as a Non-Direct Vent Furnace, follow the guidelines in this section.

NOTE: *In Non-Direct Vent Installations, combustion air is taken from indoors and flue gases are discharged outdoors.*

⚠ WARNING

Insufficient combustion air can cause headaches, nausea, dizziness or asphyxiation. It will also cause excess water in the heat exchanger resulting in rusting and premature heat exchanger failure. Excessive exposure to contaminated combustion air will result in safety and performance related problems. Avoid exposure to the following substances in the combustion air supply:

- Permanent wave solutions
- Chlorinated waxes and cleaners
- Chlorine base swimming pool chemicals
- Water softening chemicals
- De-icing salts or chemicals
- Carbon tetrachloride
- Halogen type refrigerants
- Cleaning solvents (such as perchloroethylene)
- Printing inks, paint removers, varnishes, etc.
- Hydrochloric acid
- Cements and glues
- Antistatic fabric softeners for clothes dryers
- Masonry acid washing materials

In the past, there was no problem in bringing in sufficient outdoor air for combustion. Infiltration provided all the air that was needed. In today's homes, tight construction practices make it necessary to bring in air from outside for combustion. Take into account that exhaust fans, appliance vents, chimneys, and fireplaces force additional air that could be used for combustion out of the house.

Unless outside air is brought into the house for combustion, negative pressure (outside pressure is greater than inside pressure) will build to the point that a down draft can occur in the furnace vent pipe or chimney. As a result, combustion gases enter the living space creating a potentially dangerous situation.

In the absence of local codes concerning air for combustion and ventilation, use the guidelines and procedures in this section to install these furnaces to ensure efficient and safe operation. You must consider combustion air needs and requirements for exhaust vents and gas piping. A portion of this information has been reprinted with permission from the National Fuel Gas Code (ANSI-Z223.1/NFPA 54). This reprinted material is not the complete and official position of ANSI on the referenced subject, which is represented only by the standard in its entirely.

In Canada, refer to the CSA B149 Installation codes.

⚠ CAUTION

Do not install the furnace in a corrosive or contaminated atmosphere. Meet all combustion and ventilation air requirements, as well as all local codes.

All gas-fired appliances require air for the combustion process. If sufficient combustion air is not available, the furnace or other appliance will operate inefficiently and unsafely. Enough air must be provided to meet the needs of all fuel-burning appliances and appliances such as exhaust fans which force air out of the house. When fireplaces, exhaust fans, or clothes dryers are used at the same time as the furnace, much more air is required to ensure proper combustion and to prevent a down draft. Insufficient air causes incomplete combustion which can result in carbon monoxide.

In addition to providing combustion air, fresh outdoor air dilutes contaminants in the indoor air. These contaminants may include bleaches, adhesives, detergents, solvents and other contaminants which can corrode furnace components.

The requirements for providing air for combustion and ventilation depend largely on whether the furnace is installed in an unconfined or a confined space.

Unconfined Space

An unconfined space is an area such as a basement or large equipment room with a volume greater than 50 cubic feet (1.42 m³) per 1,000 Btu (.29 kW) per hour of the combined input rating of all appliances installed in that space. This space also includes adjacent rooms which are not separated by a door. Though an area may appear to be unconfined, it might be necessary to bring in outdoor air for combustion if the structure does not provide enough air by infiltration. If the furnace is located in a building of tight construction with weather stripping and caulking around the windows and doors, follow the procedures in the "Air from Outside" section.

Confined Space

A confined space is an area with a volume less than 50 cubic feet (1.42 m³) per 1,000 Btu (.29 kW) per hour of the combined input rating of all appliances installed in that space. This definition includes furnace closets or small equipment rooms.

When the furnace is installed so that supply ducts carry air circulated by the furnace to areas outside the space containing the furnace, the return air must be handled by ducts which are sealed to the furnace casing and which terminate outside the space containing the furnace. This is especially important when the furnace is mounted on a platform in a confined space such as a closet or small equipment room. Even a small leak around the base of the unit at the platform or at the return air duct connection can cause a potentially dangerous negative pressure condition. Air for combustion and ventilation can be brought into the confined space either from inside the building or from outside.

Air from Inside

If the confined space that houses the furnace adjoins a space categorized as unconfined, air can be brought in by providing two permanent openings between the two spaces. Each opening must have a minimum free area of 1 square inch (645 mm²) per 1,000 Btu (.29 kW) per hour of total input rating of all gas-fired equipment in the confined space. Each opening must be at least 100 square inches (64516 mm²). One opening shall be within 12 inches (305 mm) of the top of the enclosure and one opening within 12 inches (305 mm) of the bottom. See Figure 5.

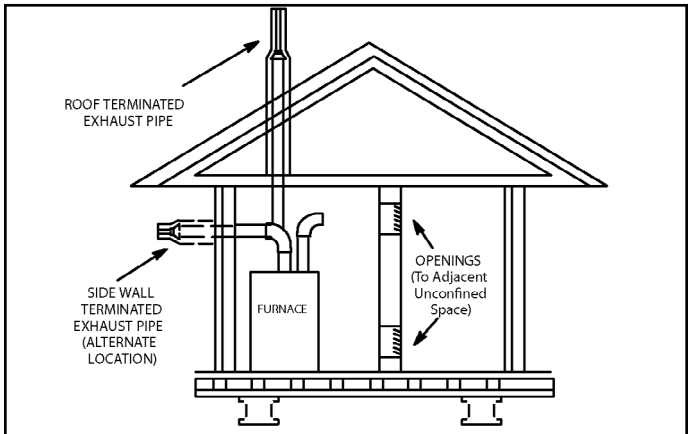

NOTE – Each opening shall have a free area of at least one square inch per 1,000 Btu (645 mm^2 per .29kW) per hour of the total input rating of all equipment in the enclosure, but not less than 100 square inches (64516 mm^2).

Figure 5. Equipment in Confined Space - All Air From Inside

Air from Outside

If air from outside is brought in for combustion and ventilation, the confined space shall be provided with two permanent openings. One opening shall be within 12” (305 mm) of the top of the enclosure and one within 12” (305 mm) of the bottom. These openings must communicate directly or by ducts with the outdoors or spaces (crawl or attic) that freely communicate with the outdoors or indirectly through vertical ducts. Each opening shall have a minimum free area of 1 square inch per 4,000 Btu (645 mm² per .59 kW) per hour of total input rating of all equipment in the enclosure (see Figure 6 and Figure 7). It is also permissible to bring in air for combustion from a ventilated attic (Figure 8) or ventilated crawl space (Figure 9).

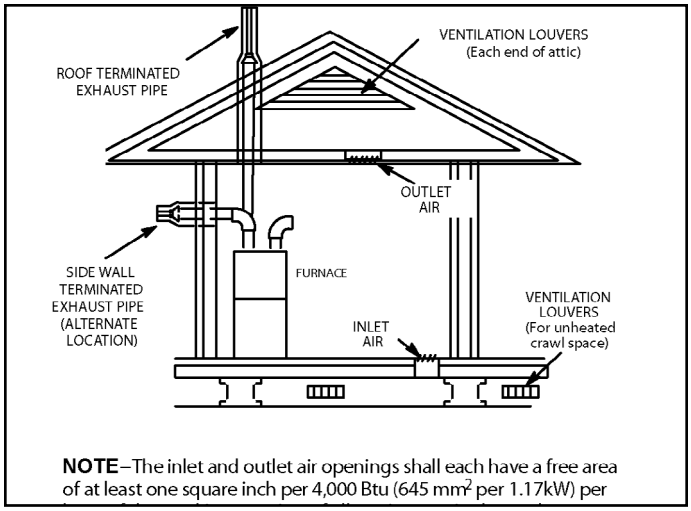

NOTE–The inlet and outlet air openings shall each have a free area of at least one square inch per 4,000 Btu (645 mm^2 per 1.17kW) per

Figure 6. Equipment in Confined Space - All Air from Outside
(Inlet Air from Crawl Space and Outlet Air to Ventilated Attic)

When communicating with the outdoors through horizontal ducts, each opening shall have a minimum free area of 1 square inch (645 mm²) per 2,000 Btu (.56 kW) per total input rating of all equipment in the enclosure. See Figure 10.

When ducts are used, they shall be of the same cross-sectional area as the free area of the openings to which they connect. The minimum dimension of rectangular air ducts shall be no less than 3 inches (75 mm). In calculating free area, the blocking effect of louvers, grilles, or screens must be considered. If the design and free area of protective covering is not known for calculating the size opening required, it may be assumed that wood louvers will have 20 to 25 percent free area and metal louvers and grilles will have 60 to 75 percent free area. Louvers and grilles must be fixed in the open position or interlocked with the equipment so that they are opened automatically during equipment operation.

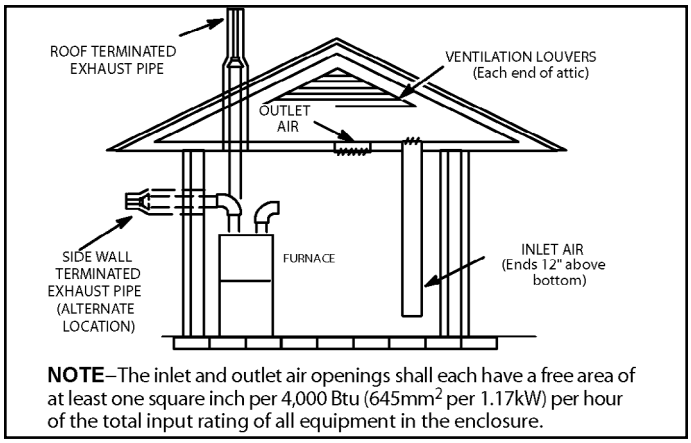

NOTE–The inlet and outlet air openings shall each have a free area of at least one square inch per 4,000 Btu (645mm^2 per 1.17kW) per hour of the total input rating of all equipment in the enclosure.

Figure 7. Equipment in Confined Space - All Air from Outside
(All Air through Ventilated Attic)

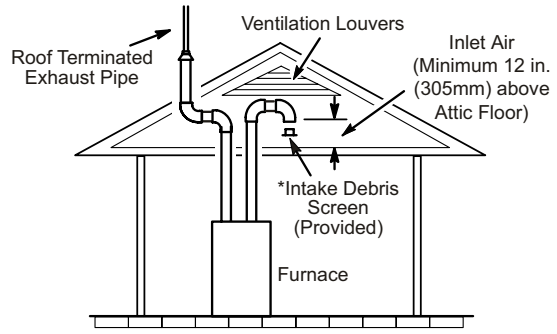

* See Maximum Vent Lengths table

NOTE: The inlet and outlet air openings shall each have a free area of at least one square inch per 4,000 Btu (645 mm^2 per 1.17 kW) per hour of the total input rating of all equipment in the enclosure.

Figure 8. Equipment in Confined Space (Inlet Air from Ventilated Attic & Outlet Air to Outside)

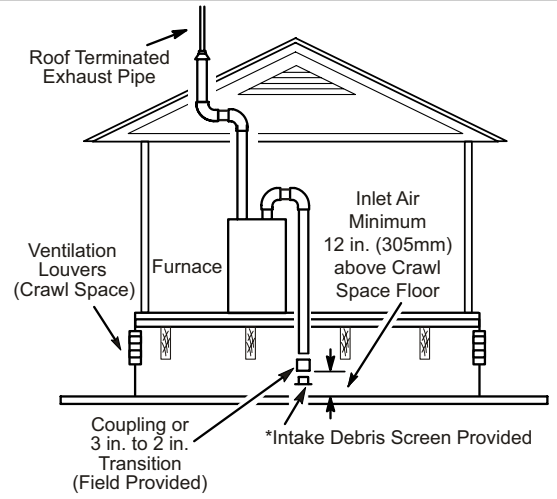

* See Maximum Vent Lengths table

NOTE: The inlet and outlet air openings shall each have a free area of at least one square inch per 4,000 Btu (645 mm^2 per 1.17 kW) per hour of the total input rating of all equipment in the enclosure.

Figure 9. Equipment in Confined Space (Inlet Air from Ventilated Crawl Space & Outlet Air to Outside)

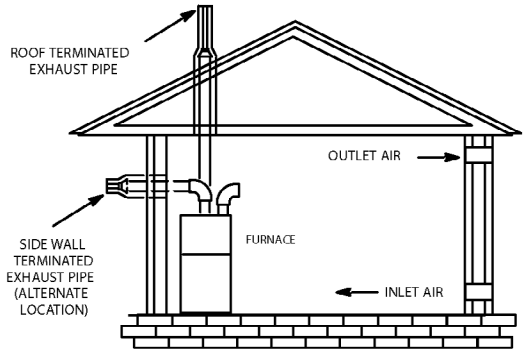

NOTE–Each air duct opening shall have a free area of at least one square inch per 2,000 Btu (645 mm^2 per .59kW) per hour of the total input rating of all equipment in the enclosure. If the equipment room is located against an outside wall and the air openings communicate directly with the outdoors, each opening shall have a free area of at least 1 square inch per 4,000 Btu (645 mm^2 per 1.17kW) per hour of the total input rating of all other equipment in the enclosure.

Figure 10. Equipment in Confined Space - All Air from Outside

Shipping Bolt Removal

Units with 1/2 hp and 3/4 hp blower motors are equipped with three flexible legs and one rigid leg. The rigid leg is equipped with a shipping bolt and a flat white plastic washer (rather than the rubber mounting grommet used with a flexible mounting leg). See Figure 11. The bolt and washer must be removed before the furnace is placed into operation. After the bolt and washer have been removed, the rigid leg will not touch the blower housing.

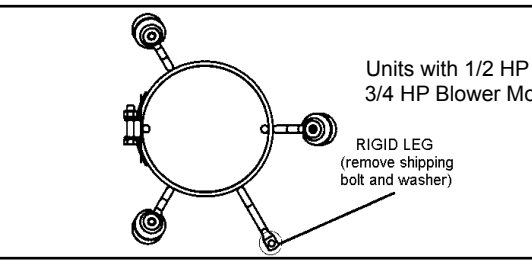

Figure 11.

Installation

Setting Equipment

⚠ WARNING

Do not connect the return air ducts to the back of the furnace. Doing so will adversely affect the operation of the safety control devices, which could result in personal injury or death.

⚠ WARNING

Blower access panel must be securely in place when blower and burners are operating. Gas fumes, which could contain carbon monoxide, can be drawn into living space resulting in personal injury or death.

Upflow Applications

The gas furnaces can be installed as shipped in the upflow position. Refer to Figure 13 for clearances. Select a location that allows for the required clearances that are listed on the unit nameplate. Also consider gas supply connections, electrical supply, vent connection, condensate trap and drain connections, and installation and service clearances [24 inches (610 mm) at unit front]. The unit must be level from side to side. Tilt the unit slightly (maximum 1/2 in. from level) from back to front to aid in the draining of the heat exchanger. See Figure 12.

Allow for clearances to combustible materials as indicated on the unit nameplate.

⚠ WARNING

Improper installation of the furnace can result in personal injury or death. Combustion and flue products must never be allowed to enter the return air system or air in the living space. Use sheet metal screws and joint tape to seal return air system to furnace.

In platform installations with furnace return, the furnace should be sealed airtight to the return air plenum. A door must never be used as a portion of the return air duct system. The base must provide a stable support and an airtight seal to the furnace. Allow absolutely no sagging, cracks, gaps, etc.

For no reason should return and supply air duct systems ever be connected to or from other heating devices such as a fireplace or stove, etc. Fire, explosion, carbon monoxide poisoning, personal injury and/or property damage could result.

Return Air Guidelines

Return air can be brought in through the bottom or either side of the furnace installed in an upflow application. If the furnace is installed on a platform with bottom return, make an airtight seal between the bottom of the furnace and the platform to ensure that the furnace operates properly and safely. The furnace is equipped with a removable bottom panel to facilitate installation.

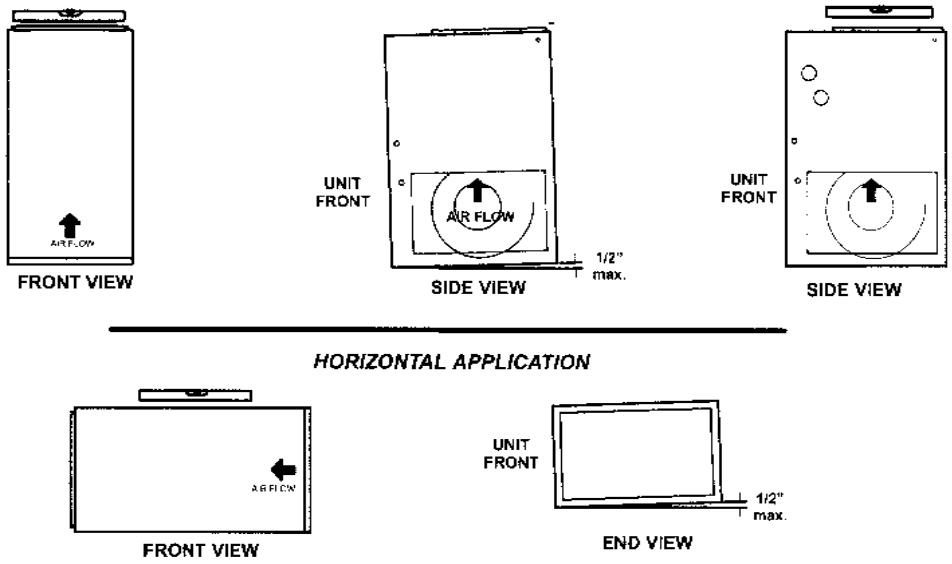

Tilt the unit slightly (Max. 1/2") from back to front to aid in the draining of the heat exchanger.

Unit must be level side-to-side in all applications.

Figure 12. Setting Equipment

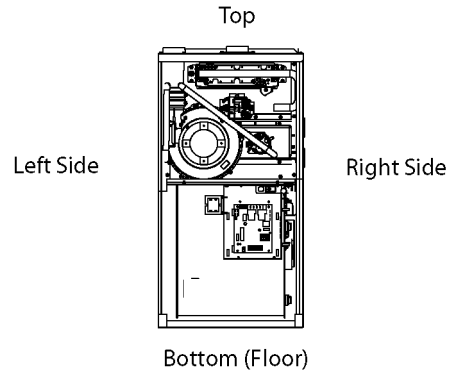

Top/Plenum	1 in. (25 mm)
*Front	0
Back	0
Sides	0†
Vent	0
Floor	0‡

* Front clearance in alcove installation must be 24 in. (610 mm). Maintain a minimum of 24 in. (610 mm) for front service access.

† Allow proper clearances to accommodate condensate trap.

‡ For installations on a combustible floor, do not install the furnace directly on carpeting, tile or other combustible materials other than wood flooring.

Figure 13. Upflow Applications Installation Clearances

Markings are provided on both sides of the furnace cabinet for installations that require side return air. Cut the furnace cabinet at the maximum dimensions shown on Page 2.

Furnace applications which include side return air and a condensate trap installed on the same side of the cabinet (trap can be installed remotely within 5 ft.) require either a return air base or field-fabricated transition to accommodate an optional IAQ accessory taller than 14.5”. See Figure 14.

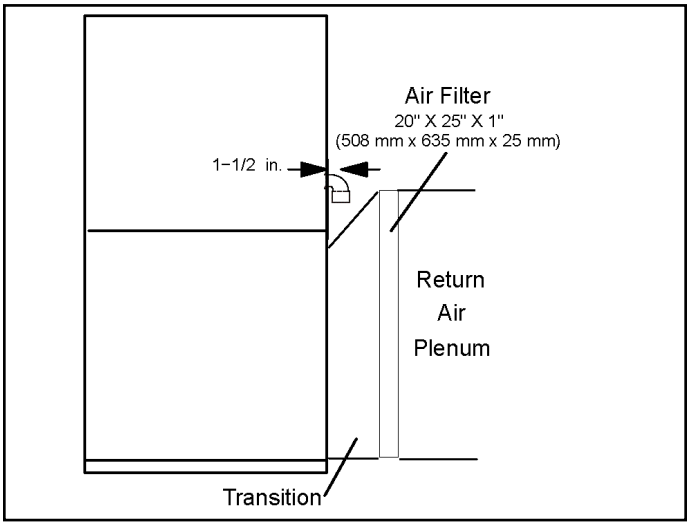

Figure 14. Side Return Air (with Transition and Filter)

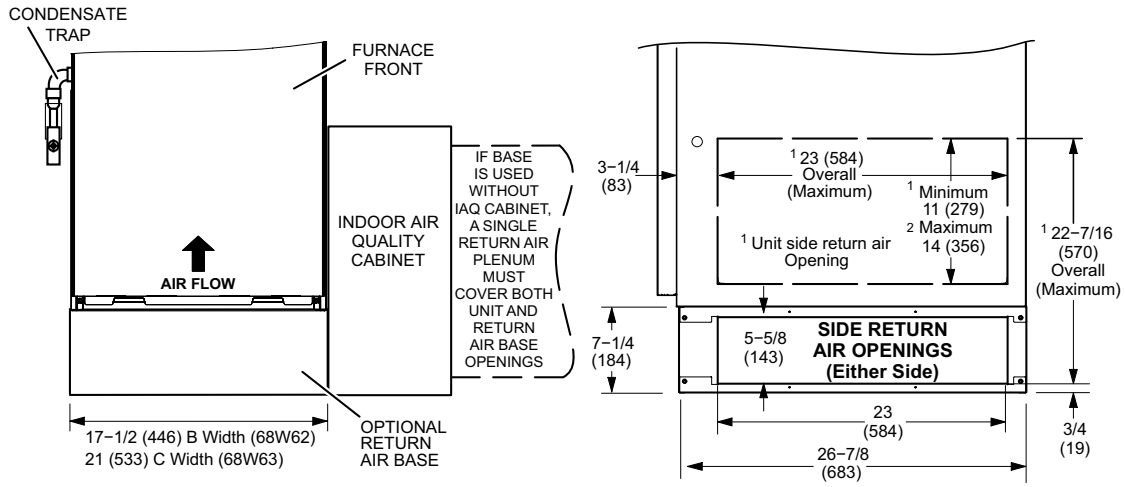

NOTE: Optional side return air filter kits are not for use with return air base.

[1] Both the unit return air opening and the base return air opening must be covered by a single plenum or IAQ cabinet.

Minimum unit side return air opening dimensions for units requiring 1800 cfm of air and over (W x H): 23 x 11 in. (584 x279 mm).

The opening can be cut as needed to accommodate plenum or IAQ cabinet while maintaining dimensions shown.

Side return air openings must be cut in the field. There are cutting guides stenciled on the cabinet for the side return air opening. The size of the opening must not extend beyond the markings on the furnace cabinet.

[2] To minimize pressure drop, the largest opening height possible (up to 14 inches) is preferred.

Figure 15. Optional Return Air Base (Upflow Applications Only)

Removing the Bottom Panel

Remove the two screws that secure the bottom cap to the furnace. Pivot the bottom cap down to release the bottom panel. Once the bottom panel has been removed, reinstall the bottom cap. See Figure 16.

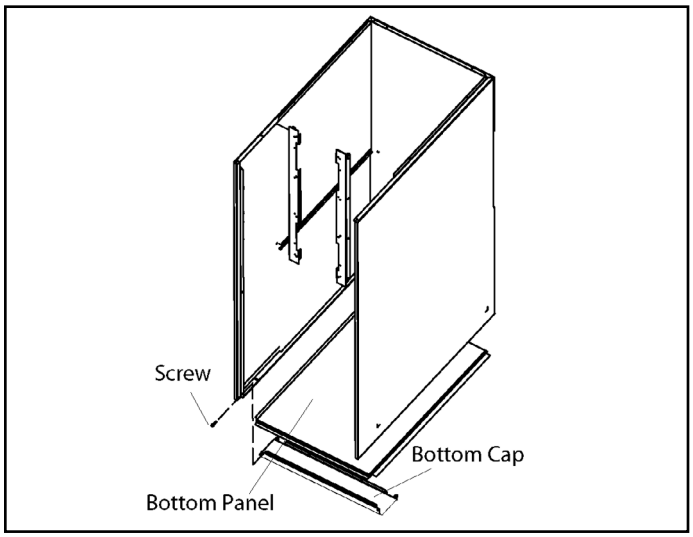

Figure 16. Removing the Bottom Panel

Horizontal Applications

⚠ WARNING

Do not install the furnace on its front or its back. See Figure 17.

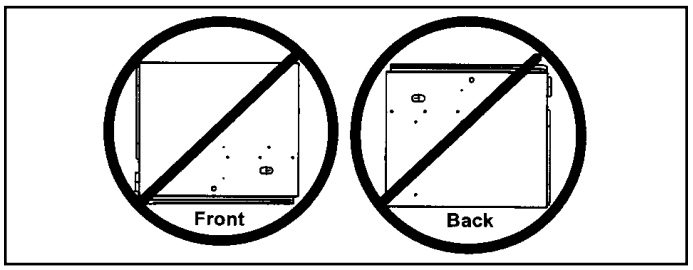

Figure 17.

This furnace can be installed in horizontal applications with either right or left hand air discharge.

Refer to Figure 18 for clearances in horizontal applications.

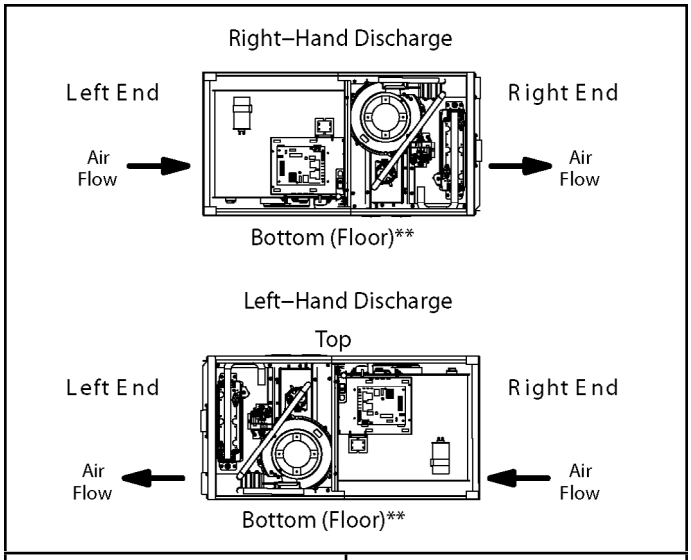

Top/Plenum	1 in. (25 mm)
*Front	0
Back	0
Sides	0†
Vent	0
Floor	0‡

* Front clearance in alcove installation must be 24 in. (610 mm). Maintain a minimum of 24 in. (610 mm) for front service access.

† Allow proper clearances to accommodate condensate trap.

‡ For installations on a combustible floor, do not install the furnace directly on carpeting, tile or other combustible materials other than wood flooring.

Figure 18. Horizontal Application Installation Clearances

Suspended Installation of Horizontal Unit

This furnace may be installed in either an attic or a crawl space. Either suspend the furnace from roof rafters or floor joists, as shown in Figure 19, or install the furnace on a platform, as shown in Figure 20. A horizontal suspension kit (51W10) may be ordered from your distributor or use equivalent.

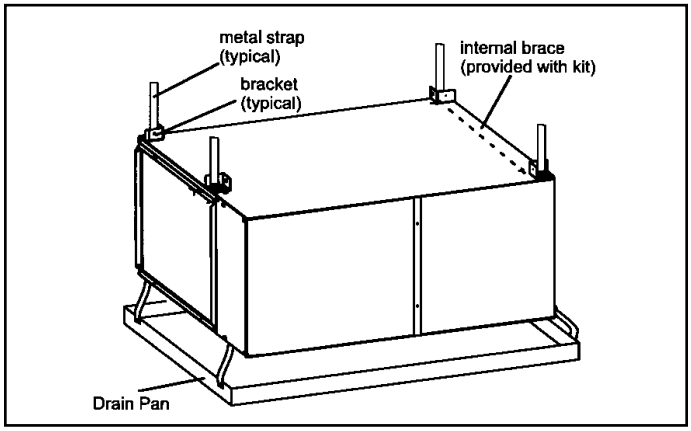

Figure 19. Typical Horizontal Application

NOTE: *Heavy-gauge sheet metal straps may be used to suspend the unit from roof rafters or ceiling joists. When straps are used to suspend the unit in this way, support must be provided for both the ends. The straps must not interfere with the plenum or exhaust piping installation.*

Cooling coils and supply and return air plenums must be supported separately.

NOTE: *When the furnace is installed on a platform or with the horizontal suspension kit in a crawl space, it must be elevated enough to avoid water damage, accommodate drain trap and to allow the evaporator coil to drain.*

Platform Installation of Horizontal Unit

1. Select location for unit keeping in mind service and other necessary clearances. See Figure 18.
2. Construct a raised wooden frame and cover frame with a plywood sheet. If unit is installed above finished space, fabricate an auxiliary drain pan to be installed under unit. Set unit in drain pan as shown in Figure 20. Leave 8 inches for service clearance below unit for condensate trap.
3. Provide a service platform in front of unit. When installing the unit in a crawl space, a proper support platform may be created using cement blocks.
4. Route auxiliary drain line so that water draining from this outlet will be easily noticed by the homeowner.
5. If necessary, run the condensate line into a condensate pump to meet drain line slope requirements. The pump must be rated for use with condensing furnaces. Protect the condensate discharge line from the pump to the outside to avoid freezing.
6. Continue with exhaust, condensate and intake piping installation according to instructions.

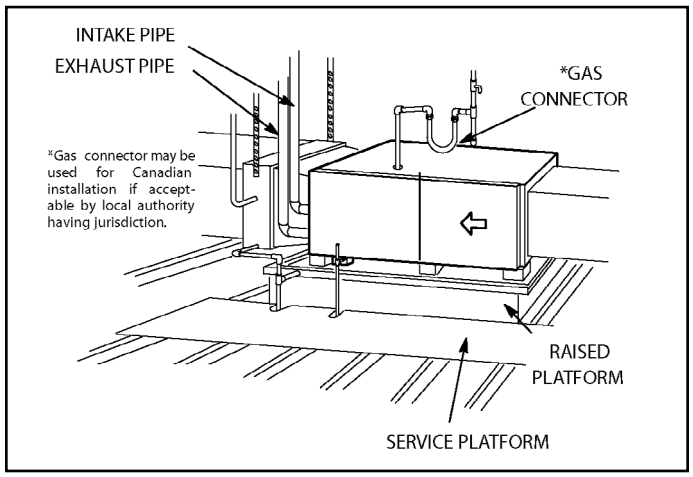

Figure 20.

Return Air - Horizontal Applications

Return air may be brought in only through the end of a furnace installed in the horizontal position. The furnace is equipped with a removable bottom panel to facilitate installation. See Figure 16.

Filters

This unit is not equipped with a filter or rack. A field provided filter is required for the unit to operate properly. Table 1 list recommended filter sizes.

A filter must be in place whenever the is operating.

Furnace Cabinet Width	Filter Size	
	Side Return	Bottom Return
17-1/2”	16 x 25 x 1 (1)	16 x 25 x 1 (1)
21”		20 x 25 x 1 (1)

Table 1.

Duct System

Use industry approved standards to size and install the supply and return air duct system. This will result in a quiet and low-static system that has uniform air distribution.

NOTE: *This furnace is not certified for operation in heating mode (indoor blower operating at selected heating speed) with an external static pressure which exceeds 0.5 inches w.c. Operation at these conditions may result in improper limit operation.*

Supply Air Plenum

If the furnace is installed without a cooling coil, a removable access panel should be installed in the supply air duct. The access panel should be large enough to permit inspection (by reflected light) of the heat exchanger for leaks after the furnace is installed. The furnace access panel must always be in place when the furnace is operating and it must not allow leaks into the supply air duct system.

Return Air Plenum

NOTE: *Return air must not be drawn from a room where this furnace, or any other gas fueled appliance (i.e., water heater), or carbon monoxide producing device (i.e., wood fireplace) is installed.*

When return air is drawn from a room, a negative pressure is created in the room. If a gas appliance is operating in a room with negative pressure, the flue products can be pulled back down the vent pipe and into the room. This reverse flow of the flue gas may result in incomplete combustion and the formation of carbon monoxide gas. This raw gas or toxic fumes might then be distributed throughout the house by the furnace duct system.

Return air can be brought in through the bottom or either side of the furnace. If a furnace with bottom return air is installed on a platform, make an airtight seal between the bottom of the furnace and the platform to ensure that the

unit operates properly and safely. Use fiberglass sealing strips, caulking, or equivalent sealing method between the plenum and the furnace cabinet to ensure a tight seal. If a filter is installed, size the return air duct to fit the filter frame.

Pipe & Fittings Specifications

All pipe, fittings, primer and solvent cement must conform with American National Standard Institute and the American Society for Testing and Materials (ANSI/ASTM) standards. The solvent shall be free flowing and contain no lumps, undissolved particles or any foreign matter that adversely affects the joint strength or chemical resistance of the cement. The cement shall show no gelation, stratification, or separation that cannot be removed by stirring. Refer to Table 2 for approved piping and fitting materials.

⚠ CAUTION

Solvent cements for plastic pipe are flammable liquids and should be kept away from all sources of ignition. Do not use excessive amounts of solvent cement when making joints. Good ventilation should be maintained to reduce fire hazard and to minimize breathing of solvent vapors. Avoid contact of cement with skin and eyes.

⚠ IMPORTANT

A93UH1E & 92G1UHE exhaust and intake connections are made of PVC. Use PVC primer and solvent cement when using PVC vent pipe. When using ABS vent pipe, use transitional solvent cement to make connections to the PVC fitting in the unit.

Use PVC primer and solvent cement or ABS solvent cement meeting ASTM specifications, refer to Table 2. As an alternate, use all purpose cement, to bond ABS, PVC, or CPVC pipe when using fittings and pipe made of the same materials. Use transition solvent cement when bonding ABS to either PVC or CPVC.

Low temperature solvent cement is recommended during cooler weather. Metal or plastic strapping may be used for vent pipe hangers. Uniformly apply a liberal coat of PVC primer for PVC or use a clean dry cloth for ABS to clean inside socket surface of fitting and male end of pipe to depth of fitting socket.

Canadian Applications Only

Pipe, fittings, primer and solvent cement used to vent (exhaust) this appliance must be certified to ULC S636 and supplied by a single manufacturer as part of an approved vent (exhaust) system. When bonding the vent system to the furnace, use ULC S636 approved One-Step Transition Cement to bond the pipe to the flue collar, or to bond the 90° elbow or reducing 90° elbow to the flue collar. In addition, the first three feet of vent pipe from the furnace flue collar must be accessible for inspection.

Piping and Fittings Specifications	
Schedule 40 PVC (Pipe)	D1785
Schedule 40 PVC (Cellular Core Pipe)	F891
Schedule 40 PVC (Fittings)	D2466
Schedule 40 CPVC (Pipe)	F441
Schedule 40 CPVC (Fittings)	F438
SDR-21 PVC or SDR-26 PVC (Pipe)	D2241
SDR-21 CPVC or SDR-26 CPVC (Pipe)	F442
Schedule 40 ABS Cellular Core DWV (Pipe)	F628
Schedule 40 ABS (Pipe)	D1527
Schedule 40 ABS (Fittings)	D2468
ABS-DWV (Drain Waste & Vent) (Pipe & Fittings)	D2661
PVC-DWV (Drain Waste & Vent) (Pipe & Fittings)	D2665
Primer & Solvent Cement	**ASTM SPECIFICATION**
PVC & CPVC Primer	F656
PVC Solvent Cement	D2564
CPVC Solvent Cement	F493
ABS Solvent Cement	D2235
PVC/CPVC/ABS All Purpose Cement For Fittings & Pipe of the same material	D2564, D2235, F493
ABS to PVC or CPVC Transition Solvent Cement	D3138
Canada Pipe & Fitting & Solvent Cement	**MARKING**
PVC & CPVC Pipe and Fittings	ULCS636
PVC & CPVC Solvent Cement	
ABS to PVC or CPVC Transition Cement	
Polypropylene Venting System	ULC-S636
PolyPro® by Duravent	
InnoFlue® by Centrotherm	ULC-S636
ECCO Polypropylene Vent™	ULC-S636

Table 2.

Joint Cementing Procedure

All cementing of joints should be done according to the specifications outlined in ASTM D 2855.

NOTE: *A sheet metal screw may be used to secure the intake pipe to the connector, if desired. Use a drill or self tapping screw to make a pilot hole.*

Capacity	VENT PIPE DIA. (in.)	STANDARD			CONCENTRIC		
		Outdoor Exhaust Accelerator (Dia. X Length)	Outdoor Exhaust Accelerator (Dia. X Length)	Flush Mount Kit	1-1/2" Concentric Kit	2" Concentric Kit	3" Concentric Kit
		1-1/2" X 12"	2" X 12"	51W11 **	71M80 or +44W92++	69M29 or +44W92++	60L46 or 44W93+
030	1-1/2	YES		YES	YES		
	2	YES		YES	YES		
	2-1/2	YES		YES	YES		
	3	YES		YES	YES		
045	1-1/2	YES		YES	YES		
	2	YES		YES	YES		
	2-1/2	YES		YES	YES		
	3	YES		YES	YES		
070	1-1/2	YES		YES	YES		
	2	YES		YES	YES		
	2-1/2	YES		YES	YES		
	3	YES		YES	YES		
090	2			YES		YES	YES
	2-1/2		YES	YES		YES	YES
	3		YES	YES		YES	YES
110	2			YES		YES	YES
	2-1/2		YES	YES		YES	YES
	3		YES	YES		YES	YES

** Kit 51W11 is provided with a 1-1/2" accelerator which must be for all 2 and 2-1/2" PVC installations.

+ Termination kits 44W92 and 44W93 are approved for use in Canadian installations to meet CSAB149.

++ The 44W92 Concentric kit is provided with a 1-1/2" accelerator, which must be installed on the exhaust outlet when this kit is used with this furnace.

NOTE: When using 1-1/2" piping and terminating with a flush mount kit or concentric kit, the pipe must be transitioned to 2" pipe before attaching to the flush mount kit or the concentric kit.

Table 3. Outdoor Termination Kits Usage

⚠ DANGER

DANGER OF EXPLOSION!

Fumes from PVC glue may ignite during system check. Allow fumes to dissipate for at least 5 minutes before placing unit into operation.

1. Measure and cut vent pipe to desired length.
2. Debur and chamfer end of pipe, removing any ridges or rough edges. If end is not chamfered, edge of pipe may remove cement from fitting socket and result in a leaking joint.
3. Clean and dry surfaces to be joined.
4. Test fit joint and mark depth of fitting on outside of pipe.
5. Uniformly apply a liberal coat of PVC primer for PVC or use a clean dry cloth for ABS to clean inside socket surface of fitting and male end of pipe to depth of fitting socket.

   NOTE: *Time is critical at this stage. Do not allow primer to dry before applying cement.*

6. Promptly apply solvent cement to end of pipe and inside socket surface of fitting. Cement should be applied lightly but uniformly to inside of socket. Take care to keep excess cement out of socket. Apply second coat to end of pipe.
7. Immediately after applying last coat of cement to pipe, and while both inside socket surface and end of pipe are wet with cement, forcefully insert end of pipe into socket until it bottoms out. Turn PVC pipe 1/4 turn

during assembly (but not after pipe is fully inserted) to distribute cement evenly. Do not turn ABS or cellular core pipe.

NOTE: *Assembly should be completed within 20 seconds after last application of cement. Hammer blows should not be used when inserting pipe.*

8. After assembly, wipe excess cement from pipe at end of fitting socket. A properly made joint will show a bead around its entire perimeter. Any gaps may indicate an improper defective assembly due to insufficient solvent.
9. Handle joints carefully until completely set.

Venting Practices

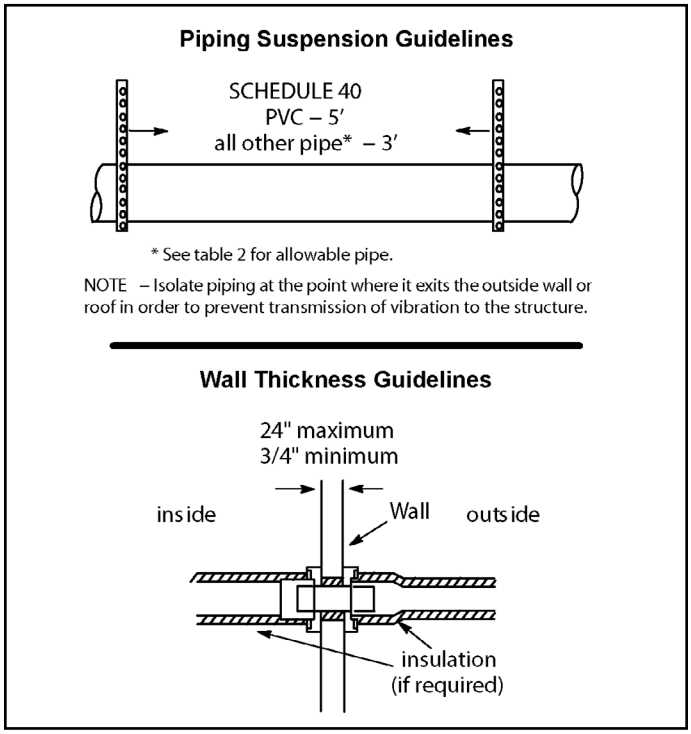

Figure 21.

⚠ WARNING

CARBON MONOXIDE POISONING HAZARD

Failure to follow the steps outlined below for each appliance connected to the venting system being placed into operation could result in carbon monoxide poisoning or death.

The following steps shall be followed for each appliance connected to the venting system being placed into operation, while all other appliances connected to the venting system are not in operation.

Removal of the Furnace from Common Vent

In the event that an existing furnace is removed from a venting system commonly run with separate gas appliances, the venting system is likely to be too large to properly vent the remaining attached appliances.

Conduct the following test while each appliance is operating and the other appliances (which are not operating) remain connected to the common venting system. If the venting system has been installed improperly, you must correct the system as indicated in the general venting requirements section.

1. Seal any unused openings in the common venting system.
2. Inspect the venting system for proper size and horizontal pitch. Determine that there is no blockage, restriction, leakage, corrosion, or other deficiencies which could cause an unsafe condition.
3. Close all building doors and windows and all doors between the space in which the appliances remaining connected to the common venting system are located and other spaces of the building. Turn ON clothes dryers and any appliances not connected to the common venting system. Turn ON any exhaust fans, such as range hoods and bathroom exhausts, so they will operate at maximum speed. Do not operate a summer exhaust fan. Close fireplace dampers.
4. Follow the lighting instructions. Turn ON the appliance that is being inspected. Adjust the thermostat so that the appliance operates continuously.
5. After the main burner has operated for 5 minutes, test for leaks of flue gases at the draft hood relief opening. Use the flame of a match or candle.

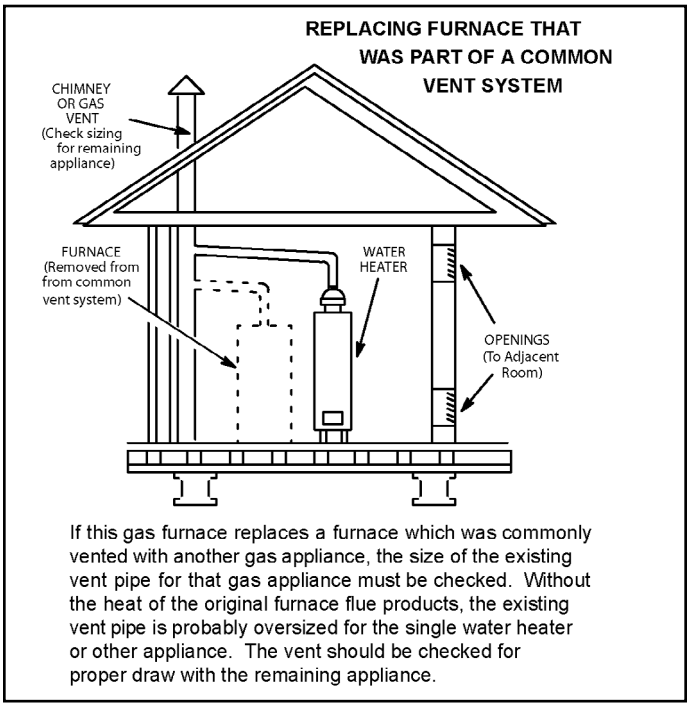

Figure 22.

6. After determining that each appliance connected to the common venting system is venting properly, (step 3) return all doors, windows, exhaust fans, fireplace dampers, and any other gas burning appliances to their previous mode of operation.
7. If a venting problem is found during any of the preceding tests, the common venting system must be modified to correct the problems.

Resize the common venting system to the minimum vent pipe size determined by using the appropriate tables in Appendix G. (These are in the current standards of the National Fuel Gas Code ANSI Z223.1.

Exhaust Piping

See Figure 25 and Figure 26

1. In areas where piping penetrates joist or interior walls, hole must be large enough to allow clearance on all sides of pipe through center of hole using a hanger.
2. When furnace is installed in a residence where unit is shut down for an extended period of time, such as a vacation home, make provisions for draining condensate collection from trap and lines.
3. Route piping to outside of structure. Continue with installation following instructions given in piping termination section.

⚠ CAUTION

Do not discharge exhaust into an existing stack or stack that also serves another gas appliance. If vertical discharge through an existing unused stack is required, insert PVC pipe inside the stack until the end is even with the top or outlet end of the metal stack.

⚠ CAUTION

The exhaust vent pipe operates under positive pressure and must be completely sealed to prevent leakage of combustion products into the living space.

Vent Piping Guidelines

This gas furnace can be installed as either a Non-Direct Vent or a Direct Vent gas central furnace.

NOTE: *In non-Direct Vent installations, combustion air is taken from indoors and flue gases are discharged outdoors. In Direct Vent installations, combustion air is taken from outdoors and flue gases are discharged outdoors.*

Intake and exhaust pipe sizing - Size pipe according to Table 4 and Table 5 through Table 6. Table 4 lists the minimum vent pipe lengths permitted. Table 5 and Table 6 list the maximum pipe lengths permitted for A93UH1E & 92G1UHE.

Regardless of the diameter of pipe used, the standard roof and wall terminations described in section Exhaust Piping Terminations should be used. Exhaust vent termination pipe is sized to optimize the velocity of the exhaust gas as it exits the termination. Refer to Table 8.

In some applications which permit the use of several different sizes of vent pipe, a combination vent pipe may be used. Contact Allied Air Technical Service for assistance in sizing vent pipe in these applications.

Exhaust Pipe

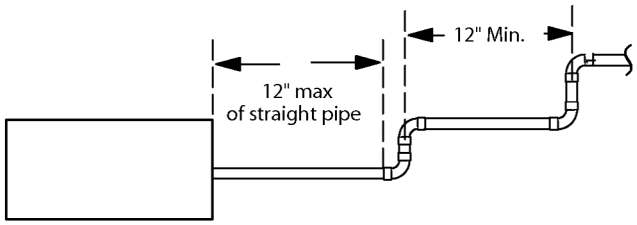

Horizontal Application

NOTE – All horizontal runs of exhaust pipe must slope back toward unit. A minimum of 1/4" (6 mm) drop for each 12" (305 mm) of horizontal run is mandatory for drainage.

NOTE – Exhaust pipe MUST be glued to furnace exhaust fittings.

NOTE – Exhaust piping should be checked carefully to make sure there are no sags or low spots.

Figure 23.

NOTE: *It is acceptable to use any pipe size which fits within the guidelines allowed in Table 5 and Table 6.*

NOTE: *The exhaust collar on all models is sized to accommodate 2" Schedule 40 vent pipe. In horizontal applications, transition to exhaust pipe larger than 2" must be made in vertical runs of the pipe. A 2" elbow must be added before the pipe is transitioned to any size larger than 2". This elbow must be added to the elbow count used to determine acceptable vent lengths. Contact the Application Department for more information concerning sizing of vent systems which include multiple pipe sizes.*

Capacity	Min. Vent Length*
030, 045, 070, 090, 110	15 ft. or 5 ft plus 2 elbows or 10 ft plus 1 elbow

* Any approved termination may be added to the minimum length listed.

** This gas furnace must have 3" to 2" reducing elbow (supplied or field replacement Canadian kit) installed directly into unit flue collar.

Table 4. Minimum Vent Pipe Lengths

⚠ IMPORTANT

Do not use screens or perforated metal in exhaust or intake terminations. Doing so will cause freeze-ups and may block the terminations.

Use Figure 24 to correctly size vent pipe diameter.

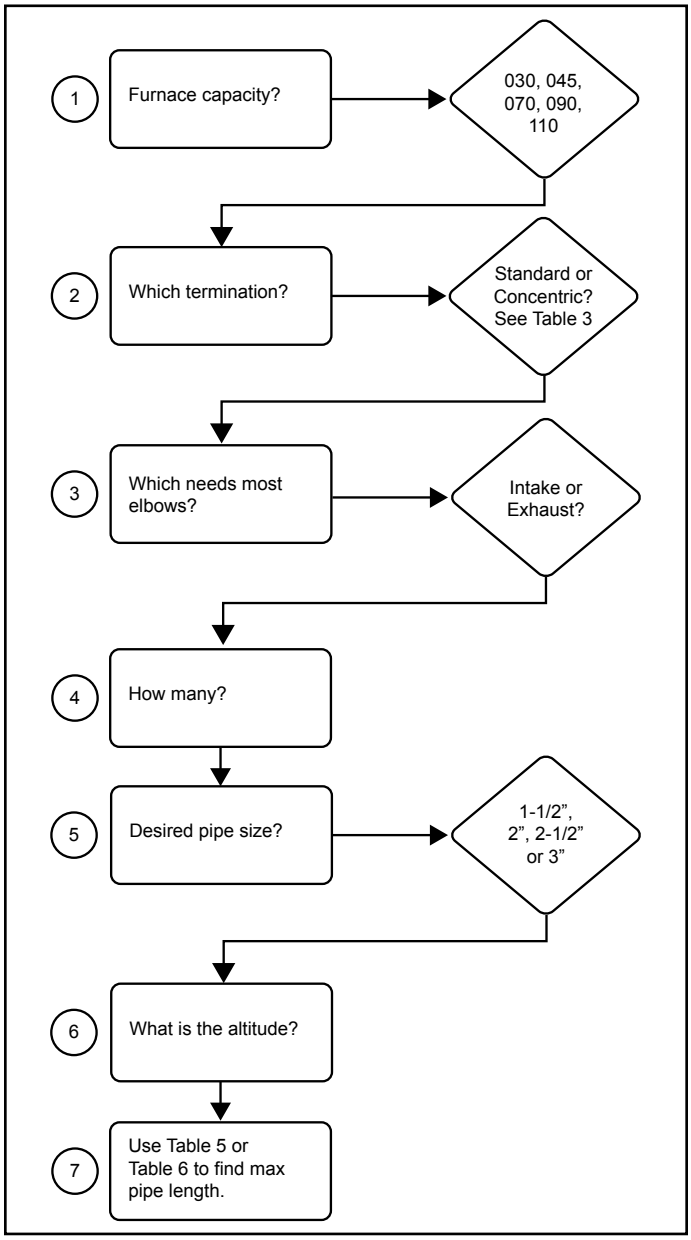

Figure 24.

A93UH1E & 92G1UHE Maximum Allowable Intake or Exhaust Vent Length in Feet

Standard Termination at Elevation 0 - 10,000 ft																
Number of 90° Elbows Used	1-1/2" Pipe				2" Pipe				2-1/2" Pipe				3" Pipe			
	Capacity				Capacity				Capacity				Capacity			
	030 / 045	070	090	110	030 / 045	070	090	110	030 / 045	070	090	110	030 / 045	070	090	110
1	25	20	n/a	n/a	76	61	39	19	110	95	63	38	132	132	113	113
2	20	15			71	56	34	14	105	90	58	33	127	127	108	108
3	15	10			66	51	29	9	100	85	53	28	122	122	103	103
4	10	n/a			61	46	24	n/a	95	80	48	23	117	117	98	98
5	n/a				56	41	19		90	75	43	18	112	112	93	93
6					51	36	14		85	70	38	13	107	107	88	88
7					46	31	9		80	65	33	8	102	102	83	83
8					41	26	n/a		75	60	28	n/a	97	97	78	78
9					36	21			70	55	23		92	92	73	73
10					31	16			65	50	18		87	87	68	68
Concentric Termination Elevation 0 - 10,000 ft																
Number of 90° Elbows Used	1-1/2" Pipe				2" Pipe				2-1/2" Pipe				3" Pipe			
	Capacity				Capacity				Capacity				Capacity			
	030 / 045	070	090	110	030 / 045	070	090	110	030 / 045	070	090	110	030 / 045	070	090	110
1	20	15	n/a	n/a	68	53	37	17	100	85	59	34	116	116	109	109
2	15	10			63	48	32	12	95	80	54	29	111	111	104	104
3	10	n/a			58	43	27	7	90	75	49	24	106	106	99	99
4	n/a				53	38	22	n/a	85	70	44	19	101	101	94	94
5					48	33	17		80	65	39	14	96	96	89	89
6					43	28	12		75	60	34	9	91	91	84	84
7					38	23	7		70	55	29	n/a	86	86	79	79
8					33	18	n/a		65	50	24		81	81	74	74
9					28	13			60	45	19		76	76	69	69
10					23	8			55	40	14		71	71	64	64

**Size intake and exhaust pipe length separately. Values in table are for Intake OR Exhaust, not combined total. Both Intake and Exhaust must be same pipe size.*

Table 5.

A93UH1E & 92G1UHE Maximum Allowable Exhaust Vent Length with Furnace Installed in a Closet or Basement Using Ventilated Attic or Crawl Space for Intake in Feet

Standard Termination at Elevation 0 - 10,000 ft																
Number of 90° Elbows Used	1-1/2" Pipe				2" Pipe				2-1/2" Pipe				3" Pipe			
	Capacity				Capacity				Capacity				Capacity			
	030 / 045	070	090	110	030 / 045	070	090	110	030 / 045	070	090	110	030 / 045	070	090	110
1	20	15	n/a	n/a	66	51	29	9	95	80	48	23	112	112	93	93
2	15	10			61	46	24	4	90	75	43	18	107	107	88	88
3	10	n/a			56	41	19	n/a	85	70	38	13	102	102	83	83
4	n/a				51	36	14		80	65	33	8	97	97	78	78
5					46	31	9		75	60	28	3	92	92	73	73
6					41	26	4		70	55	23	n/a	87	87	68	68
7					36	21	n/a		65	50	18		82	82	63	63
8					31	16			60	45	13		77	77	58	58
9					26	11			55	40	8		72	72	53	53

NOTE: *Additional vent pipe and elbows used to terminate the vent pipe outside the structure must be included in the total vent length calculation.*

Table 6.

TYPICAL EXHAUST PIPE CONNECTIONS IN UPFLOW DIRECT OR NON-DIRECT VENT APPLICATIONS

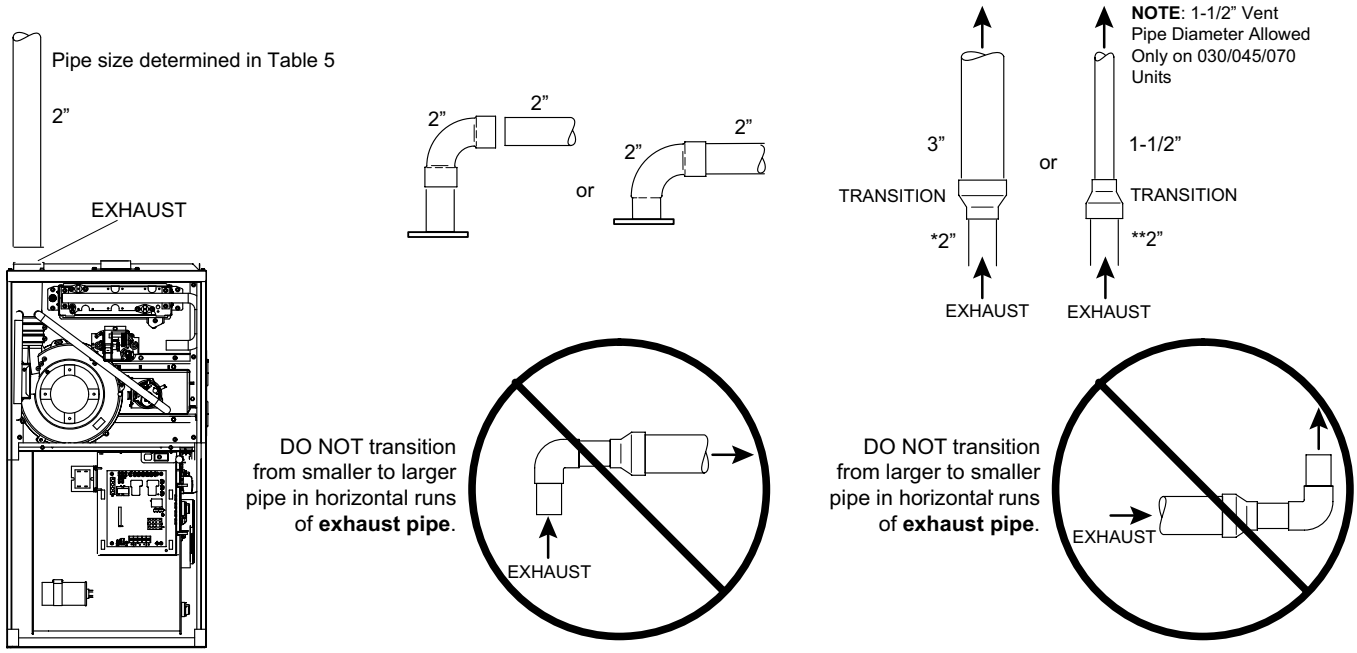

* When transitioning up in pipe size, use the shortest length of 2” PVC pipe possible.
** When transitioning down in pipe size, use at least 1 foot of 2" PVC pipe.
NOTE: Exhaust pipe and intake pipe must be the same diameter.

Figure 25.

TYPICAL EXHAUST PIPE CONNECTIONS IN HORIZONTAL DIRECT OR NON-DIRECT VENT APPLICATIONS (RIGHT-HAND DISCHARGE SHOWN)

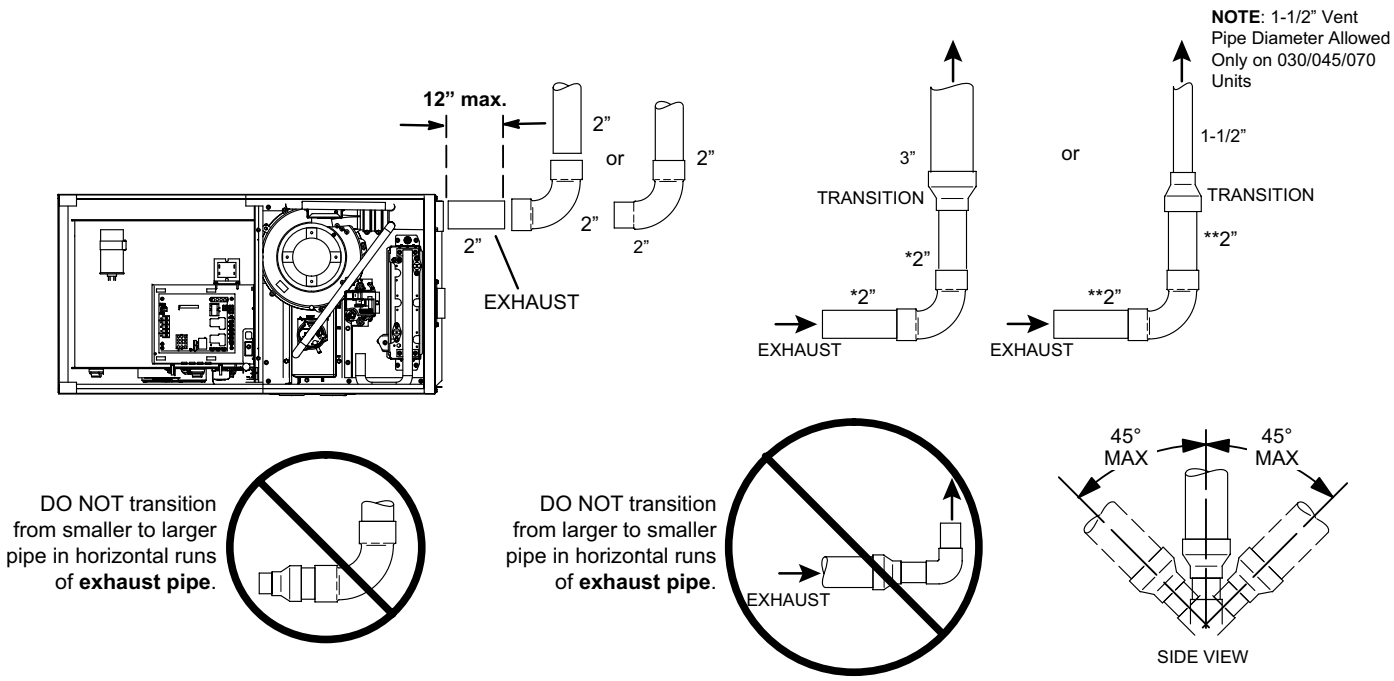

* When transitioning up in pipe size, use the shortest length of 2" PVC pipe possible.
** When transitioning down in pipe size, use at least 1 foot of 2" PVC pipe.
NOTE: Exhaust pipe and intake pipe must be the same diameter.

Figure 26.

TYPICAL INTAKE PIPE CONNECTIONS IN UPFLOW DIRECT OR NON-DIRECT VENT APPLICATIONS

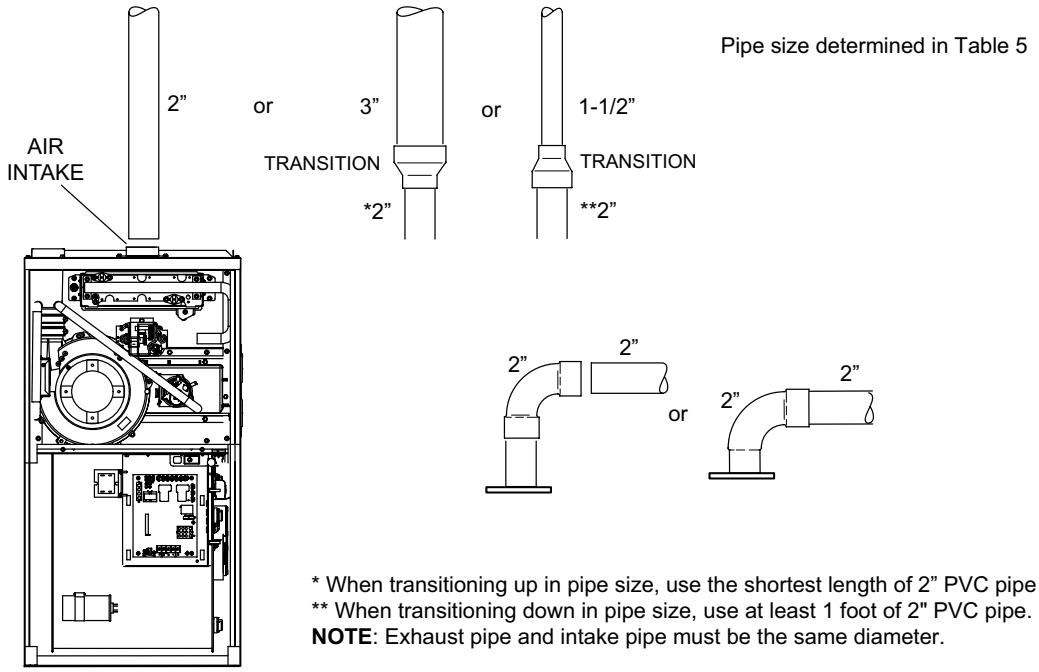

* When transitioning up in pipe size, use the shortest length of 2" PVC pipe possible.
** When transitioning down in pipe size, use at least 1 foot of 2" PVC pipe.
NOTE: Exhaust pipe and intake pipe must be the same diameter.

Figure 27.

TYPICAL INTAKE PIPE CONNECTIONS IN HORIZONTAL DIRECT OR NON-DIRECT VENT APPLICATION (RIGHT-HAND DISCHARGE SHOWN)

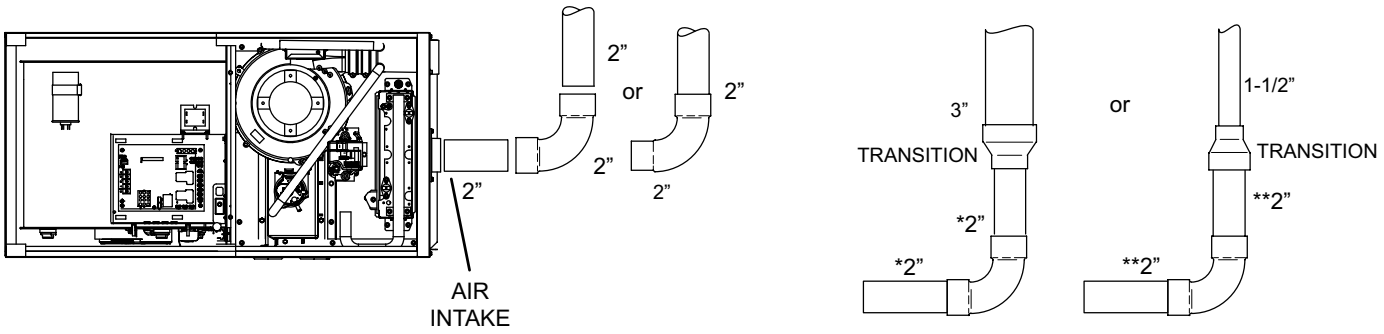

* When transitioning up in pipe size, use the shortest length of 2” PVC pipe possible.
** When transitioning down in pipe size, use at least 1 foot of 2" PVC pipe.
NOTE: Exhaust pipe and intake pipe must be the same diameter.

Figure 28.

Intake Piping

See Figure 27 through Figure 30

This gas furnace may be installed in either direct vent or non-direct vent applications. In non-direct vent applications, when intake air will be drawn into the furnace from the surrounding space, the indoor air quality must be considered and guidelines listed in Combustion, Dilution and Ventilation Air section must be followed.

Follow the next two steps when installing the unit in Direct Vent applications, where combustion air is taken from outdoors and flue gases are discharged outdoors. The provided air intake screen must not be used in direct vent applications (outdoors).

1. Use transition solvent cement or a sheet metal screw to secure the intake pipe to the inlet air connector.
2. Route piping to outside of structure. Continue with installation following instructions given in general guide lines for piping terminations and in intake and exhaust piping terminations for direct vent sections. Refer to Table 5 and Table 6.

TYPICAL AIR INTAKE PIPE CONNECTIONS
UPFLOW NON–DIRECT
VENT APPLICATIONS

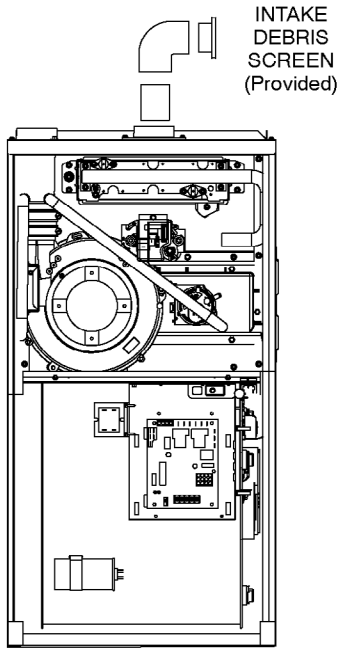

NOTE – Debris screen and elbow may be rotated, so that screen may be positioned to face forward or to either side.

Figure 29.

⚠ CAUTION

If this unit is being installed in an application with combustion air coming in from a space serviced by an exhaust fan, power exhaust fan, or other device which may create a negative pressure in the space, take care when sizing the inlet air opening. The inlet air opening must be sized to accommodate the maximum volume of exhausted air as well as the maximum volume of combustion air required for all gas appliances serviced by this space.

Follow the next two steps when installing the unit in Non–Direct Vent applications where combustion air is taken from indoors and flue gases are discharged outdoors.

1. Use field-provided materials and the factory-provided air intake screen to route the intake piping as shown in Figure 29 or Figure 30. Maintain a minimum clearance of 3” (76 mm) around the air intake opening. The air intake opening (with the protective screen) should always be directed forward or to either side in the upflow position, and either straight out or downward in the horizontal position.

TYPICAL AIR INTAKE PIPE CONNECTIONS
HORIZONTAL NON–DIRECT VENT APPLICATIONS
(Horizontal Right–Hand Air Discharge Application Shown)

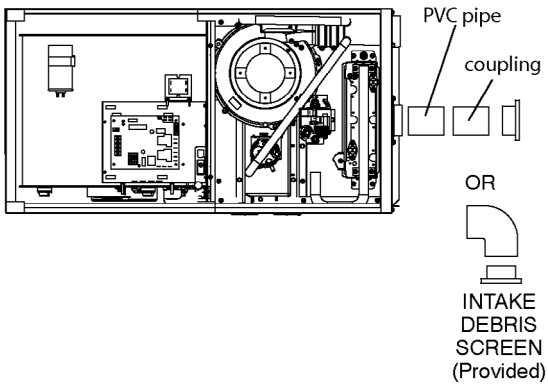

NOTE – Debris screen may be positioned straight out (preferred) or with an elbow rotated to face down.

Figure 30.

The air intake piping must not terminate too close to the flooring or a platform. Ensure that the intake air inlet will not be obstructed by loose insulation or other items that may clog the debris screen.

2. If intake air is drawn from a ventilated attic (Figure 31) or ventilated crawlspace (Figure 32) the exhaust vent length must not exceed those listed in Table 6. If 3” diameter pipe is used, reduce to 2” diameter pipe at the termination point to accommodate the debris screen.
3. Use a sheet metal screw to secure the intake pipe to the connector, if desired.

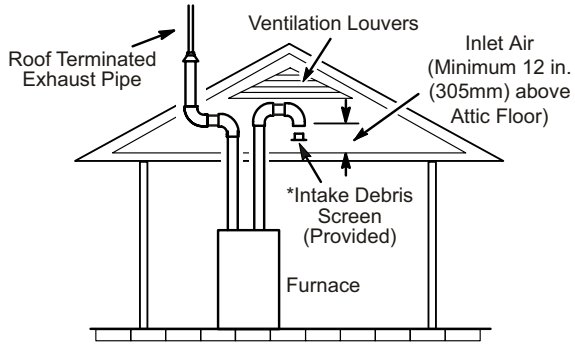

* See Maximum Vent Lengths table

NOTE: The inlet and outlet air openings shall each have a free area of at least one square inch per 4,000 Btu (645 mm^2 per 1.17 kW) per hour of the total input rating of all equipment in the enclosure.

Figure 31. Equipment in Confined Space (Inlet Air from Ventilated Attic & Outlet Air to Outside)

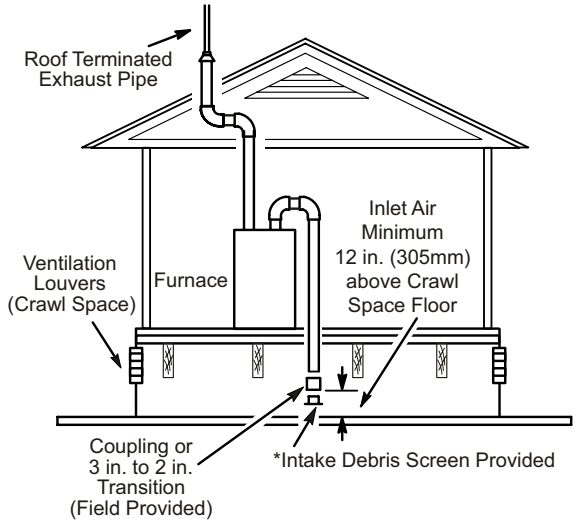

* See Maximum Vent Lengths table

NOTE: The inlet and outlet air openings shall each have a free area of at least one square inch per 4,000 Btu (645 mm^2 per 1.17 kW) per hour of the total input rating of all equipment in the enclosure.

Figure 32. Equipment in Confined Space (Inlet Air from Ventilated Crawl Space & Outlet Air to Outside)

General Guidelines for Vent Terminations

In Non–Direct Vent applications, combustion air is taken from indoors and the flue gases are discharged to the outdoors. This furnace is then classified as a non–direct vent, Category IV gas furnace.

In Direct Vent applications, combustion air is taken from outdoors and the flue gases are discharged to the outdoors. This furnace is then classified as a direct vent, Category IV gas furnace.

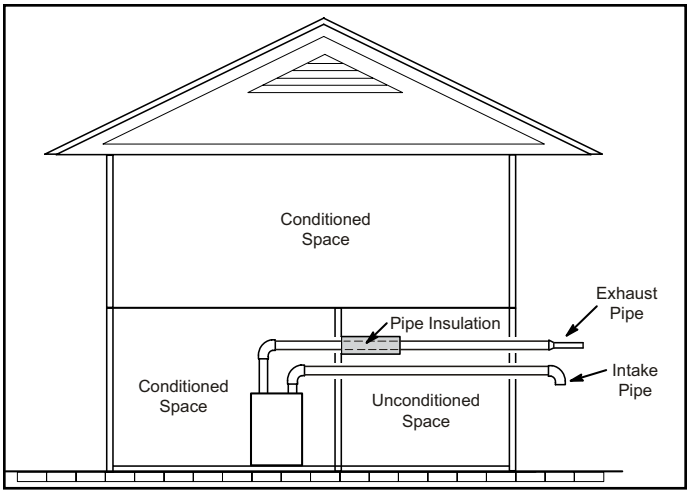

Figure 33. Insulating Exhaust Pipe in an Unconditioned Space

Maximum Allowable Exhaust Vent Pipe Length (in ft.) without Insulation in Unconditioned Space for Winter Design Temperatures Single - Stage High Efficiency Furnace

Winter Design Temperatures[1] ºF (ºC)	Vent Pipe Diameter	Unit Input Size									
		030		045		070		090		110	
		PVC	[2]PP	PVC	[2]PP	PVC	[2]PP	PVC	[2]PP	PVC	[2]PP
32° to 21° (0 to -6)	1-1/2 in.	N/A	N/A	25	N/A	25	N/A	N/A	N/A	N/A	N/A
	2 in.	N/A	N/A	18	16	31	28	50	48	30	30
	2-1/2 in.	N/A	N/A	13	N/A	24	N/A	42	N/A	56	N/A
	3 in.	N/A	N/A	9	9	18	18	35	35	47	47
20° to 1° (-7 to -17)	1-1/2 in.	N/A	N/A	15	N/A	20	N/A	N/A	N/A	N/A	N/A
	2 in.	N/A	N/A	9	8	18	16	32	29	30	30
	2-1/2 in.	N/A	N/A	5	N/A	13	N/A	24	N/A	34	N/A
	3 in.	N/A	N/A	N/A	N/A	8	8	19	19	26	26
0° to -20° (-18 to -29)	1-1/2 in.	N/A	N/A	10	N/A	15	N/A	N/A	N/A	N/A	N/A
	2 in.	N/A	N/A	5	3	12	10	22	19	30	27
	2-1/2 in.	N/A	N/A	N/A	N/A	7	N/A	15	N/A	22	N/A
	3 in.	N/A	N/A	N/A	N/A	N/A	N/A	10	10	16	16

[1] Refer to 99% Minimum Design Temperature table provided in the current edition of the ASHRAE Fundamentals Handbook.

[2] Poly-Propylene vent pipe (PP) by Duravent and Centrotherm

NOTE - Concentric terminations are the equivalent of 5' and should be considered when measuring pipe length.

NOTE- Maximum uninsulated vent lengths listed may include the termination (vent pipe exterior to the structure) and cannot exceed 5 linear feet or the maximum allowable intake or exhaust vent length listed in Table 5 and Table 6.

NOTE - If insulation is required in an unconditioned space, it must be located on the pipe closest to the furnace. See Figure 33.

Table 7.

VENT TERMINATION CLEARANCES FOR NON-DIRECT VENT INSTALLATIONS IN THE US AND CANADA

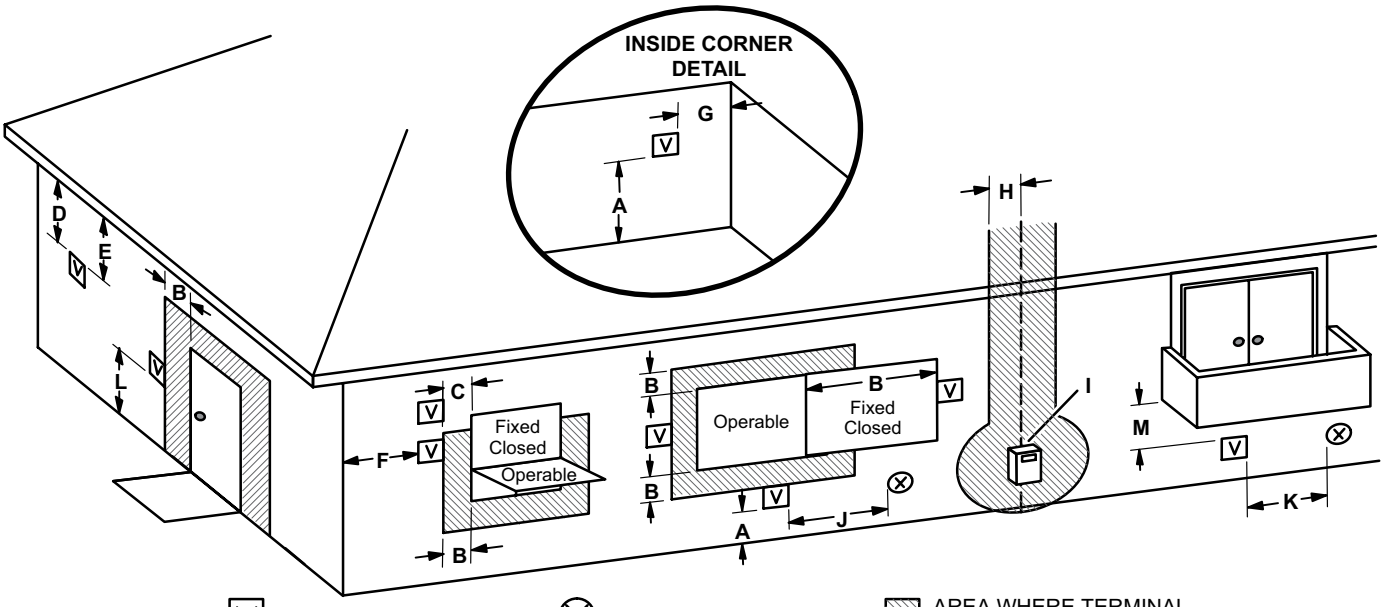

		US Installations[1]	Canadian Installations[2]
A =	Clearance above grade, veranda, porch, deck or balcony	12 inches (305mm) or 12 in. (305mm) above average snow accumulation.	12 inches (305mm) or 12 in. (305mm) above average snow accumulation.
B =	Clearance to window or door that may be opened	4 feet (1.2 m) below or to side of opening; 1 foot (30cm) above opening	6 inches (152mm) for appliances <10,000 Btuh (3kw), 12 inches (305mm) for appliances > 10,000 Btuh (3kw) and <100,000 Btuh (30kw), 36 inches (.9m) for appliances > 100,000 Btuh (30kw)
C =	Clearance to permanently closed window	* 12”	* 12”
D =	Vertical clearance to ventilated soffit located above the terminal within a horizontal distance of 2 feet (610 mm) from the center line of the terminal	* Equal to or greater than soffit depth.	* Equal to or greater than soffit depth.
E =	Clearance to unventilated soffit	* Equal to or greater than soffit depth.	* Equal to or greater than soffit depth.
F =	Clearance to outside corner	* No minimum to outside corner	* No minimum to outside corner
G =	Clearance to inside corner	*	*
H =	Clearance to each side of center line extended above meter / regulator assembly	* 3 feet (.9m) within a height 15 feet (4.5m) above the meter / regulator assembly	3 feet (.9m) within a height 15 feet (4.5m) above the meter / regulator assembly
I =	Clearance to service regulator vent outlet	* 3 feet (.9m)	3 feet (.9m)
J =	Clearance to non-mechanical air supply inlet to building or the combustion air inlet to any other appliance	4 feet (1.2 m) below or to side of opening; 1 foot (30 cm) above opening	6 inches (152mm) for appliances <10,000 Btuh (3kw), 12 inches (305mm) for appliances > 10,000 Btuh (3kw) and <100,000 Btuh (30kw), 36 inches (.9m) for appliances > 100,000 Btuh (30kw)
K =	Clearance to mechanical air supply inlet	3 feet (.9m) above if within 10 feet (3m) horizontally	6 feet (1.8m)
L =	Clearance above paved sidewalk or paved driveway located on public property	7 feet (2.1m)†	7 feet (2.1m)†
M =	Clearance under veranda, porch, deck or balcony	*12 inches (305mm)‡	12 inches (305mm)‡

[1] In accordance with the current ANSI Z223.1/NFPA 54 Natural Fuel Gas Code
[2] In accordance with the current CSA B149.1, Natural Gas and Propane Installation Code
† A vent shall not terminate directly above a sidewalk or paved driveway that is located between two single family dwellings and serves both dwellings.
‡ Permitted only if veranda, porch, deck or balcony is fully open on a minimum of two sides beneath the floor. Allied Air recommends avoiding this location if possible.

*For clearances not specified in ANSI Z223.1/NFPA 54 or CSA B149.1, clearance will be in accordance with local installation codes and the requirements of the gas supplier and these installation instructions.”

Figure 34. Vent Termination Clearances for Non-Direct Vent Installations

VENT TERMINATION CLEARANCES FOR DIRECT VENT INSTALLATIONS IN THE USA AND CANADA

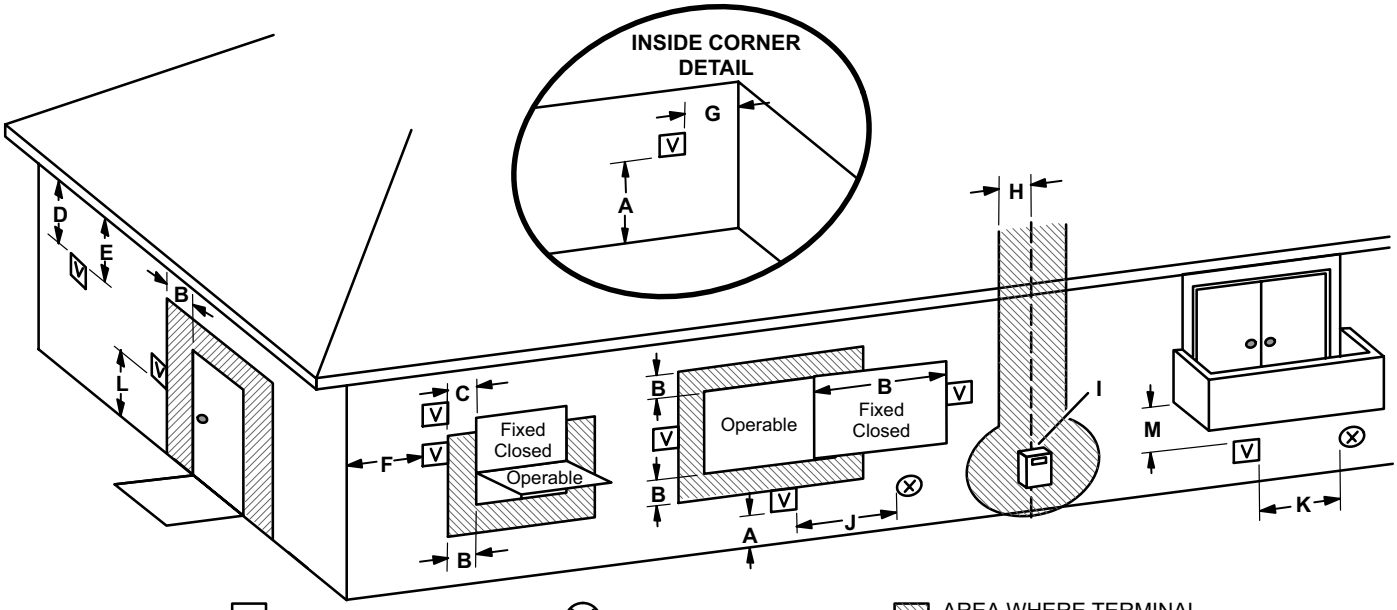

V VENT TERMINAL ⊗ AIR SUPPLY INLET AREA WHERE TERMINAL IS NOT PERMITTED

		US Installations[1]	Canadian Installations[2]
A =	Clearance above grade, veranda, porch, deck or balcony	12 inches (305mm) or 12 in. (305mm) above average snow accumulation.	12 inches (305mm) or 12 in. (305mm) above average snow accumulation.
B =	Clearance to window or door that may be opened	6 inches (152mm) for appliances <10,000 Btuh (3kw), 9 inches (228mm) for appliances > 10,000 Btuh (3kw) and <50,000 Btuh (15kw), 12 inches (305mm) for appliances > 50,000 Btuh (15kw)	6 inches (152mm) for appliances <10,000 Btuh (3kw), 12 inches (305mm) for appliances > 10,000 Btuh (3kw) and <100,000 Btuh (30kw), 36 inches (.9m) for appliances > 100,000 Btuh (30kw)
C =	Clearance to permanently closed window	* 12”	* 12”
D =	Vertical clearance to ventilated soffit located above the terminal within a horizontal distance of 2 feet (610mm) from the center line of the terminal	* Equal to or greater than soffit depth	* Equal to or greater than soffit depth
E =	Clearance to unventilated soffit	* Equal to or greater than soffit depth	* Equal to or greater than soffit depth
F =	Clearance to outside corner	* No minimum to outside corner	* No minimum to outside corner
G =	Clearance to inside corner	*	*
H =	Clearance to each side of center line extended above meter / regulator assembly	3 feet (.9m) within a height 15 feet (4.5m) above the meter / regulator assembly	3 feet (.9m) within a height 15 feet (4.5m) above the meter / regulator assembly
I =	Clearance to service regulator vent outlet	* 3 feet (.9m)	3 feet (.9m)
J =	Clearance to non-mechanical air supply inlet to building or the combustion air inlet to any other appliance	6 inches (152mm) for appliances <10,000 Btuh (3kw), 9 inches (228mm) for appliances > 10,000 Btuh (3kw) and <50,000 Btuh (15kw), 12 inches (305mm) for appliances > 50,000 Btuh (15kw)	6 inches (152mm) for appliances <10,000 Btuh (3kw), 12 inches (305mm) for appliances > 10,000 Btuh (3kw) and <100,000 Btuh (30kw), 36 inches (.9m) for appliances > 100,000 Btuh (30kw)
K =	Clearance to mechanical air supply inlet	3 feet (.9m) above if within 10 feet (3m) horizontally	6 feet (1.8m)
L =	Clearance above paved sidewalk or paved driveway located on public property	* 7 feet (2.1m)	7 feet (2.1m)†
M =	Clearance under veranda, porch, deck or balcony	*12 inches (305mm)‡	12 inches (305mm)‡

[1] In accordance with the current ANSI Z223.1/NFPA 54 Natural Fuel Gas Code

[2] In accordance with the current CSA B149.1, Natural Gas and Propane Installation Code

† A vent shall not terminate directly above a sidewalk or paved driveway that is located between two single family dwellings and serves both dwellings.

‡ Permitted only if veranda, porch, deck or balcony is fully open on a minimum of two sides beneath the floor. Allied Air recommends avoiding this location if possible.

*For clearances not specified in ANSI Z223.1/NFPA 54 or CSA B149.1, clearance will be in accordance with local installation codes and the requirements of the gas supplier and these installation instructions.”

Figure 35. Vent Termination Clearances for Direct Vent Installations

In both Non–Direct Vent and Direct Vent applications, the vent termination is limited by local building codes. In the absence of local codes, refer to the current National Fuel Gas Code ANSI Z223-1/NFPA 54 in U.S.A., and current CSA-B149 Natural Gas and Propane Installation Codes in Canada for details.
Position termination according to location given in Figure 34 or Figure 35. In addition, position termination so it is free from any obstructions and 12” above the average snow accumulation.

At vent termination, care must be taken to maintain protective coatings over building materials (prolonged exposure to exhaust condensate can destroy protective coatings). It is recommended that the exhaust outlet not be located within 6 feet (1.8 m) of a condensing unit because the condensate can damage the painted coating.

NOTE: *See Table 7 for maximum allowed exhaust pipe length without insulation in unconditioned space during winter design temperature is below 32° F (0° C). If required, exhaust piping should be insulated with 1/2” (13 mm), Armaflex or equivalent. In extremely cold climate areas with temperature below 20° F (6.7° C) it is recommended that, 3/4” (19 mm) Armaflex or equivalent be used. Insulation on outside runs of exhaust pipe may be painted or wrapped to protect insulation from deterioration in accordance with the insulation manufacturers recommendation. Exhaust pipe insulation may not be necessary in some specific applications.*

NOTE: *During extremely cold temperatures, below approximately 20° F (6.7° C), units with long runs of vent pipe through unconditioned space, even when insulated, may form ice in the exhaust termination that prevents the unit from operating properly. Longer run times of at least 5 minutes will alleviate most icing problems. Also, a heating cable may be installed on exhaust piping and termination to prevent freeze-ups. Heating cable installation kits are available. See unit specification sheets for part numbers.*

⚠ IMPORTANT

Do not use screens or perforated metal in exhaust terminations. Doing so will cause freeze-ups and may block the terminations.

⚠ IMPORTANT

For Canadian Installations Only:

In accordance to CSA International B149 installation codes, the minimum allowed distance between the combustion air intake inlet and the exhaust outlet of other appliances shall not be less than 12 inches (305 mm).

Details of Intake and Exhaust Piping Terminations for Direct Vent Installations

NOTE: *In Direct Vent installations, combustion air is taken from outdoors and flue gases are discharged to outdoors.*

NOTE: *Flue gas may be slightly acidic and may adversely affect some building materials. If any vent termination is used and the flue gases may impinge on the building material, a corrosion-resistant shield (minimum 24 inches square) must be used to protect the wall surface. If the optional tee is used, the protective shield is required. The shield should be constructed using wood, plastic, sheet metal or other suitable material. All seams, joints, cracks, etc. in the affected area should be sealed using an appropriate sealant. See Figure 44.*

Intake and exhaust pipes may be routed either horizontally through and outside wall or vertically through the roof. In attic or closet installations, vertical termination through the roof is preferred. Figure 36 through Figure 43 show typical terminations.

1. Intake and exhaust terminations are not required to be in the same pressure zone. You may exit the intake on one side of the structure and the exhaust on another side (Figure 37). You may exit the exhaust out the roof and the intake out the side of the structure (Figure 38).
2. Intake and exhaust pipes should be placed as close together as possible at termination end (refer to illustrations). Minimum separation is 3” (76 mm) on roof terminations and 6” (152 mm) on sidewall terminations.
3. On roof terminations, the intake piping should terminate straight down using two 90° elbows (see Figure 36).
4. Exhaust piping must terminate straight out or up as shown. A reducer may be required on the exhaust piping at the point where it exits the structure to improve the velocity of exhaust away from the intake piping. See Table 8.

Capacity	Exhaust Pipe Size	Termination Pipe Size
*030, 045 and 070	1-1/2” (38 mm), 2” (51 mm), 2-1/2” (64 mm), 3” (76 mm)	1-1/2” (38 mm)
*090	2” (51 mm), 2-1/2” (64 mm), 3” (76 mm)	2” (51 mm)
110		
* -030, -045, -070, and -090 units with the flush mount termination must use the 1-1/2” accelerator supplied with the kit.		

Table 8. Exhaust Pipe Termination Size Reduction

NOTE: *Care must be taken to avoid recirculation of exhaust back into intake pipe.*

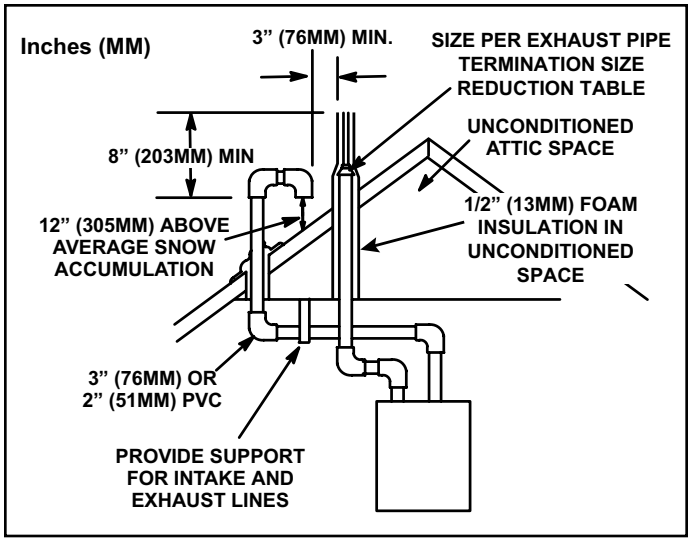

Figure 36. Direct Vent Roof Termination Kit 15F75 or 44J41

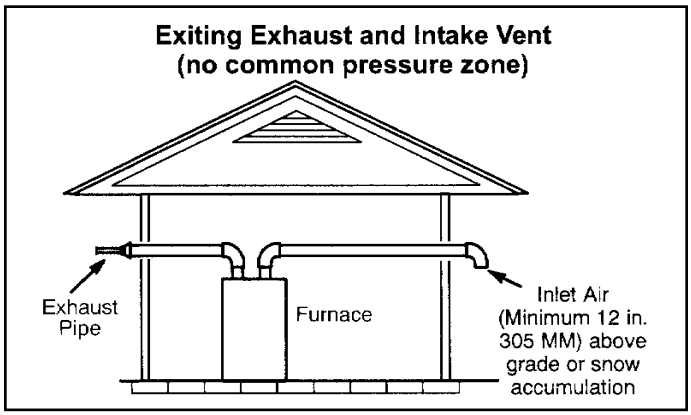

Figure 37.

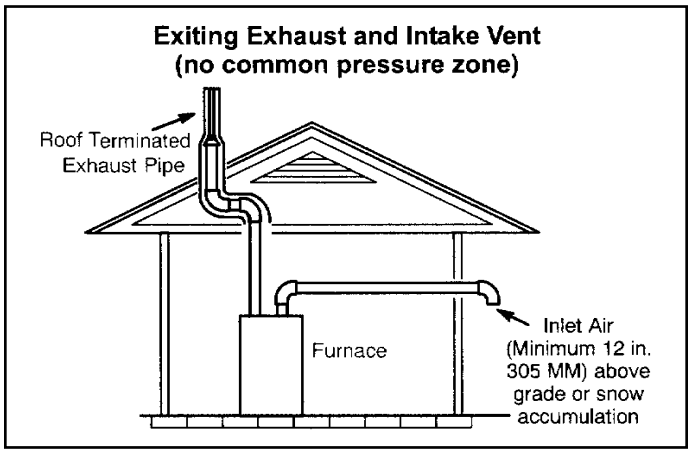

Figure 38.

5. On field supplied terminations for sidewall exit, exhaust piping may extend a maximum of 12 inches (305 mm) for 2" PVC and 20 inches (508 mm) for 3" (76 mm) PVC beyond the outside wall. Intake piping should be as short as possible. See Figure 44.
6. On field supplied terminations, a minimum distance between the end of the exhaust pipe and the end of the intake pipe without a termination elbow is 8" and a minimum distance of 6" with a termination elbow. See Figure 44.
7. If intake and exhaust piping must be run up a side wall to position above snow accumulation or other obstructions, piping must be supported every 24" (610 mm) as shown in Figure 44. Exhaust and intake piping that is run up a wall is considered to be in an unconditioned space, so piping should be sized according to Table 7. The intake piping may be equipped with a 90° elbow turndown. Using turndown will add 5 feet (1.5 m) to the equivalent length of the pipe.
8. A multiple furnace installation may use a group of up to four terminations assembled together horizontally, as shown in Figure 42.

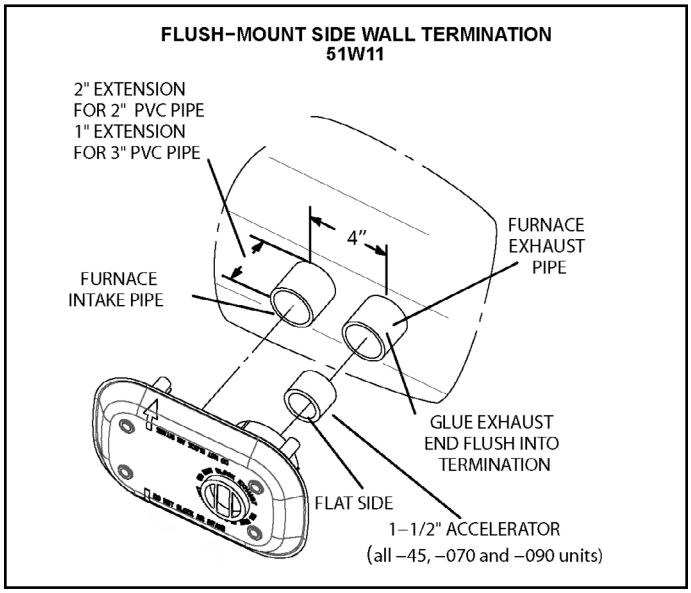

Figure 39.

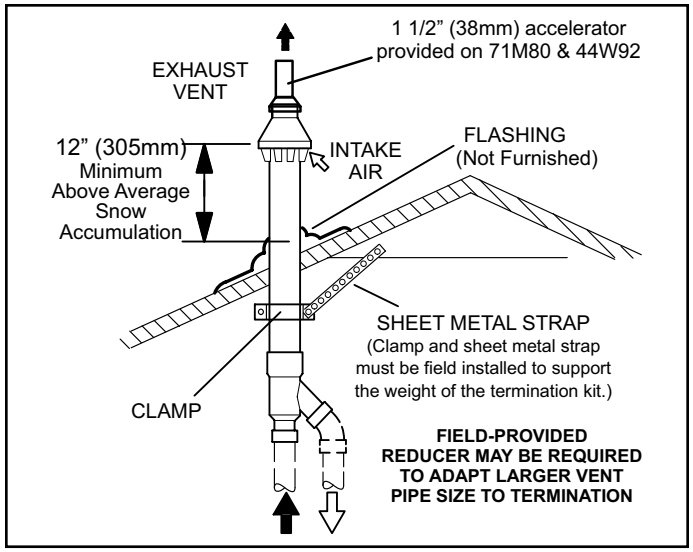

Figure 40. Direct Vent Concentric Rooftop Termination
71M80, 69M29 or 60L46 (US)
44W92 or 44W93 (Canada)

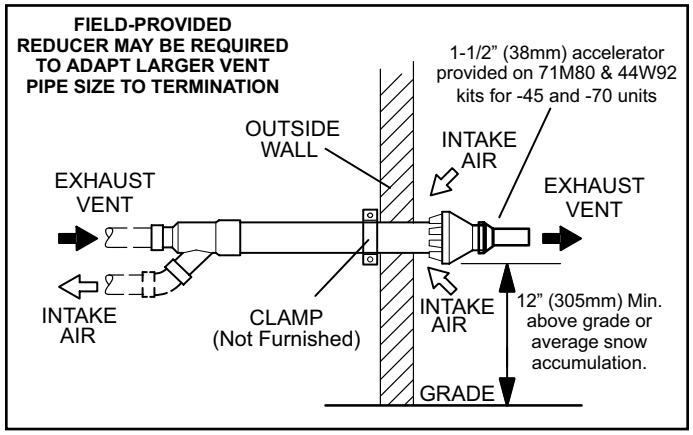

Figure 41. Direct Vent Concentric Wall Termination
71M80, 69M29 or 60L46 (US)
44W92 or 44W93 (Canada)

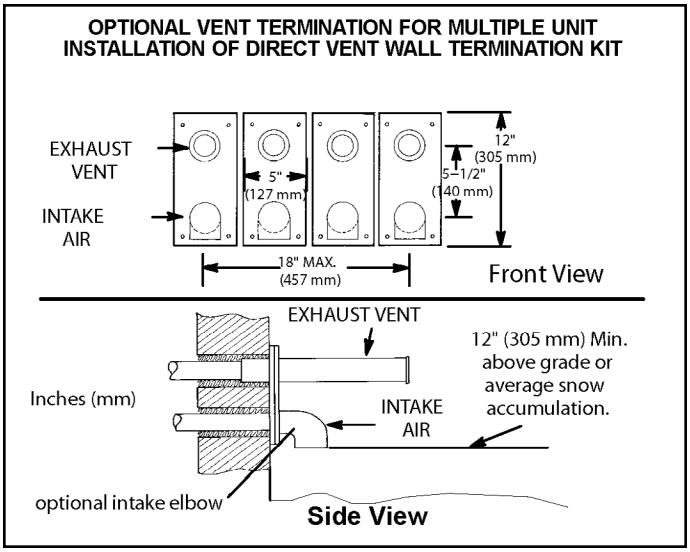

Figure 42.

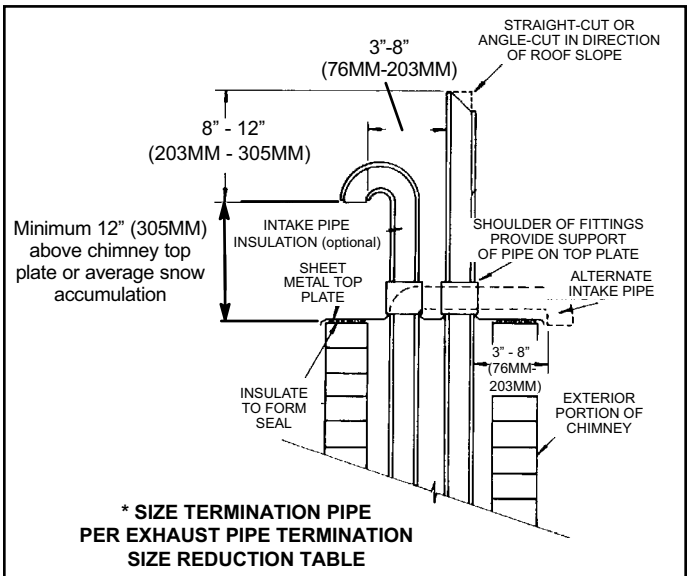

NOTE: Do not discharge exhaust gases directly into any chimney or vent stack. If vertical discharge through an existing unused chimney or stack is required, insert piping inside chimney until the pipe open end is above top of chimney and terminate as illustrated. In any exterior portion of chimney, the exhaust vent must be insulated.

Figure 43. Direct Vent Application Using Existing Chimney

FIELD FABRICATED WALL TERMINATION

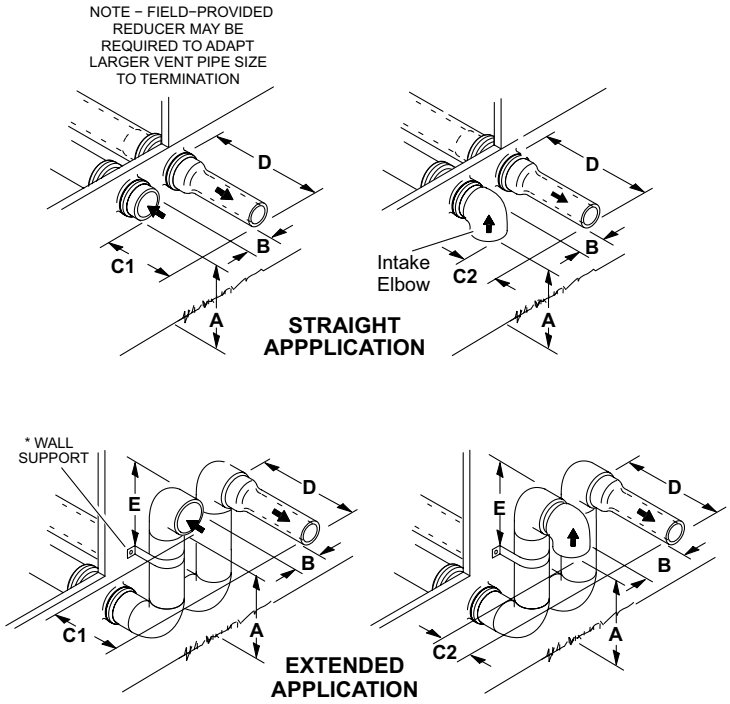

	2” (51mm) Vent Pipe	3” (76mm) Vent Pipe
A− Minimum clearance above grade or average snow accumulation	12” (305 mm)	12” (305 mm)
B− Maximum horizontal separation between intake and exhaust	6” (152 mm)	6” (152 mm)
C1 -Minimum from end of exhaust to inlet of intake	8” (203 mm)	8” (203 mm)
C2 -Minimum from end of exhaust to inlet of intake	6” (152 mm)	6” (152 mm)
D− Maximum exhaust pipe length	12” (305 mm)	20” (508 mm)
E− Maximum wall support distance from top of each pipe (intake/exhaust)	6” (152 mm)	6” (152 mm)

* Use wall support every 24” (610 mm). Use two wall supports if extension is greater than 24” (610 mm) but less than 48” (1219 mm).
NOTE − One wall support must be within 6” (152 mm) from top of each pipe (intake and exhaust) to prevent movement in any direction.

ALTERNATE TERMINATIONS (TEE & FORTY−FIVE DEGREE ELBOWS ONLY)

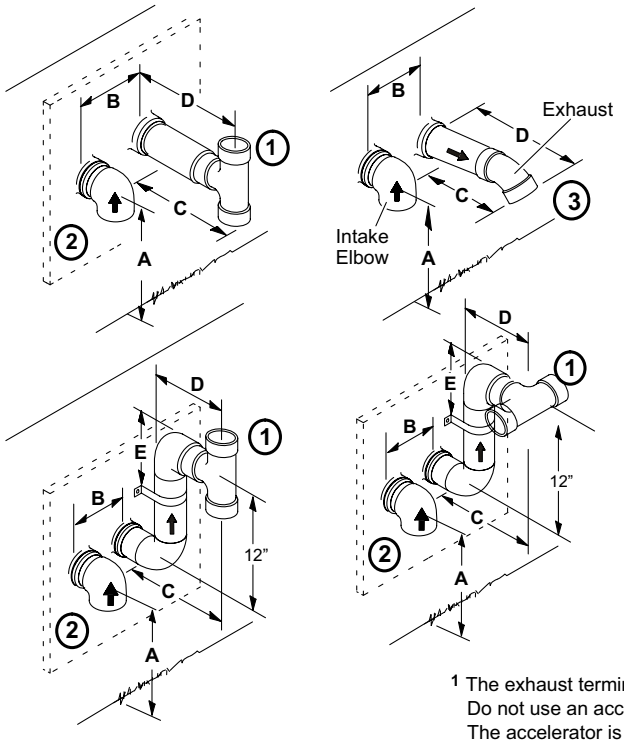

	2” (51MM) Vent Pipe	3” (76MM) Vent Pipe
A− Clearance above grade or average snow accumulation	12” (305 mm) Min.	12” (305 mm) Min.
B− Horizontal separation between intake and exhaust	6” (152 mm) Min. 24” (610 mm) Max.	6” (152 mm) Min. 24” (610 mm) Max.
C− Minimum from end of exhaust to inlet of intake	9” (227 mm) Min.	9” (227 mm) Min.
D− Exhaust pipe length	12” (305 mm) Min. 16” (405 mm) Max.	12” (305 mm) Min. 20” (508 mm) Max.
E− Wall support distance from top of each pipe (intake/exhaust)	6” (152 mm) Max.	6” (152 mm) Max.

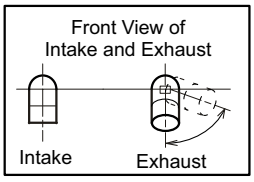

[1] The exhaust termination tee should be connected to the 2” or 3” PVC flue pipe as shown in the illustration. Do not use an accelerator in applications that include an exhaust termination tee. The accelerator is not required.
[2] As required. Flue gas may be acidic and may adversely affect some building materials. If a side wall vent termination is used and flue gases will impinge on the building materials, a corrosion-resistant shield (24 inches square) should be used to protect the wall surface. If optional tee is used, the protective shield is recommended. The shield should be constructed using wood, sheet metal or other suitable material. All seams, joints, cracks, etc. in affected area, should be sealed using an appropriate sealant.
[3] Exhaust pipe 45° elbow can be rotated to the side away from the combustion air inlet to direct exhaust away from adjacent property. The exhaust must never be directed toward the combustion air inlet.

Figure 44.

Details of Exhaust Piping Terminations for Non-Direct Vent Applications

Exhaust pipes may be routed either horizontally through an outside wall or vertically through the roof. In attic or closet installations, vertical termination through the roof is preferred. Figure 45 through Figure 48 show typical terminations.

1. Exhaust piping must terminate straight out or up as shown. The termination pipe must be sized as listed in Table 8. The specified pipe size ensures proper velocity required to move the exhaust gases away from the building.
2. On field supplied terminations for side wall exit, exhaust piping may extend a maximum of 12 inches (305 mm) for 2” PVC and 20” (508 mm) for 3” (76 mm) PVC beyond the outside wall. See Figure 46.
3. If exhaust piping must be run up a sidewall to position above snow accumulation or other obstructions, piping must be supported every 24” (610 mm) as shown in Figure 47. When exhaust piping must be run up an outside wall, any reduction in exhaust pipe size must be done after the final elbow.

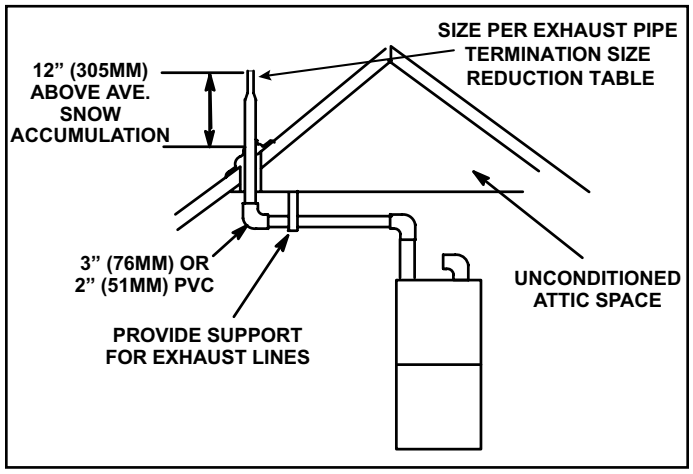

Figure 45. Non-Direct Vent Roof Termination Kit (15F75 or 44J41)

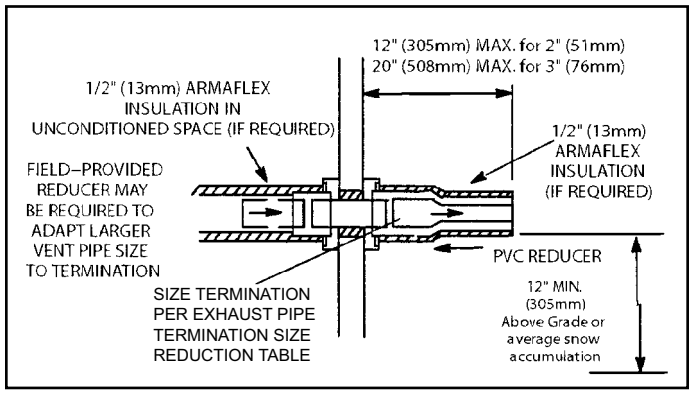

Figure 46. Non-Direct Vent Field Supplied Wall Termination

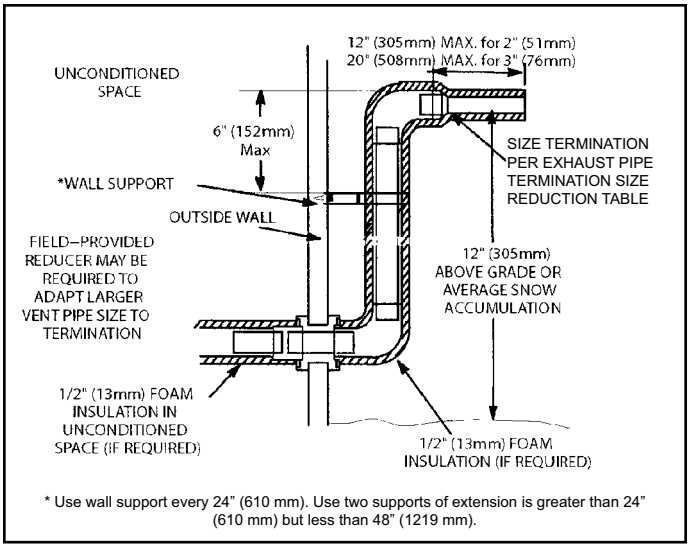

Figure 47. Non-Direct Vent Field Supplied Wall Termination Extermination

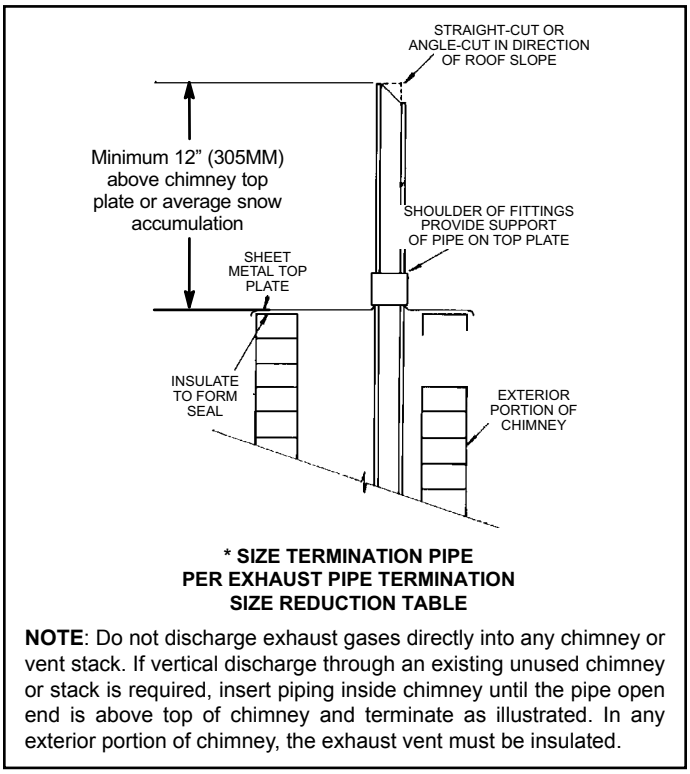

NOTE: Do not discharge exhaust gases directly into any chimney or vent stack. If vertical discharge through an existing unused chimney or stack is required, insert piping inside chimney until the pipe open end is above top of chimney and terminate as illustrated. In any exterior portion of chimney, the exhaust vent must be insulated.

Figure 48. Non-Direct Vent Application Using Existing Chimney

Exhaust through Crawl Space Vent Option

All 33” condensing gas furnaces (92%+) are now approved to be vented down through a crawl space. Ensure a vent pipe drain kit, 51W18 (USA) or 15Z70 (Canada), is used as directed through the floor joists and into the crawl space. See the following figures.

Consult the vent tables for vent lengths and approved materials.

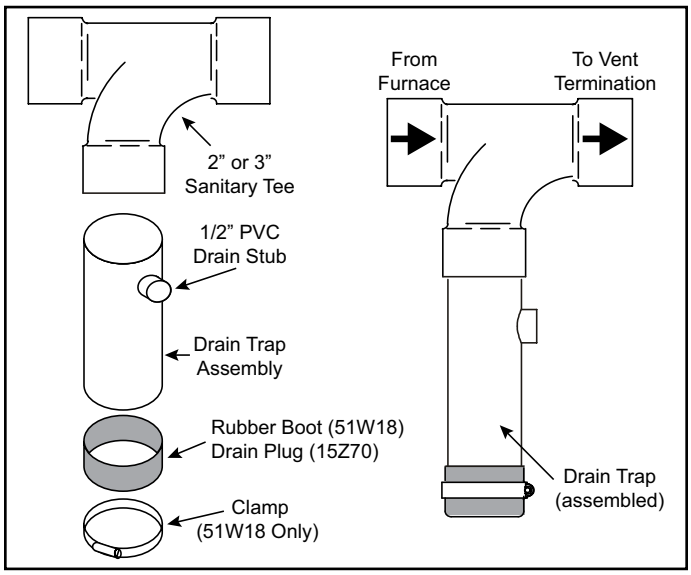

Figure 49. Kit 51W18 (USA) / 15Z70 (Canada) Parts Identification and Assembly

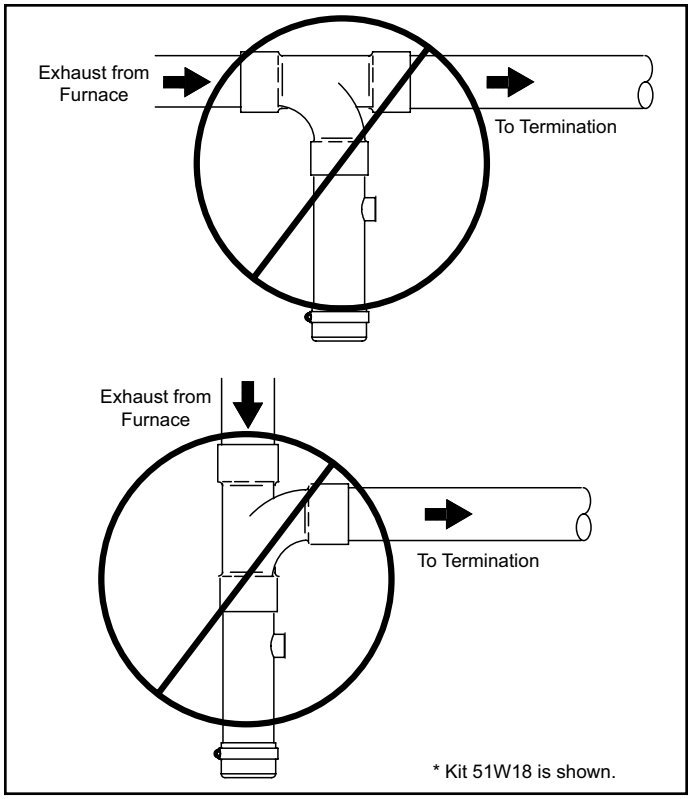

Figure 50. Crawl Space Vent Pipe Drain Trap Assembled Incorrectly

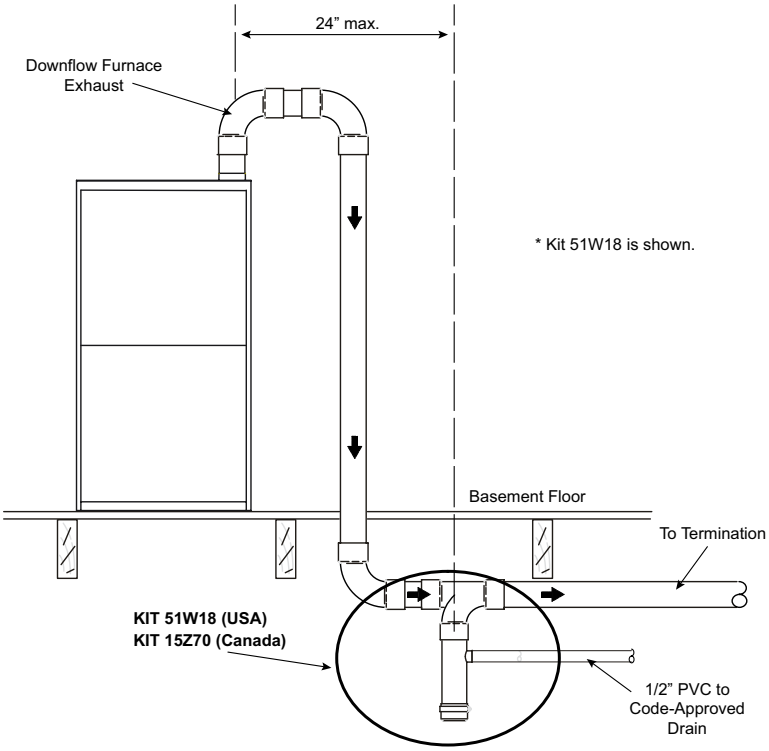

NOTE: *Upflow furnaces exhaust from the left side. All dimensions shown are typical for upflow or downflow furnaces.*

NOTE: *All horizontal runs of exhaust pipe must slope back toward the kit a minimum of 1/4” (6mm) for each 12” (305mm) to ensure drainage.*

Figure 51. Upflow or Downflow Furnace with Exhaust through Crawl Space

Condensate Piping

This unit is designed for either right or left side exit of condensate piping in upflow applications. In horizontal applications, the condensate trap must extend below the unit. An 8” service clearance is required for the condensate trap.

Refer to Figure 52 and Figure 53 for condensate trap locations. Figure 58 shows trap assembly using 1/2” PVC or 3/4” PVC.

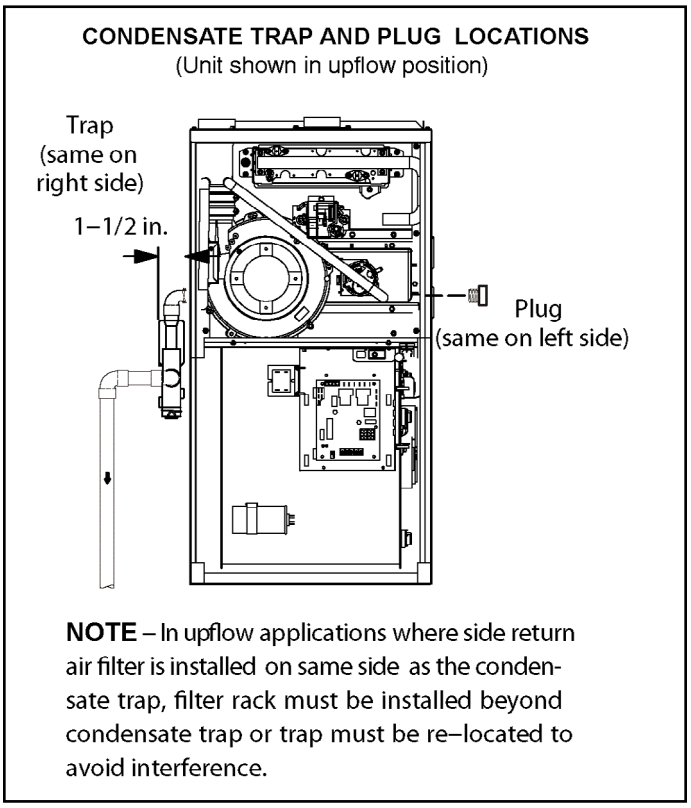

Figure 52.

NOTE: *If necessary the condensate trap may be installed up to 5’ away from the furnace. Use PVC pipe to connect trap to furnace condensate outlet. Piping from furnace must slope down a minimum of 1/4” per ft. toward trap.*

1. Determine which side condensate piping will exit the unit, location of trap, field-provided fittings and length of PVC pipe required to reach available drain.
2. Use a large flat head screw driver or an 1/2” drive socket extension and remove plug (Figure 52) from the cold end header box at the appropriate location on the side of the unit. Install provided 3/4 NPT street elbow fitting into cold end header box. Use Teflon tape or appropriate pipe dope.
3. Install the cap over the clean out opening at the base of the trap. Secure with clamp. See Figure 58.
4. Install drain trap using appropriate PVC fittings, glue all joints. Glue the provided drain trap as shown in Figure 58. Route the condensate line to an open drain. Condensate line must maintain a 1/4” downward slope from the furnace to the drain.

⚠ CAUTION

Do not use copper tubing or existing copper condensate lines for drain line.

5. Install field provided vent on trap assembly as shown in Figure 53 through Figure 59. Trap must extend at least 1” above the furnace condensate drain connection in upflow applications and 4-1/2” above the bottom of the cabinet in horizontal applications.
6. If unit will be started immediately upon completion of installation, prime trap per procedure outlined in Unit Start-Up section.

Condensate line must slope downward away from the trap to drain. If drain level is above condensate trap, condensate pump must be used. Condensate drain line should be routed within the conditioned space to avoid freezing of condensate and blockage of drain line. If this is not possible, a heat cable kit may be used on the condensate trap and line. Heating cable kit is available in various lengths; 6 ft. (1.8 m) - kit no. 26K68; 24 ft. (7.3 m) - kit no. 26K69; and 50 ft. (15.2 m) - kit no. 26K70.

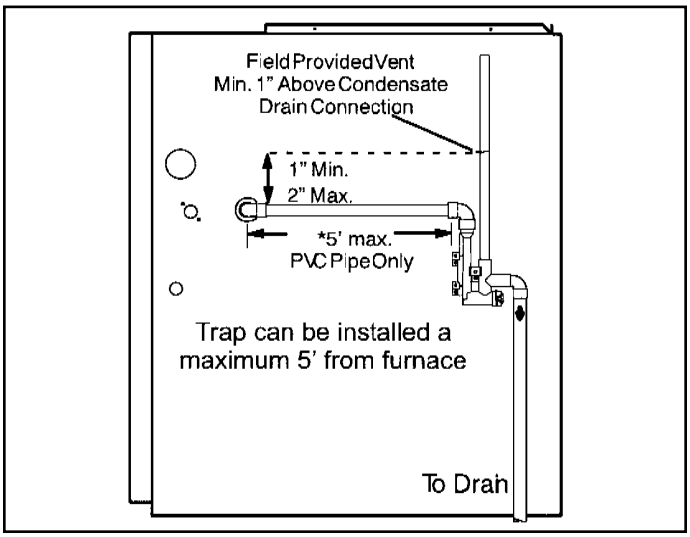

Figure 53. Condensate Trap Locations
(Unit shown in upflow position with remote trap)

⚠ IMPORTANT

When combining the furnace and evaporator coil drains together, the A/C condensate drain outlet must be vented to relieve pressure in order for the furnace pressure switch to operate properly.

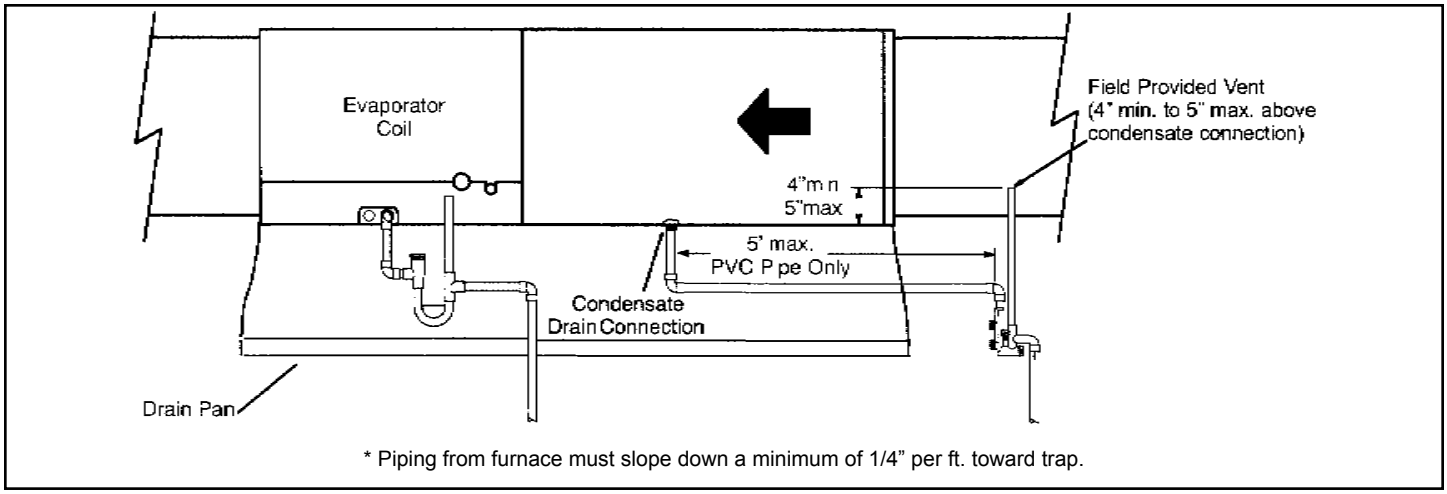

Figure 54. Evaporator Coil Using a Separate Drain
(Unit shown in horizontal right-hand discharge position)

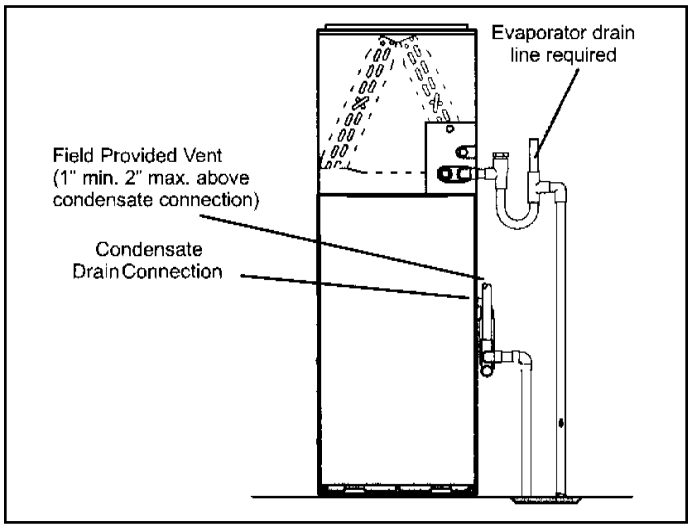

Figure 55. Evaporator Coil Using a Separate Drain

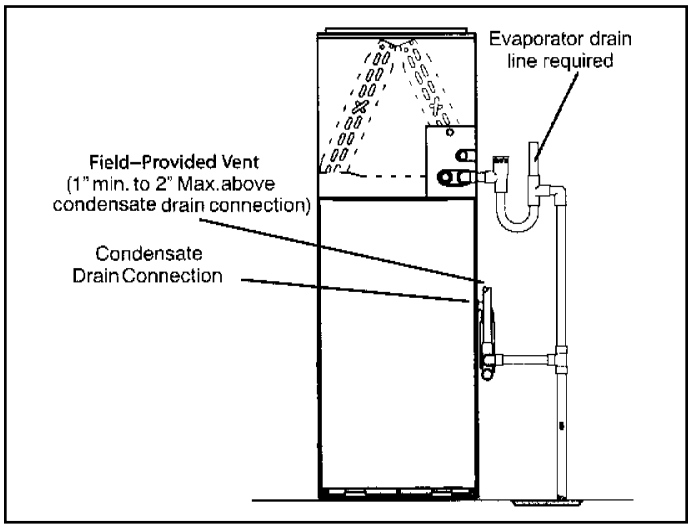

Figure 56. Evaporator Coil Using a Common Drain

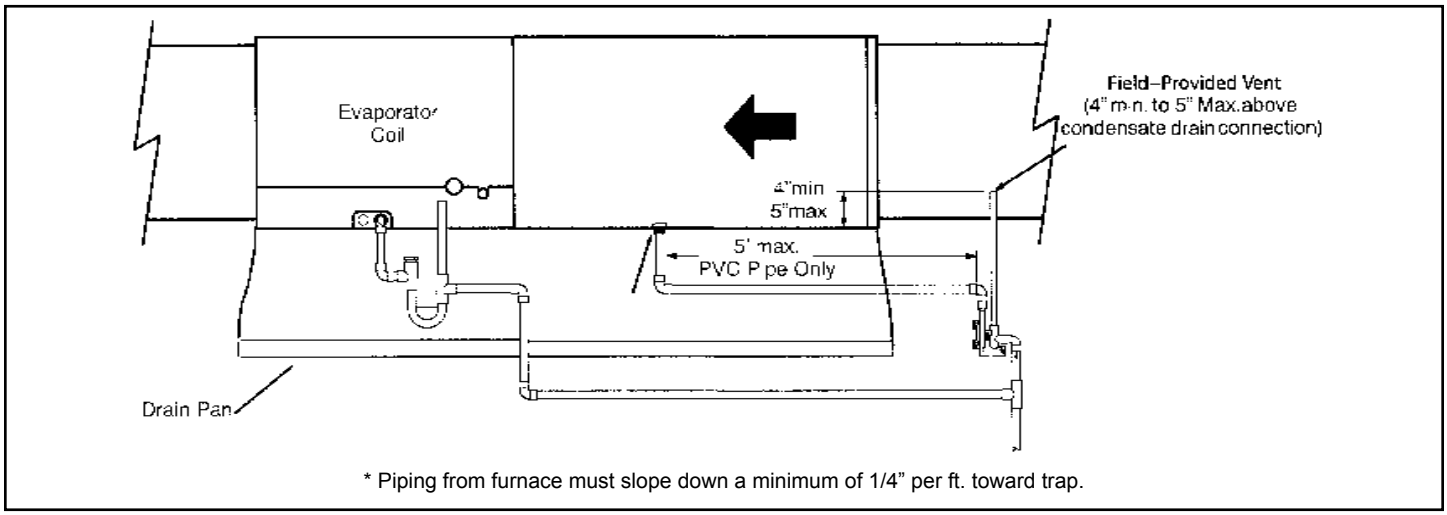

Figure 57. Evaporator Coil Using a Common Drain
(Unit shown in horizontal left-hand discharge position)

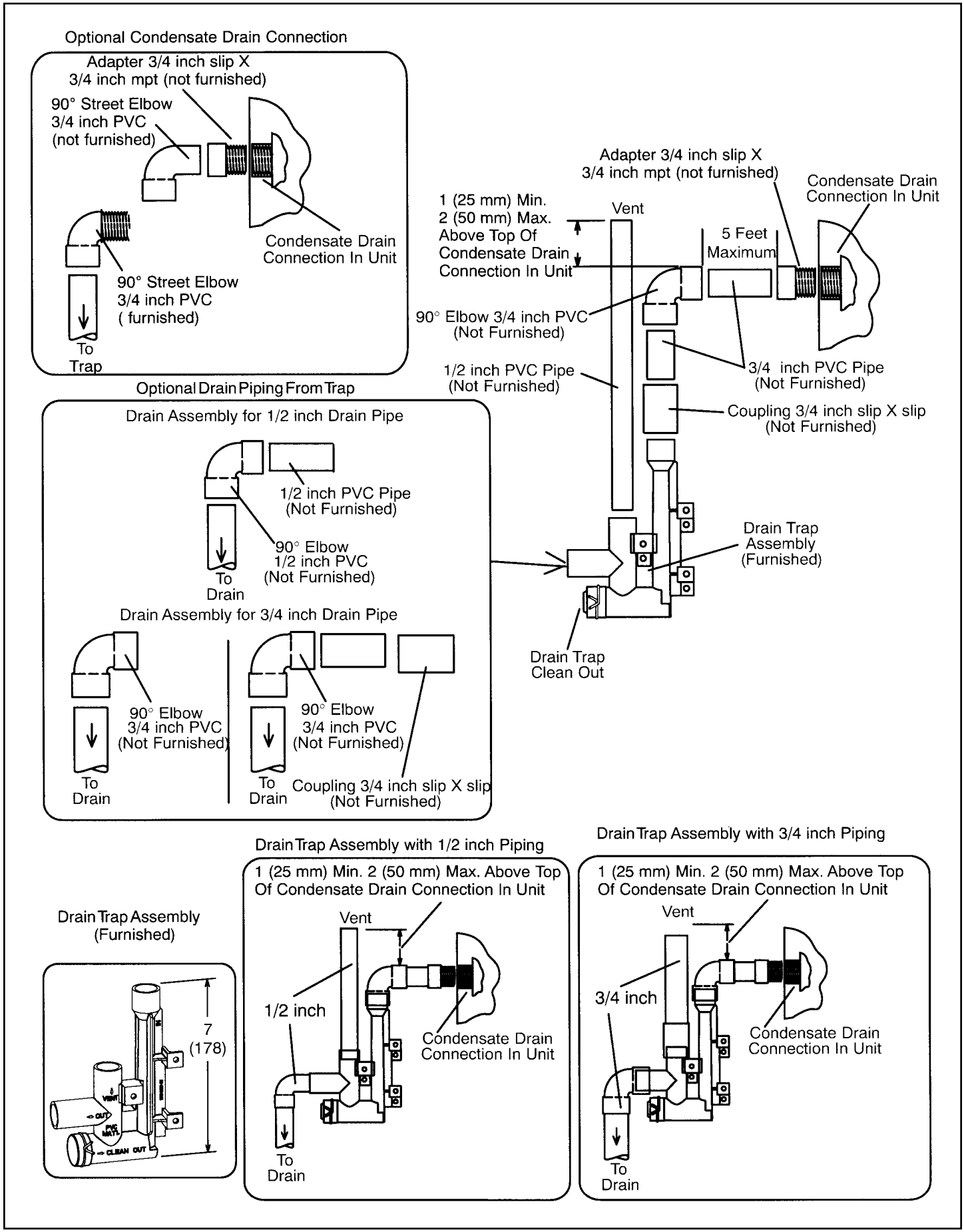

Figure 58. Trap / Drain Assembly Using 1/2" PVC or 3/4" PVC

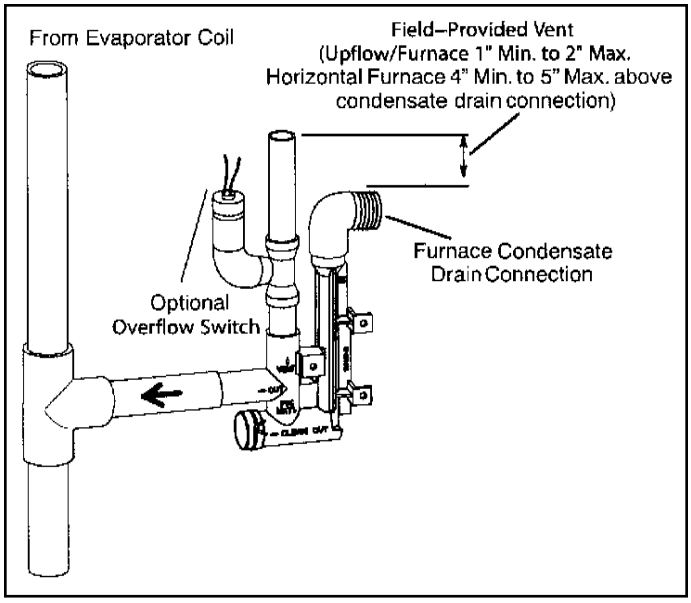

Figure 59. Condensate Trap with Optional Overflow Switch

Gas Piping

⚠ CAUTION

If a flexible gas connector is required or allowed by the authority that has jurisdiction, black iron pipe shall be installed at the gas valve and extend outside the furnace cabinet. The flexible connector can then be added between the black iron pipe and the gas supply line.

⚠ WARNING

Do not exceed 600 in.-lbs. (50 ft.-lbs.) torque when attaching the gas piping to the gas valve.

1. Gas piping may be routed into the unit through either the left or right hand side. Supply piping enters into the gas valve from the side of the valve as shown in Figure 61 and Figure 62.

⚠ IMPORTANT

A low inlet pressure switch in LP/propane applications is recommended.

2. When connecting gas supply, factors such as length of run, number of fittings and furnace rating must be considered to avoid excessive pressure drop. Table 9 list recommended pipe sizes for typical applications.

   NOTE: *Use two wrenches when connecting gas piping to avoid transferring to the manifold.*

3. Gas piping must not run in or through air ducts, clothes chutes, chimneys or gas vents, dumb waiters or elevator shafts. Center gas line through piping hole. Gas line should not touch side of unit. See Figure 61 and Figure 62.
4. Piping should be sloped 1/4 " per 15 feet (6 mm per 5.6 m) upward toward the gas meter from the furnace. The piping must be supported at proper intervals, every 8 to 10 feet (2.44 to 3.05 m), using suitable hangers or straps. Install a drip leg in vertical pipe runs to serve as a trap for sediment or condensate.
5. A 1/8" N.P.T. plugged tap or pressure post is located on the gas valve to facilitate test gauge connection. See Figure 60.
6. In some localities, codes may require installation of a manual main shut-off valve and union (furnished by installer) external to the unit. Union must be of the ground joint type.

⚠ IMPORTANT

Compounds used on threaded joints of gas piping must be resistant to the actions of liquified petroleum gases.

Leak Check

After gas piping is completed, carefully check all piping connections (factory and field installed) for gas leaks. Use a leak detecting solution or other preferred means.

Never use an open flame to test for gas leaks. Check all connections using a commercially available soap solution made specifically for leak detection.

The furnace must be isolated from the gas supply system by closing its individual manual shut-off valve during any pressure testing of the gas supply system at pressures more than or equal to 1/2 psig (3.48 kPa, 14 inches w.c.).

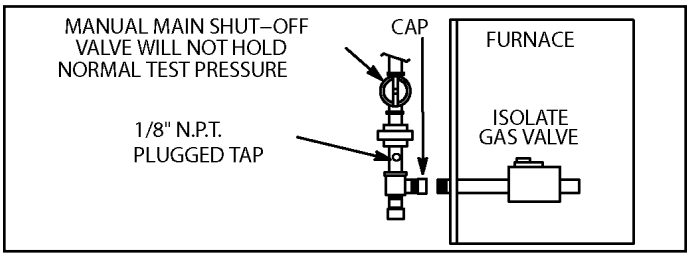

Figure 60.

⚠ IMPORTANT

When testing pressure of gas lines, gas valve must be disconnected and isolated. See Figure 60. Gas valves can be damaged if subjected to pressures greater than 1/2 psig (3.48 kPa).

⚠ WARNING

FIRE OR EXPLOSION HAZARD

Failure to follow the safety warnings exactly could result in serious injury, death, or property damage. Never use an open flame to test for gas leaks. Check all connections using a commercially available soap solution made specifically for leak detection. Some soaps used for leak detection are corrosive to certain metals. Carefully rinse piping thoroughly after leak test has been completed.

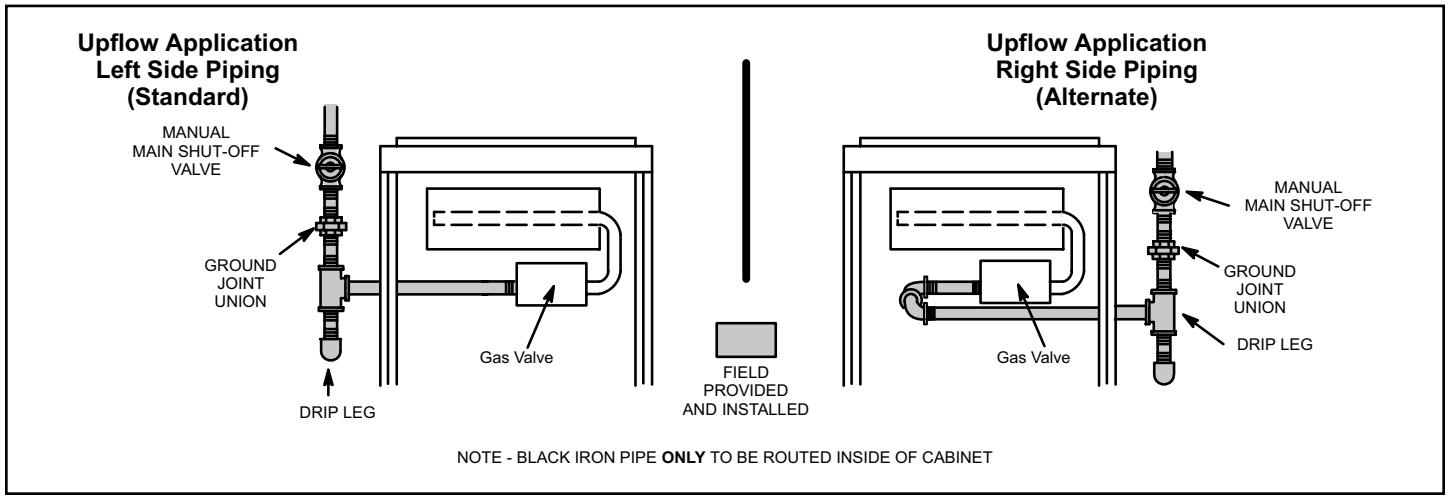

Figure 61. Gas Piping
Upflow Applications

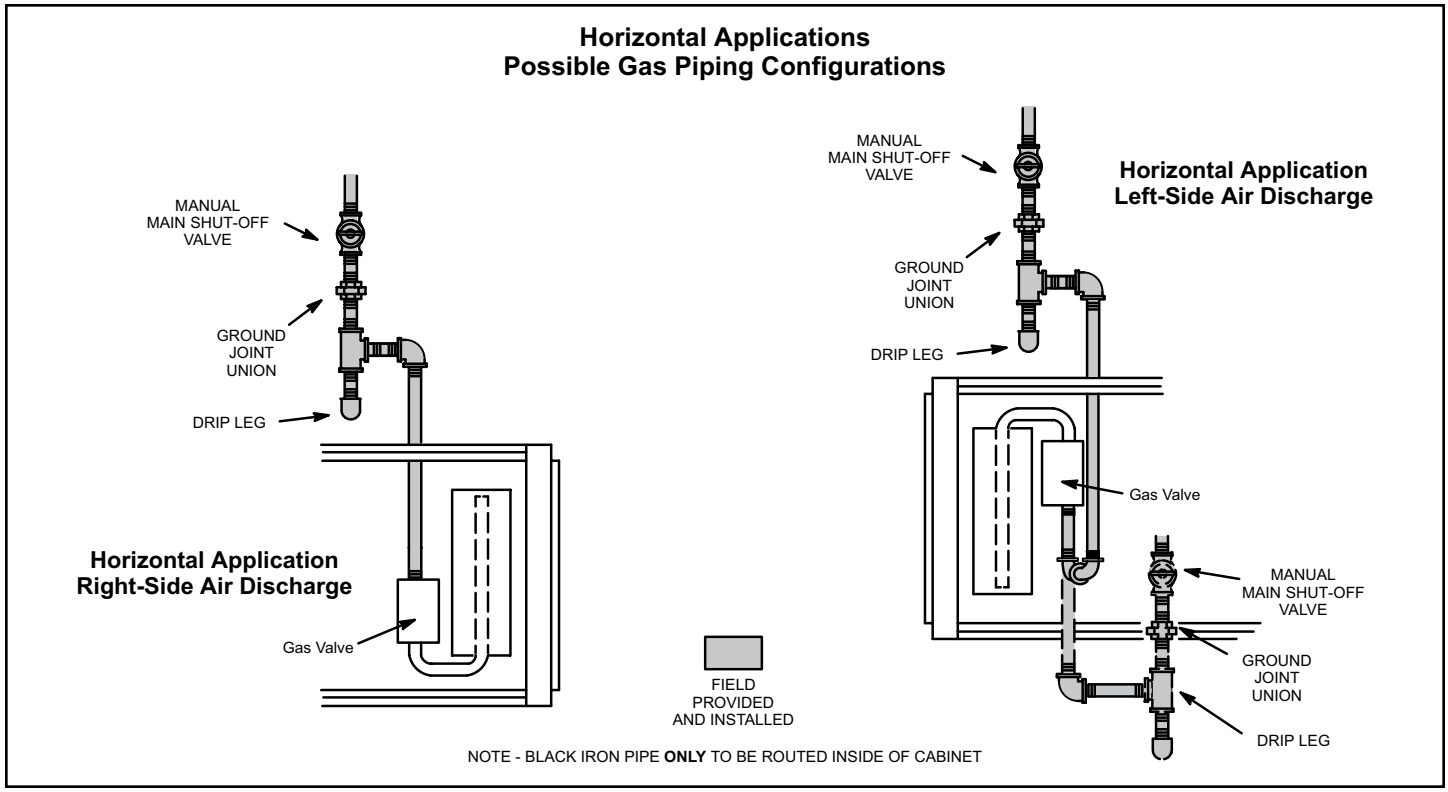

Figure 62. Gas Piping
Horizontal Applications

Gas Pipe Capacity - FT³/HR (kL/HR)

Nominal Iron Pipe Size - inches (mm)	Internal Diameter - inches (mm)	Length of Pipe - feet (m)									
		10 (3.048)	20 (6.096)	30 (9.144)	40 (12.192)	50 (15.240)	60 (18.288)	70 (21.336)	80 (24.384)	90 (27.432)	100 (30.480)
1/2 (12.7)	.622 (17.799)	175 (4.96)	120 (3.40)	97 (2.75)	82 (2.32)	73 (2.07)	66 (1.87)	61 (1.73)	57 (1.61)	53 (1.50)	50 (1.42)
3/4 (19.05)	.824 (20.930)	360 (10.19)	250 (7.08)	200 (5.66)	170 (4.81)	151 (4.28)	138 (3.91)	125 (3.54)	118 (3.34)	110 (3.11)	103 (2.92)
1 (25.4)	1.049 (26.645)	680 (19.25)	465 (13.17)	375 (10.62)	320 (9.06)	285 (8.07)	260 (7.36)	240 (6.80)	220 (6.23)	205 (5.80)	195 (5.52)
1-1/4 (31.75)	1.380 (35.052)	1400 (39.64)	950 (26.90)	770 (21.80)	660 (18.69)	580 (16.42)	530 (15.01)	490 (13.87)	460 (13.03)	430 (12.18)	400 (11.33)
1-1/2 (38.1)	1.610 (40.894)	2100 (59.46)	460 (41.34)	1180 (33.41)	990 (28.03)	900 (25.48)	810 (22.94)	750 (21.24)	690 (19.54)	650 (18.41)	620 (17.56)
2 (50.8)	2.067 (52.502)	3950 (111.85)	2750 (77.87)	2200 (62.30)	1900 (53.80)	1680 (47.57)	1520 (43.04)	1400 (39.64)	1300 (36.81)	1220 (34.55)	1150 (32.56)
2-1/2 (63.5)	2.469 (67.713)	6300 (178.39)	4350 (123.17)	3520 (99.67)	3000 (84.95)	2650 (75.04)	2400 (67.96)	2250 (63.71)	2050 (58.05)	1950 (55.22)	1850 (52.38)
3 (76.2)	3.068 (77.927)	11000 (311.48)	7700 (218.03)	6250 (176.98)	5300 (150.07)	4750 (134.50)	4300 (121.76)	3900 (110.43)	3700 (104.77)	3450 (97.69)	3250 (92.03)
4 (101.6)	4.026 (102.260)	23000 (651.27)	15800 (447.39)	12800 (362.44)	10900 (308.64)	9700 (274.67)	9700 (274.67)	8100 (229.36)	7500 (212.37)	7200 (203.88)	6700 (189.72)

NOTE: *Capacity given in cubic feet of gas per hour (kilo liters of gas per hour) and based on 0.60 specific gravity gas.*

Table 9.

Electrical

ELECTROSTATIC DISCHARGE (ESD)

Precautions and Procedures

⚠ CAUTION

Electrostatic discharge can affect electronic components. Take precautions during furnace installation and service to protect the furnace's electronic controls. Precautions will help to avoid control exposure to electrostatic discharge by putting the furnace, the control and the technician at the same electrostatic potential. Neutralize electrostatic charge by touching hand and all tools on an unpainted unit surface, such as the gas valve or blower deck, before performing any service procedure.

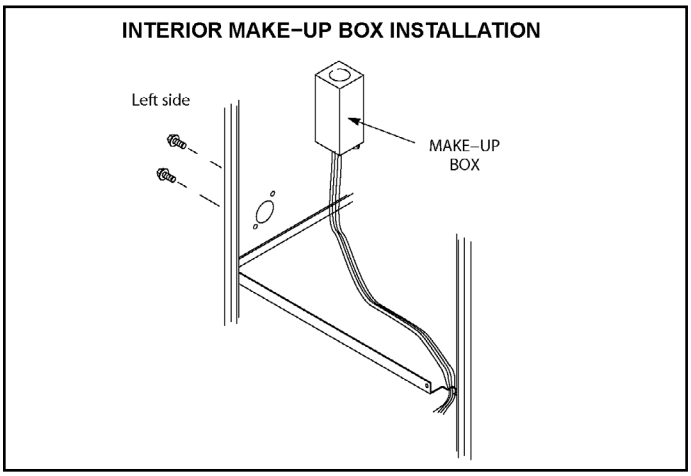

Figure 63.

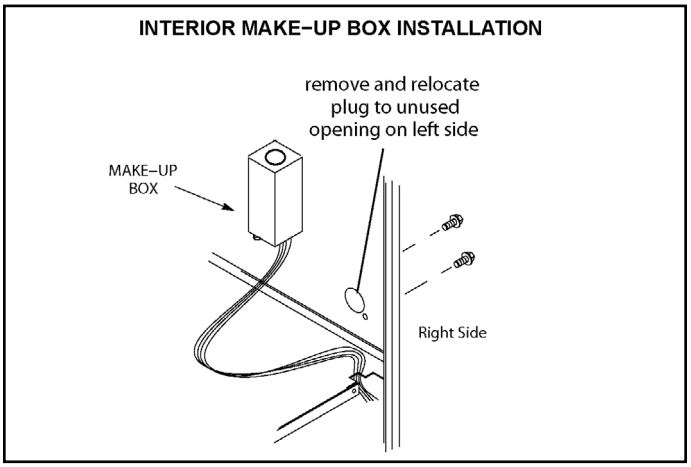

Figure 64.

The unit is equipped with a field makeup box. The makeup box may be moved to the right side of the furnace to facilitate installation. Seal unused openings on left side with plugs removed from right side. Secure the excess wire to the existing harness to protect it from damage.

Refer to Figure 66 for field wiring and Figure 67 for schematic wiring diagram and troubleshooting.

The power supply wiring must meet Class I restrictions. Protected by either a fuse or circuit breaker, select circuit protection and wire size according to unit nameplate.

NOTE: *Unit nameplate states maximum current draw. Maximum Over-Current Protection allowed is 15 AMP.*

Holes are on both sides of the furnace cabinet to facilitate wiring.

Install a separate (properly sized) disconnect switch near the furnace so that power can be turned off for servicing.

Before connecting the thermostat check to make sure the wires will be long enough for servicing at a later date. Make sure that thermostat wire is long enough to facilitate future removal of blower for service.

Complete the wiring connections to the equipment. Use the provided unit wiring diagram and the field wiring diagram shown in Figure 66. Use 18 gauge wire or larger that is suitable for Class II rating for thermostat connections.

Electrically ground the unit according to local codes or, in the absence of local codes, according to the current National Electric Code (ANSI/HFPA No. 70) for the USA and current Canadian Electric Code Part 1 (CSA standard C22.1) for Canada. A green ground wire is provided in the field makeup box.

NOTE: *The gas furnace contains electronic components that are polarity sensitive. Make sure that the furnace is wired correctly and is properly grounded.*

Accessory Terminals

One line voltage "ACC" 1/4" spade terminal is provided on the furnace control board. Any accessory rated up to one amp can be connected to this terminal with the neutral leg of the circuit being connected to one of the provided neutral terminals. If an accessory rated at greater than one amp is connected to this terminal, it is necessary to use an external relay. See Figure 68 for control board configuration. This terminal is energized when the indoor blower is operating.

One line voltage "HUM" 1/4" spade terminal is provided on the furnace control board. Any humidifier rated up to one amp can be connected to this terminal with the neutral leg of the circuit being connected to one of the provided neutral terminals. If a humidifier rated at greater than one amp is connected to this terminal, it is necessary to use an external relay. See Figure 68 for control board configuration. This terminal is energized in the heating mode when the combustion air inducer is operating.

One 24V "HUM" 1/4" spade terminal is provided on the furnace control board. Any humidifier rated up to 0.5 amp can be connected to this terminal with the ground leg of

the circuit connected to ground or the “C” terminal. See Figure 68 for control board configuration. This terminal is energized in the heating mode when the combustion air inducer is operating.

Install the room thermostat according to the instructions provided with the thermostat. See Figure 65 for thermostat designations. If the furnace is being matched with a heat pump, refer to the FM21 installation instruction or appropriate dual fuel thermostat instructions.

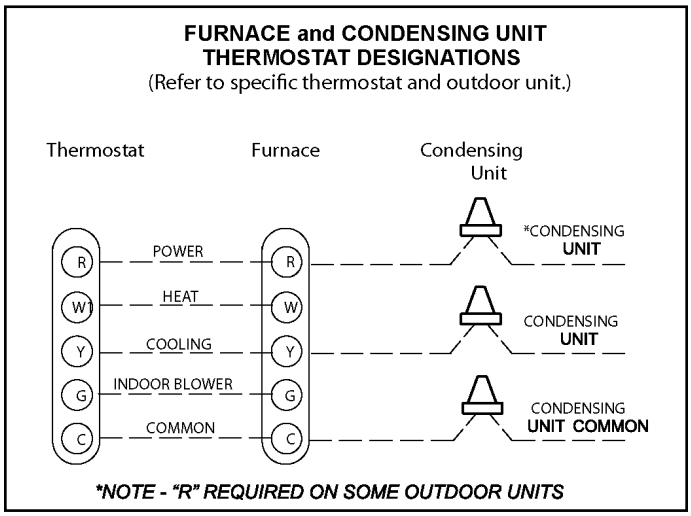

Figure 65.

Indoor Blower Speeds

1. When the thermostat is set to “FAN ON”, the indoor blower will run continuously on the heating speed when there is no cooling or heating demand. See Table 15 for allowable continuous circulation speeds.
2. When the furnace is running in the heating mode, the indoor blower will run on the heating speed.
3. When there is a cooling demand, the indoor blower will run on the cooling speed.

Generator Use - Voltage Requirements

- The furnace requires 120 volts ± 10% (Range: 108 volts to 132 volts)
- The furnace operates at 60 Hz ± 5% (Range: 57 Hz to 63 Hz)
- The furnace integrated control requires both proper polarity and proper ground. Both polarity and proper grounding should be checked before attempting to operate the furnace on either permanent or temporary power.
- Generator should have a wave form distortion of less than 5% THD (total harmonic distortion).

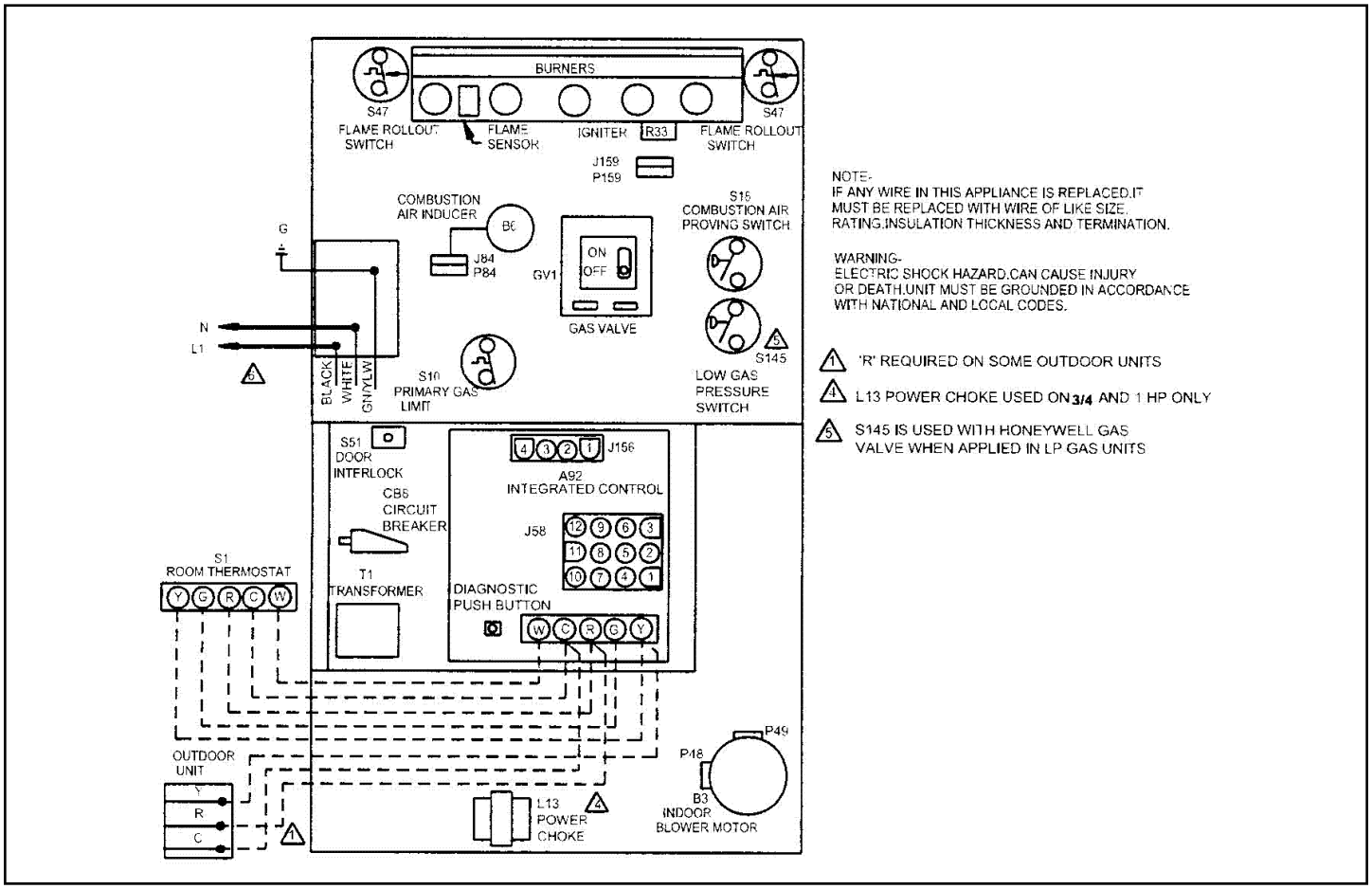

Figure 66. Typical Field Wiring Diagram

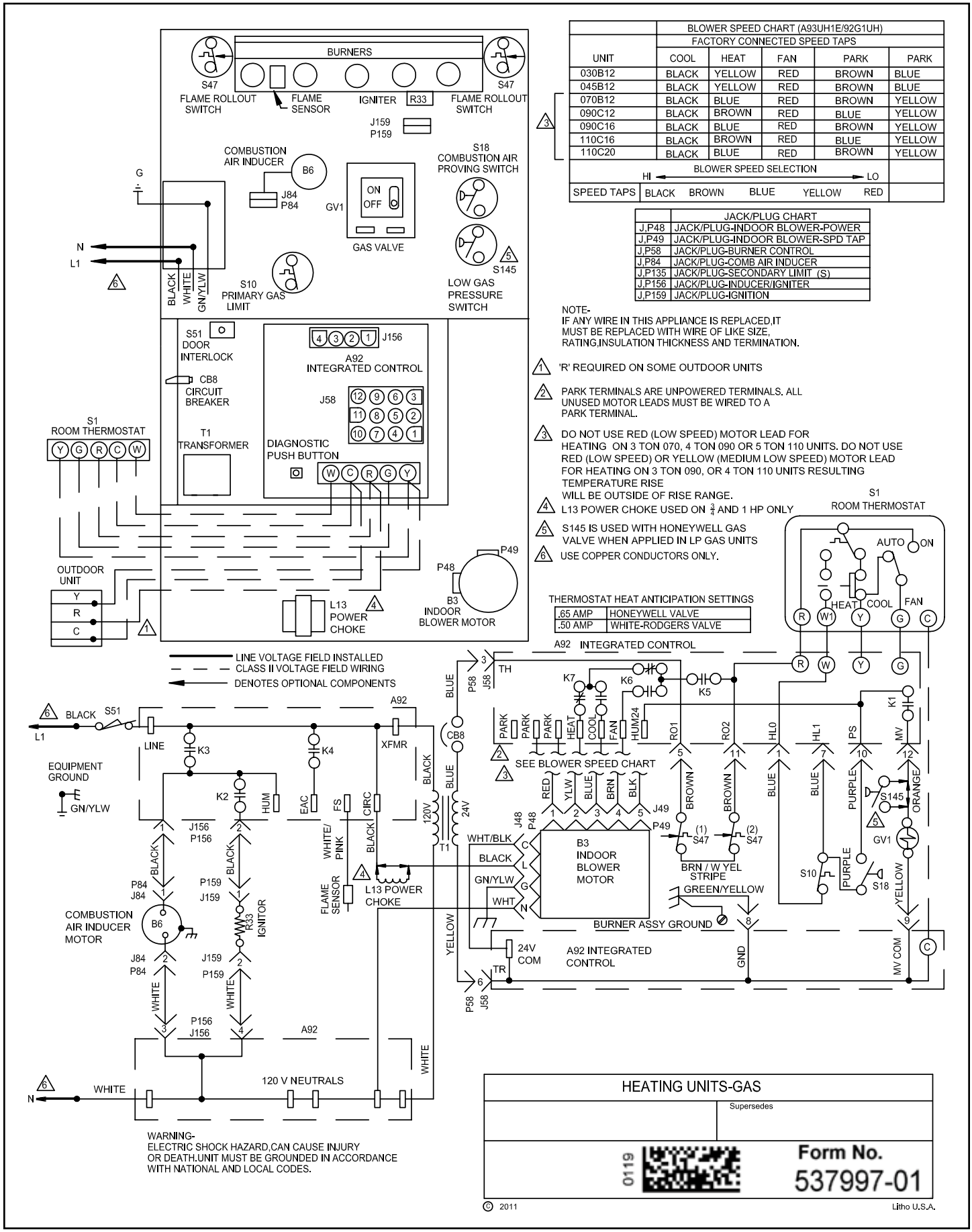

	BLOWER SPEED CHART (A93UH1E/92G1UH)				
	FACTORY CONNECTED SPEED TAPS				
UNIT	COOL	HEAT	FAN	PARK	PARK
030B12	BLACK	YELLOW	RED	BROWN	BLUE
045B12	BLACK	YELLOW	RED	BROWN	BLUE
070B12	BLACK	BLUE	RED	BROWN	YELLOW
090C12	BLACK	BROWN	RED	BLUE	YELLOW
090C16	BLACK	BLUE	RED	BROWN	YELLOW
110C16	BLACK	BROWN	RED	BLUE	YELLOW
110C20	BLACK	BLUE	RED	BROWN	YELLOW
BLOWER SPEED SELECTION	HI ←			→ LO	
SPEED TAPS	BLACK	BROWN	BLUE	YELLOW	RED

	JACK/PLUG CHART
J,P48	JACK/PLUG-INDOOR BLOWER-POWER
J,P49	JACK/PLUG-INDOOR BLOWER-SPD TAP
J,P58	JACK/PLUG-BURNER CONTROL
J,P84	JACK/PLUG-COMB AIR INDUCER
J,P135	JACK/PLUG-SECONDARY LIMIT (S)
J,P156	JACK/PLUG-INDUCER/IGNITER
J,P159	JACK/PLUG-IGNITION

NOTE-
IF ANY WIRE IN THIS APPLIANCE IS REPLACED,IT MUST BE REPLACED WITH WIRE OF LIKE SIZE, RATING,INSULATION THICKNESS AND TERMINATION.

1. 'R' REQUIRED ON SOME OUTDOOR UNITS
2. PARK TERMINALS ARE UNPOWERED TERMINALS. ALL UNUSED MOTOR LEADS MUST BE WIRED TO A PARK TERMINAL.
3. DO NOT USE RED (LOW SPEED) MOTOR LEAD FOR HEATING ON 3 TON 070, 4 TON 090 OR 5 TON 110 UNITS. DO NOT USE RED (LOW SPEED) OR YELLOW (MEDIUM LOW SPEED) MOTOR LEAD FOR HEATING ON 3 TON 090, OR 4 TON 110 UNITS RESULTING TEMPERATURE RISE WILL BE OUTSIDE OF RISE RANGE.
4. L13 POWER CHOKE USED ON $\frac{3}{4}$ AND 1 HP ONLY
5. S145 IS USED WITH HONEYWELL GAS VALVE WHEN APPLIED IN LP GAS UNITS
6. USE COPPER CONDUCTORS ONLY.

Figure 67. Typical Wiring Diagram

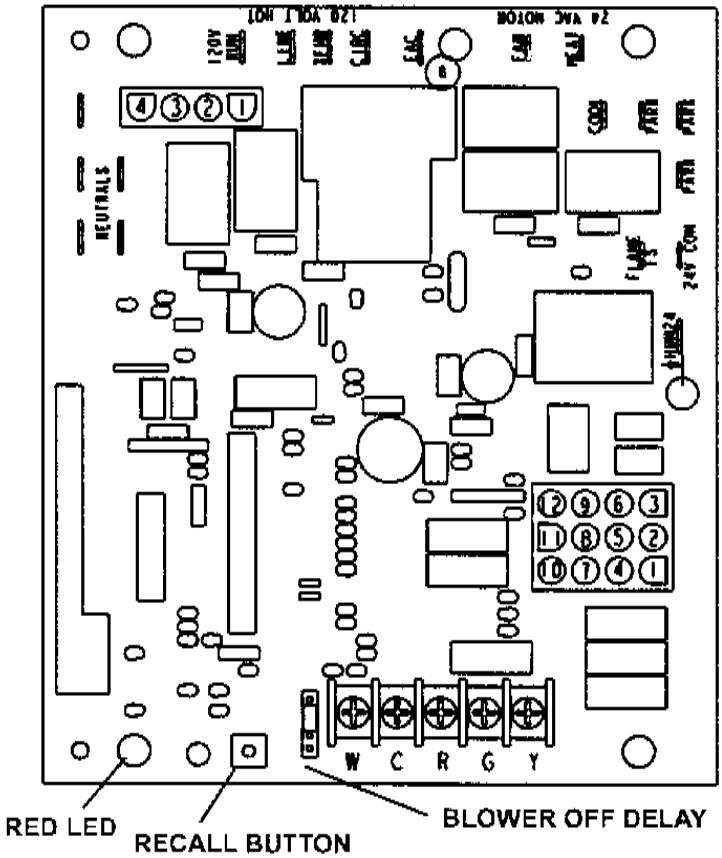

Terminal Designations	
120 HUM	Humidifier (120 VAC)
LINE	Input (120 VAC)
XFMR	Transformer (120 VAC)
CIRC	Indoor Blower (120 VAC)
EAC	Electronic Air Cleaner (120 VAC)
COOL	Blower - Cooling Speed (24 VAC)
HEAT	Blower - Heating Speed (24 VAC)
FAN	Blower - Fan Speed (24 VAC)
PARK	Dead terminals to park all speed taps
NEUTRALS	Neutral Terminals (120 VAC)
FS	Flame Sense
24 COM	Common (24 VAC)
HUM 24	Humidifier (24 VAC)

Figure 68. Integrated Control (Automatic Hot Surface Ignition System)

Unit Start-Up

FOR YOUR SAFETY READ BEFORE OPERATING

⚠ WARNING

Do not use this furnace if any part has been underwater. A flood-damaged furnace is extremely dangerous. Attempts to use the furnace can result in fire or explosion. Immediately call a qualified service technician to inspect the furnace and to replace all gas controls, control system parts, and electrical parts that have been wet or to replace the furnace, if deemed necessary.

⚠ WARNING

Danger of explosion. Can cause injury or product or property damage. Should the gas supply fail to shut off or if overheating occurs, shut off the gas valve to the furnace before shutting off the electrical blower deck, before performing any service procedure.

⚠ CAUTION

Before attempting to perform any service or maintenance, turn the electrical power to unit OFF at disconnect switch.

BEFORE LIGHTING the unit, smell all around the furnace area for gas. Be sure to smell next to the floor because some gas is heavier than air and will settle on the floor.

The gas valve on the unit is equipped with a gas control switch (lever). Use only your hand to move switch. Never use tools. If the switch will not move by hand, do not try to repair it. Force or attempted repair may result in a fire or explosion.

Placing the Furnace into Operation

This furnace is equipped with an automatic hot surface ignition system. Do not attempt to manually light burners on this furnace. Each time the thermostat calls for heat, the burners will automatically light. The ignitor does not get hot when there is no call for heat on these units.

Priming Condensate Trap

The condensate trap should be primed with water prior to start-up to ensure proper condensate drainage. Either pour 10 fl. oz. (300 ml) of water into the trap, or follow these steps to prime the trap:

1. Follow the lighting instructions to place the unit into operation.
2. Set the thermostat to initiate a heating demand.
3. Allow the burners to fire for approximately 3 minutes.
4. Adjust the thermostat to deactivate the heating demand.
5. Wait for the combustion air inducer to stop. Set the thermostat to initiate a heating demand and again allow the burners to fire for approximately 3 minutes.
6. Adjust the thermostat to deactivate the heating demand and wait for the combustion air inducer to stop. At this point, the trap should be primed with sufficient water to ensure proper condensate drain operation.

⚠ WARNING

If you do not follow these instructions exactly, a fire or explosion may result causing property damage, personal injury or death.

Gas Valve Operation

See Figure 69

1. **STOP!** Read the safety information at the beginning of this section.
2. Set the thermostat to the lowest setting.
3. Turn OFF all electrical power to the unit.
4. This furnace is equipped with an ignition device which automatically lights the burners. Do not try to light the burners by hand.
5. Remove the upper access panel.
6. Move gas valve switch to OFF. See Figure 69.
7. Wait five minutes to clear out any gas. If you then smell gas, **STOP!** Immediately call your gas supplier from a neighbor's phone. Follow the gas supplier's instructions. If you do not smell gas go to next step.

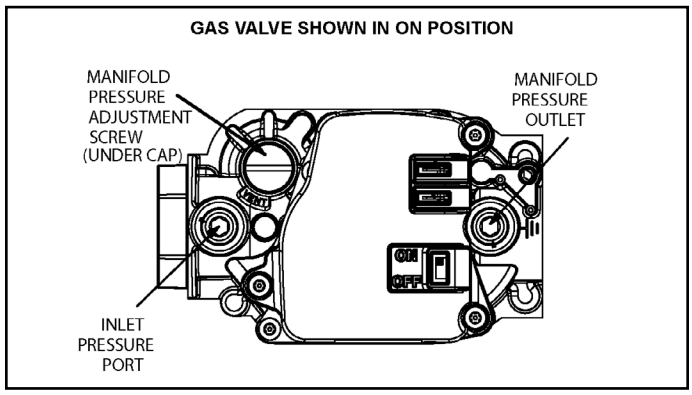

Figure 69.

8. Move gas valve switch to ON. See Figure 69.
9. Replace the upper access panel.
10. Turn on all electrical power to the unit.
11. Set the thermostat to desired setting.

    NOTE: *When unit is initially started, steps 1 through 11 may need to be repeated to purge air from gas line.*

12. If the appliance will not operate, follow the instructions "Turning Off Gas to Unit" and call your service technician or gas supplier.

Turning Off Gas to Unit

1. Set the thermostat to the lowest setting.
2. Turn off all electrical power to the unit if service is to be performed.
3. Remove the upper access panel.
4. Move gas valve switch to OFF.
5. Replace the upper access panel.

Failure To Operate

If the unit fails to operate, check the following:

1. Is the thermostat calling for heat?
2. Are access panels securely in place?
3. Is the main disconnect switch closed?
4. Is there a blown fuse or tripped breaker?
5. Is the filter dirty or plugged? Dirty or plugged filters will cause the limit control to shut the unit off.
6. Is gas turned on at the meter?
7. Is the manual main shut–off valve open?
8. Is the internal manual shut–off valve open?
9. Is the unit ignition system in lockout? If the unit locks out again, inspect the unit for blockages.

Heating Sequence of Operation

1. When thermostat calls for heat, combustion air inducer starts.
2. Combustion air pressure switch proves blower operation. Switch is factory set and requires no adjustment.
3. After a 15 second pre-purge, the hot surface ignitor energizes.
4. After a 20 second ignitor warm-up period, the gas valve solenoid opens. A 4-second "Trial for Ignition" period begins.
5. Gas is ignited, flame sensor proves the flame, and the combustion process continues.
6. If flame is not detected after first ignition trial, the ignition control will repeat steps 3 and 4 four more times before locking out the gas valve. The ignition control will then automatically repeat steps 1 through 6 after 60 minutes. To interrupt the 60 minute period, move thermostat from "Heat" to "OFF" then back to "Heat". Heating sequence then restarts at step 1.

Gas Pressure Adjustment

Gas Flow (Approximate)

Capacity	Seconds for One Revolution			
	Natural		LP	
	1 cu ft Dial	2 cu ft Dial	1 cu ft Dial	2 cu ft Dial
-030	120	240	300	600
-045	80	160	200	400
-070	55	110	136	272
-090	41	82	102	204
-110	33	66	82	164
Natural - 1000 btu/cu ft			LP - 2500 btu/cu ft	

Table 10. Gas Meter Clocking Chart

Furnace should operate at least 5 minutes before checking gas flow. Determine time in seconds for two revolutions of gas through the meter. (Two revolutions assures a more accurate time.) Divide by two and compare to time in Table 10. If manifold pressure matches Table 12 and rate is incorrect, check gas orifices for proper size and restriction. Remove temporary gas meter if installed.

NOTE: *To obtain accurate reading, shut off all other gas appliances connected to meter.*

Supply Pressure Measurement

When testing supply gas pressure, use the 1/8" N.P.T. plugged tap or pressure post located on the gas valve to facilitate test gauge connection. See Figure 69. Check gas line pressure with unit firing at maximum rate. Low pressure may result in erratic operation or underfire. High pressure can result in permanent damage to gas valve or overfire.

On multiple unit installations, each unit should be checked separately, with and without other units operating. Supply pressure must fall within range listed in Table 12.

Manifold Pressure Measurement

1. Remove the threaded plug from the outlet side of the gas valve and install a field provided barbed fitting. Connect to a manometer to measure manifold pressure.
2. Start unit and allow 5 minutes for unit to reach steady state.
3. While waiting for the unit to stabilize, observe the flame. Flame should be stable and should not lift from burner. Natural gas should burn blue.
4. After allowing unit to stabilize for 5 minutes, record manifold pressure and compare to value given in Table 12.

   NOTE: *Shut unit off and remove manometer as soon as an accurate reading has been obtained. Take care to remove barbed fitting and replace threaded plug.*

Proper Combustion

Furnace should operate minimum 15 minutes with correct manifold pressure and gas flow rate before checking combustion. Take combustion sample beyond the flue outlet and compare to the tables below.

Capacity	CO_2% for Nat	CO_2% for L.P.
030	6.5 - 7.5	7.5 - 8.5
045, 070, 090, 110	7 - 9	8 - 10
The maximum carbon monoxide reading should not exceed 100 ppm.		

Table 11.

High Altitude Information

NOTE: *In Canada, certification for installations at elevations over 4500 feet (1371 m) is the jurisdiction of local authorities.*

Units may be installed at altitudes up to 10,000 ft. above sea level. See Table 11 for derate manifold values. Units installed at altitude of 7501 - 10,000 feet require an orifice change. Units installed at altitudes of 4,501 - 10,000 feet (1371 -3048 m) may require a pressure switch change which can be ordered separately.

Table 13 lists required pressure switch changes and orifice conversion kits at varying altitudes.

The combustion air pressure switches are factory set and require no adjustment.

Manifold and Supply Line Pressure 0 - 10,000 ft.

Capacity	Gas	Manifold Pressure in. w.g.					Supply Line Pressure in. w.g. 0 - 10,000 ft.	
		0 - 4,500 ft.	4,501 - 5,500 ft.	5,501 - 6,500 ft.	6,501 - 7,500 ft.	7,501 - 10,000 ft.		
All	Natural	3.5	3.3	3.2	3.1	3.5	4.5	13.0
	LP / Propane	10.	9.4	9.1	8.9	10.0	11.0	13.0
NOTE: A natural to LP propane gas changeover kit is necessary to convert this unit. Refer to the changeover kit installation instruction for the conversion procedure.								

Table 12.

Burner Orifice Conversion Kits at Varying Altitudes

Capacity	0 - 7,500 ft (0 - 2,286 m)		7,501 - 10,000 ft (2,286 - 3,048 m)	
	Natural to LP/ Propane	LP/Propane to Natural	High Altitude Natural Burner Orifice Kit	High Altitude LP/Propane Burner Orifice Kit
030	17H62+	N/A	N/A	17H90
045	11K50+	73W80*	51W01	11K45+
070				
090				
110				

* Conversion requires installation of a gas valve regulator spring which is provided with the gas conversion Kit.

\+ LP Kits include low line pressure switch.

A93 and 92G1 Pressure Switch Requirements at Varying Altitudes

Capacity	0 - 4500 ft (0 - 1371m)	4501 - 7500 ft (1371 - 2286m)	7501 - 10000 ft (2286 - 3048m)
030	No Change	11U65	11U66
045			
070			
090			
110			

Pressure switch is factory set. No adjustment necessary. All models use the factory-installed pressure switch from 0-4500 feet (0-1371 m).

Table 13.

Testing for Proper Venting and Sufficient Combustion Air for Non-Direct Vent Applications

⚠ WARNING

CARBON MONOXIDE POISONING HAZARD

Failure to follow the steps outlined below for each appliance connected to the venting system being placed into operation could result in carbon monoxide poisoning or death.

The following steps shall be followed for each appliance connected to the venting system being placed into operation, while all other appliances connected to the venting system are not in operation.

After the gas furnace has been started, the following test should be conducted to ensure proper venting and sufficient combustion air has been provided to the unit as well as to other gas–fired appliances which are separately vented.

If this furnace replaces a Category I furnace which was commonly vented with another gas appliance, the size of the existing vent pipe for that gas appliance must be checked. Without the heat of the original furnace flue products, the existing vent pipe is probably oversized for the single water heater or other appliance. The vent should be checked for proper draw with the remaining appliance.

The test should be conducted while all appliances (both in operation and those not in operation) are connected to the venting system being tested. If the venting system has been installed improperly, or if provisions have not been made for sufficient amounts of combustion air, corrections must be made as outlined in the previous section.

1. Seal any unused openings in the venting system.
2. Visually inspect the venting system for proper size and horizontal pitch. Determine there is no blockage or restriction, leakage, corrosion, or other deficiencies which could cause an unsafe condition.
3. To the extent that it is practical, close all building doors and windows and all doors between the space in which the appliances connected to the venting system are located and other spaces of the building.
4. Close fireplace dampers.
5. Turn on clothes dryers and any appliances not connected to the venting system. Turn on any exhaust fans, such as range hoods and bathroom exhausts, so they will operate at maximum speed. Do not operate a summer exhaust fan.
6. Follow the lighting instruction to place the appliance being inspected into operation. Adjust thermostat so appliance will operate continuously.
7. Use the flame of match or candle to test for spillage of flue gases at the draft hood relief opening after 5 minutes of main burner operation.
8. If improper venting is observed during any of the above tests, the venting system must be corrected or sufficient combustion/makeup air must be provided. The venting system should be re–sized to approach the minimum size as determined by using the appropriate tables in appendix G in the current standards of the National Fuel Gas Code ANSI-Z223.1/NPFA 54 in the U.S.A., and the appropriate Natural Gas and Propane appliances venting sizing tables in the current standard of the CSA-B149 Natural Gas and Propane Installation Codes in Canada.
9. After determining that each appliance remaining connected to the common venting system properly vents when tested as indicated in step 3, return doors, windows, exhaust fans, fireplace dampers and any other gas burning appliance to their previous condition of use.

Other Unit Adjustments

Primary Limit

The primary limit is located on the heating compartment vestibule panel. This limit is factory set and requires no adjustment.

Flame Rollout Switches (Two)

These manually reset switches are located on the front of the burner box. These limits are factory set and require no adjustment.

Pressure Switch

The pressure switch is located in the heating compartment on the cold end header box. This switch checks for proper combustion air inducer operation before allowing ignition trial. The switch is factory set and must not be adjusted.

Temperature Rise

After the furnace has been started and supply and return air temperatures have been allowed to stabilize, check the temperature rise. If necessary, adjust the blower

speed to maintain the temperature rise within the range shown on the unit nameplate. See Table 14 for allowable heating speeds. Increase the blower speed to decrease the temperature. Decrease the blower speed to increase the temperature rise. Failure to adjust the temperature rise may cause erratic limit operation.

Fan Control

The fan ON time of 30 seconds is not adjustable. The fan OFF delay (amount of time that the blower operates after the heat demand has been satisfied) may be adjusted by changing the jumper position across the five pins on the integrated control. The unit is shipped with a factory heat fan OFF setting of 120 seconds. The fan OFF delay affects comfort and is adjustable to satisfy individual applications. Adjust the fan OFF delay to achieve a supply air temperature between 90° and 110° F at the moment that the blower is de-energized. Longer OFF delay settings provide lower return air temperatures; shorter settings provide higher return air temperatures. See Figure 70.

HEAT FAN-OFF TIME IN SECONDS

JUMPER POSITION		HEAT OFF DELAY
PIN1	PIN2	60
PIN2	PIN3	90
PIN3	PIN4	120
PIN4	PIN5	180
NO JUMPER		180

To adjust fan–off timing, reposition jumper across pins to achieve desired setting.

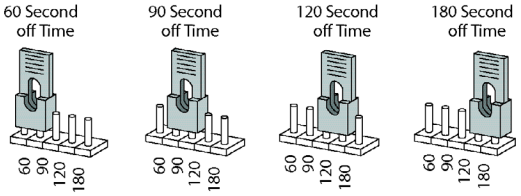

Figure 70.

Thermostat Heat Anticipation

Set the heat anticipator setting (if adjustable) according to the amp draw listed on the wiring diagram that is attached to the unit.

Electrical

1. Check all wiring for loose connections.
2. Check for the correct voltage at the furnace (with furnace operating). Correct voltage is 120 VAC ± 10%
3. Check amp–draw on the blower motor with the blower access panel in place.

   Motor Nameplate_____Actual_____

Blower Speeds

Follow the steps below to change the blower speeds.

1. Turn off electrical power to furnace.
2. Remove blower access panel.
3. Disconnect existing speed tap at control board speed terminal.

   NOTE: *Termination of any unused motor leads must be insulated.*
4. Place unused blower speed tap on integrated control “PARK” terminal or insulate.
5. Refer to blower speed selection chart on unit wiring diagram for desired heating or cooling speed. See Blower performance data beginning on the next page. See Table 14 for allowable heating speeds.
6. Connect selected speed tap at control board speed terminal.
7. Re-secure blower access panel.
8. Turn on electrical power to furnace.
9. Recheck temperature rise.

Electronic Ignition

The integrated control has an added feature of an internal Watchguard control. The feature serves as an automatic reset device for integrated control lockout caused by ignition failure. This type of lockout is usually due to low gas line pressure. After one hour of continuous thermostat demand for heat, the Watchguard will break and remake thermostat demand to the furnace and automatically reset the integrated control to begin the ignition sequence.

Exhaust and Air Intake Pipe

1. Check exhaust and air intake connections for tightness and to make sure there is no blockage.
2. Is pressure switch closed? Obstructed exhaust pipe will cause unit to shut off at pressure switch. Check termination for blockages.
3. Obstructed pipe or termination may cause rollout switches to open. Reset manual flame rollout switches on burner box assembly if necessary.

Blower Performance A93UH1E & 92G1UHE

A93UH1E030B12A / 92G1UH030BE12 Performance (Less Filter)

External Static Pressure in. w.c.	Air Volume / Watts at Various Blower Speeds									
	High		Medium-High		Medium		Medium-Low		Low	
	cfm	Watts	cfm	Watts	cfm	Watts	cfm	Watts	cfm	Watts
0.10	1400	351	1130	199	955	132	735	71	635	48
0.20	1360	358	1085	207	905	137	680	81	515	50
0.30	1325	370	1055	217	865	148	625	84	445	55
0.40	1300	382	1020	227	815	157	570	91	380	61
0.50	1265	387	990	231	785	161	515	95	310	66
0.60	1235	402	945	244	735	168	475	104	265	68
0.70	1200	411	910	253	710	175	425	107	215	72
0.80	1160	420	885	260	660	183	355	114	175	75

A93UH1E045B12A / 92G1UH045BE12 Performance (Less Filter)

External Static Pressure in. w.c.	Air Volume / Watts at Various Blower Speeds									
	High		Medium-High		Medium		Medium-Low		Low	
	cfm	Watts	cfm	Watts	cfm	Watts	cfm	Watts	cfm	Watts
0.10	1390	348	1270	271	1135	199	885	109	735	71
0.20	1355	349	1230	280	1100	207	850	119	680	81
0.30	1330	368	1205	291	1060	220	795	126	625	84
0.40	1295	378	1180	298	1025	226	755	134	570	91
0.50	1265	386	1140	310	995	233	720	140	515	95
0.60	1240	402	1100	316	955	242	670	148	475	104
0.70	1210	411	1065	331	920	253	615	157	425	107
0.80	1160	420	1030	340	880	262	580	160	355	114

A93UH1E070B12A / 92G1UH070BE12 Performance (Less Filter)

External Static Pressure in. w.c.	Air Volume / Watts at Various Blower Speeds									
	High		Medium-High		Medium		Medium-Low		Low	
	cfm	Watts	cfm	Watts	cfm	Watts	cfm	Watts	cfm	Watts
0.10	1395	337	1270	256	1145	192	910	107	705	71
0.20	1365	344	1245	269	1100	199	865	115	655	76
0.30	1340	357	1215	275	1080	210	815	123	600	82
0.40	1305	367	1180	285	1040	219	760	133	550	93
0.50	1270	377	1145	296	1005	230	720	139	505	95
0.60	1250	393	1110	305	970	237	685	147	455	100
0.70	1210	401	1080	316	930	247	635	152	405	109
0.80	1185	412	1045	325	885	255	600	158	355	114

NOTE: All air is measured external to unit without filter (filter not furnished - field provided)

A93UH1E090C12A / 92G1UH090CE12 Performance (Less Filter)

External Static Pressure in. w.c.	Air Volume / Watts at Various Blower Speeds									
	High		Medium-High		Medium		Medium-Low		Low	
	cfm	Watts	cfm	Watts	cfm	Watts	cfm	Watts	cfm	Watts
0.10	1375	289	1315	239	1125	168	885	95	730	70
0.20	1340	301	1285	249	1090	175	840	104	685	74
0.30	1310	314	1260	261	1055	180	780	112	645	81
0.40	1275	326	1225	269	1015	195	730	117	590	87
0.50	1240	340	1190	279	965	201	675	126	535	91
0.60	1210	347	1160	288	920	211	620	133	495	98
0.70	1170	362	1130	299	885	221	580	138	455	102
0.80	1135	368	1105	304	855	229	535	144	405	107

A93UH1E090C16A / 92G1UH090CE16 Performance (Less Filter)

External Static Pressure in. w.c.	Air Volume / Watts at Various Blower Speeds									
	High		Medium-High		Medium		Medium-Low		Low	
	cfm	Watts	cfm	Watts	cfm	Watts	cfm	Watts	cfm	Watts
0.10	1675	381	1475	263	1365	206	1275	173	1160	135
0.20	1655	392	1460	273	1315	219	1230	185	1110	142
0.30	1615	408	1410	282	1290	225	1195	192	1065	151
0.40	1595	416	1365	295	1245	236	1155	203	1010	160
0.50	1560	429	1335	308	1200	246	1105	214	965	167
0.60	1525	439	1295	315	1160	255	1060	221	915	176
0.70	1490	453	1260	325	1105	268	1015	229	875	184
0.80	1445	464	1230	332	1085	275	980	240	830	195

A93UH1E110C16A / 92G1UH110CE16 Performance (Less Filter)

External Static Pressure in. w.c.	Air Volume / Watts at Various Blower Speeds									
	High		Medium-High		Medium		Medium-Low		Low	
	cfm	Watts	cfm	Watts	cfm	Watts	cfm	Watts	cfm	Watts
0.10	1715	380	1495	262	1380	208	1295	176	1175	135
0.20	1680	391	1470	272	1355	220	1255	184	1135	145
0.30	1640	405	1425	284	1300	230	1220	194	1085	154
0.40	1615	418	1395	196	1260	239	1170	206	1025	162
0.50	1580	433	1345	305	1225	249	1130	212	975	170
0.60	1540	445	1315	315	1180	258	1080	223	935	179
0.70	1515	450	1285	325	1135	268	1035	230	895	186
0.80	1470	467	1230	334	1095	278	995	240	850	192

NOTE: All air is measured external to unit without filter (filter not furnished - field provided)

A93UH1E110C20A / 92G1UH110CE20 Performance (Less Filter)

External Static Pressure in. w.c.	Air Volume / Watts at Various Blower Speeds																			
	Bottom Return Air, Side Return Air with Optional Return Air Base, Return Air from Both Sides or Return Air from Bottom and One Side.										Single Side Return Air - Air volumes in **bold** require field fabricated transition to accommodate 20 x 25 x 1 in. air filter in order to maintain proper air velocity.									
	High		Medium-High		Medium		Medium-Low		Low		High		Medium-High		Medium		Medium-Low		Low	
	cfm	Watts	cfm	Watts	cfm	Watts	cfm	Watts	cfm	Watts	cfm	Watts	cfm	Watts	cfm	Watts	cfm	Watts	cfm	Watts
0.10	2120	633	1880	441	1715	353	1605	288	1435	210	2135	614	1885	421	1705	342	1595	280	1415	207
0.20	2085	648	1830	455	1665	362	1560	298	1360	220	2085	628	1830	437	1670	351	1545	293	1370	218
0.30	2040	663	1795	468	1630	374	1515	317	1325	229	2035	647	1790	451	1625	364	1500	308	1315	227
0.40	2005	675	1760	482	1585	386	1470	327	1270	244	1995	657	1755	469	1590	378	1460	319	1275	240
0.50	1965	688	1710	496	1540	399	1425	336	1230	251	1985	674	1725	478	1545	391	1410	329	1225	250
0.60	1935	705	1680	507	1510	408	1390	347	1180	263	1925	687	1675	494	1495	401	1375	343	1170	257
0.70	1885	715	1635	521	1485	425	1345	359	1140	271	1900	698	1635	506	1450	413	1330	351	1125	270
0.80	1855	735	1600	534	1440	426	1305	367	1085	279	1850	711	1605	520	1415	430	1285	363	1075	281

NOTE: All air is measured external to unit without filter (filter not furnished - field provided)

Allowable Heating Speeds					
Model	**Red**	**Yellow**	**Blue**	**Brown**	**Black**
030-12	Allowed	Factory Setting	Allowed	Allowed	Not Allowed
045-12	Allowed	Factory Setting	Allowed	Allowed	Not Allowed
070-12	Not Allowed	Allowed	Factory Setting	Allowed	Not Allowed
090-12	Not Allowed	Not Allowed	Allowed	Factory Setting	Not Allowed
090-16	Not Allowed	Allowed	Factory Setting	Allowed	Not Allowed
110-16	Not Allowed	Not Allowed	Allowed	Factory Setting	Allowed
110-20	Not Allowed	Allowed	Factory Setting	Allowed	Not Allowed

Table 14.

Allowable Circulation Speeds					
Model	**Red**	**Yellow**	**Blue**	**Brown**	**Black**
All Models	Factory Setting	Not Allowed	Not Allowed	Not Allowed	Not Allowed

Table 15.

Service

⚠ WARNING

ELECTRICAL SHOCK, FIRE, OR EXPLOSION HAZARD.

Failure to follow safety warnings exactly could result in dangerous operation, serious injury, death or property damage.

Improper servicing could result in dangerous operation, serious injury, death, or property damage.

Before servicing, disconnect all electrical power to furnace.

When servicing controls, label all wires prior to disconnecting. Take care to reconnect wires correctly. Verify proper operation after servicing.

At the beginning of each heating season, system should be checked as follows by a qualified service technician:

Blower

Check the blower wheel for debris and clean if necessary. The blower motors are pre-lubricated for extended bearing life. No further lubrication is needed.

⚠ WARNING

The blower access panel must be securely in place when the blower and burners are operating. Gas fumes, which could contain carbon monoxide, can be drawn into living space resulting in personal injury or death.

Filters

All air filters are installed external to the unit. Filters should be inspected monthly. Clean or replace the filters when necessary to ensure proper furnace operation. Table 1 lists recommended filter sizes.

Exhaust and Air Intake Pipes

Check the exhaust and air intake pipes and all connections for tightness and to make sure there is no blockage.

NOTE: *After any heavy snow, ice or frozen fog event the furnace vent pipes may become restricted. Always check the vent system and remove any snow or ice that may be obstructing the plastic intake or exhaust pipes.*

Electrical

1. Check all wiring for loose connections.
2. Check for the correct voltage at the furnace (with furnace operating). Correct voltage is 120 VAC ± 10%.
3. Check amp-draw on the blower motor with the blower access panel in place.

   Motor Nameplate_____Actual_____

Winterizing and Condensate Trap Care

1. Turn off power to the furnace.
2. Have a shallow pan ready to empty condensate water.
3. Remove the clean out cap from the condensate trap and empty water. Inspect the trap then reinstall the clean out cap.

Cleaning Heat Exchanger

If cleaning the heat exchanger becomes necessary, follow the below procedures and refer to Figure 1 when disassembling unit. Use papers or protective covering in front of furnace while removing heat exchanger assembly.

1. Turn off electrical and gas supplies to the furnace.
2. Remove the burner access panel.
3. Mark all gas valve wires and disconnect them from valve.
4. Remove gas supply line connected to gas valve.
5. Remove sensor wire from flame sensor. Disconnect 2–pin plug from the ignitor.
6. Disconnect wires from flame rollout switches.
7. Remove four burner assembly screws at the vestibule panel and remove gas valve /manifold and burner box as a single unit.
8. If necessary, clean burners at this time. Follow procedures outlined in Burner Cleaning section.
9. Remove the clean-out cap on trap and drain. Replace cap.
10. Disconnect condensate drain line from the condensate trap. Remove condensate trap (it may be necessary to cut drain pipe). Remove the 1/2” NPT fitting from the cold end header box. Disconnect drain tubes from cold end header collector box.
11. Disconnect condensate drain tubes from flue collar. Remove screws that secures flue collar in place. Remove flue collar. It may be necessary to cut the exiting exhaust pipe for removal of the fitting.
12. Loosen two clamps from flexible no-hub exhaust collar.
13. Disconnect the 2–pin plug from the combustion air inducer. Remove screws which secure combustion air inducer to collector box. Remove combustion air inducer assembly. Remove ground wire.
14. Mark and disconnect all combustion air pressure tubing from cold end header collector box.
15. Mark and remove wires from pressure switch. Remove pressure switch. Keep tubing attached to pressure switch.
16. Remove electrical junction box from the side of the furnace.
17. Remove blower access panel.
18. Mark and disconnect any remaining wiring to heating compartment components. Disengage strain relief bushing and pull wiring and bushing through the hole in the blower deck.
19. Remove the primary limit from the vestibule panel.
20. Remove top cap screws to allow top cap to be tilted upward to allow clearance for removing heat exchanger.
21. Remove two screws from the front cabinet flange at the blower deck. Spread cabinet sides slightly to allow clearance for removal of heat exchanger.
22. Remove screws along vestibule sides and bottom which secure vestibule panel and heat exchanger assembly to cabinet. Remove two screws from blower rails which secure bottom heat exchanger flange. Remove heat exchanger from furnace cabinet.
23. Back wash heat exchanger with soapy water solution or steam. If steam is used it must be below 275°F (135°C).
24. Thoroughly rinse and drain the heat exchanger. Soap solutions can be corrosive. Take care to rinse entire assembly.
25. Reinstall heat exchanger into cabinet making sure that the rear baffle of the heat exchanger assembly is nested under the support located at the rear of the cabinet. Remove the indoor blower to view this area through the blower opening.
26. Re–secure the supporting screws along the vestibule sides.
27. Reinstall blower assembly and reinstall two screws through rails.
28. Reinstall cabinet screws on front flange at blower deck.
29. Reinstall screws securing top cap.
30. Reinstall the primary limit on the vestibule panel.
31. Route heating component wiring through hole in blower deck and reinsert strain relief bushing.
32. Reinstall pressure switch and reconnect pressure switch wiring.
33. Carefully connect combustion air pressure switch hosing from pressure switch to proper stubs on cold end header collector box.
34. Reinstall 1/2” NPT (if removed) in the cold end header box. Reconnect drain tubing to collector box.
35. Reinstall condensate trap pipe. Reconnect condensate drain line to the condensate trap.
36. Reinstall electrical junction box.
37. Reinstall the combustion air inducer and flexible no hub connector. Reconnect the 2 pin plug to the wire harness.
38. Reconnect drain tubes between flue collar and cold end header box.
39. Secure burner assembly to vestibule panel using four existing screws. Burners are self aligning to center of clam shells.
40. Reconnect gas supply line to gas valve.
41. Reconnect flame rollout switch wires.
42. Reconnect sensor wire and reconnect 2 pin plug from ignitor.

43. Reconnect wires to gas valve.
44. Replace the blower compartment access panel.
45. Refer to instruction on verifying gas and electrical connections when reestablishing supplies.
46. Follow lighting instructions to light and operate furnace for 5 minutes to ensure that heat exchanger is clean and dry and that furnace is operating properly.
47. Replace heating compartment access panel.

Cleaning the Burner Assembly

1. Turn off gas and electrical power to the furnace. Remove heating compartment access panel.
2. Disconnect the gas supply line from the gas valve.
3. Disconnect and label wires from gas valve.
4. Disconnect ignitor wiring at 2 circuit plug.
5. Disconnect and label wires from rollout switch.
6. Disconnect and label flame sensor wire.
7. Disconnect and label ground wire from burner/manifold assembly.
8. Remove four screws that secures burner/manifold assembly to vestibule. Remove the assembly and make note not to allow ignitor plate to dislodge from the assembly.
9. Gently clean the face of the burners using the soft brush attachment on a vacuum cleaner. Visually inspect the inside of the burners and crossovers for any blockage caused by foreign matter. Remove any blockage.
10. Reinstall the burner/manifold assembly using the existing four screws. Burners are self aligning to center of clam shells.
11. Reconnect ground wire.
12. Reconnect flame sensor wire.
13. Reconnect rollout switch wires.
14. Reconnect ignitor wires.
15. Reconnect gas valve wires.
16. Reconnect gas supply line to gas valve.
17. Refer to instructions on verifying gas and electrical connections when re-establishing supplies.
18. Follow instructions to place furnace in operation. Run furnace 5 minutes to ensure burners are clean and operating correctly.
19. Replace heating compartment access panel.

Integrated Control LED Codes	
Red LED Flash Code[2]	**Diagnostic Codes / Status of Furnace**
LED Off	No power to control or control hardware fault detected
Heartbeat[1]	Normal operation - idle, continuous fan, cool
Continuous Rapid Flash	Call for heat / burner operation
1 Flash	Reverse line voltage polarity
2 Flashes	Improper earth ground
3 Flashes	Burner failed to light, or lost flame during heat demand
4 Flashes	Low flame signal - check flame sensor
5 Flashes	Watchguard - burner failed to light, exceeded maximum number of retries or recycles
6 Flashes	Not used
7 Flashes	Primary or Secondary limit open or watchguard mode - limit switch open longer than 3 minutes
8 Flashes	Rollout switch open
9 Flashes	Pressure switch failed to close or opened during heat demand
10 Flashes	Watchguard - Pressure switch opened 5 times during one heat demand
11 Flashes	Pressure switch stuck closed prior to activation of combustion air inducer
12 Flashes	Flame sensed without gas valve energized
13 Flashes	Low line voltage

[1] A “heartbeat” is indicated by a “slow flash” - 1 sec on 1 sec off, repeating

[2] Error codes are indicated by a “rapid flash” - the LED flashes X times at 1/2 sec on, 1/2 sec off, remains off for 3 sec, then repeats

NOTE: Last 10 error codes are stored in memory, including when power is shut off to the unit. To recall, press and release button. Most recent will be displayed first, LED off for 3 sec, then next error code is displayed, etc. To clear error codes, depress and hold button longer than 5 seconds.

Table 16. Control Diagnostic Codes

Planned Service

A service technician should check the following items during an annual inspection. Power to the unit must be shut off for safety.

Fresh air grilles and louvers (on the unit and in the room where the furnace is installed) - Must be open and unobstructed to provide combustion air.

Burners - Must be inspected for rust, dirt, or signs of water.

Vent pipe - Must be inspected for signs of water, cracked, damaged or sagging pipe, or disconnected joints.

Unit appearance - Must be inspected for rust, dirt, signs of water, burnt or damaged wires, or components.

Blower access door - Must be properly in place and provide a seal between the return air and the room where the furnace is installed.

Return air duct - Must be properly attached and provide an air seal to the unit.

Operating performance - Unit must be observed during operation to monitor proper performance of the unit and the vent system.

Combustion gases - Flue products should be analyzed and compared to the unit specifications.

Problems detected during the inspection may make it necessary to temporarily shut down the furnace until the items can be repaired or replaced.

Instruct the homeowners to pay attention to their furnace. Situations can arise between annual furnace inspections that may result in unsafe operation. For instance, items innocently stored next to the furnace may obstruct the combustion air supply. This could cause incomplete combustion and the production of carbon monoxide gas.

Repair Parts List

The following repair parts are available through Allied Air dealers. When ordering parts, include the complete furnace model number listed on the CSA nameplate. All service must be performed by a licensed professional installer (or equivalent), service agency, or gas supplier.

Cabinet Parts
- Upper Access Panel
- Blower Access Panel
- Top Cap

Control Panel Parts
- Transformer
- Integrated Control Board
- Door Interlock Switch

Blower Parts
- Blower Wheel
- Motor
- Motor Mounting Frame
- Motor Capacitor
- Blower Housing Cutoff Plate

Heating Parts
- Flame Sensor
- Heat Exchanger Assembly
- Gas Manifold
- Combustion Air Inducer
- Gas Valve
- Main Burner Cluster
- Main Burner Orifices
- Pressure Switch
- Ignitor
- Primary Limit Control
- Flame Rollout Switches

Requirements for Commonwealth of Massachusetts

Modifications to NFPA-54, Chapter 10

Revise NFPA-54 section 10.8.3 to add the following requirements:
For all side wall, horizontally vented, gas-fueled equipment installed in every dwelling, building or structure used in whole or in part for residential purposes, including those owned or operated by the Commonwealth and where the side wall exhaust vent termination is less than seven (7) feet above the finished grade in the area of the venting, including but not limited to decks and porches, the following requirements shall be satisfied:

1. **INSTALLATION OF CARBON MONOXIDE DETECTORS**. At the time of installation of the side wall, horizontally vented, gas-fueled equipment, the installing plumber or gas fitter shall observe that a hard-wired carbon monoxide detector with an alarm and battery backup is installed on the floor level where the gas equipment is to be installed. In addition, the installing plumber or gas fitter shall observe that a battery-operated or hard-wired carbon monoxide detector with an alarm is installed on each additional level of the dwelling, building or structure served by the side wall, horizontally vented, gas-fueled equipment. It shall be the responsibility of the property owner to secure the services of qualified licensed professionals for the installation of hard-wired carbon monoxide detectors.
   a. In the event that the side wall, horizontally vented, gas-fueled equipment is installed in a crawl space or an attic, the hard-wired carbon monoxide detector with alarm and battery backup may be installed on the next adjacent floor level.
   b. In the event that the requirements of this subdivision cannot be met at the time of completion of installation, the owner shall have a period of thirty (30) days to comply with the above requirements; provided, however, that during said thirty (30) day period, a battery-operated carbon monoxide detector with an alarm shall be installed.
2. **APPROVED CARBON MONOXIDE DETECTORS.** Each carbon monoxide detector as required in accordance with the above provisions shall comply with NFPA 720 and be ANSI/UL 2034 listed and IAS certified.
3. **SIGNAGE**. A metal or plastic identification plate shall be permanently mounted to the exterior of the building at a minimum height of eight (8) feet above grade directly in line with the exhaust vent terminal for the horizontally vented, gas-fueled heating appliance or equipment. The sign shall read, in print size no less than one-half (1/2) inch in size, "**GAS VENT DIRECTLY BELOW. KEEP CLEAR OF ALL OBSTRUCTIONS.**"
4. **INSPECTION**. The state or local gas inspector of the side wall, horizontally vented, gas-fueled equipment shall not approve the installation unless, upon inspection, the inspector observes carbon monoxide detectors and signage installed in accordance with the provisions of 248 CMR 5.08(2)(a) 1 through 4.

EXEMPTIONS: The following equipment is exempt from 24 CMR 5.08(2)(a) 1 through 4:

1. The equipment listed in Chapter 10 entitled "Equipment Not Required to Be Vented" in the most current edition of NFPA 54 as adopted by the Board; and
2. Product Approved side wall, horizontally vented, gas-fueled equipment installed in a room or structure separate from the dwelling, building or structure used in whole or in part for residential purposes.

MANUFACTURER REQUIREMENTS - GAS EQUIPMENT VENTING SYSTEM PROVIDED.

When the manufacturer of Product Approved side wall, horizontally vented, gas-fueled equipment provides a venting system design or venting system components with the equipment, the instructions provided by the manufacturer for installation of the equipment and the venting system shall include:

1. Detailed instructions for the installation of the venting system design or the venting system components: and
2. A complete parts list for the venting system design or venting system.

MANUFACTURER REQUIREMENTS - GAS EQUIPMENT VENTING SYSTEM NOT PROVIDED.

When the manufacturer of Product Approved sidewall, horizontally vented, gas-fueled equipment does not provide the parts for venting the flue gases, but identifies "special venting systems," the following requirements shall be satisfied by the manufacturer:

1. The referenced "special venting system" instructions shall be included with the appliance or equipment installation instructions; and
2. The "special venting systems" shall be Product Approved by the Board, and the instructions for that system shall include a parts list and detailed installation instructions.

A copy of all installation instructions for all Product Approved side wall, horizontally vented, gas-fueled equipment, all venting instructions, all parts lists for venting instructions, and/or all venting design instructions shall remain with the appliance or equipment at the completion of the installation.