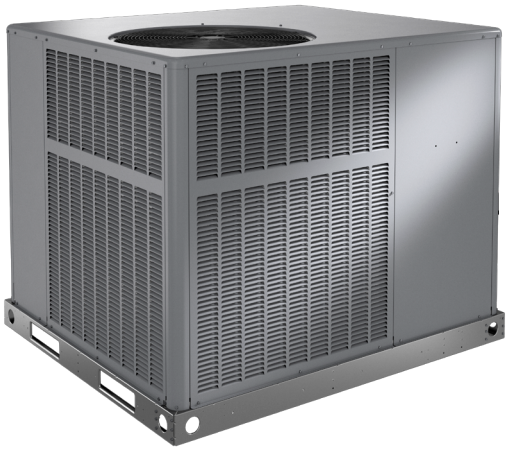

INSTALLATION AND MAINTENANCE INSTRUCTIONS

*RP14AC AND *RP14HP SERIES UNITS

RESIDENTIAL PACKAGED UNITS

Air Conditioners and Heat Pumps
507296-03
12/2020

THIS MANUAL MUST BE LEFT WITH THE HOMEOWNER FOR FUTURE REFERENCE

Table of Contents

Unit Dimensions 2
Roof Curb Dimensions 4
Adjustable Roof Curb Dimensions.....6
Installation 8
Electrical Wiring.....10
Duct System 11
Filters.....11
Condensate Drain.....12
Sequence of Operation.....12
Maintenance.....15
Wiring Diagrams.....18

⚠ WARNING

Installation and servicing of air conditioning equipment can be hazardous due to internal refrigerant pressure and live electrical components. Only trained and qualified service personnel should install or service this equipment. Installation and service performed by unqualified persons can result in property damage, personal injury, or death.

⚠ WARNING

For your safety, do not store or use gasoline or other flammable vapors and liquids in the vicinity of this or any other appliance. Such actions could result in property damage, personal injury, or death.

⚠ WARNING

If this unit is to be installed in a mobile or manufactured home application, the duct system must be sized to achieve static pressures within the manufacturer's guidelines. All other installation guidelines must also be followed. Failure to do so may result in equipment damage, personal injury, and improper performance of the unit.

INTERTEK ETL CM C US LISTED

215 Metropolitan Drive
West Columbia, SC 29170

(P) 507296-03

⚠ CAUTION

The installation of this appliance must conform to the requirements of the National Fire Protection Association; the National Electrical Code, ANSI/NFPA No. 70 (latest edition) in the United States; the Canadian Electrical Code Part 1, CSA 22.1 (latest edition) in Canada; and any state or provincial laws or local ordinances. Local authorities having jurisdiction should be consulted before installation is made. Such applicable regulations or requirements take precedence over the general instructions in this manual.

Save these instructions for future reference

Unit Dimensions - Small Base Air Conditioners & Heat Pumps

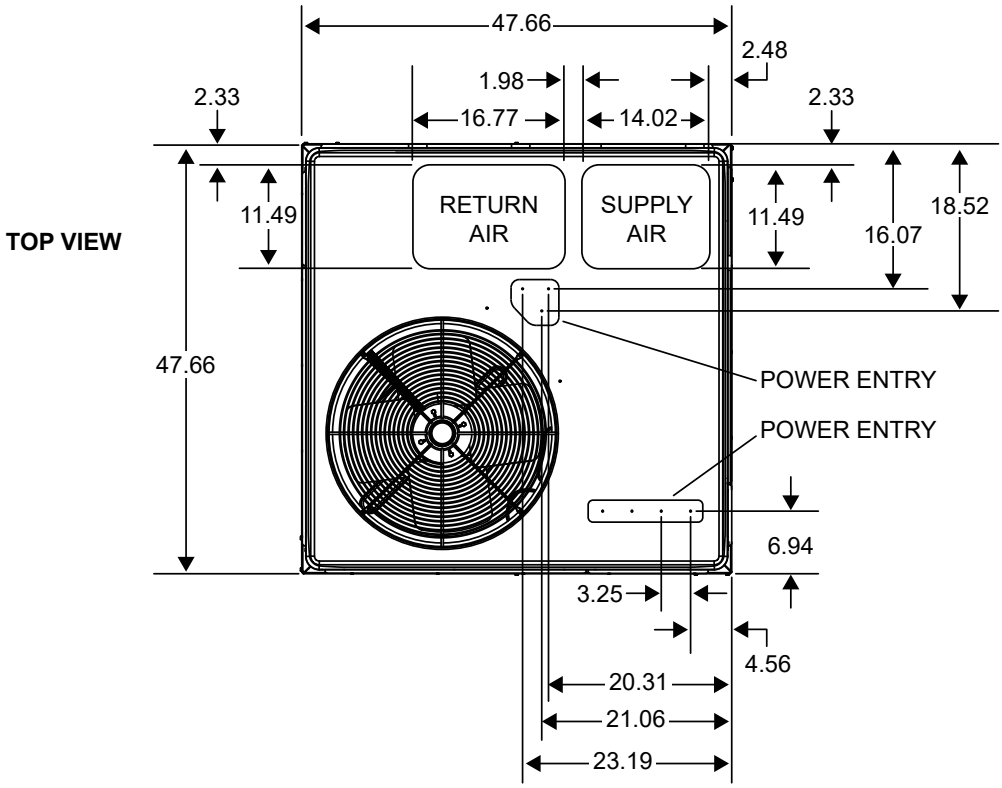

SIDE VIEWS

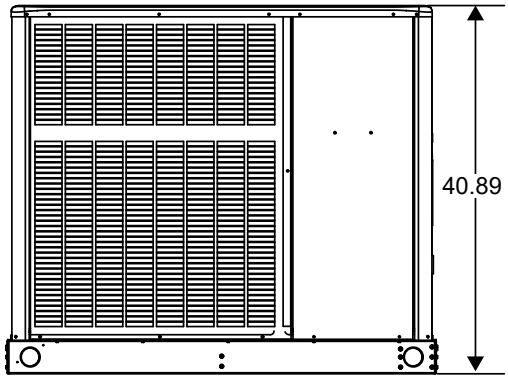

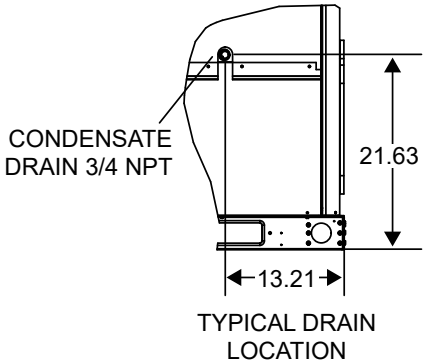

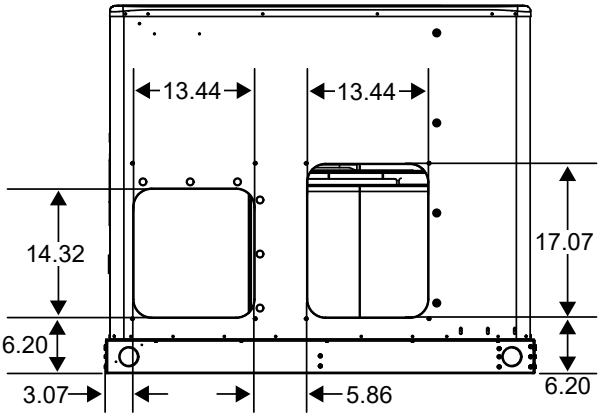

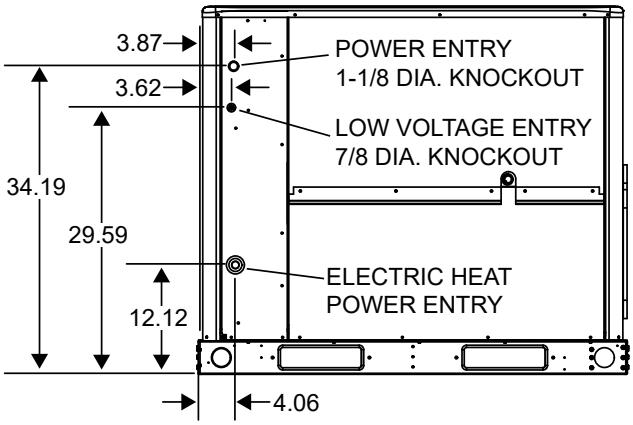

Unit Dimensions - Large Base Air Conditioners & Heat Pumps

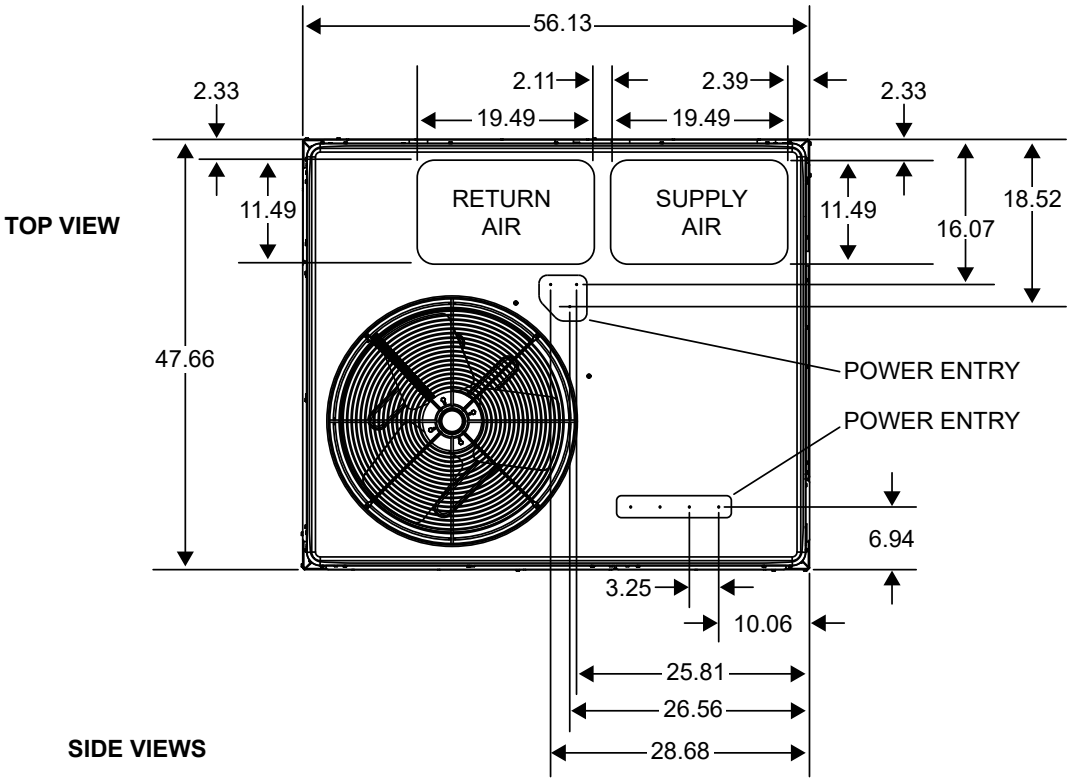

SIDE VIEWS

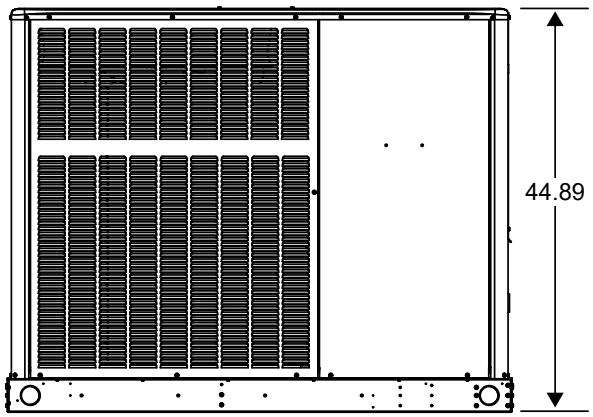

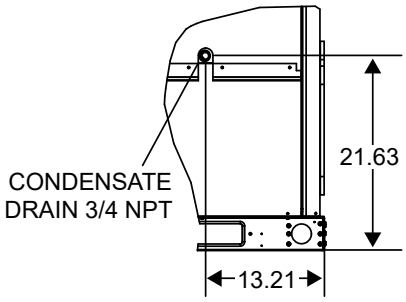

TYPICAL DRAIN LOCATION

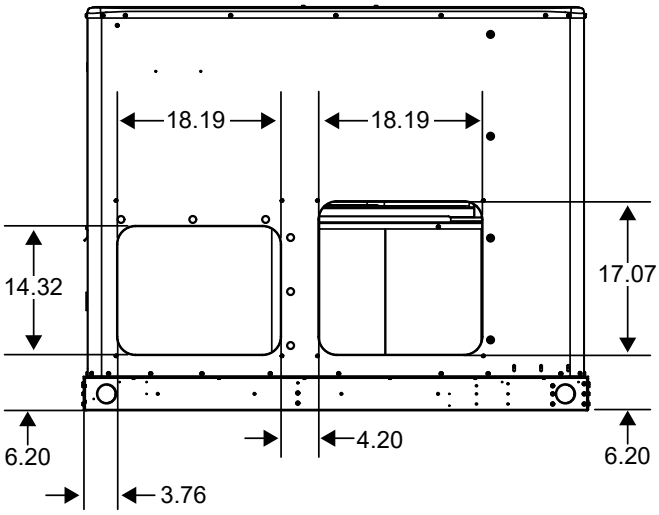

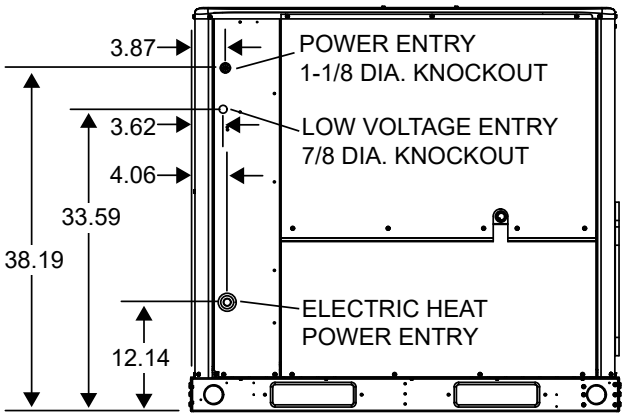

Roof Curb Dimensions - Small Base Air Conditioners & Heat Pumps

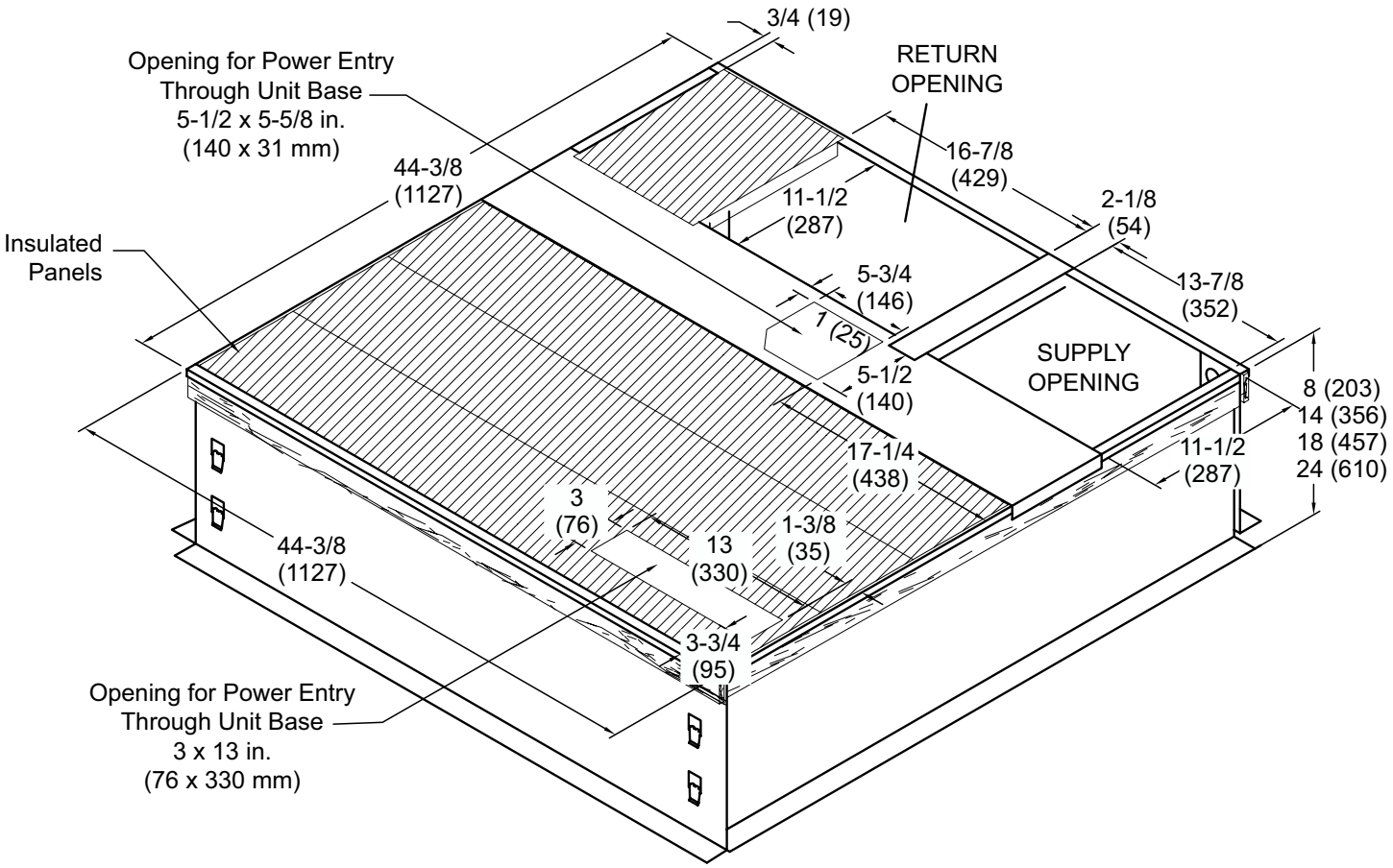

NOTE - Roof deck may be omitted within confines of curb.

Roof Curb Dimensions - Large Base Air Conditioners & Heat Pumps

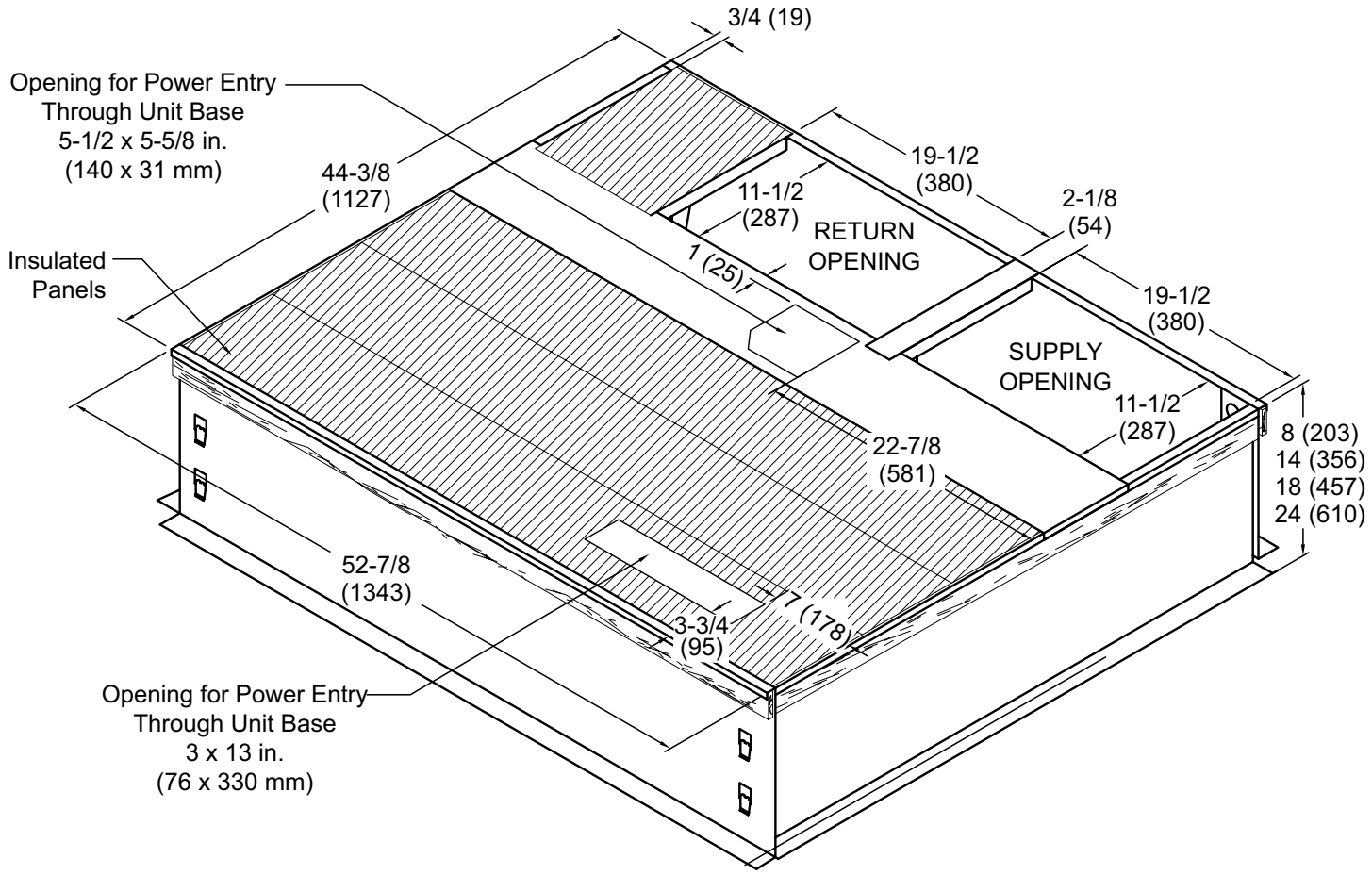

NOTE - Roof deck may be omitted within confines of curb.

Adjustable Roof Curb Dimensions - Small Base Air Conditioners & Heat Pumps

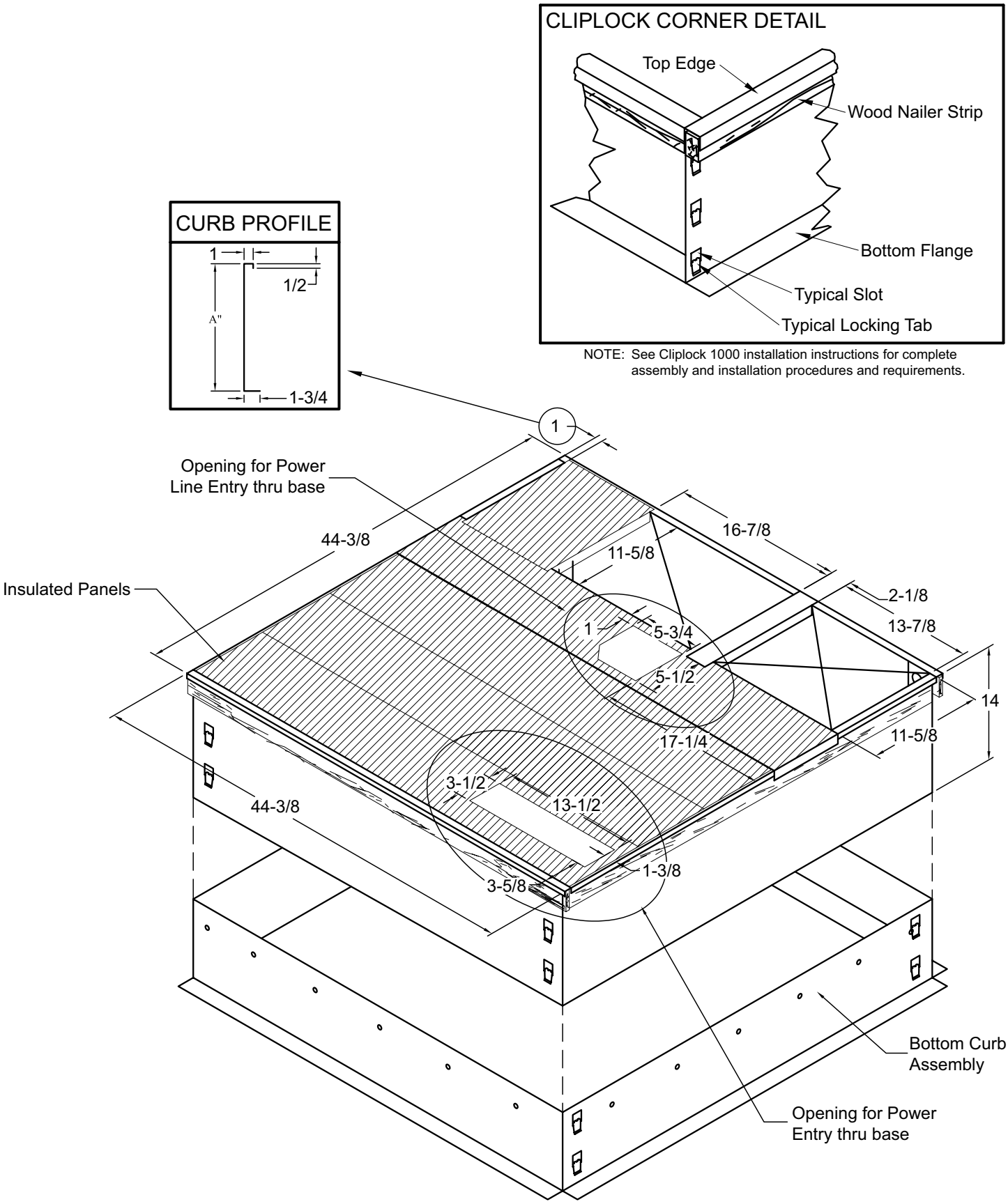

NOTE: See Cliplock 1000 installation instructions for complete assembly and installation procedures and requirements.

NOTE - Roof deck may be omitted within confines of curb.

Adjustable Roof Curb Dimensions - Large Base Air Conditioners & Heat Pumps

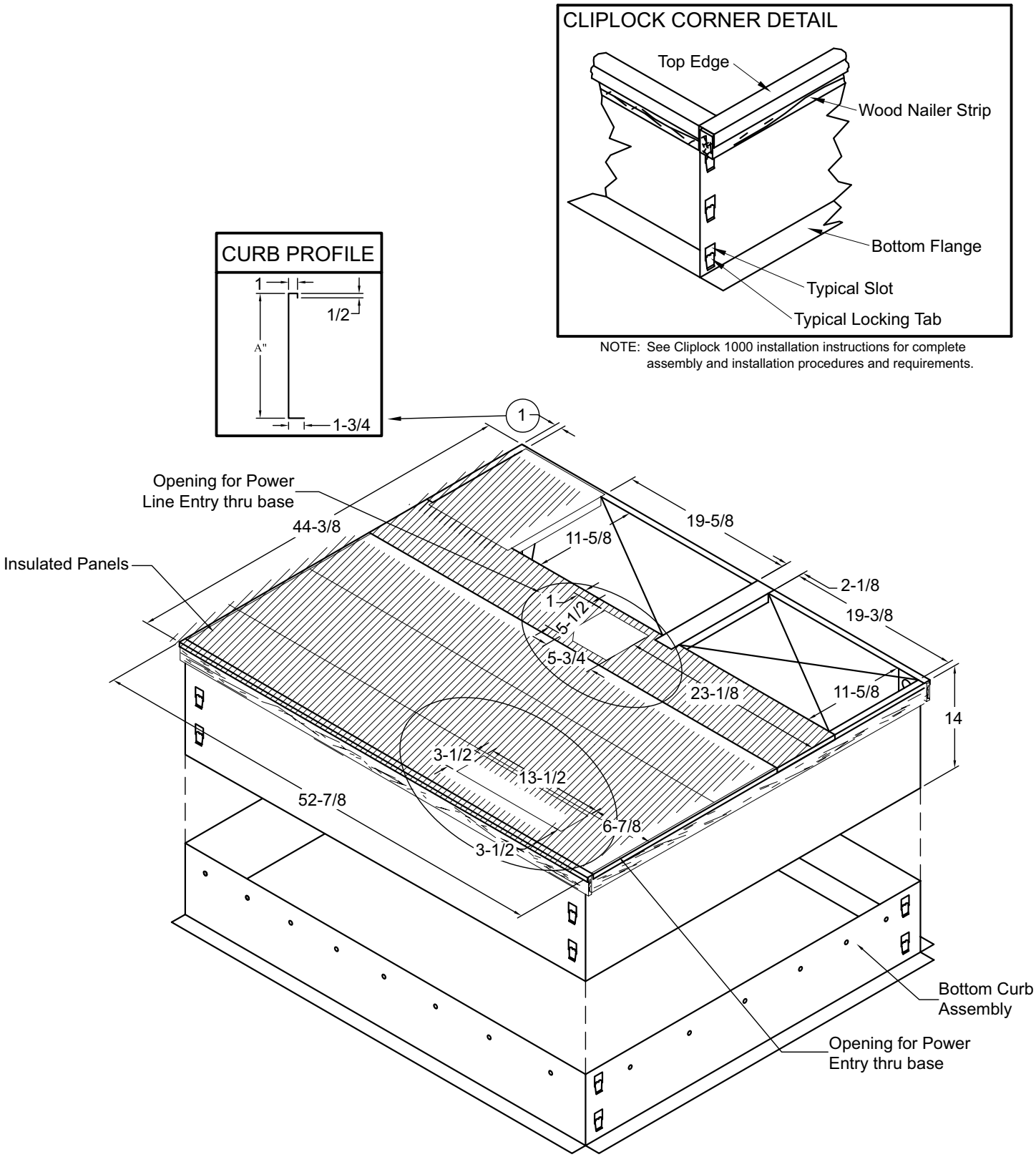

NOTE: See Cliplock 1000 installation instructions for complete assembly and installation procedures and requirements.

NOTE - Roof deck may be omitted within confines of curb.

⚠ WARNING

Improper installation, adjustment, alteration, service, or maintenance can cause injury or property damage. Refer to this manual. For assistance or additional information, consult a qualified installer or service agency.

Installation

These instructions explain the recommended method of installation of the packaged heat pump and air conditioner units and associated electrical wiring.

This unit is designed and approved for use as a self-contained air-to-air outdoor heat pump and air conditioner system.

The units are factory-equipped with a transformer and blower control for applications without auxiliary heat. Electric heat accessory kits (PHK-) can be ordered for field installation of additional heat where required.

These instructions, and any instructions packaged with mating components and/or accessories, should be carefully read prior to beginning installation. Note particularly any **CAUTIONS** or **WARNINGS** in these instructions and all labels on the units.

These instructions are intended as a general guide only, for use by qualified personnel and do not supersede any national or local codes in any way. Compliance with all local, state, provincial, or national codes pertaining to this type of equipment should be determined prior to installation.

Inspection of Shipment

Upon receipt of equipment, carefully inspect it for possible shipping damage. If damage is found, it should be noted on the carrier's freight bill. Take special care to examine the unit inside the carton if the carton is damaged. File a claim with the transportation company.

If any damages are discovered and reported to the carrier, DO NOT INSTALL THE UNIT, **as claim may be denied**.

Check the unit rating plate to confirm specifications are as ordered.

Limitations

The unit should be installed in accordance with all national and local safety codes.

Limitations of the unit and appropriate accessories must also be observed.

The unit must not be installed with any ductwork in the outdoor air stream. The outdoor fan is not designed to operate against any additional static pressure.

Location

The unit is designed to be located outdoors with sufficient clearance for free entrance to the air inlet and discharge air openings. The location must also allow for adequate service access.

The unit must be installed on a solid foundation that will not settle or shift. Adequate structural support must be provided. Install the unit in level position. Isolate the base from the building structure to avoid possible transmission of sound or vibration into the conditioned space.

The heat pump unit foundation should be raised to a minimum of 3" above finish grade. In areas that have prolonged periods of temperature below freezing and snowfall, the heat pump unit should be elevated above the average snow line. Extra precaution should be taken to allow free drainage of condensate from defrost cycles to prevent ice accumulation. The unit should not be located near walkways to prevent possible icing of surface from defrost condensate.

Avoid placing the unit near quiet areas, such as sleeping quarters or study rooms. Normal operating sound levels may be objectionable if the unit is placed near certain rooms.

For improved start-up performance, the condenser coil should be washed with suitable detergent to remove any residue from manufacturing processes.

Use of Unit During Construction

Use of this unit as a construction heater or air conditioner is not recommended during any phase of construction. Very low return air temperatures, harmful vapors and operation of the unit with clogged or misplaced filters will damage the unit.

If this unit has been used for heating or cooling of buildings or structures under construction, the following conditions must be met or the warranty will be void:

- A room thermostat must control the unit. The use of fixed jumpers that will provide continuous heating or cooling is not allowed.
- A pre-filter must be installed at the entry to the return air duct.
- The return air duct must be provided and sealed to the unit.
- Return air temperature range between 55°F (13°C) and 80°F (27°C) must be maintained.
- Air filters must be replaced and pre-filters must be removed upon construction completion.
- The input rate and temperature rise must be set per the unit rating plate.
- The heat exchanger, components, duct system, air filters and evaporator coil must be thoroughly cleaned following final construction clean-up.

- The unit operating conditions (including airflow, cooling operation, ignition, input rate, temperature rise and venting) must be verified according to these installation instructions.

Clearances

All units require certain clearances for proper operation and service. Refer to Table 1 for the minimum clearances to combustibles required for construction, servicing, and proper unit operation.

In the U.S., units may be installed on combustible floors made from wood or class A, B, or C roof covering material.

In Canada, units may be installed on combustible floors. Units must be installed outdoors.

Do not permit overhanging structures or shrubs to obstruct condenser air discharge outlet.

	Clearance to Combustibles	Clearance for Service Access
Front of unit	0 in.	24 in.
Back of unit	0 in.	0 in.
Left side	0 in.	24 in.
Right side	0 in.	24 in.
Base of unit	0 in.	0 in.
Top of unit	0 in.	48 in.
For any future service, installer must provide access to screws of top and rear panels.		

Table 1. Minimum Clearances

Compressor

Units are shipped with compressor mountings factory adjusted and ready for operation. **Do not loosen compressor mounting bolts.**

Roof Curb Installation

If a roof curb is used, follow the manufacturer's installation instructions and be sure that all required clearances are observed (see Clearances section).

Prior to setting the unit on the roof curb, the shipping bracket located underneath the unit must be removed. Remove the two screws in the base rail (located on the front and rear sides of the unit). The four screws and the bracket can be discarded. See Figure 1.

Rigging Unit

Exercise care when moving the unit. Do not remove any packaging until the unit is near the place of installation.

1. Connect rigging to the unit base rails using both holes in each corner.
2. All panels must be in place for rigging.
3. Place field-provided spreaders in place. Spreaders must be of adequate strength and length (must exceed unit dimension by 6 inches).

Units may also be moved or lifted with a forklift. **The lengths of the forks of the forklift must be a minimum of 42 inches.**

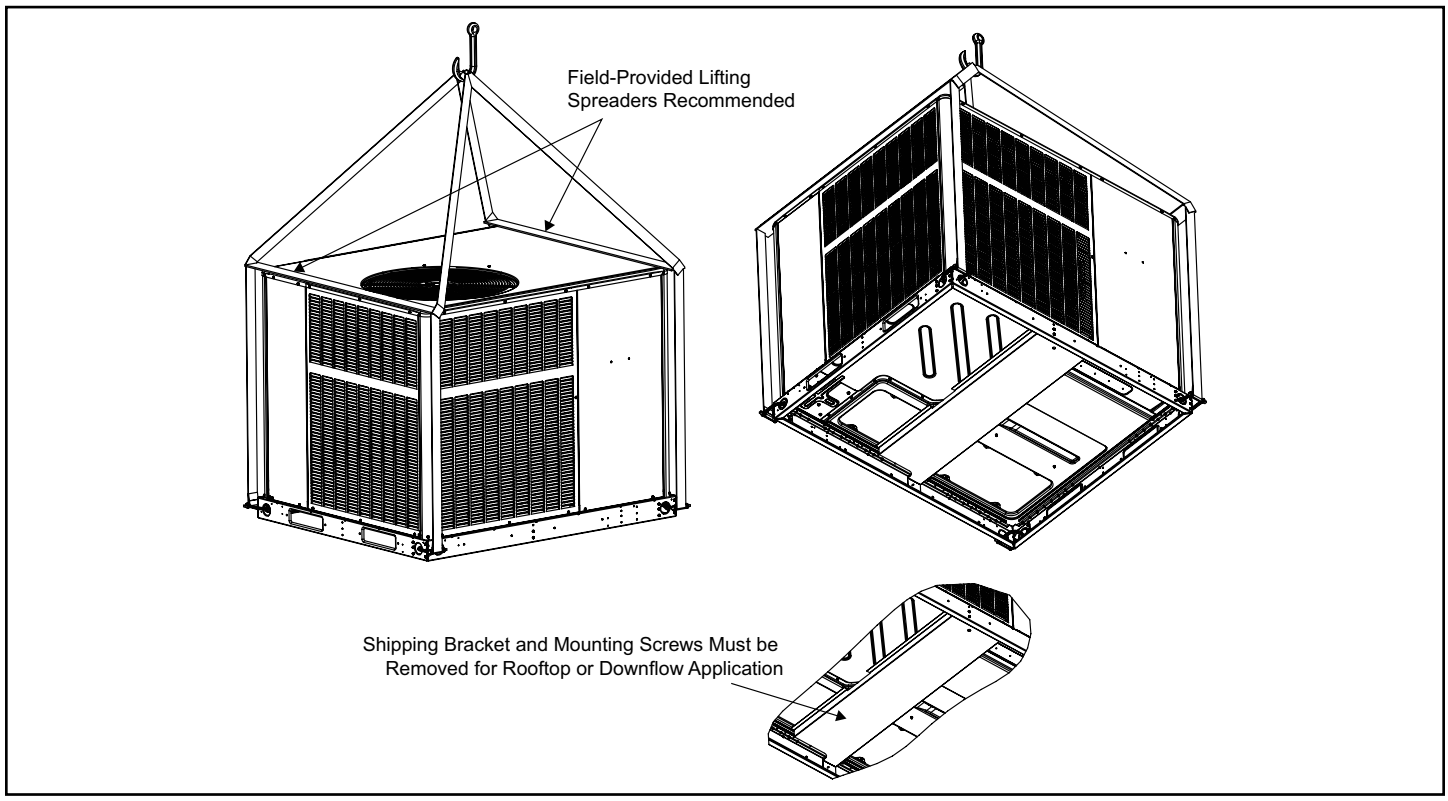

Figure 1.

⚠ CAUTION

Before lifting a unit, make sure that the weight is distributed equally on the cables so that it will lift evenly.

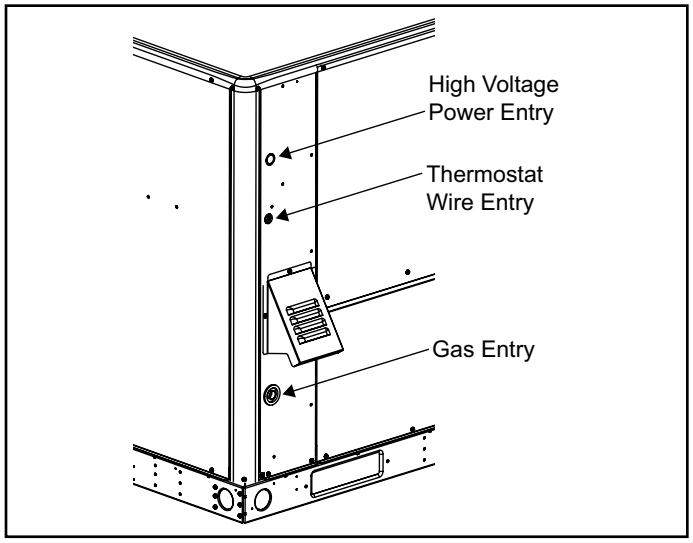

Figure 2.

Unpacking

Locate the four stacking brackets at each corner of the top panel. Remove the screws and washers that secure these brackets. All screws must be re-installed. The washers and stacking brackets can be discarded. Remove the bag and remaining packaging material, which can be discarded. Locate the four plastic fork slot bumpers on the base rails. Remove the fasteners and bumpers and discard.

⚠ CAUTION

As with any mechanical equipment, personal injury can result from contact with sharp sheet metal edges. Be careful when you handle this equipment.

Service Access

Access to all serviceable components is provided by four removable panels: upper access panel (for blower, ID coil, and optional filter), auxiliary heat access, control access panel, and compressor access.

⚠ WARNING

This unit is charged with HFC-410A refrigerant. Operating pressures for units charged with HFC-410A are higher than pressures in units charged with HCFC-22. All service equipment MUST be rated for use with HFC-410A refrigerant.

Electrical Wiring

All field wiring must be done in accordance with National Electrical Code recommendations, local codes, and applicable requirements of UL Standards, or in accordance with Canadian Electrical Code recommendations, local codes, or CSA Standards. Power wiring, disconnect means, and over-current protection are to be supplied by the installer. Refer to the unit rating plate for maximum over-current protection and minimum circuit ampacity, as well as operating voltage. The power supply must be sized and protected according to specifications supplied.

The unit must be grounded with a separate ground conductor. See Figure 4 for typical field wiring connection. The wiring diagram can be found on the unit inside the access panel. Low voltage control wiring are terminal strip or pigtail leads located on the main control box and are color-coded to match the connection called out on the wiring schematic.

NOTE: *An optional bottom-entry power kit is available for these units. See the kit instructions for proper installation details.*

⚠ CAUTION

When connecting electrical power and control wiring to the unit, waterproof-type connectors must be used so that water or moisture cannot be drawn into the unit during normal operation.

Units are factory wired for a 230-volt power supply. If power supply is 208 volts, it will be necessary to change a wire connection on the unit transformer from 240V terminal to 208V terminal as shown on the wiring diagram.

Use only copper conductors.

If any of the original unit wiring is replaced, the same size and type wire must be used.

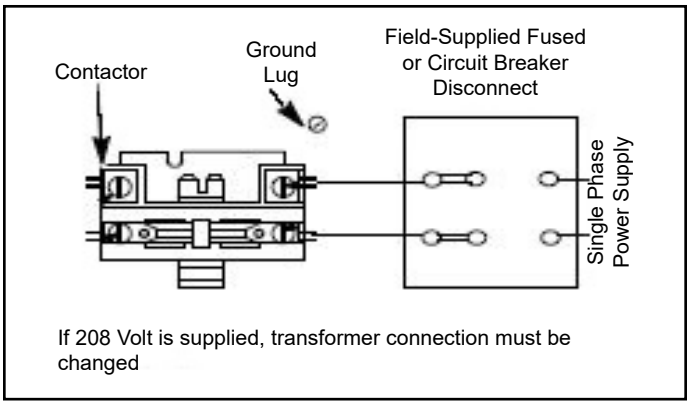

Figure 3. 208/230 Line Voltage Wiring

Thermostat

The room thermostat should be located on an inside wall where it will not be subject to drafts, sun exposure, or heat from electrical fixtures or appliances. Follow the manufacturer's instructions enclosed with the thermostat for general installation procedure. Color-coded insulated wires (#18 AWG) should be used to connect the thermostat to the unit. A minimum of five wires are required for proper installation.

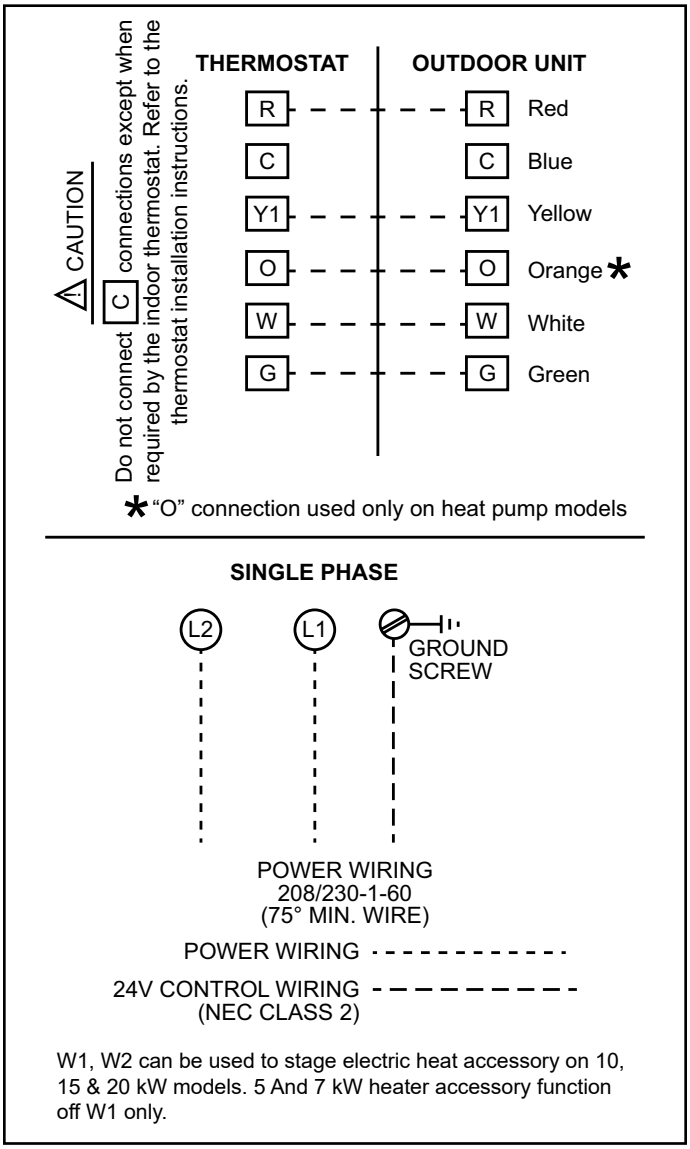

Figure 4. Typical Wiring Connections

Duct System

The duct system should be designed and sized according to the methods in the Air Conditioning Contractors of America (ACCA) manual that is most appropriate to the installation application.

A closed return duct system shall be used. This shall not preclude use of economizers or outdoor fresh air intake. It is recommended that supply and return duct connections at the unit be made with flexible joints.

The supply and return air duct systems should be designed for the CFM and static requirements of the job. **They should not be sized to match the dimensions of the duct connections on the unit.**

The unit is shipped ready for horizontal flow (side duct connections) or downflow (bottom duct connections). All units are equipped with a drain pan overflow switch that is installed and wired at the factory. Duct attachment screws are intended to go into the duct panel flanges. Duct to unit connections must be sealed and weather proofed.

For horizontal duct systems:

1. Remove the duct covers on side of the unit. They can be discarded.
2. Install the duct system to the unit.

For downflow duct systems:

1. Remove the duct covers on side of the unit. Keep the screws and the covers as they will be re-installed later.
2. Remove the downflow duct covers located inside unit. Remove the four screws securing each cover. Remove the covers from the unit. They can be discarded.
3. Remove screws located between the supply and return air openings that attach the blower deck to the base pan. These screws can interfere with bottom duct connections or roof curb seals. Discard these screws.
4. Install the duct system to the unit.
5. Re-install the duct covers removed in Step 1.

Filters

Air filters are not supplied with the unit. A field-provided air filter must always be installed ahead of the evaporator coil and must be kept clean or replaced. Dirty filters will reduce the airflow of the unit.

An optional filter rack kit may be purchased separately for installation inside the unit's coil compartment. Air filter sizes are shown in Table 2 for use with filter rack kit.

NOTE:

The filter rack must be installed prior to installation of the unit in applications where access to the rear panel is limited.

Unit Model	Filter 1	Filter 2
24,30,36	14 x 20 x 1	20 x 20 x 1
42,48,60	20 x 20 x 1	

Table 2. Unit Air Filter Sizes - inches

Condensate Drain

This package unit is equipped with a 3/4” FPT coupling for condensate line connection. Plumbing must conform to local codes. Use a sealing compound on male pipe threads.

Do not operate unit without a drain trap. The condensate drain is on the negative pressure side of the blower; therefore, air being pulled through the condensate line will prevent positive drainage without a proper trap.

The condensate drain line must be properly trapped, routed to a suitable drain and primed prior to unit commissioning.

NOTE: *Install drain lines and trap so they do not block service access to the unit.*

See Figure 5 for proper drain arrangement. The drain line must pitch to an open drain or pump to prevent clogging of the line. Seal around the drain connection with suitable material to prevent air leakage into the return air system.

To prime trap, pour several quarts of water into drain, enough to fill drain trap and line.

⚠ CAUTION

Drain lines should be hand-tightened only. Do not use tools to tighten fitting into drain.

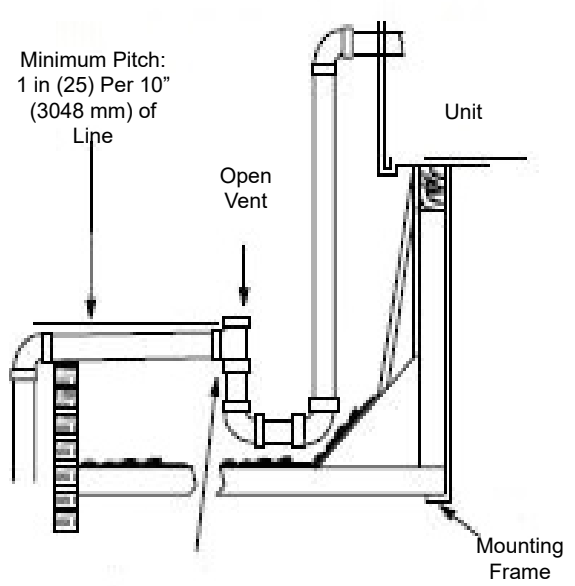

Trap must be deep enough to offset maximum static difference (generally, 3 inches (76 mm) minimum). In addition, the drain line must be supported if longer than 10 feet.

Trap must be primed at start-up.

Figure 5. Typical Condensate Drain Connection

Crankcase Heater (if used)

Some models may be equipped with a crankcase heater to prevent excessive migration of liquid refrigerant into the compressor during off cycles. Power must be maintained to the unit to keep this feature active.

Except as required for safety while servicing, **do not open the system disconnect switch.**

Heater Kit Accessory (if used)

The unit is fully equipped for cooling operation without auxiliary heat. A heater kit accessory may also be used. To install the heater kit accessory (see Figure 7):

1. Disconnect the power and open the main control access.
2. Disconnect the plug separating the high voltage wire harness. Remove the high voltage wire harness plug and discard.
3. Remove the heater blockoff by removing the four screws holding it in place.
4. Insert the heater into the control panel and fasten in the same mounting holes.
5. Plug the heater wiring harness into the wire harness on the control assembly. Field wiring of the auxiliary heater is separate from the unit power supply. Wire the power supply wiring for the heater to the appropriate connections on the heater kit.

Sequence of Operation

Cooling

When the thermostat is in the cooling mode, the O circuit is powered, which energizes the reversing valve. Upon cooling demand, the thermostat closes circuit R and Y. Closing R and Y closes the unit contactor, starting the compressor and outdoor fan. The thermostat automatically closes the R to G circuit, which brings on the indoor blower at the same time. Upon satisfying cooling demand, the thermostat will open the above circuits and open the main contactor, stopping the compressor and outdoor fan. If the unit is equipped with a delay timer, the blower will continue to operate for 60 to 90 seconds, which improves system efficiency.

Heating - Heat Pump Stage

Upon heating demand, the thermostat closes circuit R to Y, which closes the unit contactor, starting the compressor and outdoor fan. The reversing valve is not energized in the heating mode. The thermostat again automatically brings on the indoor fan at the same time. Upon satisfying heating demand, the thermostat opens above circuits and stops unit operation.

Heating - Auxiliary Electric Heat

Upon heating demand for auxiliary electric heat, the thermostat closes circuit R to W, which energizes the

heater sequencers as well as the indoor blower. Upon satisfying auxiliary heat demand, the thermostat opens above circuits and heating elements sequence off; blower continues to operate until all heating elements have turned off.

Defrost System

The defrost system includes two components: the defrost thermostat and the defrost control.

Defrost Thermostat

The defrost thermostat is located on the evaporator coil. When the defrost thermostat senses 35°F or cooler, the thermostat contacts close and send a signal to the defrost control board to start the defrost timing. It also terminates defrost when the liquid line warms up to 60°F.

Defrost Control

The defrost control board includes the combined functions of time/temperature defrost control, defrost relay, diagnostic LEDs and terminal strip for field wiring connections (see Figure 6).

The control provides automatic switching from normal heating operation to defrost mode and back. During the compressor cycle (call for defrost), the control accumulates compressor run time at 30, 60, 90 minute field-adjustable intervals. If the defrost thermostat is closed when the selected compressor run time interval ends, the defrost relay is energized and the defrost begins.

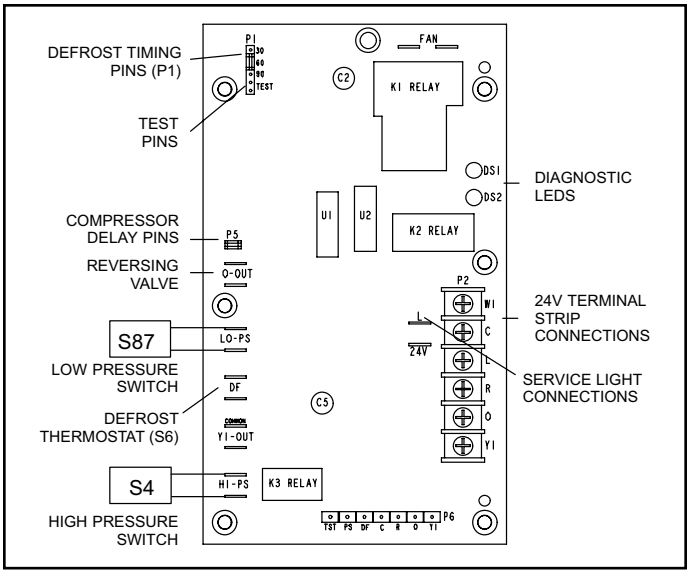

Figure 6. Defrost Control Board

1. An on-board outdoor ambient temperature sensor on the defrost control bypasses the low pressure switch during low ambient temperature below 15°F in heating mode to eliminate nuisance low pressure trips.

   NOTE: *15°F is an approximate temperature, depending upon model and installation location.*

2. A defrost cycle will initiate when there has been a low pressure switch trip; the defrost sensor must be closed and the defrost time interval must not have expired.

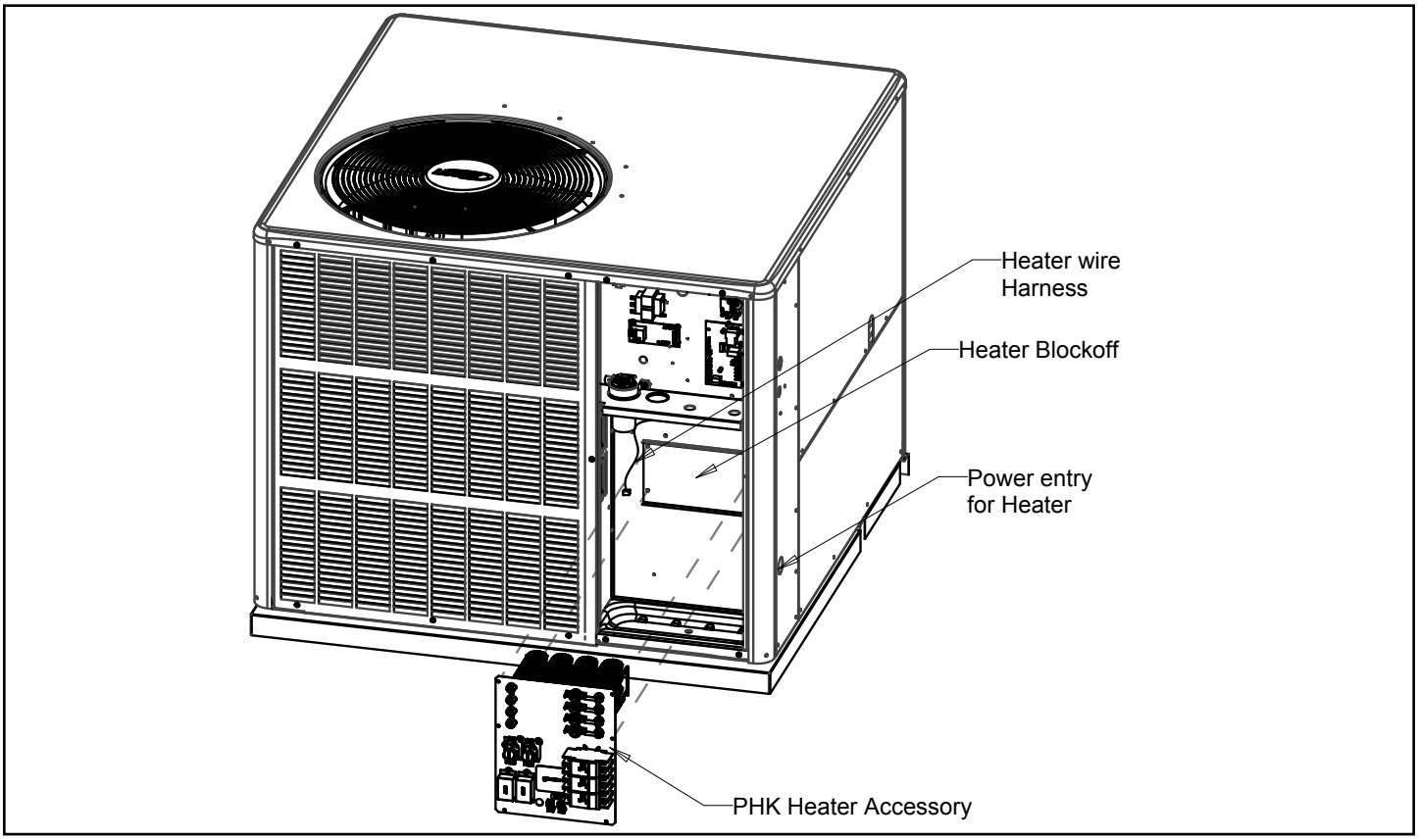

Figure 7. Heater Kit Accessory Installation

3. At the end of the defrost cycle, when the unit goes back to heating mode, the low pressure switch is checked to see if it has reset. If so, the strikeout is not counted. This prevents lockout during extreme winter conditions.

Defrost Control Timing Pins

Each timing pin selection provides a different accumulated compressor run time period during one thermostat run cycle. This time period must occur before a defrost cycle is initiated. The defrost interval can be adjusted to 30 (T1), 60 (T2), or 90 (T3) minutes. **It is intended that this product should be set at the 60-minute time interval at initial installation.** If the timing selector jumper is not in place, the control defaults to a 90-minute defrost interval. The maximum defrost period is 14 minutes and cannot be adjusted.

NOTE:

For geographic areas that experience low temperature and high humidity conditions (below 35°F and above 80% RH), the defrost timer pin must be field set at installation to a 60 or 30 minute defrost interval to ensure reliable system operation while in heating mode.

A test option is provided for troubleshooting. The test mode may be started any time the unit is in the heating mode and the defrost thermostat is closed or jumpered. If the jumper is in the TEST position at power up, the control will ignore the test pins. When the jumper is placed across the TEST pins for 2 seconds, the control will enter the defrost mode. If the jumper is removed before an additional 5-second period has elapsed (7 seconds total), the unit will remain in defrost mode until the defrost thermostat opens or 14 minutes have passed. If the jumper is not removed until after the additional 5-second period has elapsed, the defrost will terminate and the test option will not function again until the jumper is removed and reapplied.

Compressor Delay (Quiet Shift)

The defrost board has a field-selectable function to reduce occasional sounds that may occur while the unit is cycling in and out of the defrost mode. The compressor will be cycled off for 30 seconds going in and out of the defrost mode when the compressor delay jumper is removed.

NOTE: *The 30-second "off" cycle is not functional when jumpering the TEST pins.*

Time Delay

The defrost control includes a compressor timer, which ensures the compressor is off for a minimum amount of time between operating cycles.

The timed-off delay is 5 minutes long. The delay helps to protect the compressor from short cycling in case the power to the unit is interrupted or a pressure switch opens. The delay is bypassed by placing the timer select jumper across the TEST pins for 0.5 seconds.

Pressure Switch Circuit

High and low pressure switches are connected to the defrost control board on heat pump models. Air conditioning models have a high pressure switch installed in line with compressor contactor coil (see Figure 6).

During a single demand cycle, the defrost control will lock out the unit after the fifth time that the circuit is interrupted by any pressure switch wired to the control board. In addition, the diagnostic LEDs will indicate a locked-out pressure switch after the fifth occurrence of an open pressure switch (see Table 3).

The unit will remain locked out until power to the board is interrupted, then re-established, or until the jumper is applied to the TEST pins for 0.5 seconds.

NOTE: *The defrost control board ignores input from the low pressure switch terminals as follows:*

- During the TEST mode
- During the defrost cycle
- During the 90-second start-up period
- For the first 90 seconds each time the reversing valve switches heat/cool modes

If the TEST pins are jumpered and the 5-minute delay is being bypassed, the LO PS terminal signal is not ignored during the 90-second start-up period.

Diagnostic LEDs

The defrost board uses two LEDs for diagnostics. The LEDs flash a specific sequence according to the condition as shown in Table 3.

Defrost Board Diagnostic LEDs		
Green LED (DS2)	**Red LED (DS1)**	**Condition**
OFF	OFF	No Power to Control
Simultaneous slow FLASH		Normal Operation / Power to Control
Alternating Slow FLASH		5-min Anti-Short-Cycle Delay
ON	Slow FLASH	Low Pressure Switch Ignored (Low Ambient)
Fault & Lockout Codes		
OFF	Slow FLASH	Low Pressure Switch Fault
OFF	ON	Low Pressure Switch Lockout
Slow FLASH	OFF	High Pressure Switch Fault
ON	OFF	High Pressure Switch Lockout

Table 3. Defrost Control (CMC1) Diagnostic LEDs

System Performance

This equipment is a self-contained, factory optimized refrigerant system, and should not require adjustments to system charge when properly installed. If unit performance is questioned, perform the following checks.

Ensure unit is installed per manufacturer's instructions and that line voltage and air flow is correct. Refer to the following tables for proper performance value. The indoor metering device varies by model; when checking performance of a unit using an orifice for metering, refer to the suction superheat value to judge performance. When checking performance of a unit that uses an expansion valve for metering, refer to the subcooling value to judge system performance.

If the measured performance value varies from table value allowance, check internal seals, service panels and duct work for air leaks, as well as restrictions and blower speed settings. If unit performance remains questionable, remove system charge, evacuate to 500 microns, and weigh in refrigerant to nameplate charge. It is critical that the exact charge is re-installed. Failure to comply will compromise system performance.

If unit performance is still questionable, check for refrigerant related problems, such as blocked coil or circuits, malfunctioning metering device or other system components.

Model	Suction Superheat +/- 3°	Liquid Subcooling +/- 2°
2 Ton	13	
2.5 Ton	16	
3 Ton	14	
3.5 Ton	14	
4 Ton	16	
5 Ton	17	
Based on outdoor ambient temperature of 82°F, and indoor entering air of 80°F db, 67°F wb.		

Table 4. Air Conditioner Unit Cooling System Performance Values

Model	Suction Superheat +/- 3°	Liquid Subcooling +/- 2°
2 Ton	18	
2.5 Ton	16	
3 Ton	16	
3.5 Ton	22	
4 Ton	22	
5 Ton		5
Based on outdoor ambient temperature of 82°F, and indoor entering air of 80°F db, 67°F wb.		

Table 5. Heat Pump Cooling System Performance Values

Model	Liquid Subcooling +/- 2°
2 Ton	25
2.5 Ton	15
3 Ton	28
3.5 Ton	20
4 Ton	35
5 Ton	28
Based on outdoor ambient temperature of 47°F, and indoor entering air of 70°F db.	

Table 6. Heat Pump Heating System Performance Values

Maintenance

⚠ WARNING

Before performing maintenance operations on the system, shut off all electrical power to the unit. Turn off accessory heater power switch if applicable. Electrical shock could cause personal injury or death.

Periodic inspection and maintenance normally consists of changing or cleaning the filters and cleaning the evaporator coil. On occasion, other components may also require cleaning.

Filters

Filters are not supplied with the unit. Inspect once a month. Replace disposable or clean permanent type as necessary. Do not replace permanent type with disposable.

Motors

Indoor and outdoor fan and vent motors are permanently lubricated and require no maintenance.

Indoor fans are equipped with a permanent magnet constant torque motor. These motors remain energized and are controlled by 24V signals. For high static applications, use Tap 3 for cooling speed and Tap 5 for heating speed.

Evaporator Coil

Dirt and debris should not be allowed to accumulate on the evaporator coil surface or other parts in the air circuit. Cleaning should be as often as necessary to keep coil clean. Use a brush, vacuum cleaner attachment, or other suitable means. If water is used to clean the coil, be sure the power to unit is shut off prior to cleaning. **Care should be used when cleaning the coil so that the coil fins are not damaged.**

Do not permit the hot condenser air discharge to be obstructed by overhanging structures or shrubs.

Condenser Coil

Clean condenser coil annually with water and inspect monthly during the cooling season.

Condenser coil may need to be cleaned at startup in case oil from the manufacturing process is found on the condenser coil.

Table 7. Cooling Performance - AC Models

80 DB / 67 WB Deg. Return Air		Air Temperature Entering Evaporator Coil, Degree F											
Cooling Input (1000 BTU)	**Pressure**	**65°**	**70°**	**75°**	**80°**	**82°**	**85°**	**90°**	**95°**	**100°**	**105°**	**110°**	**115°**
24	Suction	135	136	137	139	139	141	143	146	148	150	152	154
30		135	137	140	142	143	145	147	150	152	154	155	157
36		135	137	140	142	143	144	147	149	151	152	154	155
42		129	132	135	139	140	141	143	145	146	147	148	149
48		132	136	139	143	144	145	146	147	149	151	152	154
60		130	131	133	134	135	136	139	141	144	146	149	152
24	Liquid	250	266	282	298	304	318	340	363	388	413	438	463
30		247	269	292	314	323	336	358	380	406	432	457	483
36		250	275	301	326	336	351	375	399	423	446	470	493
42		248	271	293	316	325	339	362	385	411	436	462	487
48		265	286	308	329	338	352	376	400	427	455	482	509
60		256	276	296	316	324	340	365	386	415	438	473	503

Table 9. Cooling Performance - HP / DF Models

80 DB / 67 WB Deg. Return Air		Air Temperature Entering Evaporator Coil, Degree F											
Cooling Input (1000 BTU)	**Pressure**	**65°**	**70°**	**75°**	**80°**	**82°**	**85°**	**90°**	**95°**	**100°**	**105°**	**110°**	**115°**
24	Suction	130	134	138	141	143	145	148	151	152	154	155	156
30		130	133	136	139	140	141	143	145	147	149	151	153
36		136	138	140	142	143	144	145	147	149	151	152	154
42		127	131	134	138	139	141	144	147	147	148	148	148
48		132	135	138	142	143	144	147	149	151	152	154	155
60		133	134	135	136	136	137	138	140	142	146	149	146
24	Liquid	236	255	275	294	302	316	339	362	388	414	440	466
30		254	274	294	314	322	336	360	383	410	437	464	491
36		267	285	303	322	329	343	367	391	417	443	468	494
42		238	259	280	302	310	324	348	371	396	421	445	470
48		248	271	294	317	326	340	363	386	412	438	464	490
60		245	276	296	316	312	340	365	373	415	438	473	479

Table 8. Heating Performance - HP / DF Models

70 Deg. F Return Air		Air Temperature Entering Evaporator Coil, Degree F											
Cooling Input (1000 BTU)	**Pressure**	**0°**	**5°**	**10°**	**17°**	**20°**	**25°**	**35°**	**40°**	**47°**	**50°**	**55°**	**60°**
24	Suction	33	41	49	60	65	73	89	97	108	113	121	129
30		31	38	45	55	59	66	81	88	98	102	109	117
36		35	42	49	58	62	69	82	89	98	102	109	115
42		25	33	42	54	59	68	85	94	106	111	120	129
48		32	39	47	57	62	69	84	92	102	107	114	122
60		30	37	44	54	58	65	80	87	97	101	108	116
24	Liquid	249	256	263	272	276	283	296	303	312	316	323	329
30		246	253	260	270	274	281	295	302	312	316	323	330
36		251	258	265	275	279	286	300	307	317	321	328	335
42		297	300	304	309	311	315	322	326	331	333	337	341
48		289	297	306	318	323	332	349	358	370	375	384	393
60		272	281	290	302	307	316	334	343	355	360	369	378

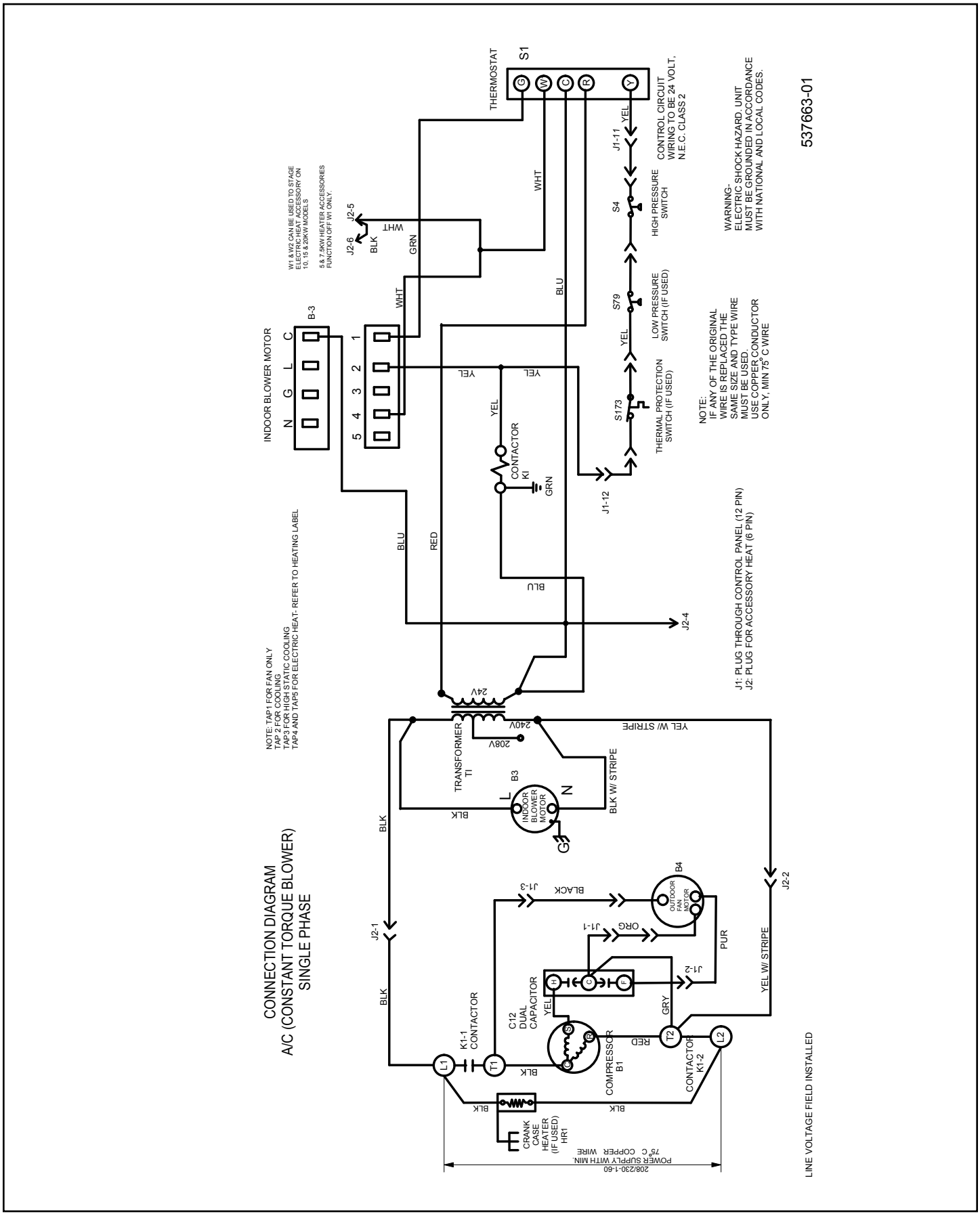

Figure 8. Connections Diagram - A/C Constant Torque

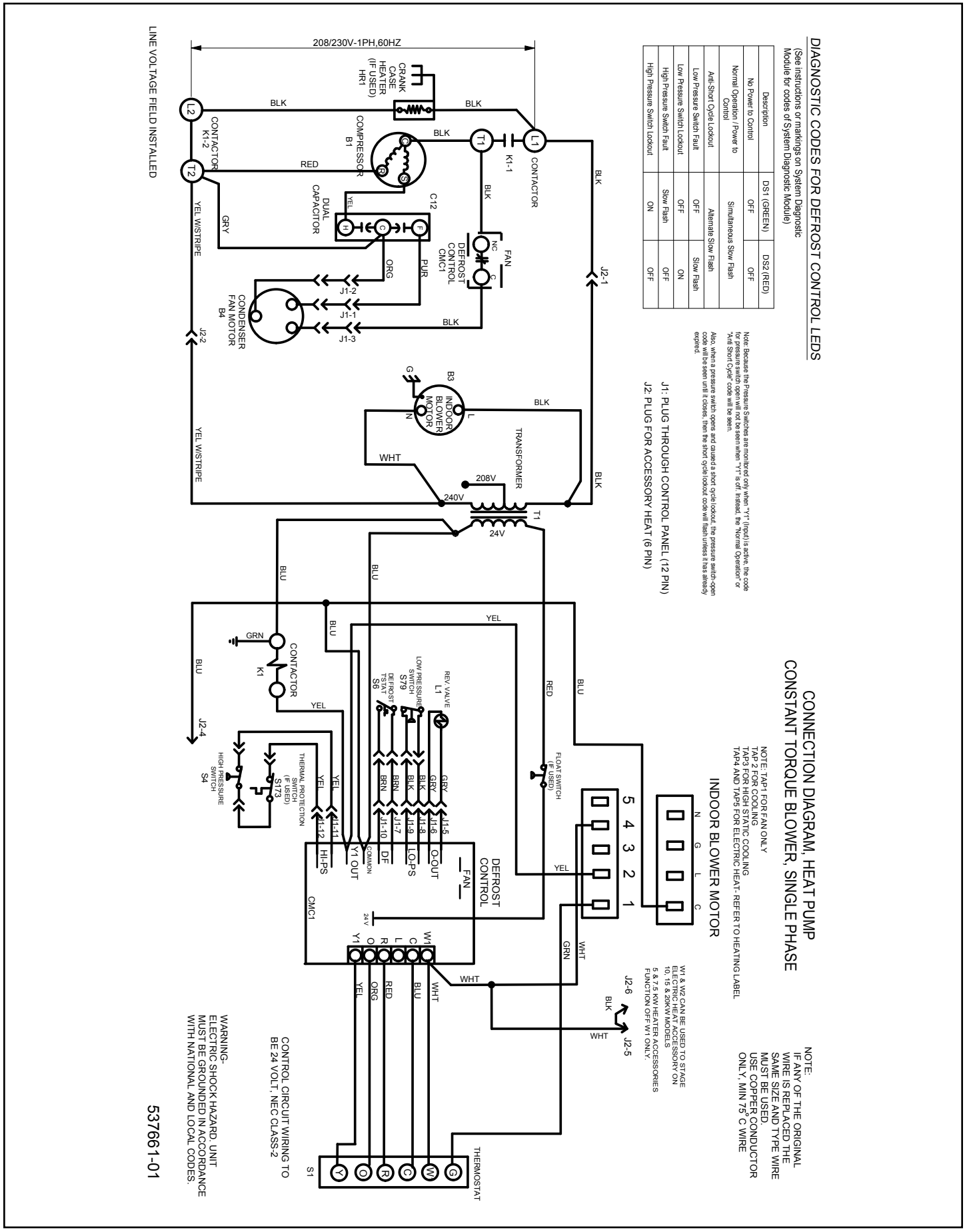

Figure 9. Connections Diagram - Heat Pump Constant Torque