SAMSUNG

SUBMITTAL

VDK-1 / VDK-2 / VDK -3

DVM / CAC Multiposition Air Handler Unit Downflow Conversion Kit

Job Name	Location				
Purchaser	Engineer				
Submitted to	Reference ☐	Approval ☐	Construction ☐		
Unit Designation	Schedule #				

Downflow kit(s) on this project

	Model number	Description
☐	VDK-1	Downflow kit, small chassis
☐	VDK-2	Downflow kit, medium chassis
☐	VDK-3	Downflow kit, large chassis

A downflow kit is required when airflow from the unit must blow downward.

Included in the kit: AHU coil door and return air temperature sensor holder. The original coil door can be discarded.

Compatibility

Model Number	DVM S	CAC 1:1
VDK-1	AM012JNZDCH/AA*	-
	AM018JNZDCH/AA*	AC018KNZDCH/AA
	AM024JNZDCH/AA*	AC024KNZDCH/AA
VDK-2	AM030JNZDCH/AA*	AC030KNZDCH/AA
	AM036JNZDCH/AA*	AC036KNZDCH/AA
VDK-3	-	AC042KNZDCH/AA
	AM048JNZDCH/AA	AC048KNZDCH/AA
	AM054JNZDCH/AA	AC054KNZDCH/AA
	AM060JNZDCH/AA	-
	AM072JNZDCH/AA	-

*Will require EEV extension wire harness, part number DB39-00988A, sold separately.

EEV extension wire harness shall be needed for noted models, and purchased separately.

Electric heat kits cannot be installed when using a downflow kit.

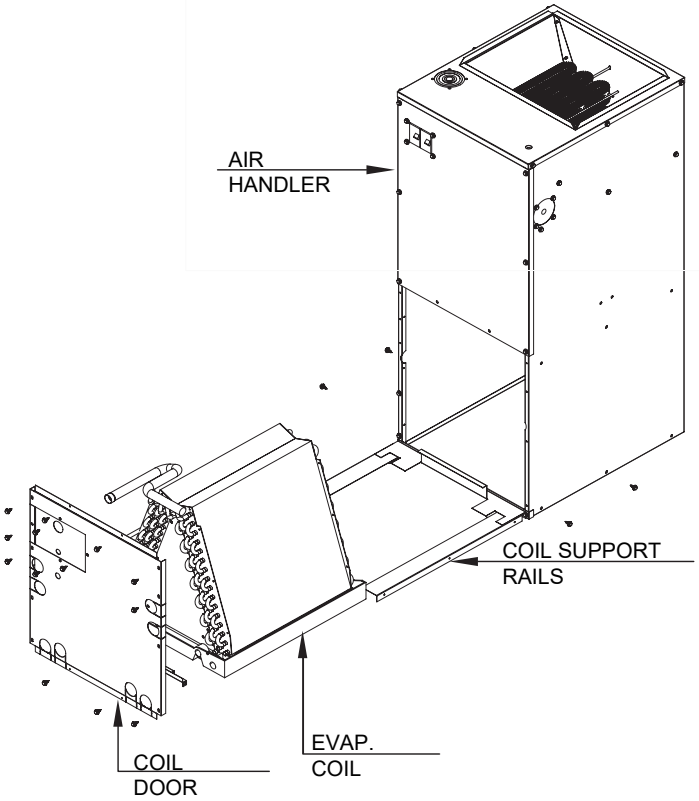

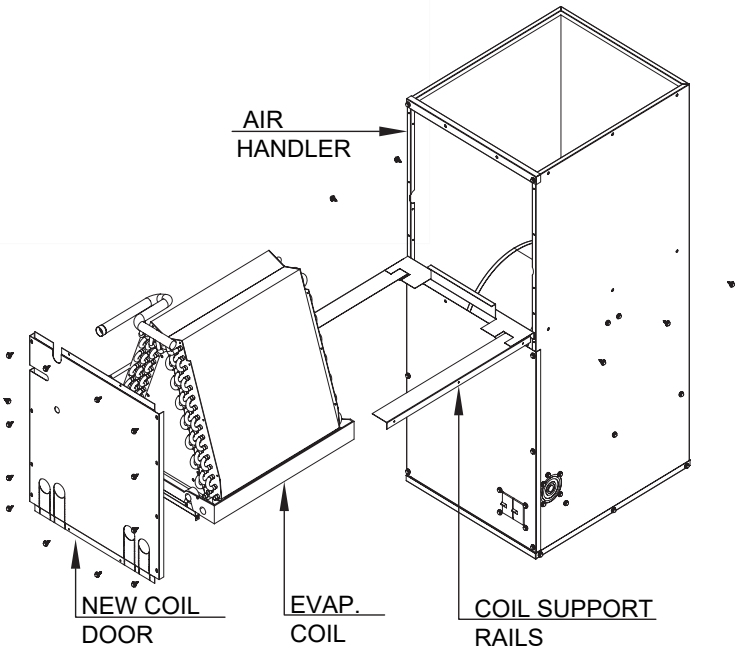

888-699-6067

www.SamsungHVAC.com

© 2018 Samsung HVAC
SHA-DVM-10222018