INDEX

A

A/C Accessories 551
Access Fittings 235, 236
Access Fitting Tools 232
Access Valves 233, 234
Accumulators 351, 352
Acetylene 816
Acetylene Soldering Accessories 809-811
Acetylene - Torches & Accessories 811
Acid Test Kits 866
Acoustic Isolators 204
ACR Data Logger 882
Actuators / Motors 664-673
Adhesives 207, 785, 786, 788
ADP
  Hydronic Air Handlers 545
  Unit Heaters 539, 540
AEROQUIP Flexible Hose 238
Air Cleaners 376-380
Air Conditioner Brackets 551, 552
Air Conditioning
  ALLIED
    AirEase 515-517, 519, 520, 524-527
    ALLIED COMMERCIAL 530-536
    DUCANE 518, 522, 528, 529
  DAIKIN 428-487
  FRIEDRICH 394-397, 405, 406
  PERFECT AIRE 393
  SAMSUNG 505-514
  THERMOPLUS 386-389
Air Cooled Condensers ..... , 131
Air Cooled Condensing Units .....
..... 16-24, 30- 32, 128-130, 166-176
Air Filters 376
Air Filtration 369-373
Air Moving Products 718, 719
Air Purifiers 377-380
Air Switches 681
Air to Air Heat Exchangers 369-373
Air Velocity Tester 902
Air Vent 647
Alarm Systems 885, 886
ALLIED
  AIREASE
    Residential Air Conditioners 515-517
    Residential Furnaces 524-527
    Residential Heat Pumps 519, 520
  ALLIED COMMERCIAL
    Light Commercial Split Systems 536
    MAGICPAK All-in-one HVAC Packaged Unit . 534

*While Refrigerative Supply Ltd. has made every effort at the time of publication to ensure the accuracy of the information provided herein, product specifications, configurations and pricing are all subject to change without notice. Please contact your local RSL branch to verify.

    Package Rooftop Units 530-533
    Split System Units 535
    Unit Heaters 537, 538
  DUCANE
    Residential Air Conditioners 518
    Residential Furnaces 528, 529
    Residential Heat Pumps 522
All Round Strapping 200
Aluminum Insulation Protection 209
AMPROBE Multimeters 910
Anchors 205
Angle Valves 350
Anti-Vibration Pads 229
APPION
  Recovery Units 871
Appliance Heaters 778
Aquastat Controls 650
Armaflex 207
  Shield 208
Armored insulation 208
Aspen Pumps 554-556
Axial Fans 703

B

BACHARACH
  Recovery Units 871
Ball Valves 231, 346
BASO
  Ignition Controls 621
Batteries 823
Bead Filter Drier 340
Bearings 727
BELIMO Actuators 667-673
Belts 730
Bimetal Limits Thermostats 683
BITZER
  Condensers 365, 366
  Evaporators 364
  Receivers 362, 363
BITZER Compressors 76-82
BITZER Products 361
Black Iron Pipe 231
Blades, Fan 722-725
Blankets Sound 40
Blower Wheels 720, 721
BOHN

Air Cooled Condensing Units 165-176
Coils 133-153
Indoor Units 154-164
Outdoor Units 154-164
Pro3 Packaged Refrigeration Systems 177-179
Smart Defrost Kit 154-56
Bolts 202
BONDHUS Tools 832
Braided Hose 227
Brass Fittings 217-223
Brazed Plate Heat Exchangers 358, 359
Braze-Free Fittings 245, 246, 247
BROWNING Belts 730
Brushes, Pipe Cleaning 851, 852
BUSSMANN
Fuses 759, 760

C

Cable Ties 761, 762
Calclean 792, 793
CALGON
Air Purifiers 377
Chemicals 791-799, 866
Glycol 798
Insulation Products 801
Oils 865
Refractometer 868
Refrigerant Leak Sealant 867
Sprayers 794
Cam-Stat 686, 687
Capacitors 738, 739
Capillary Tubing 206
Cap Tube Tools 853
Carbon Monoxide Meters 906
Catch-All Driers 277-285
Caulking Gun 785
C-Clamps 201
CDA Valves 318-327
Ceiling Flange 201
Channel, Strut & Accessories 199, 200
Charging Hoses 863, 864
Check Valves 345, 349
Chemicals 780, 788, 803-807
Cladding 209
Clamp Meters 907, 908
Clamps
Cushion/Vibration/C-Clamp 199
Hose 223
Cleaners 227, 780, 807
Cleveland Controls Adjustable Air Switch 681
Clocks, PARAGON 696, 697
CO2 Compressors and Scrolls 64
CO2 Evaporators 132
CO2 Gas Cooler 132
CO2 Gas Coolers & Evaporators 132
Coach Screws 201
Coaxial Condensers 353
Coil & Condenser Cleaners 791-793
Coils
Cooling 547
Evaporator 116-153, 180, 548
Foster Replacement 107
Heating 546
Combustion Analyzer 877
COMFORT-AIRE Water Source Heat Pumps ... 384, ... 385
Communication Controls 616, 617
Compound Gauges 860, 861
Compression Fittings 221
Compressor Protectors 731
Compressors
Bitzer 76-82
Copelametic 59-75
Copelaweld 42-58
DANFOSS 40, 41, 407-426
EMBRACO 40, 41, 407-426
Scroll 53, 54, 56, 57, 58, 55
System Pro 43, 44, 45, 46, 47
Tecumseh 83, 84, 85
Concrete Pads 552
Condensate Drain Pans 776
Condensate Pumps 554-556, 564
Condensers 365, 366, 198
Condenser Tube Cleaner 851, 852
Condensing Units
KEEPRITE 189-197
Tecumseh 102-105
Condensing Units, COPELAND 16-34
Air Cooled 16-36
Condensate Base 26
F-Line 17, 30-34
M-Line 16-29
R-290 ..... 27, 28
Water Cooled 25-39
Contactors 688, 689
Cooling Tower Water Treatment 797
Coolmate 238
COOPER / ATKINS
Pocket Thermometers 892
Thermometers 887-892
COOPER-ATKINS/ BUSSMANN
Fuses 759, 760
COPELAND
Discus Nomenclature 70

Copelaweld Compressors 42-53, 58
Copper Fittings 212-216
Copper Tubing 206
Core Remover 232
Corrosion Inhibitors 806
C-PORT Rooftop Blocks 227, 228
Crankcase Heater 779
Curtain 771
Cushion Clamps 199
Cylinders, Recovery 872

D

DAFCO Filtration Group 376
DAIKIN
- Air Handlers 466-482, 485
- Daikin Fit 487
- Indoor Coils 486
- Inverters 487
- Residential Air Conditioners 428-441
- Residential Heat Pumps 442-465

Damper Linkages 665
Damper Motors 664-666
DANFOSS 349
Data Logger 882
Data Logger Alarm 883
Defrost Clocks 696, 697
Defrost Controls 154-156
Defrost Heaters 778
Defrost Termination Control 629
Defrost Timers 690
Degreasers 799
Dehumidifiers
- THERMOPLUS 390, 391

De-Ice Controls 634
Delay on Break Timers 733
Delay on Make Timers 732
Dial Thermometers 890
Digital Refrigeration Analyzer 857
Digital Thermometers 893-898
Disconnect Switches 749, 750
Distributors, SPORLAN 331-333
Diversitech
- Refrigerant Leak Sealant 867

DIVERSITECH
- Equipment Pads 552
- Nitrogen Purging 815

DIXELL
- Electronic Temperature Controls 616

Documentation Systems for Refrigerants 918
Door Heater 778
DOUCETTE
- Brazed Plate Heat Exchanger 358

Drain Pan Cleaners 780
Driers 234, 277-285
Dual Acting Water Valves 615
Duct Booster Fans 704
Duct Heaters 553
Duct Tape 808
DWYER
- Gauges and Manometers 903

DWYER Gauges and Manometers 862

E

Ears/Hearing Protection 915
Ecoline Compressors 76-78
Electrical Accessories 749-762
Electrical Connectors 757, 758
Electrical Control Valves 337
Electrical Protectors 731
Electric Heat Sequencers 684
Electric Heat Thermostats 643
Electronic Air Cleaners HONEYWELL 376
Electronic Defrost Controls 697
Electronic Tank Heater Blanket 872
Electronic Temperature Controls 575, 576-579, 617, ... 616, 622
Electronic Temperature Control System 318-327
EMBRACO Compressors 40, 41, 407-426
EMERSON
- CO2 Compressors and Scrolls 64
- Electrical Control Valves 337
- Hermetic Moisture Indicators 339
- Motors 712, 713
- Solenoid Valves & Coils 338, 339
- System Protectors 340

Enthalpy Control 652
Epoxy 785, 786, 788
Equipment Isolators 204
Equipment Pads 552
ESSICK AIR Evaporative Coolers 383
Evaporative Coolers 383
Evaporator Coils 548
Evaporators 364
Exhaust Fans 718, 719
Extension Cords 758

F

Fan Blades 722-725
Fan Delay Control 585, 629
Fan Duct Booster 704
Fan & Limit Controls 651, 682, 684, 686, 687
Fan Relay Centers 656, 680
Fans 718, 719
Fans, Axial 703

Fan Speed Controls....602
FANTECH....371-374
FASCO
Blower Wheels....721
Motors....702, 707, 708, 710
Fasteners....202, 205
Feeders, Drip/Micromet....797, 798
FIELDPIECE
Manometers....903
Recovery Units....869
Scales....875
Thermometers....894
Filter Driers....239
Filter Rack....375
Fin Comb....851
Fittings....212-216
Flame Safeguard Controls....662
Flare Fittings....217-220
Flaring Tools....847, 848
Flashlights....822, 823
Flexible Gas Connectors....229
F-Line Copeland Condensing Units....17, 30-34
FLO-CON....337-343
Flow Switches....589
Fluid Coolers....131
Fluke
Thermal Imaging Camera....896
FLUKE
Cases....911
Clamp Meters....907, 908
Infrared Thermometer....895
Insulation Tester....904
Multimeters....910,
Temperature Humidity Meter....893
Test Leads, Probes & Clips....899, 900, 906, 908, 912-914
Thermometers - Digital....897
Flux....817-820
Foam Tape....801
Form Cases/Holders....824
FORTRESS
A/C Accessories....551
FORTRESS Tubing Duct Cover....550
Foster Replacement Coils....107
FRIEDRICH
Air Conditioners....394, 395
Hazardous Location Room A/C....396, 397
PTACs....401-404
Single Package Vertical A/C & H/P....405, 406
Thru-The-Wall A/C....398-400
FULL GAUGE....617
Fuse Holders....760
Fuses....759, 760
Fusible Plugs....220

G

Gas Appliance Connectors....229
Gas Ball Valves....231
Gas Controls....657-662
Gasket Compounds....781-784
Gaskets....772-775
Gas Piping System....230
Gas & Regrigerant Detectors....879-881
Gas Valves....657-660, 685
Gas Vent Fittings....224-226
Gauges....860-862
Gear Clamps....223
Gear Wrenches....830
GFCI Disconnects....749, 750
Globe Valves....344, 345
Glycol....798
GOSS....811
GRASSLIN & INTERMATIC....691-695
Gravity Coils....107

H

Hacksaws....842
Hand Cleaners....789
Hand Tools....829
Hand Valves....344
Hangermate Anchors....205
Hangers, Pipe....200, 203
Hard Start Kits....741, 742
HARRIS
Sil-Fos....817
Head Pressure Controls....736
Heaters....778
Heat Exchangers....350
Heat Exchanger Suction Accumulators....352
Heating Coils....546
Heating Tape....777
Heat Pump Defrost Control....634
Heat Pumps
COMFORT-AIRE....384, 385
Water Source....384, 385
Heat Reclaim Valves....296
Heat Recovery Ventilators....369-373
HENRY TECHNOLOGIES
Oil Separators....368
Pressure Safety Devices....347
Heresite....806
Hermetic Moisture Indicators....339
HILMOR
Flaring Tools....847

Sheet Metal Tools 843
Tube Benders 846
Tube Cutters 845
Tubing Tool Kit 848
Hinges 763-766
HONEYWELL
Actuators / Motors 664-666
Air Cleaners 376
Air Vent 647
Aquastat Controls 650
Damper Linkages 665
Enthalpy Control 652
Fan Centers 656
Fan & Limit Controls 651
Flame Safeguard Controls 662
Gas Controls 657-661
Humidifiers 375
Humidity Controls 652
LCBS Connect 646
Line Voltage Thermostats 647-649
Lyric 639, 641
Motorized Valves 663
Pilot Ignition Module 661
Pneumatic Controls 565, 566, 567, 568
Relays 655
T6 Series Thermostats 640
Temperature Controls 643, 644, 649-651
Thermostats 638-643
Ventilation Controls 645
VisionPRO 641
WiFi 9000 639
WiFi VisionPro 8000 640
HONEYWELL ANALYTICS
Gas & Refrigerant Detectors 879-881
Hose Fittings 223
Hoses, Pressure Control 601
Hot Surface Ignition Controls 681
HUBBELL Electrical Products 750
Hubs 724
Humidifier Chemicals 780
Humidifiers 375
Humidity Controls 652
Humidity Meters 890
Humidity Recorder 882, 883
Humidity Tester 889-898
Hydronic Air Handlers 545

I

Ice Equipment Controls 631, 632
Ice Machine Cleaners 795
Ice Rink Dehumidifiers 390, 391
ICM CONTROLS 731-737
IDEAL Tools 757, 827
Igniter 824
Ignition Controls 621, 661
IMPERIAL Tools 846, 847, 848, 849, 850
Indoor Condensing Units 154-164
INFICON
Charging Scales 875
Gas Mate 878
Leak Detectors 876, 878
Recovery Unit 870
Recovery Units 870
Vacuum Pumps 874
Infrared Thermometer 894, 895
INFRASAVE Radiant Heaters 543, 544
Inline Duct Fans 369-373
Inspection Mirrors 824
Instruments
AMPROBE 910
FLUKE 897, 899, 900, 906-913
Klein 906
PROVA 902
INSUGUARD 210, 211
Insulated Pipe 210, 211
Insulation 207, 208
Insulation Accessories 210, 211
Insulation Cladding 209
Insulation Mastic 802, 803
Insulation Protection 209
Insulation Tape / Cords 801
Insulation Tester 904, 905
INTERMATIC & GRASSLIN 691-695
Surge Protector & Compressor Defender 691, 692

J

JOHNSON CONTROLS
Defrost Control 585
Dual Acting Water Valves 615
Electronic Temperature Controls 578, 579
Fan Delay 585
Fan Speed Controls 602
Flow Switches 589
Line Voltage Thermostats 610
Oil Pressure Controls 591, 593, 601
Pneumatic Controls 569-574
Pressure Controls 590-600, 610-612
System 450 604-609
Temperature Controls 580-588
Variable Frequency Drives 603
Water Regulating Valves 613, 614, 615

K

KASON

Hinges 763-766
Latches & Strikes 767-769
KE2 Electronic Temperature Controls 575-577
KEEPRITE 180, 189-198
Klein
Carbon Monoxide Meter 906
Klein Tools
Thermal Imaging Camera 896
KLEIN Tools 827-835
KRYLON Spray Paint 788

L

Latches & Strikes 767-769
LAU Blower Wheels 720
LCBS Connect 646
Leak Detectors 807
Electronic 876
Gas 878
Liquid 800
Ultra Violet 878
Leak Lock 783, 784
LENOX
Tube Cutters 845
Limit Controls 682, 684
Lineset Duct Cover 550
Line Sets 549
Line Valves 344, 350
Line Voltage Monitors 731
Line Voltage Thermostats 610, 647-649
LITTLE GIANT Pumps 557-563
LITTLE GIANTS
Condensate Pumps 554-556
Loctite Thread Treatment Sticks 784
Low Ambient Control 630
Lubricants 803-805

M

MADOK
Cooling Coils 547
Evaporator Coils 548
Heating Coils 546
Magnehelic Gauges 862
Magnetic Check Valves 349
Magni-Check Valves 345
Manifold Gauge Sets 854-856
Manitowac Exact Drop In Condenser 355
Manometers 903
MARS
Contactors 688, 689
Media Filters 376
Megohmeter 904, 905
Meters - Clamp 907, 908
Micromet
Crystals/Plates 795, 797
Feeders 797
Milwaukee Tools
Flashlights 822
MILWAUKEE Tools 829
MILWAUKEE TOOLS 833-841
Accessories 839-841
Tube Cutters 844
M-Line Copeland Condensing Units 16-29
M-Line R-290 Condensing Units 27, 28
Modutrol Motors 664, 665
Motor Accessories 716, 717
Motorized Valves 663
Motor Protection 731
Motors 698
ELCO 705
EMERSON 712, 713
FASCO 702, 707, 708, 710
ROTOM 699, 700, 705, 706
Shafts 726
Motor Speed Controls 717, 736
Mufflers 352
Multimeters 909, 910

N

Natural Gas Ball Valves 231
NDL Industries 346
NDL INDUSTRIES
Filter Driers 239
Nitrogen 816
Nitrogen Purging 814, 815
Nitrogen Regulators 816
NU-AIR
Ventilation Systems 369-373
NU-CALGON
Air Purifiers 377
Chemicals 791-797
EasyDry 867
EasySeal 867
Insulation Products 801
Oil Cross Reference 947-950
Oil Refractometer 868
Oils 865
Pan-Spray Instant Leak Sealer and Patch Product 803
Pipe Repair Kit 786
Refrigerant Leak Sealant 867
Sprayers 794
Nut Drivers 835
Nuts 202
Nylon Fittings 223

O

Oil 865
Oil Filters 330
Oil Level Controls 328, 329
Oil Pressure Controls 591, 593, 601, 625
Oil Pumps 869
Oil Separators 367, 368
Oil Test Kits 866
Outdoor Condensing Units 154-164
Outdoor insulation 208
Oxygen 816

P

Packaged Terminal A/C 401-404
PACKLESS
  Coils 106
PACKLESS Condensers 353, 355
Pads 552
Pads, Concrete Vibration 229
PARAGON
  Defrost Controls 696, 697
  Electronic Defrost Control 697
PARKER
  Pressure Regulators 339-343
Pencil Driers 234
PERFECT AIRE
  Portable Air Conditioners 393
Permagum 801
PICO
  Cable Ties 761
Pilot Burners 657
Pilot Ignition Control 621
Pilot Ignition Module 661
Pipe Clamps 199, 200
Pipe Cleaners / Primers 227
Pipe Insulation 207, 208
Pipe Insulation Supports 210, 211
Pipe Repair Kit 786
Plastic Fittings/Cement 227
Plastic Tubing (Clear) 227
Pleated Filters 376
Pneumatic Controls 568-574
  HONEYWELL 565-568
  JOHNSON CONTROLS 569, 570-574
Pneumatic Tubing 569, 571
Pool Heaters 355
Pop-Up Filters 376
Portable Air Conditioners
  PERFECT AIRE 393
Potential Relays 744
Power Twist Plus, V-Belt 730
Press Fittings 245-247
Pressure Controls 590-601, 610-624
Pressure Gauges 860, 861
Pressure Regulators 339, 341, 342, 343
Pressure Relief Valves 347, 348
Pressure Safety Devices 347
Pressure Sprayers 794
Pressure Switches 374, 590-599, 600
PROCON Pump 564
Psychrometer Sling 890
PTACs 401-404
Pulleys 728, 729
Pull-Out Hose 238
PVC Braided Hose 227
PVC Pipe & Fittings 224, 225, 226

Q

Q Deck Hangers 201
Quick-Block Roof Pier 227
Quick Couplers 237

R

Radiant Heaters 543, 544
Rain Shields 717
RANCO
  Defrost Control 634
  Defrost Termination & Fan Delay 629
  Oil Pressure Controls 625
  Pressure Controls 623, 624
  Reversing Valves 633
  Temperature Controls 622-636
Reach-In Coils 116, 180
Receivers 360, 362, 363
Reclaim/Recovery Cylinders 872
Recorder
  Humidity 882, 883
  Temperature 882-884
Recovery Fill Switch 872
Recovery Units 869-871
Reddi-rod 202
References 919
  Bluon General Replacement Guide 932
  Canada Regulations on Refrigerants 929
  Capillary Tubing Sizing Chart 952, 953, 954
  Chemours Line Sizing 933-940
  Conversion Factors 920, 921, 922
  Formulas 925, 926
  Gears & Belt Lengths 927
  Pressure-Temperature Chart 930, 931
  Quick Selection Guide 923, 924
  Refrigerant Piping Guide (929-933) 942
  Temperature Conversion Chart 928
  Weights of Refrigerant

NU-CALGON Refrigeration Oil Cross Reference Guide
934-937 951
REFPLUS 116-132
Air Cooled Condensers 131
Air Cooled Condensing Units 128-130
CO2 Gas Coolers & Evaporators 132
Fluid Coolers 131
Refractometer 868
Refrigerant Charging Scales 875
Refrigerant Leak Sealant 867
Refrigerant Log Kit 918
Refrigerants 14
Refrigerant Test Kits 868
Refrigeration Hardware 767-770
Refrigeration Oil 865
Refrigeration Oil Cross Reference 947-950
REFRIGERATION RESEARCH
Receivers 360
Suction Accumulators 351, 352
Regulators 816
Relays 655, 742-748
RELECO Relays 747, 748
Respirators 916
Reversing Valves 633
REZNOR
Unit Heaters 541, 542
RLS Fittings 245, 246, 247
Rod Couplers 202
Roof Pier 227, 228
Room Air Conditioners 394-406
Rotalock Valves 357
ROTOM Motors 699-706
Run Capacitors 739

S

SAFEGUARD Refrigerant Log Kit 918
Safety Products 915-918
SAGINOMIYA Pressure Controls 619, 620
SAMSUNG
DVM S Eco Systems 514
Hylex 488-490
Multi Zone 496-504
Single Zone 491-495
Light Commercial Systems 505-512
VRF Systems 513
Sandcloth 818
SANUVOX Air Purifiers 378-380
Scale Remover 796, 797
Scales 875
SCHRADER
Core torque driver 232
Torque driver 232
Torque wrench 232
Schrader Fittings 235
Screw Compressors 79-82
Screwdrivers 834, 835
Scroll Compressors 53-55
Sealers 782-803
Sealing Strips 772, 773
Seismic Brackets and Restraints 203
Semi-Hermetic Compressors 76-78
Shafts 726
Sheet Insulation 207
Sheet Metal Tools 843
Shur-Fit 209
Shut-off Valves 344, 350
Sil-Fos 819
HARRIS 817
Silica Gel 788
Silicone 787
Silver Solder 817
Sling, Psychrometer 890
Smoke Testers
QwikDetector 807
Soft Copper Tubing 206
Soft Starters 740
Solder 817-820
Solder-Free Fittings 245-247
Soldering Aids 821
Soldering Gases 816
Soldering Tools 818
Solderless Fittings 245-247
Solenoid Coils 343
Solenoid Valves 287-300
Solenoid Valves & Coils 338, 339
SOLER & PALAU Air Fans 718, 719
Solvents 799
Sound Blankets 40
SPECTROLINE Ultra Violet Leak Detectors 878
Speed Controls 717
SPORLAN
3-Way Valves 296
Acid Test Kits 866
CDA Valves 318-327
CPR Valves 308-311
Discharge Bypass Valves 301-304
Distributors 331-333
Driers 277-285
Electronic Temperature Control System 318-327
EPR Valves 312-317
Head Pressure Control Valves 305-307
Liquid Line Ratings And Selection Recommendations 274-276

Nomenclature 248, 249
Oil Filters 330
Oil Level Controls 328, 329
Q Series TEV 270
Replacement Parts 251, 271, 272
Sight Glass 286
Solenoid Valves 287-300
Suction Filters 280
TEV AWEF Factors 262, 263, 264, 265, 266
TXV 250-273
Wireless Smart Service Tool Kit 856
Sprayers 794
Spray Paint 788
Spring Isolators 204
Start Capacitors 738
Steel Pipe Fittings 231
STREAMLINE 346, 349
Suction Accumulators 351, 352
SUPCO
Defrost Timers 690
Hard Start Kits 741
Oil Additive 868
Recorders 884
Temperature Alarms 885, 886
Super Hose, JOHNSON CONTROLS 593
SUPERIOR
Pressure Relief Valves 348
Valves 344, 345
Surefire Torch 809, 810
SURE-START Soft Starters 740
Surge Protector & Compressor Defender 691, 692
Swaging Tools 849
SWEP
Brazed Plate Heat Exchangers 359
Switches, Electrical 374, 749, 750
System 450 JOHNSON CONTROLS 604-609
System Pro Compressors 43-47

T

Tachometer 902
Tank Racks 873
Tape 808
TAYLOR Thermometers 890, 891
TECUMSEH
Coils 106
Compressors 83, 84, 85
Condensing Units 86-105
Teflon 781-784
Temperature Alarms 885, 886
Temperature Controls 570-588, 616, 617, 626-635, 643-651, 680-684
Temperature/Pressure Controls 616, 617
Temperature Probe
COOPER 901
FLUKE 899, 900
Temperature Recorder 882-884
Temperature Testers 893, 898
Test Plugs 850
Thermal Camera 896
Thermal Imaging Camera 896
Thermocouples 657
Thermometers 887-897
Digital 897
Infrared 894, 895
Pocket 892
Thermopiles 658
THERMOPLUS
Air Cooled Condensers 392
Dehumidifiers 390, 391
Water Cooled Air Conditioners 386, 387, 388, 389
Thermostat Guards 636, 637
Thermostatic Expansion Valves 250-273
Thermostats 676-679, 641-643
Thermo-Trap 821
Thimbles 552
Thru-The-Wall A/C 398, 399, 400
Thru-The-Wall Fans 718, 719
Tie Straps 761
Time Clocks 693-697
Time Delays 732, 733
Tool Bags/Boxes/Totes 825, 826
Tools 818-828
Torpedo Levels 833
TRACPIPE Flexible Gas Piping 230
Transformers 653, 654
Traps Plastic 224-226
Trouble Light 758
Tube Benders 846
Tube Cutters 844, 845
Tube Strap 200
Tubing 571
Copper 206
Plastic/PVC 224, 225, 226, 227
Tubing Cover 550
TURBOTORCH 809-811, 813, 816, 821
Tank Totes 813

U

Ultra Violet Air Purifiers 378-380
Ultra Violet Leak Detectors 878
Unistrut 199
Unit Coolers
BOHN 133-153
KEEPRITE 180

REFPLUS 116-127
Unit Heaters
ADP 539, 540
ALLIED
ALLIED COMMERCIAL 537, 538
Unit Heaters, REZNOR 541, 542
Unit Support Roof 227, 228

V

Vacuum Gauges 858, 859
Vacuum Pump Oil 874
Vacuum Pumps 874
Valve Core Removers 232
Valves
Ball 346
Check 345
Receiver 350
Rotalock 357
Solenoid 287-296
TEV 262-270
TXV 250-273
Water Regulating 613
Vapor Proof Lights 770
Variable Frequency Drives 603
Varifix Cold Controls 628
V-Belts 730
Vehicle Equipment 873
Ventilation Controls 645
Vibration
Eliminators (Pipe) 238
Pads 229
Vibration Absorbers 204, 238
Vibrazorbers 238
Vinyl Tubing 227

W

Walk-In Coils 119-127
Wall Mount Air Conditioners & Heat Pumps 405, 406
Washers 202
Water Cooled Air Conditioners 386-389
Water Cooled Condensing Units 25-34
Water Hose Fittings 223
Water Pumps 557-563
Water Regulating Valves 613-615
Water Source Heat Pumps 384, 385
Water Treatment Products 797, 798
WEISS Thermometers 889
WHITE-RODGERS
Air Switch 681
Bimetal Limits Thermostats 683
Fan Centers 680
Gas Valves 685
Hot Surface Ignition Controls 681
Temperature Controls 680-684
Thermostats 676-679
Window Air Conditioners 394-397
WINTERS
Thermometers 889
WINTERS Gauges 861
Wipers 790
Wire 751, 752
Wire Rope 203
Wire Ties 761, 762
Wrenches 830

X

Y

YELLOW JACKET
Charging Hoses 863, 864
Hoses - Pressure Control 601
Manifolds 856, 860
Recovery Units 870
Vacuum Pumps 874

Z

Zap Straps 761
Zerol Oil 865
Zip Ties 761
Zoomlock fittings 245-247

REFRIGERATIVE SUPPLY LIMITED PRODUCT PORTFOLIO

HVAC

AIREASE™ Built for life. Yours.	• Residential Heating and A/C	***www.airease.com***
Ducane AIR CONDITIONING AND HEATING	• Residential Heating and A/C	***www.ducanehvac.com***
ALLIED Commercial	• Commercial Rooftops • Unit Heaters	***www.allied-commercial.com***
magicpak	• All-In-One HVAC Systems	***www.magic-pak.com***
DAIKIN	• Residential Heating & A/C • Commercial Rooftops • Ductless Split A/C & H/P • VRV • IAQ	***www.northamerica-daikin.com***
SAMSUNG	• Ductless Split A/C & H/P • Air to water chillers • VRF	***www.samsunghvac.com***
FRIEDRICH	• PTAC/VTAC • Window A/C • Dehumidifiers • Portable A/C	***www.friedrich.com***
Comfort-Aire	• Window A/C • Water Source H/P	***www.comfort-aire.com***
QUANTECH	• High Performance Chillers	***www.quantech-hvac.com***
MOVINCOOL	• Commercial Portable Air conditioners	***www.movincool.com***
THERMOPLUS® AIR	• Water Cooled A/C & H/P • Console Models • Condensing Units • Pool Dehumidifiers	***www.thermoplus.com***
ClimateMaster	• Commercial WSHP • Residential Geothermal	***www.climatemaster.com***
Rheem	• Gas/Electric – Electric/Electric (3-30 ton) • Stainless Steel HX Standard on stocked units • Heat Pump W/ Electric Backup (2-20 ton)	***www.rheem.com/products/commercial/heating-and-cooling/***
Hisense HVAC	• Ductless Split H/P • Residential H/P	***www.hisensecomfort.com/professionals/index.aspx***
FRESHAIRE UV The Indoor Air Quality Expert	• HVAC Coil Disinfection • HVAC Airborne (Duct) Disinfection • Surface (Room) Disinfection • Odour Reduction Options – APCO Rack • Sizing & Selection Assistance Available	***www.freshaireuv.com/commercial***
SANUVOX	• UV Air Purifiers	***www.sanuvox.com***
REZNOR®	• Makeup Air • Unit Heaters	***www.reznorhvac.com***
STERLING HVAC PRODUCTS	• Unit heaters • Rooftop/Indoor Makeup units	***www.sterlinghvac.com***
infrasave	• Air Curtains • Commercial Heaters • Residential Heaters	***www.infrasave.com***
THERMOLEC	• Electrical heating equipment • Modulating controls • Steam humidifiers.	***www.thermolec.com***
nu-air	• Residential & Commercial ERVs & HRVs	***www.nu-airventilation.com***
fantech	• Makeup Air Systems • Dryer Exhaust Solutions • Residential • Commercial	***www.fantech.net***
ADP	• Evaporators • Air Handlers • Unit Heaters	***www.adpnow.com***
GREAT LAKES COPPER	• HVAC/R Copper Tube	***www.glcopper.ca***
resideo	• Thermostats • Controls • IAQ • Zoning	***www.resideo.com***
Chemours™	• Refrigerants	***www.chemours.com***
ALLTEMP	• Motors and Replacement Parts	***www.alltemp.ca***
Filtration Group	• Filters for Residential & Commercial HVAC Filtration	***www.filtrationgroup.com***
Nu-Calgon Wholesaler, Inc.	• Chemicals • Insulation Products • Oils • Everpure Water Filters	***www.nucalgon.com***
SPINNAKER	• ERV • Custom AHU's	***www.spinnakerindustries.com***
Madok MANUFACTURING LIMITED	• HVAC/R Equipment • Replacement Coils • Protective Coatings	***www.madok.com***
anden	• Dehumidifiers	***www.anden.com***
First Co.	• VTEC • Fan Coils	***www.firstco.com***
Honeywell	• Building Management Solutions	***www.buildings.honeywell.com***
CDI	• Commercial HVAC curbs & adapters	***www.cdicurbs.com***
RECTORSEAL	• HVAC • Plumbing • Electrical • Firestopping	***www.rectorseal.com***
Little GIANT	• Main line of condensate pumps (HVAC)	***www.littlegiant.com***

REFRIGERATIVE SUPPLY LIMITED PRODUCT PORTFOLIO

REFRIGERATION

BOHN	• Equipment • Commercial Refrigeration & Air Handlers • Supermarket Specialists	***www.heatcraftrpd.com***
KeepRite Refrigeration	• Equipment • Commercial Refrigeration & Air Handlers • Heat Reclaim	***www.k-rp.com***
RefPlus	• Equipment • Custom Refrigeration Products • Dry & Adiabatic fluid coolers • CO2 Condensing units	***www.refplus.com***
Magna	• Large-capacity cold storage equipment for industrial refrigeration	***www.heatcraftrpd.com***
CellarCool	• Wine Cellar Cooling System Solutions	***www.cellarcool.com***
Chemours	• Refrigerants	***www.chemours.com***
Honeywell	• Refrigerants	***www.honeywell.com***
Danfoss	• Controls • Regulating Valves	***www.danfoss.com***
Sporlan	• Expansion Valves • Driers • Heat Reclaim Valves • Liquid Level Controls	***www.parker.com***
KE2 thermsolutions	• Temperature controls; conventional and efficiency • Demand defrost controls • Condenser VFD Fan Controls • Compressor sequencing controls	***www.ke2therm.com***
Johnson Controls	• Temperature/Pressure Control	***www.johnsoncontrols.com***
Ranco	• Temperature/Pressure Control	***www.robertshaw.com***
dixell	• Electronic Regulation & Controls	***www.copeland/com/en-ca/brands/dixell***
Ecotherm	• Thermostats • Controls • Sensors	***www.ecotherm.ca***
Penn	• Temperature/Pressure Control	***www.penncontrols.com***
Regal Rexnord	• Replacement Motors	***www.regalrexnord.com***
Copeland	• Commercial Refrigeration • Condensing Units and Compressors • Controls • CO_2 Compressors	***www.copeland.com/en-ca***
Bitzer	• Compressors • Condensing Units • Receivers	***www.bitzer.de***
Tecumseh	• Compressors • Parts • Indoor and Outdoor Condensing Units	***www.tecumseh.com***
embraco	• Compressors • Cooling Solutions	***www.embraco.com***
NORBEC	• Walk-in Coolers & Freezers	***www.norbec.com***
Coldmatic	• Insulated Panel & Door Systems	***www.coldmatic.com***
Great Lakes	• HVAC/R Copper Tube	***www.glcopper.ca***
ALLTEMP	• Motors and Replacement Parts	***www.alltemp.ca***
NDL	• Copper Fittings and Valves	***www.ndlinc.com***
Nu-Calgon	• Chemicals • Insulation Products • Oils • Everpure Water Filters	***www.nucalgon.com***
armacell	• Piping Insulation	***www.armacell.us***
MARS	• Motors and Replacement Parts	***www.marsdelivers.com***
KASON	• Refrigeration Hardware	***www.kasonind.com***
Paragon	• Time Clocks	***www.robertshaw.com***
sureseal	• Refrigeration Gaskets	***www.sureseal.ca***

18 BRANCHES AND 4 DISTRIBUTION CENTRES IN WESTERN CANADA TO SERVE YOU!

VISIT US AT WWW.RSL.CA

Updated: September 2024

REFRIGERATIVE SUPPLY LIMITED
PRODUCT PORTFOLIO

TOOLS

Fieldpiece
YELLOW JACKET
INFICON
TurboTorch
Milwaukee
Appion
hilmor
DIVERSITECH
Imperial
FLUKE
KLEIN TOOLS
testo
JB JUST BETTER
VETO PRO PAC TOOL BAGS THAT WORK
Cooper ATKINS
Supco
BACHARACH
RLS
STERLING
WATSON GLOVES Quality since 1918
Zebra Instruments
SPECTROLINE SPECIALTY

and many more.

REFRIGERANTS

Refrigerants

Refrigerative Supply provides a wide variety of refrigerant choices to satisfy regulatory compliance standards and responsively meet the needs of our customers.



Refrigerant	Container	Net Weight (kg)	Deposit (net)	Lubricant Options
R448A (N40)	SRC Cylinder	10.9 45.4	120.00 200.00	POE
R449A (XP40)	SRC Cylinder	13.5	120.00	POE
R407A	SRC Cylinder	11.3	120.00 200.00	POE
R407C	SRC Cylinder	13.2 52.2	120.00 200.00	POE
R407F	SRC Cylinder	11.3	120.00	POE
R508 (SUVA 95)	Cylinder	4.5	130.00	POE
RSI-R22	SRC Cylinder	13.6 58.0	120.00 200.00	POE
R404A (HP62)	SRC Cylinder	10.9 45.4	120.00 200.00	POE
R507 (AZ50)	SRC Cylinder	11.3 45.4	120.00 200.00	POE
R410A (AZ20)	SRC Cylinder	11.3 45.4	120.00 200.00	POE
R437A (MO49)	SRC Cylinder	13.6 58.0	120.00 200.00	MO,AB,POE
R422A (MO79)	SRC Cylinder	14.9	120.00	MO,AB,POE
R438A (MO99)	SRC Cylinder	11.35 49.9	120.00 200.00	MO,AB,POE
R458A (BLUON™)	SRC Cylinder	13.6	120.00	MO,AB,POE
R513A	SRC Cylinder	13.62 56.75	120.00 200.00	POE

WALK-IN BOX MANUFACTURING REQUIREMENT

What is considered a walk-in cooler or freezer (WICF)?

- Any walk-in structure intended for storing food goods below 0 degrees Celsius (Freezer) or between 0 and 13 degrees Celsius (Cooler)
- The square footage of the WICF unit is under 3,000 sq. ft.
- The WICF unit is not intended for lab, research or environmental usage.

Main impact for our customers:

- Minimum R Value for cooler and freezer panels will be as follows:

Panel	Minimum R value* required	Panel thickness needed to meet the requirement
Cooler temperature panels	25	4 inches
Freezer temperature panels	32	

- WICF door energy consumption must not exceed certain values

Manufacturer's Energy Efficiency Build Requirements for refrigeration system equipment

Equipment class	Minimum AWEF (Btu/W-h)*	Compliance date: equipment manufactured starting on...
Dedicated Condensing System—Medium, Indoor	5.61	January 1, 2020
Dedicated Condensing System—Medium, Outdoor	7.60	January 1, 2020
Dedicated Condensing System—Low, Indoor with a Net Capacity (q_{net}) of:		
< 6,500 Btu/h	$9.091 \times 10{-}5 \times q_{net} + 1.81$	July 10, 2020
≥ 6,500 Btu/h	2.40	
Dedicated Condensing System—Low, Outdoor with a Net Capacity (q_{net}) of:		
< 6,500 Btu/h	$6.522 \times 10{-}5 \times q_{net} + 2.73$	
≥ 6,500 Btu/h	3.15	
Unit Cooler—Medium	9.00	
Unit Cooler—Low with a Net Capacity (q_{net}) of:		
< 15,500 Btu/h	$1.575 \times 10{-}5 \times q_{net} + 3.91$	
≥ 15,500 Btu/h	4.15	

**Where q_{net} is net capacity as determined in accordance with §431.304 and certified in accordance with 10 CFR part 429.*

M-LINE CONDENSING UNITS

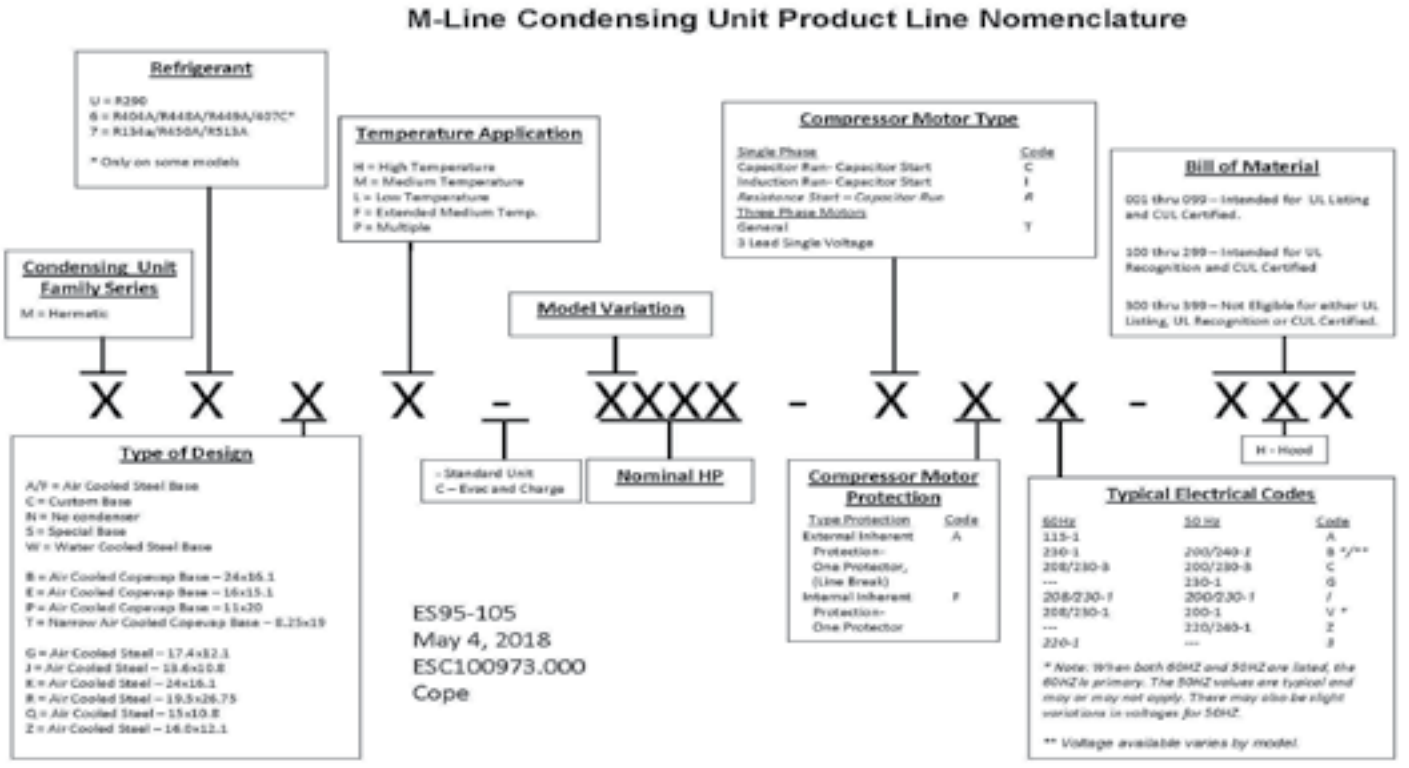

Features	Steel Base Standard BOMs				Condensate Base Standard BOMs						R-290 Units
	Air Cooled		Water Cooled	Dual Fan	E-Base		T-Base		B/P Bases		
	177	179	020	072	103	111	108	118	177	179	173
Receiver W/ Valve	X		X	X	X			X	X		
Suction Valve	X	X	X	X	X	X			X	X	
Liquid Base Valve		X				X				X	
Fan Guard	X	X		X			X	X	X	X	X
End Covers				X			X	X			X
Conduit			X	X							
Power Cord	X	X			X	X	X	X	X	X	X
Pressure Control (EUC) Adjustable Low, Fixed High			X	X							
Filter Drier	X	X		X					X	X	X
Moisture Indicator	X			X					X		
Water Valve			X								
UL Listed			X	X							
UL Recognized	X	X			X	X	X	X	X	X	X

Optional BOMs						
	020	028*	212	072	078*	272
Receiver W/ Valve	X	X	X	X	X	X
Suction Valve	X	X	X	X	X	X
Fan Guard	X	X	X	X	X	X
End Covers	X	X	X	X	X	X
Power Cord						
Filter Drier				X	X	X
Moisture Indicator				X	X	X
Pressure Control (EUC) Adjustable Low, Fixed High	X			X		
Conduit	X	X	X	X	X	X
UL Listed	X	X		X	X	
UL Recognized			X			X

*** Units with a compressor RLA under 6A do not require pressure controls for UL listing. xx8 will identify units under 6A that are listed, but do not have pressure controls.**

- Stock units are the 072 build.

** 072 build medium temp does not include accumulator, low temp complete with accumulator.*

F-LINE CONDENSING UNITS

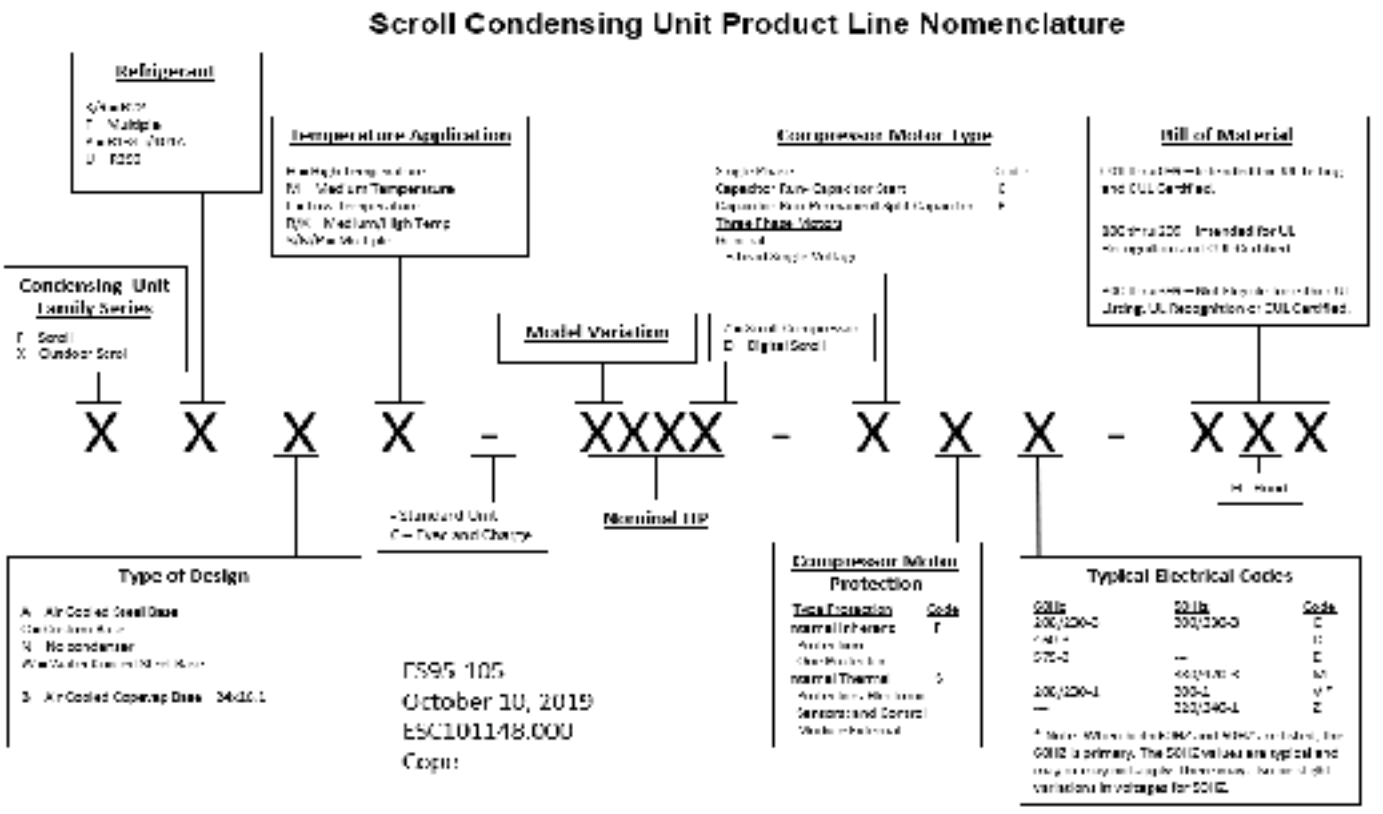

BOM	Options																UL	
	Receiver W/ Valve	Suction Valve	Liquid Base Valve	Fan Guard	End Covers	Conduit	Power Cord	Accumulator	Fan Cycling	Pressure Controls	Filter Drier	Moisture Indicator	Solenoid Valve	Crankcase Heater	Head Pressure Control Valve	Water Valve	CoreSense	Listed	Recognized
Air Cooled																			
071	X	X		X	X	X		X	X	X	X	X		X				X	
072	X	X		X	X	X		X*		X	X	X						X	
075	X	X		X	X	X		X^		X	X	X		X	X			X	
Water Cooled																			
020	X	X				X				X				X		X		X	

* Accumulator available on FFAL units for -072 BOM

^ Accumulator included on dual fan FFAM/FFAP units and all FFAL units for -075 BOM

M-LINE AIR COOLED CONDENSING UNITS

Air Cooled												
					Refrigerant Connections^		Receiver Capacity* (Lbs @ 90% Volume)					Max Over-current
Unit Model	Compressor	Length	Width	Height	Liquid	Suction	R-134a	R-407C	R-448/449	R-513	MCA	Protection
M6GL-H079-CFA	RFT26C1E	18.86	14.34	11.79	3/8	1/2		1.4	1.4		15.1	20
M6GL-H079-CAV	RFT26C1E	18.86	14.34	11.79	3/8	1/2		1.4	1.4		9	15
M6GP-H064-CAA	RST45C1E	18.86	14.34	11.79	3/8	1/2		1.4	1.4		14.8	20
M6GP-H064-CAV	RST45C1E	18.86	14.34	11.79	3/8	1/2		1.4	1.4		7.6	15
M6GP-H074-CFA	RST55C1E	18.86	14.34	11.79	3/8	1/2		1.4	1.4		20.5	30
M6GP-H074-CAV	RST55C1E	18.86	14.34	11.79	3/8	1/2		1.4	1.4		9.5	15
M6GP-H090-CAV	RST64C1E	18.82	14.34	12.29	3/8	1/2		1.4	1.4		12.3	20
M6GP-H090-CFA	RST64C1E	18.82	14.34	12.29	3/8	1/2		1.4	1.4		20	30
M6JL-0021-IAA	AFE08C4E	14.10	11.45	11.37	1/4	3/8		1.4	1.4		5.5	15
M6JL-H030-IAA	AFE11C4E	14.11	11.45	11.37	1/4	3/8		1.4	1.4		5.9	15
M6JL-H038-1AA	AFE17C4E	14.39	11.57	11.37	1/4	3/8		1.4	1.4		10.4	15
M6JL-H052-IAA	AFE20C5E	14.40	11.45	11.37	1/4	3/8		1.4	1.4		8.5	15
M6JM-0017-IAA	ASE12C4E	14.10	11.45	11.37	1/4	3/8		1.4	1.4		5.7	15
M6JM-H023-IAA	ASE14C4E	14.11	11.45	11.37	1/4	3/8		1.4	1.4		6.7	15
M6JM-H028-IAA	ASE20C4E	14.11	11.45	11.37	1/4	3/8		1.4	1.4		8.2	15
M6JM-H043-CAV	ASE28C5E	14.39	11.57	11.37	1/4	3/8		1.4	1.4		9.7	15
M6KL-0123-CFA	ASE28C5E	14.39	11.57	11.37	1/4	3/8		1.4	1.4		5.6	15
M6JM-H043-IAA	ASE39C5E	14.40	11.45	11.37	1/4	3/8		1.4	1.4		13.2	20
M6KL-0123-CFV	RFT42C1E	24.00	16.39	13.08	3/8	1/2		3.1	3		11.2	15
M6KP-0075-CFA	RST55C1E	24.00	16.41	13.08	3/8	1/2		3.1	3		20.8	30
M6KP-0075-CAV	RST55C1E	24.00	16.39	13.08	1/4	1/2		3.1	3		9.7	15
M6KP-0092-CAV	RST64C1E	24.00	16.39	13.08	1/4	1/2		3.1	3		12.4	20
M6KP-0092-CFA	RST64C1E	24.00	16.39	13.08	3/8	1/2		3.1	3		20.3	30
M6KP-0095-CFV	RST70C1E	24.00	16.39	13.08	3/8	5/8		3.1	3		10.8	15
M6KP-0102-CAV	RST64C1E	24.00	18.42	16.16	3/8	1/2		5.3	5.1		12.7	20
M6KP-0102-CFA	RST64C1E	24.00	18.30	16.16	3/8	1/2		5.3	5.1		20.7	30
M6KP-0112-CFV	RST70C1E	24.00	18.45	16.16	3/8	5/8		5.3	5.1		11	15
M6KP-0112-TAC	RST70C1E	24.00	18.33	16.16	3/8	5/8		5.3	5.1		8.3	15
M6KP-0127-CFV	RST80C1E	24.00	18.45	16.16	3/8	5/8		5.3	5.1		13	20
M6KP-0127-TAC	RST80C1E	24.00	18.33	16.16	3/8	5/8		5.3	5.1		8.5	15
M6KP-0142-CFV	RST97C1E	24.00	18.45	16.16	3/8	5/8		5.3	5.1		13.9	20
M6QM-H049-CAV	ASE39C5E	15.66	12.01	11.37	1/4	3/8		1.4	1.4		7.7	15
M6QM-H049-IAA	ASE39C5E	15.67	12.12	11.37	1/4	3/8		1.4	1.4		13.4	20
M6ZL-0031-IAA	AFE11C4E	16.17	13.38	11.73	1/4	3/8		1.4	1.4		6.1	15
M6ZL-0042-IAA	AFE14C5E	16.51	12.68	11.73	1/4	3/8		1.4	1.4		8.4	15
M6ZL-0055-IAA	AFE20C5E	16.51	12.68	11.73	1/4	3/8		1.4	1.4		8.8	15
M6ZM-0025-IAV	ASE20C4E	16.51	12.68	11.73	1/4	3/8		1.4	1.4		4.4	15
M6ZM-0032-IAA	ASE24C5E	16.51	12.68	11.73	1/4	3/8		1.4	1.4		8.6	15
M6ZM-0038-IAA	ASE28C5E	16.51	12.68	11.73	1/4	3/8		1.4	1.4		9.9	15
M6ZM-0038-IAV	ASE28C5E	16.51	12.68	11.73	1/4	3/8		1.4	1.4		5.6	15
M6ZM-0048-IAA	ASE39C5E	16.51	12.68	11.73	1/4	3/8		1.4	1.4		13.4	20
M6ZM-H035-1AA	ASE20C4E	16.52	12.79	11.71	1/4	3/8		1.4	1.4		7.8	15
M6ZM-H054-CAV	ASE39C5E	16.58	12.79	11.71	1/4	3/8		1.4	1.4		7.7	15
M6ZP-0053-IAA	RST45C1E	17.36	13.52	11.75	3/8	1/2		1.4	1.4		14	20
M6ZP-0053-IAV	RST45C1E	17.36	13.55	11.75	3/8	1/2		1.4	1.4		7.2	15
M6ZP-H059-CAV	RST45C1E	17.36	13.45	11.75	3/8	1/2		1.4	1.4		7.2	15
M6ZP-H059-CAA	RST45C1E	17.36	13.5	11.75	3/8	1/2		1.3	1.4		7	15

M-LINE AIR COOLED CONDENSING UNITS

					Air Cooled							
					Refrigerant Connections^		Receiver Capacity* (Lbs @ 90% Volume)					
Unit Model	Compressor	Length	Width	Height	Liquid	Suction	R-134a	R-407C	R-448/449	R-513	MCA	Max Over-current Protection
M7GH-H057-CFA	RRT64C1E	18.86	14.34	11.79	3/8	1/2	1.5			1.5	15.5	20
M7JH-0012-IAA	ARE13C4E	14.10	11.45	11.37	1/4	3/8	1.5			1.5	5.9	15
M7JH-0014-IAA	ARE17C4E	13.91	11.46	9.61	1/4	3/8	1.5			1.5	6.2	15
M7JH-0018-IAA	ARE25C4E	14.10	11.45	11.37	1/4	3/8	1.5			1.5	6.8	15
M7JH-H029-IAA	ARE35C5E	14.39	11.57	11.37	1/4	3/8	1.5			1.5	9.3	15
M7JP-0020-IAA	AFF07C1E	14.37	12.11	11.38	1/4	3/8	1.5			1.5	5.9	15
M7JP-0029-IAA	AFF10C1E	14.37	12.11	11.38	1/4	3/8	1.5			1.5	4.9	15
M7KH-0060-CAV	RRT64C1E	24.00	16.39	13.08	1/4	1/2	3.3			3.2	9.2	15
M7KH-0064-CAV	RRT73C1E	24.00	16.39	13.08	1/4	1/2	3.3			3.2	11.8	15
M7KH-0075-CFV	RRT81C1E	24.00	16.39	13.08	3/8	5/8	3.3			3.2	9.3	15
M7KH-0086-CFA	RRT10K1E	24.00	16.39	13.08	3/8	5/8	3.3			3.2	19	30
M7KH-0086-CFV	RRT10K1E	24.00	16.39	13.08	3/8	5/8	3.3			3.2	11.2	15
M7KH-0096-CFA	RRT10K1E	24.00	18.30	16.16	3/8	5/8	5.7			5.4	19.4	30
M7KH-0096-CFV	RRT10K1E	24.00	18.45	16.16	3/8	5/8	5.7			5.4	11.4	15
M7ZH-H046-IAA	RRT62C1E	17.45	13.46	11.71	3/8	1/2	1.5			1.5	12.8	20
M7ZH-H046-IAV	RRT62C1E	17.45	13.46	11.71	3/8	1/2	1.5			1.5	6	15
M7ZH-H055-CAV	RRT64C1E	17.36	13.45	11.75	3/8	1/2	1.5			1.5	8.6	15
M7ZH-H067-CFA	RRT81C1E	17.31	13.82	12.29	3/8	5/8	1.5			1.5	17.1	25
M7ZH-H067-CFV	RRT81C1E	17.31	13.81	12.29	3/8	5/8	1.5			1.5	8.7	15
M7ZP-0041-IAA	AFE12C4E	16.51	12.68	11.73	1/4	3/8	1.5			1.5	9	15
M7ZP-H062-CFA	RFT18C1E	17.32	13.82	12.29	3/8	1/2	1.5			1.5	13	20

^I.D. Sweat. Connections listed for -177 BOMs. See OPI for connections for other specific BOMs

*Reciever capacity applies only to units with receivers. See BOM Matrix for included components.

Chassis Sizes

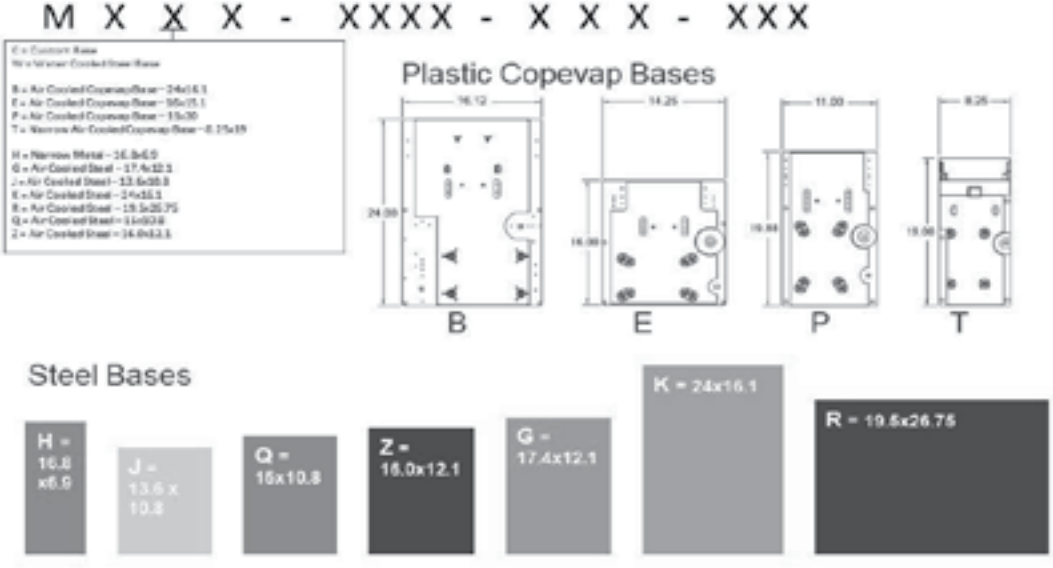

M-LINE AIR COOLED CONDENSING UNITS

Copeland M-Line Air Cooled Condensing Units
Medium Temp & High Temp

Medium - High Temp / Air Cooled					90° Ambient								
Nom. HP	Model	Refrigerant			BTU/Hr SST, 40°F RG (65°F RG in Bold and Blue Highlight)								
			-5	0	5	10	15	20	25	30	35	40	45
1/8	M7JH-0012	R-134a		**604**	**695**	**794**	**902**	**1020**	**1150**	**1280**	**1430**	**1590**	**1750**
		R-513		**669**	**760**	**858**	**963**	**1080**	**1200**	**1330**	**1470**	**1620**	**1770**
	M7JH-0014	R-134a		**748**	**855**	**970**	**1100**	**1230**	**1380**	**1530**	**1700**	**1870**	**2060**
		R-513		**829**	**934**	**1050**	**1170**	**1300**	**1430**	**1580**	**1730**	**1900**	**2070**
1/5	M6JM-0017	R-407C		876	989	1110	1240	1380	1530	1690			
		R-448A/R-449A	792	907	1030	1160	1290	1430	1590	1740			
	M7JH-0018	R-134a		**1020**	**1160**	**1310**	**1470**	**1640**	**1820**	**2020**	**2230**	**2450**	**2690**
		R-513		**1130**	**1260**	**1400**	**1550**	**1710**	**1890**	**2070**	**2260**	**2460**	**2670**
	M6JM-H020	R-407C		916	1050	1200	1370	1550	1740	1960			
		R-448A/R-449A	815	952	1100	1250	1420	1590	1780	1970			
1/4	M6JM-H023	R-448A/R-449A	1010	1160	1320	1490	1670	1870	2070	2300			
	M6ZM-0025	R-448A/R-449A		1530	1760	1990	2220	2460	2720	3010			
	M6JM-H028	R-407C		1500	1720	1960	2220	2500	2810	3150			
		R-448A/R-449A		1510	1730	1940	2150	2370	2600	2860			
	M7JH-H029	R-134a		**1450**	**1640**	**1860**	**2100**	**2360**	**2640**	**2930**	**3240**	**3570**	**3920**
		R-513		**1560**	**1770**	**2010**	**2260**	**2530**	**2810**	**3100**	**3400**	**3710**	**4020**
1/3	M6ZM-0032	R-448A/R-449A	1470	1670	1900	2140	2410	2690	2990	3320			
	M6ZM-0038	R-448A/R-449A	1850	1990	2190	2440	2750	3110	3520	3990			
1/2	M7ZH-0041	R-134a		**1980**	**2260**	**2570**	**2890**	**3240**	**3600**	**3980**	**4380**	**4800**	**5230**
		R-513		**2200**	**2450**	**2740**	**3060**	**3390**	**3750**	**4120**	**4510**	**4900**	**5300**
	M6JM-H043	R-407C					4710	5060	5400				
		R-448A/R-449A	2450	2530	2750	3070	3450	3850	4250	4620			
	M7ZH-H046	R-134a	**2100**	**2380**	**2690**	**3030**	**3400**	**3790**	**4210**	**4640**	**5090**	**5550**	**6020**
		R-513	**2290**	**2570**	**2880**	**3230**	**3610**	**4020**	**4440**	**4870**	**5310**	**5750**	**6190**
	M6ZM-0048	R-448A/R-449A	2520	2630	2890	3240	3670	4120	4580	5000			
	M6QM-H049	R-448A/R-449A	2470	2560	2790	3110	3500	3900	4310	4670			
		R-407C					4790	5130	5480				
	M6ZP-0053	R-407C			2700	3070	3470	3910	4360	4840			
		R-448A/R-449A	2280	2610	2960	3320	3720	4140	4590	5070			
	M6ZM-H054	R-448A/R-449A	2450	2830	3220	3610	3990	4370	4730	5070			
	M7ZH-H055	R-134a		**2900**	**3270**	**3680**	**4130**	**4590**	**5080**	**5570**	**6070**	**6570**	**7060**
		R-513		**2990**	**3380**	**3800**	**4250**	**4710**	**5180**	**5650**	**6130**	**6590**	**7040**
1/2+	M7GH-H057	R-134a	**2610**	**2950**	**3340**	**3780**	**4250**	**4760**	**5290**	**5850**	**6430**	**7020**	**7620**
		R-513	**2780**	**3160**	**3580**	**4040**	**4530**	**5050**	**5600**	**6170**	**6750**	**7350**	**7950**
	M6ZP-H059	R-407C			2920	3320	3760	4230	4730	5250			
		R-448A/R-449A	2370	2720	3090	3510	3950	4420	4930	5460			
	M7KH-0060	R-134a	**2620**	**2970**	**3360**	**3790**	**4260**	**4760**	**5290**	**5860**	**6440**	**7060**	**7690**
		R-513	**2800**	**3160**	**3570**	**4020**	**4500**	**5010**	**5550**	**6120**	**6700**	**7300**	**7910**
	M7ZP-H062	R-134a	2930	3310	3710	4110	4510	4930	5350	5780			
		R-513	3250	3680	4120	4560	5010	5470	5940				
	M6GP-H064	R-407C		2670	3050	3480	3960	4480	5040	5640			
		R-448A/R-449A	2460	2830	3240	3690	4180	4710	5290	5900			
	M7KH-0064	R-134a	**2850**	**3290**	**3760**	**4250**	**4770**	**5310**	**5890**	**6490**	**7130**	**7800**	**8490**
		R-513	**3040**	**3510**	**3990**	**4500**	**5040**	**5590**	**6170**	**6780**	**7400**	**8050**	**8710**
	M7GP-H066	R-134a	3060	3470	3890	4330	4780	5240	5710	6200			
		R-513	3370	3820	4290	4760	5250	5750	6260				
	M7ZH-H067	R-134a	**2890**	**3240**	**3690**	**4210**	**4800**	**5420**	**6070**	**6730**	**7400**	**8070**	**8720**
		R-513	**3000**	**3300**	**3730**	**4250**	**4850**	**5500**	**6180**	**6880**	**7600**	**8310**	

M-LINE AIR COOLED CONDENSING UNITS

Copeland M-Line Air Cooled Condensing Units Medium & High Temp

Medium - High Temp / Air Cooled			90° Ambient									
Nom. HP	Model	Refrigerant	BTU/Hr SST, 40°F RG (65°F RG in Bold and Blue Highlight)									
			-5	0	5	10	15	20	25	30	35	40	45
3/4	M6GP-H074	R-407C		3200	3680	4190	4730	5310	5920	6560			
		R-448A/R-449A	3020	3440	3910	4440	5030	5660	6340	7060			
	M6KP-0075	R-407C		**3370**	**3860**	**4380**	**4950**	**5550**	**6190**	**6870**	**7580**	**8330**	**9120**
		R-448A/R-449A	3040	3460	3940	4490	5090	5740	6430	7170			
	M7KH-0075	R-134a	**3060**	**3480**	**4000**	**4600**	**5270**	**5980**	**6720**	**7470**	**8230**	**8980**	**9700**
		R-513	**3180**	**3550**	**4050**	**4660**	**5340**	**6080**	**6850**	**7650**	**8450**	**9240**	**9990**
1	M7KH-0086	R-134a	**3840**	**4430**	**5040**	**5660**	**6290**	**6940**	**7610**	**8300**	**9010**	**9750**	**10500**
		R-450	**3370**	**3870**	**4410**	**4980**	**5580**	**6210**	**6860**	**7540**	**8230**	**8940**	**9660**
		R-513	**3980**	**4520**	**5110**	**5730**	**6370**	**7050**	**7760**	**8490**	**9240**	**10000**	**10800**
	M6GP-H090	R-407C			4790	5410	6060	6750	7470	8220			
		R-448A/R-449A	4020	4530	5090	5680	6310	6990	7720	8500			
	M6KP-0092	R-407C			4830	5470	6140	6850	7600	8380			
		R-448A/R-449A	4040	4570	5140	5740	6400	7100	7860	8670			
	M6KP-0095	R-407C			4900	5560	6230	6940	7670	8440			
		R-448A/R-449A	3990	4580	5180	5810	6460	7140	7830	8530			
	M7KH-0096	R-134a	**4060**	**4690**	**5370**	**6090**	**6870**	**7690**	**8550**	**9450**	**10400**	**11400**	**12400**
		R-513	**4210**	**4820**	**5480**	**6190**	**6960**	**7770**	**8640**	**9560**	**10500**	**11600**	**12600**
	M6KP-0102	R-407C		4580	5270	6020	6840	7720	8660	9680			
		R-448A/R-449A	4340	4950	5600	6330	7120	8000	8960	10000			
1 1/4	M6KP-0112	R-407C		4650	5370	6120	6930	7780	8710	9700			
		R-448A/R-449A	4500	5160	5860	6610	7410	8250	9140	10100			
	M6KP-0127	R-407C		5350	6170	7030	7940	8910	9950	11100			
		R-448A/R-449A	5180	5940	6760	7620	8540	9490	10500	11500			
1 1/2	M6KP-0142	R-407C		6030	6940	7900	8910	9990	11100	12400			
		R-448A/R-449A	5810	6620	7490	8410	9360	10300	11400	12400			

Additional models available. See OPI for a complete list

Copeland M-Line Air Cooled Condensing Units Low Temp

Low Temp / Air Cooled			90° Ambient									
Nom. HP	Model	Refrigerant	BTU/Hr SST, 40°F RG 90° Ambient									
			-30	-25	-20	-15	-10	-5	0	5	10	15
1/5	M7JP-0020	R-134a		524	614	714	825	946	1080	1220	1380	1540
		R-513		546	633	729	832	944	1060	1190	1320	1470
	M6JL-0021	R-448A / R-449A		615	692	785	891	1010	1140	1270	1410	1560
1/3	M7JP-0029	R-134a		783	919	1070	1230	1410	1600	1810	2020	2260
		R-513		815	949	1090	1250	1410	1580	1760	1950	2150
	M6JL-H030	R-448A / R-449A		710	812	935	1080	1230	1410	1590	1790	1990
	M6ZL-0031	R-448A / R-449A		710	814	940	1080	1250	1430	1620	1830	2040
1/3+	M7ZP-0041	R-134a		1020	1190	1380	1600	1850	2120	2400	2710	3030
		R-513		1110	1290	1510	1750	2010	2300	2610	2940	3290
	M6ZL-0042	R-448A / R-449A		1040	1180	1350	1530	1730	1950	2190	2440	2700
1/2	M6JL-H048	R-448A / R-449A		1140	1300	1490	1700	1930	2180	2430	2700	2960
	M6JL-H052	R-448A / R-449A		1350	1560	1790	2040	2300	2590	2880	3170	3460
	M6ZP-0053	R-448A / R-449A					1970	2280	2610	2960	3320	3720
	M6ZL-0055	R-448A / R-449A		1380	1590	1840	2110	2400	2710	3030	3360	3700
1/2+	M6ZP-H059	R-448A / R-449A					2050	2370	2720	3090	3510	3950
	M7ZP-H062	R-134a		1460	1820	2180	2550	2930	3310	3710	4110	4510
		R-513		1630	2020	2430	2840	3250	3680	4120	4560	5010
	M6GP-H064	R-448A / R-449A					2120	2460	2830	3240	3690	4180
	M7GP-H066	R-134a		1520	1890	2270	2650	3060	3470	3890	4330	4780
		R-513		1680	2090	2500	2930	3370	3820	4290	4760	5250
3/4	M6GP-H074	R-448A / R-449A					2680	3020	3440	3910	4440	5030
	M6KP-0075	R-448A / R-449A					2690	3040	3460	3940	4490	5090
	M6ZL-0078	R-448A / R-449A	1400	1620	1890	2200	2550	2930	3330	3770	4210	
	M6GL-H079	R-448A / R-449A	1520	1770	2070	2420	2820	3260	3740	4250	4800	
1	M6GP-H090	R-448A / R-449A						4020	4530	5090	5680	6310
	M6KP-0092	R-448A / R-449A					3550	4040	4570	5140	5740	6400
	M6KP-0095	R-448A / R-449A					3440	3990	4580	5180	5810	6460
	M6KP-0102	R-448A / R-449A					3790	4340	4950	5600	6330	7120
1 1/4	M6KP-0112	R-448A / R-449A					3890	4500	5160	5860	6610	7410
	M6KL-0123	R-448A / R-449A	2660	2900	3270	3720	4250	4840	5460	6110	6780	
	M6KP-0127	R-448A / R-449A					4470	5180	5940	6760	7620	8540
1 1/2	M6KP-0142	R-448A / R-449A					5040	5810	6620	7490	8410	9360

M-LINE AIR COOLED CONDENSING UNITS

Copevap M-Line Air Cooled Condensing Units Medium & High Temp

COPEVAP Medium - High Temp / Air Cooled			90° Ambient									
Nom. HP	Model	Refrigerant	BTU/Hr SST, 40°F RG (65°F RG in Bold and Blue Highlight)									
			-5	0	5	10	15	20	25	30	35	40	45
1/8	M7PH-0012	R-134a		**630**	**727**	**832**	**948**	**1070**	**1210**	**1360**	**1520**	**1700**	**1890**
		R-513		**701**	**799**	**905**	**1020**	**1150**	**1280**	**1430**	**1590**	**1760**	**1950**
	M7TH-0012	R-134a		**626**	**721**	**825**	**939**	**1060**	**1200**	**1350**	**1500**	**1680**	**1860**
		R-513		**695**	**791**	**896**	**1010**	**1130**	**1270**	**1410**	**1570**	**1730**	**1910**
1/6	M7PH-0015	R-134a		**781**	**895**	**1020**	**1150**	**1300**	**1460**	**1630**	**1820**	**2010**	**2230**
		R-513		**869**	**984**	**1110**	**1240**	**1390**	**1540**	**1710**	**1890**	**2080**	**2280**
	M7TH-0015	R-134a		**775**	**887**	**1010**	**1140**	**1290**	**1440**	**1610**	**1790**	**1980**	**2190**
		R-513		**861**	**974**	**1100**	**1230**	**1370**	**1520**	**1680**	**1860**	**2040**	**2240**
	M7EH-H016	R-134a		**790**	**906**	**1030**	**1170**	**1320**	**1480**	**1660**	**1850**	**2050**	**2270**
		R-513		**879**	**996**	**1120**	**1260**	**1410**	**1570**	**1750**	**1930**	**2130**	**2340**
1/5	M6EM-0020	R-407C		927	1060	1210	1360	1540	1730	1930			
		R-449A	815	952	1100	1250	1420	1590	1780	1970			
	M6PM-0020	R-407C		921	1050	1190	1340	1510	1690	1880			
		R-449A	815	952	1100	1250	1420	1590	1780	1970			
	M6TM-0020	R-407C		911	1040	1170	1320	1490	1660	1840			
		R-449A	806	939	1080	1230	1390	1560	1740	1930			
	M7EH-0020	R-134a		**1070**	**1230**	**1390**	**1570**	**1760**	**1970**	**2190**	**2430**	**2680**	**2960**
		R-513		**1190**	**1350**	**1510**	**1680**	**1870**	**2070**	**2290**	**2510**	**2760**	**3020**
	M7PH-0020	R-134a		**1070**	**1230**	**1390**	**1570**	**1760**	**1970**	**2190**	**2430**	**2680**	**2960**
		R-513		**1190**	**1350**	**1510**	**1680**	**1870**	**2070**	**2290**	**2510**	**2760**	**3020**
	M7TH-0020	R-134a		**1060**	**1210**	**1370**	**1550**	**1730**	**1940**	**2150**	**2390**	**2640**	**2900**
		R-513		**1180**	**1330**	**1490**	**1660**	**1840**	**2030**	**2240**	**2460**	**2700**	**2950**
	M7TP-0020	R-134a	987	1130	1280	1450	1630	1820	2030				
		R-513	983	1110	1250	1390	1550	1710	1890				
	M7EP-0021	R-134a	997	1140	1300	1470	1650	1850	2060				
		R-513	994	1120	1260	1410	1570	1740	1920				
	M7PP-0021	R-134a	997	1140	1300	1470	1650	1850	2060				
		R-513	994	1120	1260	1410	1570	1740	1920				
	M6TM-0022	R-449A	995	1150	1300	1470	1640	1830	2030	2240			
1/4	M6EM-0023	R-449A	1010	1160	1320	1490	1670	1870	2070	2300			
	M6PM-0023	R-449A	1010	1160	1320	1490	1670	1870	2070	2300			
	M7TH-0023	R-134a		**1280**	**1440**	**1610**	**1800**	**2020**	**2250**	**2490**	**2750**	**3020**	**3300**
		R-513		**1420**	**1570**	**1740**	**1930**	**2130**	**2350**	**2580**	**2820**	**3070**	**3330**
	M7EH-0024	R-134a		**1300**	**1450**	**1630**	**1830**	**2050**	**2290**	**2540**	**2810**	**3090**	**3390**
		R-513		**1440**	**1600**	**1770**	**1960**	**2170**	**2400**	**2640**	**2890**	**3160**	**3430**
	M7PH-0024	R-134a		**1300**	**1450**	**1630**	**1830**	**2050**	**2290**	**2540**	**2810**	**3090**	**3390**
		R-513		**1440**	**1600**	**1770**	**1960**	**2170**	**2400**	**2640**	**2890**	**3160**	**3430**
1/3	M6TM-0027	R-407C		911	1040	1170	1320	1490	1660	1840			
		R-449A	1220	1440	1650	1840	2040	2240	2450	2690			
	M7TH-0028	R-134a		**1430**	**1620**	**1830**	**2070**	**2320**	**2590**	**2870**	**3170**	**3490**	**3830**
		R-513		**1530**	**1740**	**1970**	**2220**	**2480**	**2750**	**3030**	**3310**	**3600**	**3900**
	M7EH-0029	R-134a		**1450**	**1640**	**1860**	**2100**	**2360**	**2640**	**2930**	**3240**	**3570**	**3920**
		R-513		**1560**	**1770**	**2010**	**2260**	**2530**	**2810**	**3100**	**3400**	**3710**	**4020**
	M7PH-0029	R-134a		**1450**	**1640**	**1860**	**2100**	**2360**	**2640**	**2930**	**3240**	**3570**	**3920**
		R-513		**1560**	**1770**	**2010**	**2260**	**2530**	**2810**	**3100**	**3400**	**3710**	**4020**
	M6PM-0030	R-449A	1440	1640	1850	2070	2320	2580	2860	3160			
	M6EM-H032	R-449A	1310	1490	1700	1930	2180	2450	2730	3020			
	M7EP-0032	R-134a	1530	1740	1980	2230	2500	2790	3100				
		R-513	1530	1720	1930	2160	2390	2640	2900				
	M7PP-0032	R-134a	1530	1740	1980	2230	2500	2790	3100				
		R-513	1530	1720	1930	2160	2390	2640	2900				
	M7TP-0032	R-134a	1500	1710	1940	2190	2450	2730	3030				
		R-513	1500	1690	1900	2110	2340	2580	2830				
	M7PP-0034	R-134a	1750	2000	2260	2550	2850	3180	3520				
		R-513	1750	1980	2210	2460	2730	3000	3290				

M-LINE AIR COOLED CONDENSING UNITS

Copevap M-Line Air Cooled Condensing Units Medium & High Temp

COPEVAP Medium - High Temp / Air Cooled			90° Ambient										
Nominal HP	Model	Refrigerant	BTU/Hr SST, 40°F RG (65°F RG in Bold and Blue Highlight)										
			-5	0	5	10	15	20	25	30	35	40	45
1/3+	M7EP-H036	R-134a	1800	2050	2330	2630	2950	3290	3650				
		R-513	1800	2030	2280	2540	2810	3110	3410				
	M7EH-0037	R-134a		**1930**	**2200**	**2490**	**2800**	**3120**	**3450**	**3800**	**4170**	**4540**	**4930**
		R-513		**2070**	**2370**	**2680**	**2990**	**3320**	**3650**	**3980**	**4310**	**4640**	**4960**
	M7PH-0038	R-134a		**1930**	**2200**	**2490**	**2800**	**3120**	**3450**	**3800**	**4170**	**4540**	**4930**
		R-513		**2070**	**2370**	**2680**	**2990**	**3320**	**3650**	**3980**	**4310**	**4640**	**4960**
	M6EM-H040	R-449A	1880	1950	2140	2420	2750	3120	3520	3910			
	M7PH-0042	R-134a		**2140**	**2450**	**2770**	**3110**	**3460**	**3830**	**4210**	**4590**	**4980**	**5380**
		R-513		**2300**	**2630**	**2970**	**3320**	**3670**	**4020**	**4370**	**4710**	**5030**	**5340**
	M7EH-H044	R-134a		**2310**	**2630**	**2960**	**3310**	**3670**	**4050**	**4450**	**4870**	**5300**	**5760**
		R-513		**2430**	**2770**	**3110**	**3470**	**3830**	**4210**	**4600**	**5010**	**5430**	**5870**
1/2	M6EM-H051	R-449A	2500	2610	2860	3210	3620	4060	4500	4910			
1/2+	M7BH-0060	R-134a	**2620**	**2970**	**3360**	**3790**	**4260**	**4760**	**5290**	**5860**	**6440**	**7060**	**7690**
		R-513	**2800**	**3160**	**3570**	**4020**	**4500**	**5010**	**5550**	**6120**	**6700**	**7300**	**7910**
	M6BP-0064	R-407C		2680	3060	3500	3990	4520	5090	5700			
		R-449A	2460	2840	3260	3710	4210	4750	5340	5970			
3/4	M6BP-0075	R-407C		3220	3700	4220	4770	5360	5990	6660			
		R-449A	3040	3460	3940	4490	5090	5740	6430	7170			
	M7BH-0075	R-134a	**3060**	**3480**	**4000**	**4600**	**5270**	**5980**	**6720**	**7470**	**8230**	**8980**	**9700**
		R-513	**3180**	**3550**	**4050**	**4660**	**5340**	**6080**	**6850**	**7650**	**8450**	**9240**	**9990**
1	M6BP-0092	R-407C			4830	5470	6140	6850	7600	8380			
		R-449A	4040	4570	5140	5740	6400	7100	7860	8670			
	M6BP-0106	R-407C			5560	6290	7030	7800	8590	9410			
		R-449A	4580	5200	5850	6520	7230	7960	8720	9500			

Extended Medium & Low Temp

COPEVAP Low Temp / Condensate Base			90° Ambient									
Nominal HP	Model	Refrigerant	BTU/Hr SST, 40°F RG (65°F RG in Bold and Blue Highlight)									
			-30	-25	-20	-15	-10	-5	0	5	10	15
1/5	M6TL-0018	R-449A		418	478	552	638	735	843	960	1090	1220
	M7TP-0020	R-134a		544	638	743	859	987	1130	1280	1450	1630
		R-513		565	656	756	865	983	1110	1250	1390	1550
	M7EP-0021	R-134a		548	643	749	867	997	1140	1300	1470	1650
		R-513		569	661	762	873	994	1120	1260	1410	1570
	M7PP-0021	R-134a		548	643	749	867	997	1140	1300	1470	1650
		R-513		569	661	762	873	994	1120	1260	1410	1570
	M6TL-0022	R-449A		605	692	796	917	1050	1200	1360	1520	1700
1/4	M6PL-0023	R-449A		609	698	804	926	1060	1210	1380	1550	1730
1/3	M6TL-0029	R-449A		703	804	925	1060	1220	1380	1560	1750	1950
	M6EL-0030	R-449A		710	812	935	1080	1230	1410	1590	1790	1990
	M6PL-0030	R-449A		710	812	935	1080	1230	1410	1590	1790	1990
	M7EP-0032	R-134a		834	982	1150	1330	1530	1740	1980	2230	2500
		R-513		868	1010	1170	1340	1530	1720	1930	2160	2390
	M7PP-0032	R-134a		834	982	1150	1330	1530	1740	1980	2230	2500
		R-513		868	1010	1170	1340	1530	1720	1930	2160	2390
	M7TP-0032	R-134a		824	969	1130	1310	1500	1710	1940	2190	2450
		R-513		857	999	1150	1320	1500	1690	1900	2110	2340
	M7PP-0034	R-134a		964	1130	1320	1530	1750	2000	2260	2550	2850
		R-513		1000	1170	1350	1550	1750	1980	2210	2460	2730
1/3+	M7EP-H036	R-134a		984	1160	1350	1560	1800	2050	2330	2630	2950
		R-513		1020	1190	1380	1580	1800	2030	2280	2540	2810
	M6TL-0040	R-449A		1020	1150	1310	1480	1670	1870	2080	2300	2530
	M6EL-0041	R-449A		1030	1170	1330	1500	1700	1900	2120	2360	2600
	M6PL-0041	R-449A		1030	1170	1330	1500	1700	1900	2120	2360	2600
1/2	M6TL-0051	R-449A		1330	1520	1750	1990	2240	2510	2790	3070	3350
	M6EL-0052	R-449A		1350	1540	1740	1970	2210	2460	2730	3000	3270
	M6PL-0052	R-449A		1350	1540	1740	1970	2210	2460	2730	3000	3270
1/2+	M6EL-0060	R-449A		1610	1860	2130	2420	2720	3030	3360	3690	4020
	M6PL-0060	R-449A		1560	1790	2050	2340	2640	2960	3290	3630	3980
	M6BP-0064	R-407C							2680	3060	3500	3990
		R-449A					2120	2460	2840	3260	3710	4210
3/4	M6BP-0075	R-407C							3220	3700	4220	4770
		R-449A					2690	3040	3460	3940	4490	5090
1	M6BP-0092	R-407C								4830	5470	6140
		R-449A					3550	4040	4570	5140	5740	6400
	M6BP-0106	R-407C								5560	6290	7030
		R-449A						4580	5200	5850	6520	7230
1 1/4	M6BL-0123	R-449A	2660	2900	3270	3720	4250	4840	5460	6110	6780	

M-LINE AIR COOLED CONDENSING UNITS

Copevap M-Line Air Cooled Condensing Units

COPEVAP												
					Refrigerant		Receiver Capacity* (Lbs @ 90% Volume)					
Unit Model	Compressor	Length	Width	Height	Liquid	Suction	R134a	R407C	R448/449	R513	MCA	Max Over-current Protection
M6BL-0123-CFA	RFT42C1E	24.00	16.29	13.64	3/8	1/2			3		21.4	30
M6BL-0123-CFV	RFT42C1E	24.00	16.29	13.64	3/8	1/2			3		11.2	15
M6BP-0064-CAA	RST45C1E	24.00	16.69	13.64	3/8	1/2		3.1	3		15.1	20
M6BP-0064-CAV	RST45C1E	24.00	16.69	13.64	3/8	1/2		3.1	3		7.5	15
M6BP-0075-CFA	RST55C1E	24.00	16.69	13.64	3/8	1/2		3.1	3		20.8	30
M6BP-0075-CAV	RST55C1E	24.00	16.69	13.64	3/8	1/2		3.1	3		9.7	15
M6BP-0092-CAV	RST64C1E	24.00	16.72	13.64	3/8	1/2		3.1	3		12.4	20
M6BP-0092-CFA	RST64C1E	24.00	16.29	13.64	3/8	1/2		3.1	3		20.3	30
M6BP-0106-CFV	RST80C1E	24.00	16.29	13.64	3/8	5/8		3.1	3		12.8	20
M6EL-0030-IAA	AFE11C4E	16.00	14.25	10.52	1/4	3/8			1.4		5.9	15
M6EL-0041-IAA	AFE14C5E	16.00	14.25	10.52	1/4	3/8			1.4		8.2	15
M6EL-0052-IAA	AFE20C5E	16.00	14.25	10.52	1/4	3/8			1.4		8.5	15
M6EL-0060-CAA	AFE23C5E	16.00	14.25	10.47	1/4	3/8			1.4		10	15
M6EM-0020-IAA	ASE12C4E	16.00	14.25	10.52	1/4	3/8			1.4		5.7	15
M6EM-0023-IAA	ASE14C4E	16.00	14.25	10.52	1/4	3/8			1.4		6.7	15
M6EM-H032-CAA	ASE20C4E	16.06	15.12	11.75	1/4	3/8			1.4		7.8	15
M6EM-H040-IAA	ASE28C5E	16.06	15.12	11.75	1/4	3/8			1.4		9.9	15
M6EM-H051-IAA	ASE39C5E	16.06	15.12	11.75	1/4	3/8			1.4		13.4	20
M6PL-0023-IAA	AFE08C4E	19.88	11.06	10.65	1/4	3/8			1.4		5.5	15
M6PL-0030-IAA	AFE11C4E	19.88	11.06	10.65	1/4	3/8			1.4		5.9	15
M6PL-0041-IAA	AFE14C5E	19.88	11.06	11.16	1/4	3/8			1.4		8.2	15
M6PL-0052-IAA	AFE20C5E	19.88	11.06	11.16	1/4	3/8			1.4		8.5	15
M6PL-0060-CAV	AFE23C5E	19.88	11.36	10.65	1/4	3/8			1.4		5.8	15
M6PM-0020-IAA	ASE12C4E	19.88	11.06	10.65	1/4	3/8		1.4	1.4		5.7	15
M6PM-0023-IAA	ASE14C4E	19.88	11.06	10.65	1/4	3/8			1.4		6.7	15
M6PM-0030-IAA	ASE24C5E	19.88	11.06	11.16	1/4	3/8			1.4		8.4	15
M6TL-0018-IAA	AFE06C4E	19.00	9.41	10.53	1/4	5/16			1.4		4.5	15
M6TL-0022-IAA	AFE08C4E	19.00	9.41	10.53	1/4	5/16			1.4		5.5	15
M6TL-0029-IAA	AFE11C4E	19.00	9.41	10.53	1/4	5/16			1.4		5.9	15
M6TL-0040-IAA	AFE14C5E	19.00	9.41	10.53	1/4	5/16			1.4		8.2	15
M6TL-0051-IAA	AFE20C5E	19.00	9.41	10.53	1/4	5/16			1.4		8.5	15
M6TM-0020-IAA	ASE12C4E	19.00	9.41	10.53	1/4	5/16			1.4		5.7	15
M6TM-0022-IAA	ASE14C4E	19.00	9.41	10.53	1/4	5/16			1.4		6.7	15
M6TM-0027-IAA	ASE20C4E	19.00	9.41	10.53	1/4	5/16			1.4		8.2	15
M7BH-0060-CFA	RRT64C1E	24.00	16.69	13.64	3/8	1/2	3.3			3.2	15.8	20
M7BH-0060-CAV	RRT64C1E	24.00	16.69	13.64	3/8	1/2	3.3			3.2	9.2	15
M7BH-0075-CFA	RRT81C1E	24.00	16.29	13.64	3/8	5/8	3.3			3.2	18.3	25
M7BH-0075-CFV	RRT81C1E	24.00	16.29	13.64	3/8	5/8	3.3			3.2	9.3	15
M7EH-0020-IAA	ARE25C4E	16.00	14.25	10.52	1/4	3/8	1.5			1.5	6.8	15
M7EH-0024-IAA	ARE29C4E	16.00	14.25	10.52	1/4	3/8	1.5			1.5	5.5	15
M7EH-0029-IAA	ARE35C5E	16.00	14.25	10.52	1/4	3/8	1.5			1.5	9.3	15
M7EH-0037-IAA	ARE48C5E	16.00	14.25	10.52	1/4	3/8	1.5			1.5	10.7	15
M7EH-H016-IAA	ARE17C4E	16.06	15.12	11.75	1/4	3/8	1.5			1.5	6.4	15
M7EH-H044-IAA	RRT62C1E	16.62	15.27	11.75	1/4	1/2	1.5			1.5	12.8	20
M7EH-H053-IFA	RRT64C1E	16.26	15.62	11.75	1/4	1/2	1.5			1.5	14.6	20
M7EP-0021-IAA	AFF07C1E	16.00	14.25	10.52	1/4	3/8	1.5			1.5	5.9	15
M7EP-0032-IAA	AFF10C1E	16.00	14.25	10.52	1/4	3/8	1.5			1.5	4.9	15
M7EP-H036-IAA	AFF13C1E	16.43	15.12	11.75	1/4	3/8	1.5			1.5	11.5	15
M7PH-0012-IAA	ARE13C4E	19.88	11.06	10.65	1/4	3/8	1.5			1.5	5.9	15
M7PH-0015-IAA	ARE17C4E	19.88	11.06	10.65	1/4	3/8	1.5			1.5	5.9	15
M7PH-0020-IAA	ARE25C4E	19.88	11.06	10.65	1/4	3/8	1.5			1.5	6.8	15
M7PH-0024-IAA	ARE29C4E	19.88	11.06	10.65	1/4	3/8	1.5			1.5	5.5	15
M7PH-0029-IAA	ARE35C5E	19.88	11.06	11.16	1/4	3/8	1.5			1.5	9.3	15
M7PH-0038-IAA	ARE48C5E	19.88	11.06	11.16	1/4	3/8	1.5			1.5	10.7	15
M7PH-0042-IAA	ARE54C5E	19.88	11.06	11.16	1/4	3/8	1.5			1.5	12.3	20
M7PP-0021-IAA	AFF07C1E	19.90	11.06	11.69	1/4	3/8	1.5			1.5	5.9	15
M7PP-0032-IAA	AFF10C1E	19.90	11.06	11.69	1/4	3/8	1.5			1.5	4.9	15
M7PP-0034-IAA	AFF13C1E	19.90	11.06	11.69	1/4	3/8	1.5			1.5	11.3	15
M7TH-0012-IAA	ARE13C4E	19.00	9.41	10.53	1/4	5/16	1.5			1.5	5.9	15
M7TH-0015-IAA	ARE17C4E	19.00	9.41	10.53	1/4	5/16	1.5			1.5	5.9	15
M7TH-0020-IAA	ARE25C4E	19.00	9.41	10.53	1/4	5/16	1.5			1.5	6.8	15
M7TH-0023-IAA	ARE29C4E	19.00	9.41	10.53	1/4	5/16	1.5			1.5	5.5	15
M7TH-0028-IAA	ARE35C5E	19.00	9.41	10.53	1/4	5/16	1.5			1.5	9.3	15
M7TP-0020-IAA	AFF07C1E	19.34	9.41	10.53	1/4	5/16	1.5			1.5	5.9	15
M7TP-0032-IAA	AFF10C1E	19.34	9.41	10.53	1/4	5/16	1.5			1.5	4.9	15

^Connections listed for -177 (B and P Chassis), -103 (E Chassis), and -118 (T Chassis) BOMs. See OPI for connections for other specific BOMs

*Reciever capacity applies only to units with receivers. See BOM Matrix for included components.

M-LINE WATER COOLED CONDENSING UNITS

Copeland M-Line Water Cooled Condensing Units
Medium Temp & High Temp

Medium Temp - High Temp / Water Cooled																	
Nom HP	Model	Refrigerant	BTU/H at 105° condensing, 75° water inlet - evaporator temp (°F), 40°F RG (65°F RG in Bold and Blue Highlight)												Water flow (GPM) @evap		
			-10	-5	0	5	10	15	20	25	30	35	40	45	0	25	45
1/5	M6WH-0021	R-449A		795	940	1100	1270	1450	1650	1860					0.1	0.3	
1/4	M6WH-0023	R-449A		1000	1170	1350	1540	1750	1980	2230					0.2	0.3	
	M7WH-0026	R-134a			**1270**	**1430**	**1620**	**1840**	**2090**	**2360**	**2660**	**2990**	**3340**	**3710**	0.2	0.3	0.5
		R-513			**1420**	**1590**	**1780**	**2000**	**2240**	**2510**	**2810**	**3140**	**3480**	**3860**	0.2	0.3	0.5
	M7WH-0033	R-134a			**1430**	**1640**	**1880**	**2150**	**2440**	**2760**	**3110**	**3490**	**3900**	**4340**	0.2	0.4	0.6
		R-513			**1550**	**1780**	**2040**	**2330**	**2650**	**2990**	**3350**	**3740**	**4160**	**4600**	0.2	0.4	0.6
	M6WH-0025	R-407C			**1420**	**1480**	**1700**	**1950**	**2210**	**2510**	**2830**				0.2	0.4	
		R-449A	**983**	**1240**	**1480**	**1730**	**1980**	**2240**	**2520**	**2830**	**3180**				0.2	0.4	
1/3	M6WH-0036	R-449A	1280	1480	1710	1960	2240	2550	2880	3250	3650				0.2	0.4	
	M7WH-0040	R-134a			1700	1950	2240	2550	2890	3270	3670	4100	4560	5040	0.2	0.5	0.7
		R-513			1910	2170	2450	2760	3110	3480	3880	4300	4760	5240	0.3	0.5	0.7
1/2	M7WH-0049	R-134a			2030	2330	2670	3040	3460	3920	4410	4940	5510	6120	0.3	0.6	0.9
		R-513			2390	2710	3070	3460	3900	4370	4890	5450	6040	6680	0.4	0.6	0.9
	M6WH-0043	R-449A		1920	2030	2270	2610	3020	3490	3990					0.3	0.5	
	M7WH-0050	R-134a		1990	2350	2730	3150	3590	4080	4610	5180	5800	6480	7210	0.3	0.6	1
		R-513		2100	2510	2940	3390	3870	4380	4930	5530	6180	6880	7640	0.4	0.7	1
	M6WH-0050	R-449A	**2270**	**2280**	**2460**	**2760**	**3170**	**3640**	**4160**	**4690**	**5200**				0.3	0.6	
1/2+	M7WH-0056	R-134a		2500	2870	3300	3770	4300	4880	5510	6190	6930	7730	8580	0.4	0.8	1.1
		R-513		**2630**	**3070**	**3540**	**4060**	**4620**	**5230**	**5890**	**6610**	**7380**	**8200**	**9090**	0.4	0.8	1.2
3/4	M7WM-0075	R-134a		**3770**	**4410**	**5110**	**5870**	**6700**	**7580**	**8530**	**9520**	**10600**	**11700**	**12800**	0.6	1.1	1.6
		R-513		**3920**	**4540**	**5230**	**5980**	**6800**	**7690**	**8660**	**9710**	**10800**	**12100**	**13400**	0.7	1.2	1.7

Extended Medium & Low Temp

Low - Extended Medium Temp / Water Cooled															
Rated HP	Model	Refrigerant	BTU/H at 105° condensing, 75° water inlet - evaporator temp (°F), 40°F RG (65°F RG in Bold and Blue Highlight)												
			-30	-25	-20	-15	-10	-5	0	5	10	15	20	25	30
1/4	M6WL-0025	R-449A		588	679	789	917	1060	1220	1400	1600	1810			
1/3	M6WL-0033	R-449A		691	797	926	1080	1250	1440	1650	1880	2120			
1/3+	M6WL-0040	R-449A		1020	1180	1350	1550	1770	2010	2280	2570	2900			
1/2	M6WL-0051	R-449A		1260	1460	1700	1980	2290	2630	2980	3360	3750			
1/2+	M6WF-0056	R-407C							2420	2510	2930	3400	3920	4510	5140
		R-449A					2150	2500	2890	3330	3830	4390	5030	5740	6540
	M6WL-0067	R-449A	1470	1720	2040	2410	2840	3330	3870	4470	5130				
3/4	M6WF-0075	R-407C							3160	3310	3850	4430	5080	5790	6580
		R-449A					2640	3070	3560	4100	4710	5410	6190	7060	8050
	M6WL-0075	R-407C							4000	4200	4880	5620	6440	7350	8350
		R-449A					3720	4300	4930	5630	6420	7300	8280	9390	10600
1	M6WF-0106	R-407C							4310	4520	5230	6010	6860	7800	8840
		R-449A					3520	4070	4720	5470	6310	7250	8270	9400	10600
	M6WL-0105	R-407C							5080	5340	6190	7100	8080	9150	10300
		R-449A					4420	5180	6000	6900	7860	8890	9990	11100	12400
1 1/4	M6WF-0125	R-407C							4360	4580	5320	6100	6940	7860	8870
		R-449A					3800	4450	5150	5900	6720	7600	8540	9550	10600
	M6WF-0126	R-407C							5080	5340	6190	7100	8080	9150	10300
		R-449A					4420	5180	6000	6900	7860	8890	9990	11100	12400

*115v data shown. 230v data may vary slightly within 1%.

M-LINE WATER COOLED CONDENSING UNITS

Copeland M-Line Water Cooled Condensing Units

Water Cooled												
					Refrigerant Connections		Receiver Capacity (Lbs @ 90% Volume)					
Unit Model	Compressor	Length	Width	Height	Liquid	Suction	R-134a	R-407C	R-448/449	R-513	MCA	Max Over-current Protection
M6WF-0056-IAA	RST45C1E	18.30	12.87	9.99	3/8	1/2			1.4		13.1	20
M6WF-0056-IAV	RST45C1E	18.30	12.87	9.99	3/8	1/2			1.4		6.6	15
M6WF-0075-CFA	RST55C1E	24.23	16.10	11.85	3/8	1/2			1.4		18.8	30
M6WF-0075-CAV	RST55C1E	24.23	16.10	11.85	3/8	1/2			1.4		8.5	15
M6WF-0106-CAV	RST64C1E	24.23	16.10	11.85	3/8	1/2			5.1		11.3	20
M6WF-0125-CFV	RST70C1E	24.24	16.10	13.20	3/8	5/8			5.1		9.6	15
M6WF-0125-TAC	RST70C1E	24.24	16.10	13.20	3/8	5/8			5.1		6.9	15
M6WF-0126-CFV	RST80C1E	24.24	16.10	13.20	3/8	5/8			5.1		11.6	20
M6WF-0126-TAC	RST80C1E	24.24	16.10	13.20	3/8	5/8			5.1		7.1	15
M6WH-0021-IAA	ASE12C4E	18.18	12.88	9.35	1/4	3/8			1.4		5	15
M6WH-0023-IAA	ASE14C4E	18.18	12.88	9.35	1/4	3/8			1.4		6	15
M6WH-0025-IAA	ASE20C4E	18.18	12.88	9.35	1/4	3/8			1.4		7.5	15
M6WH-0036-IAA	ASE24C5E	18.18	12.88	9.80	1/4	3/8			1.4		7.8	15
M6WH-0036-IAI	ASE24C5E	18.18	12.88	9.80	1/4	3/8			1.4		4.1	15
M6WH-0043-IAA	ASE28C5E	18.18	12.88	10.22	1/4	3/8			1.4		9	15
M6WH-0043-IAV	ASE28C5E	18.18	12.88	10.22	1/4	3/8			1.4		5	15
M6WH-0050-CAA	ASE32C5E	18.18	12.97	9.92	1/4	3/8			1.4		9.4	15
M6WH-0050-CAV	ASE32C5E	18.18	12.88	10.65	1/4	3/8			1.4		5.6	15
M6WL-0025-IAA	AFE08C4E	24.00	16.41	9.73	1/4	3/8			1.4		5.5	15
M6WL-0033-IAA	AFE11C4E	24.00	16.41	9.73	1/4	3/8			1.4		5.9	15
M6WL-0040-IAA	AFE14C5E	24.00	16.41	10.23	1/4	3/8			1.4		8.2	15
M6WL-0051-IAA	AFE17C4E	24.00	16.41	10.18	1/4	3/8			1.4		10.4	15
M6WL-0067-CFA	RFT26C1E	24.00	16.41	11.87	3/8	1/2			1.4		14	20
M6WL-0075-CFA	RST64C1E	24.00	16.41	11.87	3/8	1/2			1.4		18.9	30
M6WL-0075-IAV	RST64C1E	24.00	16.41	10.46	3/8	1/2			1.4		11.8	20
M6WL-0105-CFV	RST80C1E	24.00	16.43	12.47	3/8	5/8			5.1		12.2	20
M6WL-0105-TAC	RST80C1E	24.00	16.43	12.47	3/8	5/8			5.1		7.7	15
M7WH-0026-IAA	ARE29C4E	18.18	12.88	9.35	1/4	3/8	1.5			1.5	4.9	15
M7WH-0033-IAA	ARE35C5E	18.18	12.88	9.80	1/4	3/8	1.5			1.5	8.6	15
M7WH-0033-IAI	ARE35C5E	18.18	12.88	9.80	1/4	3/8	1.5			1.5	3.8	15
M7WH-0040-IAA	ARE40C4E	18.18	12.88	9.80	1/4	3/8	1.5			1.5	8.8	15
M7WH-0049-IAV	ARE51C4E	18.18	12.88	9.80	1/4	3/8	1.5			1.5	6.1	15
M7WH-0050-IAA	RRT62C1E	18.31	12.87	9.59	3/8	1/2	1.5			1.5	11.9	20
M7WH-0050-IAV	RRT62C1E	18.31	12.87	9.59	3/8	1/2	1.5			1.5	5.4	15
M7WH-0056-IFA	RRT64C1E	18.30	12.87	9.99	3/8	1/2	1.5			1.5	13.8	20
M7WH-0056-IAV	RRT64C1E	18.30	12.87	9.99	3/8	1/2	1.5			1.5	8	15
M7WM-0075-CFA	RRT10K1E	24.24	16.10	13.20	3/8	5/8	1.5			1.5	17	30
M7WM-0075-CFV	RRT10K1E	24.24	16.10	13.20	3/8	5/8	1.5			1.5	10	15

Copeland M-Line R-290/Condensate Base Condensing Units

R-290 / Condensate Base		90° Ambient												
Nominal HP	Model	BTU/Hr SST, 40°F RG												
		-30	-25	-20	-15	-10	-5	0	5	10	15	20	25	30
1/5	MUPP-0018		539	627	722	824	934	1050	1180	1310	1460	1610	1780	1950
	MUPM-0022					922	1040	1160	1310	1460	1630	1800	1990	2190
	MUPP-0022		745	854	965	1080	1200	1340	1480	1640	1810	2000	2200	2430
1/4	MUPP-0023		678	763	856	960	1070	1200	1340	1490	1650	1830	2010	
	MUPM-0024					1100	1220	1360	1510	1680	1860	2050	2250	2460
	MUPP-0025		827	945	1080	1220	1370	1540	1720	1910	2110	2320	2550	2780
	MUPP-0028		995	1130	1280	1440	1620	1800	2000	2210	2440	2670	2920	3180
1/3	MUPM-0031					1290	1450	1630	1830	2040	2270	2510	2760	3030
	MUPP-0032		961	1080	1220	1370	1540	1720	1910	2120	2340	2580	2830	
	MUPP-0037		1170	1320	1480	1660	1850	2050	2260	2490	2720	2970	3240	
	MUPM-0039					1970	2170	2390	2640	2910	3200	3500	3800	4110
1/2	MUPL-0045	1080	1240	1420	1600	1800	2020	2240	2480	2730				
	MUPM-0048					2170	2410	2660	2940	3230	3540	3860	4190	4530
	MUPL-0057	1390	1590	1810	2040	2290	2550	2820	3110	3420				
	MUPL-0058	1380	1580	1810	2050	2320	2600	2890	3200	3520				
3/4	MUPL-0070	1700	1950	2220	2500	2800	3120	3450	3790	4140				

M-LINE R-290 CONDENSING UNITS

Copeland M-Line R-290 Air Cooled Condensing Units

R-290 / Air Cooled		90° Ambient												
Nominal HP	Model	BTU/Hr SST, 40°F RG												
		-30	-25	-20	-15	-10	-5	0	5	10	15	20	25	30
1/5	MUJM-0019					861	969	1090	1220	1360	1500	1660	1820	1980
	MUJM-0022					1040	1150	1270	1400	1550	1710	1870	2040	2210
	MUJM-H022					922	1040	1160	1310	1460	1630	1800	1990	2190
1/4	MUZM-0023					943	1060	1190	1340	1500	1670	1860	2050	2260
	MUGM-H024					972	1090	1230	1380	1550	1730	1920	2130	2360
	MUJM-H024					1100	1220	1360	1510	1680	1860	2050	2250	2460
	MUZM-H024					955	1070	1210	1350	1520	1690	1880	2080	2300
	MUZM-0026					1120	1240	1390	1550	1720	1910	2110	2330	2550
	MUZM-H027					1130	1260	1400	1570	1740	1940	2140	2360	2590
	MUGM-H028					1150	1280	1430	1600	1780	1980	2200	2420	2670
	MUJM-0028					1330	1500	1680	1870	2050	2250	2440	2650	2860
	MUJP-0029		912	1020	1150	1280	1430	1590	1750	1930	2120	2310	2520	
1/3	MUJM-H032					1430	1630	1830	2050	2270	2510	2750	3010	3280
	MUJP-H032		961	1080	1220	1370	1540	1720	1910	2120	2340	2580	2830	
	MUZP-0034		978	1110	1250	1410	1580	1770	1970	2190	2430	2680	2950	
	MUZP-H034		987	1120	1260	1420	1600	1790	2000	2230	2470	2730	3000	
	MUGP-H035		999	1130	1280	1450	1630	1830	2050	2290	2540	2820	3110	
	MUJL-0036	978	1110	1250	1400	1550	1720	1900	2080	2270				
	MUZM-0036					1460	1670	1890	2110	2350	2600	2860	3140	3430
	MUZM-H036					1480	1690	1910	2140	2390	2640	2910	3200	3500
	MUGM-H038					1510	1720	1950	2200	2450	2720	3010	3310	3630
	MUJM-H039					1970	2170	2390	2640	2910	3200	3500	3800	4110
1/3+	MUJL-H040	1040	1180	1340	1510	1690	1880	2090	2310	2540				
	MUZL-0044	1060	1210	1370	1540	1730	1940	2160	2390	2650				
	MUZL-H044	1070	1220	1380	1560	1760	1970	2190	2430	2690				
	MUGL-H045	1090	1240	1410	1590	1790	2010	2250	2500	2780				
	MUZM-0046					2060	2260	2500	2760	3050	3360	3690	4040	4390
1/2	MUZM-H047					2100	2310	2540	2810	3110	3430	3770	4130	4500
	MUGM-H049					2190	2390	2640	2920	3230	3570	3940	4340	4750
	MUZP-0050					2010	2270	2560	2870	3210	3570	3960	4380	4810
	MUZP-H051					2060	2330	2630	2940	3290	3660	4070	4500	4950
	MUGP-H054					2180	2460	2760	3090	3460	3860	4300	4780	5300
	MUZP-0059					2310	2690	3080	3470	3870	4280	4710	5160	5640
1/2+	MUZP-H061					2340	2740	3140	3550	3960	4390	4840	5320	5820
	MUGP-H065					2410	2840	3280	3730	4190	4670	5180	5720	6300
	MUZL-0066	1500	1730	1980	2250	2530	2840	3170	3520	3880				
	MUZP-0066					3020	3250	3550	3920	4340	4790	5270	5750	6220
	MUZL-H067	1520	1760	2010	2290	2580	2900	3240	3600	3980				
	MUZP-H068					3110	3340	3650	4020	4450	4920	5420	5930	6430
3/4	MUGL-H070	1560	1810	2080	2370	2690	3030	3400	3800	4220				
	MUZP-0072					3170	3520	3920	4350	4800	5280	5770	6260	6750
	MUGP-H073					3290	3530	3850	4250	4730	5260	5840	6440	7070
	MUZP-H074					3240	3610	4030	4470	4950	5440	5950	6460	6970
	MUZL-0077	1910	2170	2440	2740	3060	3410	3770	4160	4570				
	MUZL-0077	1910	2170	2440	2740	3060	3410	3770	4160	4570				
	MUZL-H078	1950	2200	2490	2800	3130	3490	3870	4270	4690				
	MUZL-H078	1950	2200	2490	2800	3130	3490	3870	4270	4690				
3/4+	MUGP-H081					3400	3810	4270	4770	5310	5870	6450	7030	7620
	MUZL-0081	2030	2290	2580	2900	3230	3580	3960	4350	4750				
	MUGL-H082	2000	2280	2580	2910	3270	3660	4070	4520	5000				
	MUGL-H082	2000	2280	2580	2910	3270	3660	4070	4520	5000				
	MUZL-H082	2060	2330	2630	2950	3300	3670	4060	4470	4890				
	MUGL-H086	2120	2410	2730	3070	3450	3850	4290	4750	5250				
1	MUZL-0098	2480	2790	3140	3510	3900	4310	4730	5150	5590				
	MUZL-0098	2480	2790	3140	3510	3900	4310	4730	5150	5590				
	MUZL-H100	2530	2850	3210	3600	4000	4430	4870	5310	5770				
	MUZL-H100	2530	2850	3210	3600	4000	4430	4870	5310	5770				
	MUGL-H106	2620	2980	3370	3800	4250	4730	5230	5750	6290				
	MUGL-H106	2620	2980	3370	3800	4250	4730	5230	5750	6290				

M-LINE R-290 CONDENSING UNITS

Copeland M-Line R-290 Condensing Units

Copevap										
						Connections				
Unit Model	Compressor	Voltage	Length	Width	Height	Liquid	Suction	MCA	Max Over-current Protection	Ship Weight
MUGL-H045-IAA-173	AFE13C4U	115-1	17.68	14.34	11.79	1/4	5/16	9.2	15	
MUGL-H070-IAV-173	RFT22C1U	208-230-1	18.5	14.34	11.79	1/4	3/8	7	15	
MUGL-H082-CAA-173	RFT26C1U	115-1	18.11	14.89	11.79	1/4	3/8	12.7	15	
MUGL-H082-IAV-173	RFT26C1U	208-230-1	18.5	14.34	11.79	1/4	3/8	8.1	15	
MUGL-H086-CAA-173	RFT30C1U	115-1	18.1	14.89	11.79	1/4	3/8	13.7	20	
MUGL-H106-CFA-173	RFT37C1U	115-1	18.1	14.34	11.79	1/4	3/8	17.3	25	
MUGL-H106-CFV-173	RFT37C1U	208-230-1	18.1	14.34	11.79	1/4	3/8	11.3	15	
MUGM-H024-IAA-173	ASE12C4U	115-1	17.65	14.34	11.79	1/4	5/16	7.3	15	
MUGM-H028-IAA-173	ASE17C4U	115-1	17.65	14.34	11.79	1/4	5/16	8	15	
MUGM-H038-IAA-173	ASE24C4U	115-1	17.68	14.34	11.79	1/4	5/16	9.2	15	
MUGM-H049-IAA-173	ASE32C4U	115-1	17.68	14.34	11.79	1/4	5/16	14.2	20	
MUGP-H035-IAA-173	AFF10C1U	115-1	18.25	14.34	11.79	1/4	5/16	12.3	15	
MUGP-H054-CAA-173	RST37C1U	115-1	18.11	14.89	11.79	1/4	3/8	13.3	20	64
MUGP-H065-CAA-173	RST44C1U	115-1	18.1	14.89	11.79	1/4	3/8	13	20	
MUGP-H073-CAA-173	RST53C1U	115-1	18.1	14.89	11.79	1/4	3/8	13.8	20	
MUGP-H081-CAV-173	RST58C1U	208-230-1	18.11	14.89	11.79	1/4	3/8	8.5	15	
MUJL-0036-IAA-173	AFE13C4U	115-1	13.99	11.67	9.64	1/4	5/16	8.2	15	
MUJL-H040-IAA-173	AFE13C4U	115-1	14.04	11.67	9.62	1/4	5/16	8.2	15	
MUJM-0019-IAA-173	ASE12C4U	115-1	13.96	11.66	9.64	1/4	5/16	6.3	15	32
MUJM-0022-IAA-173	ASE17C4U	115-1	13.96	11.66	9.64	1/4	5/16	6.9	15	
MUJM-0028-IAA-173	ASE24C4U	115-1	13.99	11.67	9.64	1/4	5/16	8.2	15	33
MUJM-H022-IAA-173	ASE12C4U	115-1	14	11.67	9.63	1/4	5/16	6.3	15	
MUJM-H024-IAA-173	ASE17C4U	115-1	14	11.67	9.63	1/4	5/16	6.9	15	
MUJM-H032-IAA-173	ASE24C4U	115-1	14.04	11.67	9.62	1/4	5/16	8.2	15	
MUJM-H039-IAA-173	ASE32C4U	115-1	14.04	11.67	9.62	1/4	5/16	13.2	20	
MUJP-0029-IAA-173	AFF10C1U	115-1	14.09	12.45	9.63	1/4	5/16	11.3	15	
MUJP-H032-IAA-173	AFF10C1U	115-1	14.19	12.36	9.63	1/4	5/16	11.3	15	
MUPL-0045-IAA-173	AFE15C5U	115-1	19.88	11.66	10.46	1/4	5/16	8.2	15	
MUPL-0057-IAA-173	AFE20C5U	115-1	19.88	11.66	10.46	1/4	5/16	9.2	15	
MUPL-0058-CAA-173	AFE20C5U	115-1	11.84	19.88	10.46	1/4	5/16	9.2	15	
MUPL-0070-CAA-173	AFE25C5U	115-1	11.84	19.88	10.46	1/4	5/16	9.5	15	
MUPM-0022-IAA-173	ASE12C4U	115-1	19.88	11.66	10.46	1/4	5/16	6.3	15	
MUPM-0024-IAA-173	ASE17C4U	115-1	19.88	11.66	10.46	1/4	5/16	6.9	15	
MUPM-0031-IAA-173	ASE21C5U	115-1	19.88	11.66	10.46	1/4	5/16	6.9	15	
MUPM-0039-IAA-173	ASE32C4U	115-1	19.88	11.66	10.46	1/4	5/16	13.2	20	
MUPM-0047-IAA-173	ASE37C5U	115-1	19.88	11.66	10.46	1/4	5/16	9.7	15	
MUPM-0048-CAA-173	ASE37C5U	115-1	11.84	19.88	10.46	1/4	5/16	9.7	15	40
MUPP-0018-RAA-173	ASM12C1U	115-1	19.88	11.66	10.47	1/4	5/16	4	15	
MUPP-0022-RAA-173	ASM16C1U	115-1	19.88	11.66	10.47	1/4	5/16	4.2	15	
MUPP-0023-IAA-173	AFM06C1U	115-1	19.88	11.66	10.46	1/4	5/16	5.7	15	
MUPP-0025-RAA-173	ASM19C1U	115-1	19.88	11.66	10.47	1/4	5/16	5.9	15	
MUPP-0028-RAA-173	ASM22C1U	115-1	19.88	11.66	10.47	1/4	5/16	6.8	15	
MUPP-0032-IAA-173	AFF10C1U	115-1	20.04	11.66	10.47	1/4	5/16	11.3	15	
MUPP-0037-IAA-173	AFF12C1U	115-1	20.04	11.66	10.47	1/4	5/16	11.3	15	
MUZL-0044-IAA-173	AFE13C4U	115-1	16.18	13.58	11.7	1/4	5/16	8.4	15	
MUZL-0066-IAV-173	RFT22C1U	208-230-1	16.99	13.42	11.7	1/4	3/8	6.6	15	
MUZL-0077-CAA-173	RFT26C1U	115-1	16.61	14.13	11.7	1/4	3/8	11.9	15	
MUZL-0077-IAV-173	RFT26C1U	208-230-1	16.99	13.42	11.7	1/4	3/8	7.7	15	58
MUZL-0081-CAA-173	RFT30C1U	115-1	16.6	14.13	11.7	1/4	3/8	12.9	20	
MUZL-0098-CFA-173	RFT37C1U	115-1	16.6	14.09	11.7	1/4	3/8	16.5	25	
MUZL-0098-CFV-173	RFT37C1U	208-230-1	16.6	14.09	11.7	1/4	3/8	10.9	15	
MUZL-H044-IAA-173	AFE13C4U	115-1	16.18	13.05	11.7	1/4	5/16	8.4	15	
MUZL-H067-IAV-173	RFT22C1U	208-230-1	16.92	13.84	11.7	1/4	3/8	6.6	15	
MUZL-H078-CAA-173	RFT26C1U	115-1	16.61	14.1	11.7	1/4	3/8	11.9	15	
MUZL-H078-IAV-173	RFT26C1U	208-230-1	16.92	13.84	11.7	1/4	3/8	7.7	15	
MUZL-H082-CAA-173	RFT30C1U	115-1	16.6	14.17	11.7	1/4	3/8	12.9	20	
MUZL-H100-CFA-173	RFT37C1U	115-1	16.6	14.15	11.7	1/4	3/8	16.5	25	
MUZL-H100-CFV-173	RFT37C1U	208-230-1	16.6	14.15	11.7	1/4	3/8	10.9	15	
MUZM-0023-IAA-173	ASE12C4U	115-1	16.15	13.58	11.7	1/4	5/16	6.5	15	
MUZM-0026-IAA-173	ASE17C4U	115-1	16.15	13.58	11.7	1/4	5/16	7.1	15	
MUZM-0036-IAA-173	ASE24C4U	115-1	16.18	13.58	11.7	1/4	5/16	8.4	15	
MUZM-0046-IAA-173	ASE32C4U	115-1	16.18	13.58	11.7	1/4	5/16	13.4	20	40
MUZM-H024-IAA-173	ASE12C4U	115-1	16.15	13.05	11.7	1/4	5/16	6.5	15	
MUZM-H027-IAA-173	ASE17C4U	115-1	16.15	13.05	11.7	1/4	5/16	7.1	15	
MUZM-H036-IAA-173	ASE24C4U	115-1	16.18	13.05	11.7	1/4	5/16	8.4	15	
MUZM-H047-IAA-173	ASE32C4U	115-1	16.18	13.05	11.7	1/4	5/16	13.4	20	
MUZP-0034-IAA-173	AFF10C1U	115-1	16.69	13.81	11.7	1/4	5/16	11.5	15	
MUZP-0050-CAA-173	RST37C1U	115-1	16.61	14.13	11.7	1/4	3/8	12.5	20	
MUZP-0059-CAA-173	RST44C1U	115-1	16.6	14.13	11.7	1/4	3/8	12.1	20	
MUZP-0066-CAA-173	RST53C1U	115-1	16.6	14.13	11.7	1/4	3/8	13	20	
MUZP-0072-CAV-173	RST58C1U	208-230-1	16.61	14.13	11.7	1/4	3/8	8.1	15	
MUZP-H034-IAA-173	AFF10C1U	115-1	16.69	13.73	11.7	1/4	5/16	11.5	15	
MUZP-H051-CAA-173	RST37C1U	115-1	16.61	14.1	11.7	1/4	3/8	12.5	20	
MUZP-H061-CAA-173	RST44C1U	115-1	16.6	14.17	11.7	1/4	3/8	12.1	20	
MUZP-H068-CAA-173	RST53C1U	115-1	16.6	14.17	11.7	1/4	3/8	13	20	
MUZP-H074-CAV-173	RST58C1U	208-230-1	16.61	14.1	11.7	1/4	3/8	8.1	15	

M-LINE COMPETITVE CROSS

M-Line Competitive Cross

Nom HP	Tecumseh		Danfoss		Embraco		Old Copeland			New Copeland		
	Model Number	Btu/h	Model Number	Btu/h	Model Numbe	Btu/h	Model Number	Compressor	Btu/h	Model Number	Compressor	Btu/h
LT R-404A -10°F Evap/90°F Ambient												
1/4	AE2410Z-AA1AGB	890					M4TL-H025-IAA-*18	AFE08C4E-IAA	860	M6TL-0022-IAA-118	AFE08C4E-IAA	927
	AE2410Z-AA1ASC	910					M4FL-H025-IAA-*	AFE08C4E-IAA	876	M6JL-H023-IAA-177	AFE08C4E-IAA	936
							M4FL-0025-IAA-072	AFB09C3E	872	M6JL-0021-IAA-078	AFE08C4E-IAA	872
1/3	AE2415Z-AA1ASC	1380	UCHC0025RWB000B	1350			M4FL-0033-IAA-103	AFE11C3E-IAA	1390	M6ZM-0032-IAA-177	ASE24C5E-IAA	1340
	AE2415Z-AA1ASS	1380	UCHC0025R*B	1350			M4FL-0033-IAA-111	AFE11C3E-IAA	1390	M6ZM-0032-IAA-179	ASE24C5E-IAA	1340
1/2							M4FL-0040-IAA-103	AFE13C3E	2040	M6JL-H048-IAA-177	AFE17C4E-IAA	1940
							M4FL-0040-IAV-103	AFE13C3E	2040	M6JL-H048-IAV-177	AFE17C4E-IAV	1940
	AJA2423ZAADG	2254	LCHC0050RWB000B	2500	UT2155GK-	2330	M4FL-H051-IAA-103	AFE17C4E-IAA	2150	M6JL-H052-IAA-177	AFE20C5E-IAA	2240
	AJA2423ZAADC	2254										
3/4	AKA2430ZAADS	3003	LCHC0060UWC000B	3050			M4FL-0067-CFA-111	AFT26C1E-CFA	3290	M6ZL-H078-CFA-179	RFT26C1E-CFA	
	AKA2430ZAADC	3003	LCHC0060UWC000B	3050			M4FL-0067-CFA-103	AFT26C1E-CFA	3290	M6ZL-H078-CFA-177	RFT26C1E-CFA	
							M4FL-0067-CFV-103	AFT26C1E-CFV	3290	M6GP-H074-CAV-177	RST55C1E-CAV	3070
1	AJB2439ZAADG	3898	LCHC0075UWC000B	3900			M4FF-0080-CFA-212	RST64C1E-CFA	3880	M6KP-0092-CFA-177	RST64C1E-CFA	4050
	AWA2448ZXDXC	4838	LCHC0100UWD000N	5350						M6KL-0123-CFV-072	RFT42C1E-PFV	4900
1 1/2	AWA2464ZXDXC	6450								FFAP-A17Z-CFV-072	ZS11KAE-PFV	6680
2	AWA2479ZXDXC	7871								FFAP-A20Z-CFV-072	ZS13KAE-PFV	7650
	AVA2510ZXNXC	9999								FFAP-A30Z-CFV-072	ZS19KAE-PFV	10400
MT R-404A 25°F Evap/90°F Ambient												
1/5	AE4425Z-AA1AGK	1500					M4TM-H020-IAA-*08	ASE12C4E-IAA	1580	M6TM-0020-IAA-108	ASE12C4E-IAA	1830
	AE4425Z-AA1ASC	1950								M6ZM-0021-IAA-177	ASE12C4E-IAA	1950
1/4	AE4430Z-AA1AXC	2170	UCGC0025R*B	2150			M4FH-0025-IAA-103	ASE19C3E-IAA	2430	M6JM-H023-IAA-177	ASE14C4E-IAA	2180
	AE4430Z-AA1AGC	2170					M4TM-H020-IAA-*18	ASE12C4E-IAA	1580	M6TM-0020-IAA-118	ASE12C4E-IAA	2180
	AE4430Z-AA1AGK	2170					M4TM-H020-IAA-*08	ASE12C4E-IAA	1580	M6TM-0020-IAA-108	ASE12C4E-IAA	2180
	AE4440Z-AA1ASC	2590	UCHC0025RWB000B	2650	UNE6187Z	2576				M6JM-H028-IAA-177	ASE20C4E-IAA	2730
1/3	AKA9430ZAADG	3401	UCHC0033RWB000B	3250	UFI12HBX	3263	M4FH-A036-IAA-103	ASE24C3E-IAA	3370	M6JM-H035-IAA-177	ASE28C5E-IAA	3390
1/2							M4FH-0050-CAA-103	ASE32C3E-CAA	4380	M6QM-H049-IAA-272	ASE39C5E-IAA	4250
							M4FH-0050-CAV-103	ASE32C3E-CAV	4380	M6QM-H049-CAV-078	ASE39C5E-CAV	4250
	AKA9442ZNADG	5162					M4FF-0050-IAV-212	RST45C1E-IAV	4660	M6ZP-0053-IAV-177	RST45C1E-IAV	4980
	AKA9442ZAADG	5162					M4FF-0050-IAA-212	RST45C1E-IAA	4660	M6ZP-0053-IAA-177	RST45C1E-IAA	4980
3/4	AKA9457ZNADG	6367								M6GP-H074-CAV-177	RST55C1E-CAV	6550
	AKA9463ZAADG	6969	UCHC0050RWB000B	7500			M4FF-0075-CAA	RST55C1E-CAA	6660	M6KP-0075-CFA-177	RST55C1E-CFA	6660
	AKA9463ZNADG	6969	UCHC0075U*N	7500			M4FF-0075-CAV	RST55C1E-CAV	6660	M6KP-0075-CAV-177	RST55C1E-CAV	6660
1	AJA7480ZNADG	8448	HCHC0100U*N	9000						M6KP-0095-CFV-177	RST70C1E-PFV	8310
	AJA7480ZNADC	8448										
	AJA7494ZXDXC	10279								M6RP-H126-CFV-072‡	RST97C1E-PFV	10500
	AWA7512ZXDXC	13142								FFAP-A17Z-CFV-072	ZS11KAE-PFV	12100
	AWA7512ZXTXC	13142	HCZC0150UWF300Q	12270						FFAP-A17Z-TFC-072	ZS11KAE-TF5	12100
2	AWA9518ZXTXM									FFAP-A30Z-TFC-072	ZS19KAE-TF5	19300
3	AVA7523ZXTXC	24781								FFAP-A32Z-TFC-072	ZS21KAE-TF5	24800
LT R-134a -10°F Evap/90°F Ambient												
1/4	AE2410Y-AA1ASC	910			UF10HBX	960				M7QP-H022-IAA-078	AFF07C1E-IAA	874
1/3	AE2413Y-AA1BSC	1310			UFI12HBX	1362				M7JP-H032-IAA-078	AFF10C1E-IAA	1330
1/2	AJA2423YAADG	2321					M2FF-0056-CFA-212	RFT18C1E-PFA	2580	M7GP-H066-CFA-177	RFT18C1E-PFA	2650
										M7KH-0060-CFA-177	RRT64C1E-CFA	2300
MT R-134a 25°F Evap/90°F Ambient												
1/4							M2FH-0026-IAA-103	ARE27C3E-IAA	2080	M7QH-H021-IAA-078	ARE25C4E-IAA	1980
1/3							M2FH-A033-IAA-103	ARE37C3E-IAA	2620	M7JH-H029-IAA-177	ARE35C5E-IAA	2640
1/2							M2FH-0049-IAA-103	ART51C1E-IAA	3600	M7ZH-0041-IAA-177	ARE48C5E-IAA	3750
	AKA7437YAADG	4080	UCGC0050R*	4250			M2FH-A050-IAA-103	RRT62C1E-IAA	4060	M7ZH-H046-IAA-177	RRT62C1E-IAA	4210
	AJA7455YAADG	6116	HCGC0075UWC000B	7150			M2FH-0056-IAA-103	ART64C1E-IAA	4630	M7KH-0064-CAA-177	RRT73C1E-CAA	5890
	AJA7455YNADG	6116					M2FH-0056-IAV-103	ART64C1E-IAV	4630	M7KH-0064-CAV-177	RRT73C1E-CAV	5890
	AJA7455YNADC	6116								M7KH-0064-CAV-177	RRT73C1E-CAV	5890
HT R-134a 45°F Evap/90°F Ambient												
1/5	AE3425Y-AA1ASK	2696	UCGC0020RWA000B	2700	UM65HHR	2600	M2FH-0026-IAA	ARE27C3E-IAA	2940	M7JH-0018-IAA-179	ARE25C4E-IAA	2690
1/4	AE4430Y-AA1ASB	3080	UCGC0025RWB000B	3100			M2FH-0025-IAA	ARE27C3E-IAA	2850	M7JH-H020-IAA-177	ARE25C4E-IAA	2960
	AE4430Y-AA1ASC	3080	UCGC0025RWB000B	3100			M2FH-0025-IAA	ARE27C3E-IAA	2850	M7JH-H020-IAA-177	ARE25C4E-IAA	2960
	AE4430Y-AA1ASK	3080	UCGC0025R*B	3100			M2FH-0025-IAA	ARE27C3E-IAA	2850	M7JH-H020-IAA-179	ARE25C4E-IAA	2960
	AE4430Y-AA1ASS	3080	UCGC0025R*B	3100			M2FH-0025-IAA	ARE27C3E-IAA	2850	M7JH-H020-IAA-179	ARE25C4E-IAA	2960
	AE4430Y-AA1AGB	3080								M7TH-0020-IAA-118	ARE25C4E-IAA	2900
1/3	AE4440Y-AA1ASB	3650	HCGC0033RWB000B	4450	UNE6187Z	4371	M2FH-A033-IAA	ARE37C3E-IAA	3820	M7JH-H024-IAA-177	ARE29C4E-IAA	3390
	AE4440Y-AA1ASC	3650	HCGC0033RWB000B	4450	UNE6187Z	4371	M2FH-A033-IAA	ARE37C3E-IAA	3820	M7JH-H024-IAA-177	ARE29C4E-IAA	3390
	AE4440Y-AA1ASK	3650	HCGC0033R*B	4450	UNE6187Z	4371	M2FH-A033-IAA	ARE37C3E-IAA	3820	M7JH-H024-IAA-179	ARE29C4E-IAA	3390
	AE4440Y-AA1ASS	3650	HCGC0033R*B	4450	UNE6187Z	4371	M2FH-A033-IAA	ARE37C3E-IAA	3820	M7JH-H024-IAA-179	ARE29C4E-IAA	3390
	AE4440Y-AA1AGK	3650								M7TH-0028-IAA-108	ARE35C5E-IAA	3830
	AE4440Y-AA1AGB	3650								M7TH-0028-IAA-118	ARE35C5E-IAA	3830
	AE4440Y-AA1AGC	3650								M7TH-0028-IAA-118	ARE35C5E-IAA	3830
1/2	AE4450Y-AA1ADC	5005			UNE6210Z	4989	M2CH-H049-CAA	ARE51C4E-CAA	5260	M7ZH-0045-IAA-177	ARE54C5E-IAA	5760
	AE4450Y-AA1ADS	5005			UNE6210Z	4989	M2CH-H049-CAA	ARE51C4E-CAA	5260	M7ZH-0045-IAA-179	ARE54C5E-IAA	5760
	AKA4457YAADG	5665	UCGC0050R*B	6150	UT6213ZA	5892	M2FH-H048-CAA	ARE51C4E-CAA	5440	M7ZH-0045-IAA-177	ARE54C5E-IAA	5760
	AKA4457YAADC	5665	UCGC0050R*B	6150	UT6213ZA	5892	M2FH-H048-CAA	ARE51C4E-CAA	5440	M7ZH-0045-IAA-177	ARE54C5E-IAA	5760
	AKA4457YAADK	5665	UCGC0050R*B	6150	UT6213ZA	5892	M2FH-H048-CAA	ARE51C4E-CAA	5440	M7ZH-0045-IAA-179	ARE54C5E-IAA	5760
	AKA4457YAADS	5665	UCGC0050R*B	6150	UT6213ZA	5892	M2FH-H048-CAA	ARE51C4E-CAA	5440	M7ZH-0045-IAA-179	ARE54C5E-IAA	5760
	AKA4457YNADG	5665								M7ZH-0045-IAV-177	ARE54C5E-IAV	5760
	AKA4472YAADG	7187	HCGC0055UWC000B	7350	UT6215ZC	6704				M7ZH-H055-CFA-177	RRT64C1E-CFA	7050
3/4	AJA4480YAADG	7550	HCGC0055UWC000B	7350	UT6217E	7683				M7KH-0060-CFA-177	RRT64C1E-CFA	7690
	AJA4480YNADG	7550	HCGC0055UWC000B	7350						M7KH-0060-CAV-177	RRT64C1E-CAV	7690
1	AJA4512YXDXC	12200	HCGC0075UWC000B	11200						FFAP-A17Z-CFV-072	ZS11KAE-PFV	13100

The recommended cross applies at the conditions listed. Review the operating envelope of the recommended unit to confirm operation at the specific required conditions.

* Specific configuration not identified. Multiple options may be available.

‡ Physical dimension differences. Check available space.

F-LINE AIR COOLED CONDENSING UNITS

Copeland F-Line Air Cooled Condensing Units
Medium Temp & High Temp

Medium Temp Air Cooled			90° Ambient											
HP	Model	Refrigerant	Capacity (BTU/Hr) @ SST, 40°F RG (65°F RG in Bold), 5°F Subcooling											
			-5	0	5	10	15	20	25	25	30	35	40	45
3/4	FFAM-A08Z	R-134a			2800	3200	3640	4130	4680	**4770**	**5340**	**5950**	**6620**	**7320**
		R-407A	3560	3950	4420	4950	5550	6200	6920	**7040**	**7820**	**8640**	**9520**	**10400**
		R-407C	3090	3580	4090	4640	5230	5850	6520	**6610**	**7320**	**8070**	**8870**	**9710**
		R-448A	3600	4060	4570	5120	5720	6360	7030	**7160**	**7880**	**8650**	**9450**	**10300**
		R-449A	3620	4080	4590	5140	5730	6370	7050	**7170**	**7900**	**8660**	**9450**	**10300**
1	FFAM-A10Z	R-134a			3440	3920	4460	5030	5640	**5740**	**6400**	**7120**	**7880**	**8690**
		R-407A	4120	4720	5360	6050	6770	7530	8320	**8460**	**9290**	**10100**	**11000**	**11900**
		R-407C	3740	4280	4870	5500	6180	6910	7670	**7780**	**8600**	**9450**	**10300**	**11200**
		R-448A	4240	4780	5370	6010	6710	7460	8250	**8410**	**9250**	**10100**	**11100**	**12000**
		R-449A	4260	4790	5380	6030	6720	7470	8250	**8410**	**9250**	**10100**	**11000**	**12000**
1 1/4	FFAM-A12Z	R-134a			4090	4640	5270	5960	6700	**6810**	**7600**	**8440**	**9340**	**10300**
		R-407A	4960	5730	6520	7330	8160	9010	9870	**10000**	**10900**	**11900**	**12800**	**13700**
		R-407C	4560	5190	5860	6580	7360	8190	9090	**9210**	**10200**	**11200**	**12300**	**13500**
		R-448A	5100	5720	6420	7190	8030	8930	9900	**10100**	**11100**	**12200**	**13300**	**14400**
		R-449A	5110	5720	6420	7190	8030	8930	9890	**10100**	**11100**	**12200**	**13300**	**14400**
1 1/2	FFAP-A15Z	R-134a	3680	4210	4790	5420	6100	6810	7580	**7700**	**8540**	**9430**	**10400**	**11400**
		R-407A	6010	6700	7430	8220	9070	9990	11000	**11200**	**12200**	**13400**	**14700**	**16100**
		R-407C	4910	5770	6660	7580	8530	9520	10500	**10700**	**11700**	**12900**	**14000**	**15200**
		R-448A	5490	6130	6810	7560	8390	9310	10300	**10500**	**11700**	**13000**	**14400**	**15900**
		R-449A	5490	6130	6810	7560	8390	9310	10300	**10500**	**11700**	**13000**	**14300**	**15900**
1 3/4	FFAP-A17Z	R-134a	4400	5030	5720	6440	7210	8030	8920	**9080**	**10000**	**11100**	**12200**	**13400**
		R-407A	7090	7890	8740	9650	10600	11700	12800	**13000**	**14300**	**15600**	**17100**	**18600**
		R-407C	5800	6820	7860	8940	10000	11200	12400	**12500**	**13800**	**15100**	**16400**	**17700**
		R-448A	6560	7310	8110	8990	9950	11000	12200	**12400**	**13800**	**15200**	**16800**	**18500**
		R-449A	6560	7310	8110	8980	9950	11000	12200	**12400**	**13800**	**15200**	**16800**	**18500**
2	FFAP-A20Z	R-134a	5020	5750	6530	7390	8280	9230	10200	**10400**	**11500**	**12700**	**14000**	**15400**
		R-407A	8150	9080	10100	11100	12300	13500	14800	**15100**	**16500**	**18100**	**19800**	**21600**
		R-407C	6670	7840	9040	10300	11600	12900	14300	**14400**	**15900**	**17400**	**18900**	**20500**
		R-448A	7510	8370	9300	10300	11400	12700	14000	**14300**	**15900**	**17500**	**19400**	**21400**
		R-449A	7510	8370	9300	10300	11400	12700	14000	**14300**	**15900**	**17500**	**19400**	**21400**
2 1/4	FFAP-A22Z	R-134a	6060	6930	7870	8910	10000	11300	12600	**12800**	**14200**	**15700**	**17400**	**19100**
		R-407A	9330	10600	11900	13400	14900	16600	18500	**18700**	**20700**	**22800**	**25100**	**27500**
		R-407C	8130	9560	11000	12600	14200	15800	17600	**17800**	**19600**	**21500**	**23500**	**25600**
		R-448A	9120	10200	11300	12600	14000	15600	17300	**17600**	**19600**	**21800**	**24200**	**26800**
		R-449A	9110	10200	11300	12600	14000	15600	17300	**17600**	**19600**	**21800**	**24200**	**26800**
3	FFAP-A30Z	R-134a	6840	7820	8880	10000	11300	12700	14100	**14400**	**15900**	**17600**	**19400**	**21300**
		R-407A	11200	12500	13800	15300	16900	18600	20500	**20800**	**22900**	**25100**	**27600**	**30200**
		R-407C	9110	10700	12400	14100	15900	17700	19700	**19900**	**21900**	**24000**	**26200**	**28500**
		R-448A	10300	11600	12900	14300	15800	17400	19300	**19600**	**21700**	**24100**	**26700**	**29600**
		R-449A	10300	11600	12900	14200	15800	17400	19300	**19600**	**21700**	**24100**	**26700**	**29600**
3 1/4	FFAP-A32Z	R-134a	9190	10500	11900	13400	15000	16700	18600	**18900**	**20900**	**23100**	**25400**	**27800**
		R-407A	14500	16100	17900	19700	21700	23900	26200	**26600**	**29200**	**31900**	**34900**	**38100**
		R-407C	12100	14200	16300	18600	20900	23300	25700	**26100**	**28600**	**31300**	**34100**	**36900**
		R-448A	14100	15900	17800	19800	21900	24100	26400	**26900**	**29300**	**31800**	**34500**	**37200**
		R-449A	14100	15900	17800	19800	21900	24100	26400	**26800**	**29300**	**31800**	**34400**	**37100**
4	FFAP-A40Z	R-134a	10200	11700	13200	15000	16900	18900	21100	**21500**	**23800**	**26300**	**29000**	**31900**
		R-407A	15500	17600	19800	22200	24800	27700	30700	**31100**	**34400**	**37900**	**41700**	**45700**
		R-407C	13600	16000	18500	21000	23700	26500	29400	**29700**	**32800**	**36000**	**39300**	**42800**
		R-448A	15600	17400	19400	21700	24200	26800	29700	**30200**	**33300**	**36700**	**40300**	**44100**
		R-449A	15600	17400	19400	21700	24100	26800	29700	**30200**	**33300**	**36700**	**40300**	**44100**
4 1/4	FFAP-A42Z	R-134a	12700	14500	16400	18600	20800	23200	25800	**26300**	**29100**	**32100**	**35300**	**38800**
		R-407A	20600	23000	25500	28100	31000	34200	37500	**38100**	**41900**	**45900**	**50000**	**55000**
		R-407C	16600	19600	22600	25800	29000	32400	35900	**36300**	**40000**	**43800**	**47800**	**52000**
		R-448A	19800	22400	25100	28000	31000	34200	37500	**38100**	**41700**	**45400**	**49300**	**53500**
		R-449A	19800	22400	25100	27900	30900	34100	37400	**38100**	**41700**	**45400**	**49300**	**53500**
5	FFAP-050Z	R-134a	14800	16800	18800	21100	23600	26200	29000	**29600**	**32600**	**35900**	**39400**	**43100**
		R-407A	22600	25500	28700	32000	35500	39200	43000	**43700**	**47700**	**52000**	**56000**	**60000**
		R-407C	22300	25200	28300	31600	35000	38700	42400	**43000**	**46900**	**51000**	**55000**	**59000**
		R-448A	22300	25300	28600	32100	35800	39700	43700	**44500**	**48700**	**53000**	**57500**	**61500**
		R-449A	22300	25300	28600	32100	35800	39700	43700	**44500**	**48700**	**53000**	**57500**	**61500**
6	FFAP-060Z	R-134a	17500	19800	22300	24900	27800	30900	34200	**34800**	**38400**	**42200**	**46300**	**50500**
		R-407A	26900	30300	33900	37700	41700	45900	50000	**51000**	**56000**	**60500**	**65500**	**70000**
		R-407C		29900	33400	37200	41200	45300	49600	**50500**	**55000**	**59500**	**64500**	**69000**
		R-448A	26300	29800	33500	37500	41700	46100	50500	**51500**	**56500**	**61500**	**66500**	**71500**
		R-449A	26300	29800	33500	37500	41700	46100	50500	**51500**	**56500**	**61500**	**66500**	**71500**

F-LINE AIR COOLED CONDENSING UNITS

Copeland F-Line Air Cooled Condensing Units
Extended Medium Temp & Low Temp

Extended Medium Temperature - Low Temperature / Air Cooled			90°F Ambient										
HP	Model	Refrigerant	Capacity (BTU/Hr) @SST, 40°F RG, 5°F Subcooling										
			-40	-35	-30	-25	-20	-15	-10	-5	0	5	10
1	FFAL-A10Z	R-407A	1770	1980	2220	2480	2780	3130	3510	3950	4430	4970	5570
		R-448A	1810	2040	2300	2580	2890	3230	3620	4060	4550	5110	5730
		R-449A	1830	2070	2320	2600	2910	3260	3650	4090	4590	5140	5760
1 1/4	FFAL-A13Z	R-407A	2200	2460	2780	3180	3640	4160	4750	5390	6090	6840	7640
		R-448A	2250	2540	2890	3300	3780	4300	4890	5530	6210	6950	7730
		R-449A	2270	2560	2920	3330	3810	4340	4920	5560	6240	6970	7750
1 1/2	FFAL-A14Z	R-407A	2520	2870	3300	3800	4380	5020	5740	6520	7360	8270	9240
		R-448A	2650	3030	3490	4010	4600	5240	5950	6710	7540	8410	9340
		R-449A	2660	3050	3510	4030	4620	5270	5980	6740	7560	8440	9360
	FFAL-A15Z	R-407A	3500	4060	4680	5350	6090	6900	7790	8760	9820		
		R-448A	3640	4190	4790	5460	6200	7010	7890	8850	9900		
		R-449A	3660	4210	4810	5480	6220	7030	7910	8880	9920		
1 3/4	FFAL-A17Z	R-407A	4030	4710	5430	6180	6990	7870	8820	9860	11000	12200	13600
		R-448A	4160	4840	5530	6260	7040	7890	8830	9870	11000	12300	13800
		R-449A	4180	4860	5560	6280	7070	7920	8850	9890	11000	12300	13800
2 1/4	FFAL-A22Z	R-407A	4670	5460	6330	7280	8330	9470	10700	12100	13600		
		R-448A	4950	5800	6670	7600	8590	9670	10800	12100	13600		
		R-449A	4950	5800	6680	7600	8600	9670	10900	12100	13600		
		R-407A	4670	5470	6340	7290	8330	9470	10700	12100	13500		
		R-448A	4950	5800	6680	7600	8590	9670	10800	12100	13500		
		R-449A	4950	5800	6680	7600	8600	9670	10800	12100	13500		
2 1/2	FFAL-A26Z	R-407A	5760	6750	7820	8990	10300	11800	13400	15300	17300		
		R-448A	6910	7830	8860	9990	11200	12600	14100	15600	17300		
		R-449A	6910	7830	8850	9990	11200	12600	14100	15600	17300		
		R-407A	6640	7400	8430	9670	11100	12600	14100	15600	17100		
		R-448A	6880	7870	8960	10100	11500	12900	14400	16000	17800		
		R-449A	6870	7860	8950	10100	11500	12900	14400	16000	17800		
3	FFAL-A30Z	R-407A	7650	8580	9800	11300	13000	14800	16800	18800	21000		
		R-448A	8060	8990	10100	11500	13100	14800	16700	18700	20900		
		R-449A	8060	8990	10100	11500	13100	14800	16700	18700	20900		
		R-407A	7660	8520	9640	11000	12600	14300	16200	18200	20300		
		R-448A	7880	8990	10300	11700	13300	15000	16900	18900	21000		
		R-449A	7870	8990	10300	11700	13300	15000	16900	18900	21000		
4	FFAL-A40Z	R-407A	9810	10900	12300	13900	15800	17900	20100	22500	24900		
		R-448A	9610	10900	12400	14000	15900	17900	20000	22300	24800		
		R-449A	9600	10900	12400	14000	15900	17900	20000	22300	24800		
		R-407A	9670	10700	11900	13500	15300	17300	19500	21900	24400		
		R-448A	9920	11200	12700	14400	16200	18200	20300	22600	25000		
		R-449A	9910	11200	12700	14400	16200	18200	20300	22600	25000		
5	FFAL-A50Z	R-407A	11500	12700	14300	16100	18300	20600	23200	25800	28700		
		R-448A	11900	13500	15300	17200	19300	21600	24000	26500	29100		
		R-449A	11900	13500	15300	17200	19300	21600	23900	26500	29100		

F-LINE AIR COOLED CONDENSING UNITS

Copeland F-LINE Air Cooled Condensing Units

	Refrigerant Connections							Receiver Capacity (Lbs @ 90% Volume)								
Model Number*	Compressor	Voltage	Length	Width	Height	Liquid	Suction	R-134a	R-404A	R-407A	R-407C	R-448A / R449A	R-513A	MCA	Max Over-current Protection	Ship Weight
FFAL-A10Z-CFV-072	ZF03KAE	208/230-1	24.91	18.82	17.77	3/8 S	7/8 S	8.6	7.3	8.1	8.0	7.8/7.8	8.1	8.6	15.0	111
FFAL-A10Z-CFV-075	ZF03KAE	208/230-1	24.91	19.46	17.77	3/8 S	7/8 S	14.0	12.0	13.2	13.2	12.7/12.8	13.2	8.6	15.0	135
FFAL-A10Z-TFC-072	ZF03KAE	208/230-3	24.91	18.82	17.77	3/8 S	7/8 S	8.6	7.3	8.1	8.0	7.8/7.8	8.1	6.1	15.0	117
FFAL-A10Z-TFC-075	ZF03KAE	208/230-3	24.91	19.46	17.77	3/8 S	7/8 S	14.0	12.0	13.2	13.2	12.7/12.8	13.2	6.1	15.0	135
FFAL-A13Z-CFV-072	ZF04KAE	208/230-1	24.91	18.82	17.77	3/8 S	7/8 S	8.6	7.3	8.1	8.0	7.8/7.8	8.1	10.3	15.0	122
FFAL-A13Z-CFV-075	ZF04KAE	208/230-1	24.91	19.46	17.77	3/8 S	7/8 S	14.0	12.0	13.2	13.2	12.7/12.8	13.2	10.3	15.0	119
FFAL-A13Z-TFC-072	ZF04KAE	208/230-3	24.91	18.82	17.77	3/8 S	7/8 S	8.6	7.3	8.1	8.0	7.8/7.8	8.1	9.3	15.0	119
FFAL-A13Z-TFC-075	ZF04KAE	208/230-3	24.91	19.46	17.77	3/8 S	7/8 S	14.0	12.0	13.2	13.2	12.7/12.8	13.2	9.3	15.0	119
FFAL-A14Z-CFV-072	ZF05KAE	208/230-1	24.86	20.42	19.08	3/8 S	7/8 S	15.2	13.0	14.3	14.2	13.8/13.8	14.3	12.2	15.0	118
FFAL-A14Z-CFV-075	ZF05KAE	208/230-1	24.86	20.97	19.08	3/8 S	7/8 S	15.2	13.0	14.3	14.2	13.8/13.8	14.3	12.2	15.0	88
FFAL-A14Z-TFC-072	ZF05KAE	208/230-3	24.86	20.42	19.08	3/8 S	7/8 S	15.2	13.0	14.3	14.2	13.8/13.8	14.3	10.7	15.0	116
FFAL-A14Z-TFC-075	ZF05KAE	208/230-3	24.86	20.97	19.08	3/8 S	7/8 S	15.2	13.0	14.3	14.2	13.8/13.8	14.3	10.7	15.0	126
FFAL-A14Z-TFD-072	ZF05KAE	460-3	24.86	20.42	19.08	3/8 S	7/8 S	15.2	13.0	14.3	14.2	13.8/13.8	14.3	5.7	15.0	99
FFAL-A14Z-TFD-075	ZF05KAE	460-3	24.86	20.97	19.08	3/8 S	7/8 S	15.2	13.0	14.3	14.2	13.8/13.8	14.3	5.7	15.0	98
FFAL-A15Z-CFV-072	ZF06KAE	208/230-1	24.86	20.42	19.08	3/8 S	7/8 S	15.2	13.0	14.3	14.2	13.8/13.8	14.3	18.4	30.0	127
FFAL-A15Z-CFV-075	ZF06KAE	208/230-1	24.86	20.97	19.08	3/8 S	7/8 S	15.2	13.0	14.3	14.2	13.8/13.8	14.3	18.4	30.0	151
FFAL-A15Z-TFC-072	ZF06KAE	208/230-3	24.86	20.42	19.08	3/8 S	7/8 S	15.2	13.0	14.3	14.2	13.8/13.8	14.3	11.7	15.0	119
FFAL-A15Z-TFC-075	ZF06KAE	208/230-3	24.86	20.97	19.08	3/8 S	7/8 S	15.2	13.0	14.3	14.2	13.8/13.8	14.3	11.7	15.0	151
FFAL-A15Z-TFD-072	ZF06KAE	460-3	24.86	20.42	19.08	3/8 S	7/8 S	15.2	13.0	14.3	14.2	13.8/13.8	14.3	6.7	15.0	100
FFAL-A15Z-TFD-075	ZF06KAE	460-3	24.86	20.97	19.08	3/8 S	7/8 S	15.2	13.0	14.3	14.2	13.8/13.8	14.3	6.7	15.0	99
FFAL-A17Z-CFV-072	ZF07KAE	208/230-1	24.86	20.42	19.08	3/8 S	7/8 S	15.2	13.0	14.3	14.2	13.8/13.8	14.3	18.7	30.0	117
FFAL-A17Z-CFV-075	ZF07KAE	208/230-1	24.86	20.97	19.08	3/8 S	7/8 S	15.2	13.0	14.3	14.2	13.8/13.8	14.3	18.7	30.0	117
FFAL-A17Z-TFC-072	ZF07KAE	208/230-3	24.86	20.42	19.08	3/8 S	7/8 S	15.2	13.0	14.3	14.2	13.8/13.8	14.3	12.1	15.0	116
FFAL-A17Z-TFC-075	ZF07KAE	208/230-3	24.86	20.97	19.08	3/8 S	7/8 S	15.2	13.0	14.3	14.2	13.8/13.8	14.3	12.1	15.0	117
FFAL-A22Z-CFV-072	ZF09KAE	208/230-1	34.03	25.09	18.87	3/8 S	7/8 S	18.1	15.5	17.1	17.0	16.4/16.5	17.0	21.9	35.0	166
FFAL-A22Z-CFV-075	ZF09KAE	208/230-1	34.12	25.09	23.1	3/8 S	7/8 S	28.4	24.2	26.7	26.6	25.7/25.8	26.6	21.9	35.0	166
FFAL-A22Z-TFC-072	ZF09KAE	208/230-3	34.03	25.09	18.87	3/8 S	7/8 S	18.1	15.5	17.1	17.0	16.4/16.5	17.0	15.7	20.0	213
FFAL-A22Z-TFC-075	ZF09KAE	208/230-3	34.12	25.09	23.1	3/8 S	7/8 S	28.4	24.2	26.7	26.6	25.7/25.8	26.6	15.7	20.0	213
FFAL-A22Z-TFD-072	ZF09KAE	460-3	34.03	25.09	18.87	3/8 S	7/8 S	18.1	15.5	17.1	17.0	16.4/16.5	17.0	8.4	15.0	224
FFAL-A22Z-TFD-075	ZF09KAE	460-3	34.12	25.09	23.1	3/8 S	7/8 S	28.4	24.2	26.7	26.6	25.7/25.8	26.6	8.4	15.0	224
FFAL-A26Z-CFV-072	ZF11K4E	208/230-1	34.03	25.09	19.29	3/8 S	7/8 S	18.1	15.5	17.1	17.0	16.4/16.5	17.0	28.0	45.0	208
FFAL-A26Z-CFV-075	ZF11K4E	208/230-1	34.12	25.09	23.1	3/8 S	7/8 S	28.4	24.2	26.7	26.6	25.7/25.8	26.6	28.0	45.0	208
FFAL-A26Z-TFC-072	ZF11K4E	208/230-3	34.03	25.09	19.29	3/8 S	7/8 S	18.1	15.5	17.1	17.0	16.4/16.5	17.0	19.8	30.0	175
FFAL-A26Z-TFC-075	ZF11K4E	208/230-3	34.12	25.09	23.1	3/8 S	7/8 S	28.4	24.2	26.7	26.6	25.7/25.8	26.6	19.8	30.0	175
FFAL-A26Z-TFD-072	ZF11K4E	460-3	34.03	25.09	19.29	3/8 S	7/8 S	18.1	15.5	17.1	17.0	16.4/16.5	17.0	11.2	15.0	220
FFAL-A26Z-TFD-075	ZF11K4E	460-3	34.12	25.09	23.1	3/8 S	7/8 S	28.4	24.2	26.7	26.6	25.7/25.8	26.6	11.2	15.0	220
FFAL-A30Z-CFV-072	ZF13K4E	208/230-1	34.06	25.04	20.01	3/8 S	7/8 S	18.1	15.5	17.1	17.0	16.4/16.5	17.0	36.2	60.0	243
FFAL-A30Z-CFV-075	ZF13K4E	208/230-1	34.06	25.04	23.09	3/8 S	7/8 S	28.4	24.2	26.7	26.6	25.7/25.8	26.6	36.2	60.0	243
FFAL-A30Z-TFC-072	ZF13K4E	208/230-3	34.06	25.04	20.01	3/8 S	7/8 S	18.1	15.5	17.1	17.0	16.4/16.5	17.0	21.5	30.0	237
FFAL-A30Z-TFC-075	ZF13K4E	208/230-3	34.06	25.04	23.09	3/8 S	7/8 S	28.4	24.2	26.7	26.6	25.7/25.8	26.6	21.5	30.0	237
FFAL-A30Z-TFD-072	ZF13K4E	460-3	34.06	25.04	20.01	3/8 S	7/8 S	18.1	15.5	17.1	17.0	16.4/16.5	17.0	13.4	15.0	150
FFAL-A30Z-TFD-075	ZF13K4E	460-3	34.06	25.04	23.09	3/8 S	7/8 S	28.4	24.2	26.7	26.6	25.7/25.8	26.6	13.4	15.0	150
FFAL-A40Z-CFV-072	ZF15K4E	208/230-1	34.06	25.04	20.01	3/8 S	7/8 S	18.1	15.5	17.1	17.0	16.4/16.5	17.0	42.5	70.0	264
FFAL-A40Z-CFV-075	ZF15K4E	208/230-1	34.06	25.04	23.09	3/8 S	7/8 S	28.4	24.2	26.7	26.6	25.7/25.8	26.6	42.5	70.0	264
FFAL-A40Z-TFC-072	ZF15K4E	208/230-3	34.06	25.04	20.01	3/8 S	7/8 S	18.1	15.5	17.1	17.0	16.4/16.5	17.0	29.5	45.0	195
FFAL-A40Z-TFC-075	ZF15K4E	208/230-3	34.06	25.04	23.09	3/8 S	7/8 S	28.4	24.2	26.7	26.6	25.7/25.8	26.6	29.5	45.0	195
FFAL-A40Z-TFD-072	ZF15K4E	460-3	34.06	25.04	20.01	3/8 S	7/8 S	18.1	15.5	17.1	17.0	16.4/16.5	17.0	15.2	20.0	86
FFAL-A40Z-TFD-075	ZF15K4E	460-3	34.06	25.04	23.09	3/8 S	7/8 S	28.4	24.2	26.7	26.6	25.7/25.8	26.6	15.2	20.0	86
FFAL-A50Z-TFC-072	ZF18K4E	208/230-3	34.06	25.04	20.01	3/8 S	7/8 S	18.1	15.5	17.1	17.0	16.4/16.5	17.0	32.6	50.0	187
FFAL-A50Z-TFC-075	ZF18K4E	208/230-3	34.06	25.04	20.01	3/8 S	7/8 S	28.4	24.2	26.7	26.6	25.7/25.8	26.6	32.6	50.0	187
FFAL-A50Z-TFD-072	ZF18K4E	460-3	34.06	25.04	20.01	3/8 S	7/8 S	18.1	15.5	17.1	17.0	16.4/16.5	17.0	14.8	20.0	187
FFAL-A50Z-TFD-075	ZF18K4E	460-3	34.06	25.04	23.09	3/8 S	7/8 S	28.4	24.2	26.7	26.6	25.7/25.8	26.6	14.8	20.0	187
FFAM-A08Z-CFV-072	ZB06KAE	208/230-1	24.12	18.33	16.45	3/8 S	7/8 S	8.6	7.3	8.1	8.0	7.8/7.8	8.1	8.5	15.0	104
FFAM-A08Z-CFV-075	ZB06KAE	208/230-1	24.08	18.92	16.31	3/8 S	7/8 S	14.0	12.0	13.2	13.2	12.7/12.8	13.2	8.5	15.0	104
FFAM-A08Z-TFC-072	ZB06KAE	208/230-3	24.12	18.33	16.45	3/8 S	7/8 S	8.6	7.3	8.1	8.0	7.8/7.8	8.1	7.0	15.0	93
FFAM-A08Z-TFC-075	ZB06KAE	208/230-3	24.08	18.92	16.31	3/8 S	7/8 S	14.0	12.0	13.2	13.2	12.7/12.8	13.2	7.0	15.0	104
FFAM-A10Z-CFV-075	ZB07KAE	208/230-1	24.08	18.92	16.31	3/8 S	7/8 S	14.0	12.0	13.2	13.2	12.7/12.8	13.2	8.9	15.0	104
FFAM-A10Z-TFC-072	ZB07KAE	208/230-3	24.12	18.33	16.45	3/8 S	7/8 S	8.6	7.3	8.1	8.0	7.8/7.8	8.1	7.5	15.0	94
FFAM-A10Z-TFC-075	ZB07KAE	208/230-3	24.08	18.92	16.31	3/8 S	7/8 S	14.0	12.0	13.2	13.2	12.7/12.8	13.2	7.5	15.0	104
FFAM-A12Z-CFV-072	ZB08KAE	208/230-1	24.12	18.33	16.45	3/8 S	7/8 S	8.6	7.3	8.1	8.0	7.8/7.8	8.1	11.4	15.0	104
FFAM-A12Z-CFV-075	ZB08KAE	208/230-1	24.08	18.92	16.31	3/8 S	7/8 S	14.0	12.0	13.2	13.2	12.7/12.8	13.2	11.4	15.0	104
FFAM-A12Z-TFC-072	ZB08KAE	208/230-3	24.12	18.33	16.45	3/8 S	7/8 S	8.6	7.3	8.1	8.0	7.8/7.8	8.1	8.0	15.0	104
FFAM-A12Z-TFC-075	ZB08KAE	208/230-3	24.08	18.92	16.31	3/8 S	7/8 S	14.0	12.0	13.2	13.2	12.7/12.8	13.2	8.0	15.0	104

*Not all available models are listed. Please visit Climate.Emerson.com/OPI to see all available models.

F-LINE WATER COOLED CONDENSING UNITS

Copeland F-LINE Water Cooled Condensing Units

						Refrigerant Connections		Receiver Capacity (Lbs @ 90% Volume)								
Model Number*	Compressor	Voltage	Length	Width	Height	Liquid	Suction	R-134a	R-407A	R-407C	R-448A / R449A	R-450A	R-513A	MCA	Max Over-current Protection	Ship Weight
FFWP-015Z-CFV-020	ZS09KAE	208/230-1	24.04	16.1	16.63	3/8 S	7/8 S	13.9	13.1	13.0				12.5	20	107
FFWP-015Z-TFC-020	ZS09KAE	200/220-3	24	16.1	16.63	3/8 S	7/8 S	13.9	13.1	13.0				10	15	107
FFWP-015Z-TFD-020	ZS09KAE	460-3	24	16.1	16.63	3/8 S	7/8 S	13.9	13.1	13.0				4.8	15	107
FFWP-017Z-CFV-020	ZS11KAE	208/230-1	24	16.1	16.63	3/8 S	7/8 S	13.9	13.1	13.0				15.8	25	105
FFWP-017Z-TFC-020	ZS11KAE	200/220-3	24	16.1	16.63	3/8 S	7/8 S	13.9	13.1	13.0				13	20	105
FFWP-017Z-TFD-020	ZS11KAE	460-3	24	16.1	16.63	3/8 S	7/8 S	13.9	13.1	13.0				5.4	15	105
FFWP-020Z-CFV-020	ZS13KAE	208/230-1	24	16.1	16.63	3/8 S	7/8 S	13.9	13.1	13.0				15	25	101
FFWP-020Z-TFC-020	ZS13KAE	200/220-3	24	16.1	16.63	3/8 S	7/8 S	13.9	13.1	13.0				12.1	20	107
FFWP-020Z-TFD-020	ZS13KAE	460-3	24	16.1	16.63	3/8 S	7/8 S	13.9	13.1	13.0				6	15	107
FFWP-022Z-CFV-020	ZS15KAE	208/230-1	24	16.1	16.63	3/8 S	7/8 S	13.9	13.1	13.0				19.6	35	105
FFWP-022Z-TFC-020	ZS15KAE	200/220-3	24	16.1	16.63	3/8 S	7/8 S	13.9	13.1	13.0				13.3	20	106
FFWP-022Z-TFD-020	ZS15KAE	460-3	24	16.1	16.6	3/8 S	7/8 S	13.9	13.1	13.0				6.8	15	106
FFWP-030Z-CFV-020	ZS19KAE	208/230-1	24.1	16.1	16.6	3/8 S	7/8 S	13.9	13.1	13.0				22.5	40	105
FFWP-030Z-TFC-020	ZS19KAE	200/220-3	24.06	16.1	16.66	3/8 S	7/8 S	13.9	13.1	13.0				17.1	30	75
FFWP-030Z-TFD-020	ZS19KAE	460-3	24.06	16.1	16.66	3/8 S	7/8 S	13.9	13.1	13.0				8.1	15	106
FFWP-032Z-CFV-020	ZS21KAE	208/230-1	27.2	21.5	18.2	3/8 S	1-1/8 S	No data shown in drawing						29	50	171
FFWP-032Z-TFC-020	ZS21KAE	200/220-3	27.34	21	18.2	3/8 S	1-1/8 S	No data shown in drawing						19	30	168
FFWP-032Z-TFD-020	ZS21KAE	460-3	27.34	21	18.2	3/8 S	1-1/8 S	No data shown in drawing						8.6	15	168
FFWP-040Z-CFV-020	ZS26KAE	208/230-1	27.5	21	21.1	1/2 S	1-1/8 S	23.9	22.5	22.4				29.5	50	191
FFWP-040Z-TFC-020	ZS26KAE	200/220-3	27.6	21	21.12	1/2 S	1-1/8 S	23.9	22.5	22.4				19.4	30	191
FFWP-040Z-TFD-020	ZS26KAE	460-3	27.6	21	21.12	1/2 S	1-1/8 S	23.9	22.5	22.4				8.6	15	195
FFWP-042Z-CFV-020	ZS33KAE	208/230-1	27.2	21.6	21.1	1/2 S	1-1/8 S	15.3	14.4	14.3				35.3	60	197
FFWP-042Z-TFC-020	ZS33KAE	200/220-3	27.47	21	21.13	1/2 S	1-1/8 S	15.3	14.4	14.3				27.9	50	198
FFWP-042Z-TFD-020	ZS33KAE	460-3	27.6	21	21.12	1/2 S	1-1/8 S	23.9	22.5	22.4				12.5	20	220
FFWP-050Z-CFV-020	ZS38K4E	200-1	27.5	21.7	21.1	1/2 S	1-1/8 S	23.9	22.5	22.4				39.8	70	220
FFWP-050Z-TFC-020	ZS38K4E	208/230-3	27.77	21	21.12	1/2 S	1-1/8 S	23.9	22.5	22.4				26.8	45	209
FFWP-050Z-TFD-020	ZS38K4E	460-3	27.77	21	21.12	1/2 S	1-1/8 S	23.9	22.5	22.4				12	20	209
FFWP-050Z-TFE-020	ZS38K4E	575-3	27.5	21.7	21.1	1/2 S	1-1/8 S	23.9	22.5	22.4				9.9	15	0

*Not all available models are listed. Please visit Climate.Emerson.com/OPI to see all available models.

F-LINE WATER COOLED CONDENSING UNITS

Copeland F-Line Water Cooled Condensing Units
Medium Temp & High Temp

Medium Temp to High Temp / Water Cooled														
HP	Model	Refrigerant	BTU/H at 105°Condensing, 75° Water Inlet - Evaporator Temp (°F), Capacities rated at 40°F return gas (65° return gas for capacities in **bold**), 5°F subcooling										Water Flow (GPM) At Evaporator Temp (°F)		
			0	5	10	15	20	25	30	35	40	45	0	25	45
1 1/2	FFWP-015Z	R-134a	4070	4620	5220	5870	6590	**7620**	**8500**	**9460**	**10500**	**11600**	0.6	1.0	1.4
		R-407A	6630	7410	8250	9170	10200	**12000**	**13300**	**14700**	**16300**	**18300**	0.9	1.4	2.1
		R-407C	5750	6670	7620	8630	9700	**11100**	**12300**	**13600**	**15000**	**16500**	0.8	1.4	2.0
		R-448A/449A	6150	6870	7670	8570	9580	**10900**	**12200**	**13700**	**15300**	**17200**	0.9	1.4	2.1
1 3/4	FFWP-017Z	R-134a	4850	5510	6230	7010	7870	**9090**	**10100**	**11300**	**12500**	**13900**	0.7	1.2	1.7
		R-407A	7920	8850	9850	11000	12200	**14300**	**15900**	**17600**	**19500**	**21800**	1.1	1.7	2.5
		R-407C	6870	7960	9100	10300	11600	**13300**	**14700**	**16300**	**18000**	**19700**	1.0	1.7	2.3
		R-448A/449A	7390	8250	9220	10300	11500	**13100**	**14700**	**16400**	**18400**	**20600**	1.0	1.7	2.5
2	FFWP-020Z	R-134a	5540	6290	7110	8010	8990	**10400**	**11600**	**12900**	**14300**	**15900**	0.8	1.3	1.9
		R-407A	9050	10100	11300	12500	13900	**16300**	**18100**	**20100**	**22200**	**24900**	1.2	2.0	2.8
		R-407C	7840	9090	10400	11800	13200	**15100**	**16800**	**18600**	**20500**	**22500**	1.1	1.9	2.7
		R-448A/449A	8420	9410	10500	11700	13100	**15000**	**16700**	**18800**	**21000**	**23500**	1.2	1.9	2.9
2 1/4	FFWP-022Z	R-134a	6680	7590	8570	9650	10800	**12500**	**14000**	**15600**	**17300**	**19100**	0.9	1.6	2.3
		R-407A	10900	12200	13600	15100	16700	**19700**	**21800**	**24200**	**26800**	**30000**	1.5	2.3	3.4
		R-407C	9450	11000	12500	14200	15900	**18300**	**20300**	**22400**	**24700**	**27200**	1.3	2.3	3.2
		R-448A/449A	10200	11400	12700	14200	15900	**18000**	**20200**	**22600**	**25300**	**28400**	1.4	2.3	3.4
3	FFWP-030Z	R-134a	7540	8560	9680	10900	12200	**14100**	**15800**	**17500**	**19500**	**21600**	1.1	1.8	2.5
		R-407A	12300	13700	15300	17000	18900	**22200**	**24600**	**27300**	**30200**	**33800**	1.7	2.6	3.8
		R-407C			14500	16400	18500	**20600**	**22800**	**25300**	**27800**	**30600**		2.6	3.6
		R-448A/449A	11600	13000	14500	16100	17900	**20300**	**22700**	**25400**	**28400**	**31900**	1.6	2.6	3.8
3 1/4	FFWP-032Z	R-134a	10100	11500	13000	14600	16400	**19000**	**21200**	**23600**	**26200**	**29000**	1.4	2.3	3.4
		R-407A	15600	17700	19900	22300	25000	**28600**	**31800**	**35300**	**39100**	**43200**	2.1	3.5	5.0
		R-407C	14300	16600	19000	21500	24200	**27700**	**30700**	**34000**	**37500**	**41200**	2.0	3.4	4.8
		R-448A/449A	16500	18700	20900	23400	26000	**29200**	**32300**	**35600**	**39100**	**42900**	2.2	3.7	5.2
4	FFWP-040Z	R-134a	11600	13200	14900	16800	18900	**21000**	**23500**	**26100**	**29000**	**32200**	1.5	2.6	3.8
		R-407A	17400	19600	22100	24800	27700	**32700**	**36400**	**40400**	**44700**	**49900**	2.4	3.9	5.6
		R-407C	16300	18900	21600	24500	27500	**30600**	**34000**	**37600**	**41500**	**45600**	2.2	3.8	5.3
		R-448A/449A	17600	19800	22200	24900	27900	**31500**	**35100**	**38900**	**43000**	**47400**	2.4	4.0	5.7
4 1/4	FFWP-042Z	R-134a	14000	15800	17900	20200	22600	**26100**	**29200**	**32500**	**36100**	**40000**	1.9	3.2	4.7
		R-407A	22800	25800	29000	32600	36400	**41700**	**46400**	**51500**	**57000**	**63500**	3.0	5.0	7.1
		R-407C	19700	22900	26200	29600	33300	**38100**	**42300**	**46800**	**51600**	**56800**	2.7	4.7	6.6
		R-448A/449A	23100	26100	29300	32700	36400	**40900**	**45200**	**49800**	**54500**	**60000**	3.1	5.1	7.2
5	FFWP-050Z	R-134a	16000	18100	20400	23000	25800	**30800**	**34300**	**38100**	**42300**	**47200**	2.1	3.8	5.7
		R-407A	25500	28900	32500	36400	40600						3.5		
		R-407C	26100	29600	33300	37300	41600	**44900**	**50500**	**56000**	**61500**	**67000**	3.5	5.3	7.8
		R-448A/449A	26800	30600	34800	39200	43900						3.6		

Water Cooled units are without accumulator

Low Temp

Low Temp / Water Cooled													
HP	Model	Refrigerant	BTU/H at 105°Condensing, 75° Water Inlet - Evaporator Temp (°F), Capacities rated at 40°F return gas, 5°F subcooling								Water Flow (GPM) At Evaporator Temp (°F)		
			-30	-25	-20	-15	-10	-5	0	5	-25	-10	5
1 1/2	FFWP-015Z	R-407A		3330	3960	4590	5240	5910	6630	7410	0.5	0.8	1.0
		R-448A/449A		3140	3720	4290	4880	5490	6150	6870	0.5	0.7	1.0
1 3/4	FFWP-017Z	R-407A		3980	4720	5480	6250	7060	7920	8850	0.6	0.9	1.2
		R-448A/449A		3810	4490	5170	5870	6600	7390	8250	0.6	0.9	1.1
2	FFWP-020Z	R-407A		4540	5390	6250	7140	8060	9050	10100	0.7	1.0	1.4
		R-448A/449A		4330	5110	5890	6690	7520	8420	9410	0.7	1.0	1.3
2 1/4	FFWP-022Z	R-407A		5470	6500	7540	8610	9720	10900	12200	0.8	1.2	1.6
		R-448A/449A		5180	6150	7100	8070	9090	10200	11400	0.8	1.2	1.6
3	FFWP-030Z	R-407A		6180	7340	8510	9710	11000	12300	13700	1.0	1.4	1.8
		R-448A/449A		4820	6320	7700	9010	10300	11600	13000	0.8	1.3	1.8
3 1/4	FFWP-032Z	R-407A		7160	8680	10300	11900	13700	15600	17700	1.2	1.7	2.4
		R-448A/449A		7700	9270	10900	12700	14500	16500	18700	1.2	1.8	2.5
4	FFWP-040Z	R-407A		7940	9640	11400	13300	15200	17400	19600	1.3	1.9	2.6
		R-448A/449A		10300	11300	12500	14000	15700	17600	19800	1.5	1.9	2.6
4 1/4	FFWP-042Z	R-407A		10400	12700	15000	17400	20000	22800	25800	1.7	2.4	3.4
		R-448A/449A		10800	13000	15300	17700	20400	23100	26100	1.7	2.5	3.4
5	FFWP-050Z	R-407A		13000	14900	17100	19600	22400	25500	28900	2.0	2.8	3.9
		R-448A/449A		13400	15200	17500	20200	23300	26800	30600	2.1	2.9	4.0

Superheat restrictions apply

Water Cooled units are without accumulator

X-LINE OUTDOOR CONDENSING UNITS

X-Line Outdoor Condensing Units

The Copeland Scroll™ Outdoor Condensing Unit (X-Line Series) for commercial refrigeration applications offers c-store operators the greatest energy efficiency, performance and flexibility available in a standard condensing unit.



Features & Benefits



- Copeland Scroll Compressor Variable Speed Fan Motor
- Advanced Diagnostics and Protection Features
- Factory Installed EK Filter Drier and HMI Moisture Indicator
- Slim Profile Design and Light Weight
- Reliability
- High Energy Efficiency
- Low Sound & Vibration
- Faster Troubleshooting Warranty Reduction
- Fewer Leaks, Reduced Callbacks, Lower Installation Costs, Increased Equipment Reliability, Lower Warranty
- Application Flexibility

For More Product Details, Specification And Pricing, Please Contact Your Local Branch.

C, D & E-LINE

C-LINE FEATURES:

- Large Receivers
- Fan Guard
- Bx Conduit
- Pressure Switch
- 3 Service Valves
- Receiver Mounted

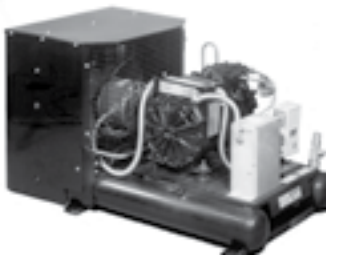

D & E-LINE FEATURES:

- Receiver
- Fan Guard
- Bx Conduit
- Pressure Switch
- 3 Service Valves





W-LINE

W-LINE FEATURES:

- 5 To 15% Improved Efficiency
- Ul Listed And Csa Approved
- Rigid Condenser / Receiver Base Assembly
- All Condensers Are Mechanically Or Chemically Cleanable
- Low Temperature Single Stage Refrigerant Cooled Units Available With Auxiliary Fan (Provided On -050 Models)
- Designed For Rack Installations
- Inherent, Internal Thermostat Or Solid State Motor Protection On All Models
- Large Pumpdown Capacity
- Exhaustible Fusible Plugs On All 3/4 Hp Through 10 Hp Models And Pressure Relief Valves On All 15 Hp Through 40 Hp Models
- Dual Pressure Control Mounted And Wired
- Water Valve Provided
- Wiring Enclosed In Metallic Conduit

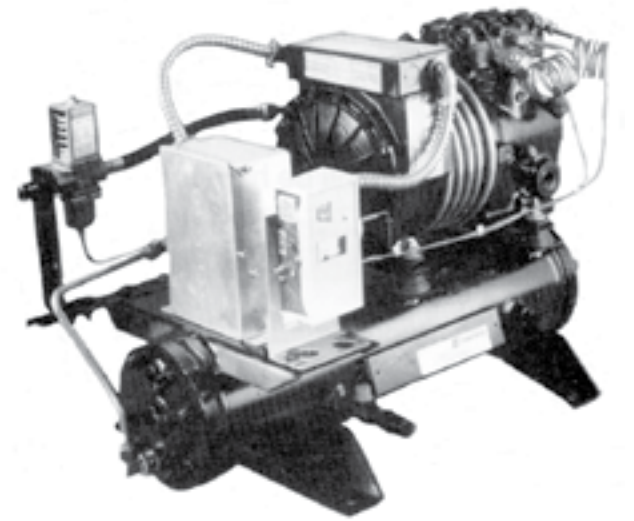

- Sentronic Oil Pressure
  - Eliminates Capillary Tube Problems
  - Electronic Sensing Of Oil Pressure
- Oil Pressure Safety Control Mounted On All Models 5 Hp And Above

For More Product Details, Specification And Pricing, Please Contact Your Local Branch.

WATER COOLED CONDENSING UNITS

SEMI-HERMETIC - W-LINE

High/Medium Temperature
3/4 H.P. to 3 H.P.

Capacity Data

Unit Model Number	Ref.	HP	Capacity (BTU/Hr) at 75° Inlet Water - Evaporator Temp (0°F)									LIST		
			-5°F	0°F	5°F	10°F	15°F	20°F	25°F	30°F	35°F	230/1	230/3	460/3
W2WM-0075	22	0.75	3680	4260	4880	5550	6290	7110	8040					
WJWM-0075	404A	0.75	3140	3670	4270	4940	5660	6450	7280					
W2WH-0075	22	0.75		3450	3980	4570	5230	5960	6750	7610	8550			
WTWH-0075	134a	0.75		3370	3910	4510	5160	5860	6620	7440	8330			
W3WM-0100	22	1		5730	6700	7750	8890	10100	11400					
WJWM-0100	404A	1	4890	5650	6410	7210	8090	9090	10260					
W2WH-0100	22	1		5050	5800	6640	7570	8590	9700	10900	12200			
WTWH-0100	134a	1		4140	4890	5700	6580	7540	8580	9730	11000			
WJWM-0152	404A	1.5	5860	6470	7650	8640	9740	11000	12400					
W2WH-0151	22	1.5		6390	7270	8310	9510	10900	12300	14000	15700			
WTWH-0151	134a	1.5		5960	7040	8210	9470	10900	12400	14000	15800			
W3WM-0201	22	2	7260	8690	10200	11700	13400	15100	17000					
WJWM-0202	404A	2	8440	9750	11000	12300	13800	15400	17400					
WJWM-0203	404A	2	10000	11600	13300	15100	17100	19200	21600					
WTWH-A201	134a	2		8360	9880	11500	13300	15200	17300	19700	22200			
												115/1	230/3	460/3
W2WH-0201	22	2		2960	5420	7890	10400	13000	15700	18600	21600			

Physical/Electrical Data

Unit Model Number	Comp Model	Overall Dimensions (in.)			Connecting Lines		Base Mounting Centers		Condenser Water		Min Circuit Ampacity/ Max Fuse Size"						Pump Down Cap. (lbs)	Ship Wt. (lbs.)
		L	W	H	Liquid Line (in.)	Suction Line (in.)	L	W	In	Out	230-1-60		230-3-60		460-3-60			
W2WM-0075	KWE2-0075	28.6	14.5	17.0	3/8 F	5/8 F	14	13	3/8 MPT	1/2 FPT	6.8	15	4	15			26	166
WJWM-0075	KWNB-007E	28.6	14.5	17.0	3/8 F	5/8 F	14	12	3/8 MPT	1/2 FPT	6.8	15	4	15			23	174
W2WH-0075	KWN2-0075	28.6	14.5	17.0	3/8 F	5/8 F	14	13	3/8 MPT	1/2 FPT	7.6	15	4	15			26	166
WTWH-0075	KWMB-007E	28.6	14.5	17.0	3/8 F	5/8 F	14	13	3/8 MPT	21/2 FPT	9	15	6	15			27	178
W3WM-0100	KWM2-0100	28.6	14.5	17.0	3/8 F	5/8 F	14	13	3/8 MPT	1/2 FPT	9.4	15	6	15	4	15	26	170
WJWM-0100	KWRB-010E	28.6	14.5	17.0	3/8 F	5/8 F	14	12	3/8 MPT	1/2 FPT			5	15			23	209
W2WH-0100	KWR2-0100	28.6	14.5	17.5	3/8 F	5/8 F	14	13	3/8 MPT	1/2 FPT	9.3	15	5	15	3	15	14	170
WTWH-0100	KWJA-011E	27.3	14.5	17.5	3/8 F	5/8 F	14	13	3/8 MPT	21/2 FPT	9	15	6	15			14	176
WJWM-0152	KWGB-010E	34.8	14.5	17.0	3/8 F	7/8 S	18	13	3/8 MPT	1/2 FPT			6	15			28	178
W2WH-0151	KWGB-0150	34.8	14.5	17.0	3/8 F	7/8 S	18	13	3/8 MPT	1/2 FPT	12	20	7	15	3	15	28	225
WTWH-0151	KWLB-015E	34.8	14.5	17.0	3/8 F	7/8 S	18	13	3/8 MPT	21/2 FPT	12	20	8	15			33	220
W3WM-0201	KWKB-0200	34.8	14.5	17.7	3/8 F	7/8 S	18	13	3/8 MPT	1/2 FPT	13.3	20	9	15	4	15	35	225
WJWM-0202	KWKB-021E	34.8	14.5	17.7	3/8 F	7/8 S	18	13	3/8 MPT	1/2 NPT			9	15			31	225
WJWM-0203	ERCA-021E	34.8	14.5	20.4	3/8 F	7/8 S	18	13	1/2 NPT	1/2 NPT			11	15	4	15	31	270
W2WH-0201	ERA2-0200	34.0	14.5	20.4	3/8 F	7/8 S	18	13	1/2 NPT	1/2 NPT	13	20	8	15	4	15	32	294
WTWH-A201	EAVB-021E	35.3	14.5	20.4	3/8 F	7/8 S	18	13	1/2 NPT	1/2 NPT	19	30	10	15	5	15	36	311

Performance Data at 105° Ambient – Subcooling 5°F; Return Gas Temp. 65°F; Cond. Water Inlet Temp. 85°F; Water Temp Difference 10°F

WATER COOLED CONDENSING UNITS

SEMI-HERMETIC - W-LINE

High/Medium Temperature
3 H.P. to 40 H.P.

Capacity Data

Unit Model Number	Ref.	HP	Capacity (BTU/Hr) at 75° Inlet Water - Evaporator Temp (0°F)									LIST		
			-5°F	0°F	5°F	10°F	15°F	20°F	25°F	30°F	35°F	230/1	230/3	460/3
WJWM-0300-TAC-001-CPD	404A	3	14800	17000	19400	22000	24800	27800	31200				$21,957.00	
W2WH-0300	22	3		14800	17100	19700	22400	25500	28800	32400	36200			
WTDH-0301	134a	3		19600	22700	26100	29700	33700	38100	42900	48100			
W3DD-0504	22	5		23100	27000	31300	35800	40800	46100	51900	58100			
WJDM-0502	404A	5	22500	25800	29500	33600	38100	43100	48500	0				
WTDH-0601	134a	6		24500	28300	32500	37100	42200	47700	53700	60400			
W3DD-0752	22	7.5	33000	39400	46100	53100	60400	68200	76500	85400	95000			
WJDM-0751	404A	7.5	41300	46600	52500	58900	66000	73700	82100					
WTDH-0751	134a	7.5		34600	40100	46100	52500	59600	67300	75800	85000			
W3DD-1003	22	10				75990	85930	96610	108090	120430	133700			
WJDM-1001	404A	10	58100	65600	73700	82600	92200	102800	114200					
W3DD-1502	22	15				102930	116170	130360	145600	161970	179560			
WJDM-1501	404A	15	79700	89800	100900	113100	126400	140900	156800					
W3DD-2002	22	20		84800	96500	109400	123700	139400	156600	175600	196400			
WJDM-2001	404A	20	80900	92200	104900	118800	133900	150200	167800					
W3DD-2502	22	25				142900	160200	178800	198900	220700	244500			
WJDM-2501	404A	25	106100	119600	135000	152200	171000	191300	212900					
W3DD-3002	22	30		129000	147100	167200	189200	213200	239100	266800	296300			
WJDM-3001	404A	30	125900	143000	161900	182600	205100	229600	256000					
W3DD-3502	22	35				209000	235300	263500	293900	326800	362500			
W3DD-4001	22	40		199200	225300	253700	284500	317900	353900	392600	434100			
WJDM-4000	404A	40	192000	216500	243300	272700	304500	339000	375900					

Physical/Electrical Data

Unit Model Number	Comp Model	Overall Dimensions (in.)			Connecting Lines		Base Mounting Centers		Condenser Water		Min Circuit Ampacity/ Max Fuse Size"						Pump Down Cap. (lbs)	Ship Wt. (lbs.)
		L	W	H	Liquid Line (in.)	Suction Line (in.)	L	W	In	Out	230-1-60		230-3-60		460-3-60			
WJWM-0300	ERFA-031E	30.0	17.0	24.0	1/2 F	1-18 S	18	16	1-1/4 FPT	1-1/4 FPT			16	25	7	15	35	326
W2WH-0300	ERF1-0310	30.0	17.0	24.0	1/2 F	1-1/8 S	18	16	1-1/4 FPT	1-1/4 FPT	21.3	35	15	25	8	15	41	330
WTDH-0301	2DF3F16KE	39.9	17.0	28.0	1/2 F	1-1/8 S	25	16	1-1/4 FPT	1-1/4 FPT			21	35	10	15	69	492
W3DD-0504	2DC3-0500	39.9	17.0	28.0	1/2 F	1-3/8 S	25	16	1-1/4 FPT	1-1/4 FPT					13	20	70	514
WJDM-0502	2DL3-050E	40.0	17.0	28.0	1/2 F	1-3/8 S	25	16	1-1/4 FPT	1-1/4 FPT			28	50	13	20	59	501
WTDH-0601	2DA3F23KE	39.9	17.0	28.0	1/2 F	1-3/8 S	25	16	1-1/4 FPT	1-14 FPT					13	20	69	511
W3DD-0752	2DA3R89K0	46.0	17.0	38.6	5/8 F	1-3/8 S	25	16	1-1/4 FPT	1-1/4 FPT			40	70	18	30	129	564
WJDM-0751	2DA3R89KE	46.0	17.0	38.6	5/8 F	1-3/8 S	25	16	1-1/4 FPT	1-1/4 FPT			40	70	18	30	112	590
WTDH-0751	3DB3F33KE	46.0	17.0	30.7	5/8 F	1-3/8 S	25	16	1-1/4 FPT	1-1/4 FPT					20	35	130	634
W3DD-1003	3DB3A1000	52.0	17.0	30.6	7/8 S	1-3/8 S	38	16	1-1/4 FPT	1-1/4 FPT			55	90	25	45	144	708
WJDM-1001	3DB3R12ME	52.0	17.0	30.6	7/8 S	1-3/8 S	38	16	1-1/4 FPT	1-1/4 FPT			55	90	25	45	125	670
W3DD-1502	3DS3R17M0	52.0	18.0	32.6	1-1/8 S	1-5/8 S	38	16	1-1/2 FPT	1-1/2 FPT			80	125	36	60	202	935
WJDM-1501	3DS3A150E	52.0	18.0	32.6	1-1/8 S	1-5/8 S	38	16	1-1/2 FPT	1-1/2 FPT			75	125	36	60	175	935
W3DD-2002	4DA3R18M0	64.0	20.2	34.3	1-1/8 S	1-5/8 S	38	16	2 FPT	2 FPT					41	70	258	1160
WJDM-2001	4DA3R18ME	64.0	20.1	34.2	1-1/8 S	1-5/8 S	38	16	2 FPT	2 FPT			83	125	41	70	224	1000
W3DD-2502	4DH3R22M0	64.5	20.5	34.3	1-1/8 S	1-5/8 S	38	16	2 FPT	2 FPT			103	175	51	90	247	1233
WJDM-2501	4DH3R22ME	64.5	20.5	34.3	1-1/8 S	1-5/8 S	38	16	2 FPT	2 FPT			103	175	51	90	214	1070
W3DD-3002	4DJ3R28M0	64.5	20.5	34.3	1-1/8 S	2-1/8 S	38	16	2 FPT	2 FPT			18	20	59	100	247	1160
WJDM-3001	4DJ3R28ME	64.5	20.5	34.3	1-1/8 S	2-1/8 S	38	16	2 FPT	2 FPT			118	200	59	100	214	1073
W3DD-3502	6DH3A3500	77.5	22.4	34.0	1-1/8 S	2-1/8 S	38	18	2-1/2 FPT	2-1/2 FPT					67	110	291	1357
W3DD-4001	6DJ3A4000	89.5	21.4	36.0	1-5/8 S	2-1/8 S	38	18	2-1/2 FPT	2-1/2 FPT					89	150	293	1522
WJDM-4000	6DJ3A400E	89.5	21.4	36.0	1-5/8 S	2/18 S	38	18	2-1/2 FPT	2-1/2 FPT			178	300	89	150	252	1150

Performance Data at 105° Ambient – Subcooling 5°F; Return Gas Temp. 65°F; Cond. Water Inlet Temp. 85°F; Water Temp Difference 10°F

WATER COOLED CONDENSING UNITS

W-LINE

Low Temperature
1 H.P. to 27 H.P.

Capacity Data

Unit Model Number	Ref.	HP	Capacity (BTU/Hr) at 75° Inlet Water - Evaporator Temp (0°F)									LIST		
			-40°F	-35°F	-30°F	-25°F	-20°F	-15°F	-10°F	-5°F	0°F	230/1	230/3	460/3
WJWL-0100-TAC-001-CPD	404A	1	2300	2800	3360	3980	4660	5420	6250	7170	8180		$13,501.00	
WJWL-0151-CAV-001-CPD	404A	2	3450	4200	5020	5920	6900	7960	9130	10410	11800		$12,192.00	
WJWL-A201-TAC-001-CPD	404A	2	4440	5460	6580	7810	9170	10700	12300	14100	16100		$19,128.00	
WJDL-0302-TFC-050-CPD	404A	3	9950	12100	14400	17000	19800	22900	26300	30100	34200			
WJDL-0401	404A	4	12360	14900	17660	20700	24020	27660	31640	36000	40760			
WJDL-0603	404A	6	18090	21350	24950	28920	33280	38060	43300	49020	55260			
WJDL-0751	404A	8	21470	25470	29750	34390	39440	44980	51090	57810	65240			
WJDL-0901	404A	9	26180	30920	36130	41850	48130	55040	62620	70920	80010			
WJDL-1001	404A	10	29850	35220	41090	47500	54480	62050	70250	79120	88680			
WJDL-1501	404A	15	41400	49300	57400	65800	74800	84400	94800	106600	119600			
WJDL-2201	404A	22	48100	57900	68100	78700	89900	101800	114700	128600	143600			
WJDL-2701	404A	27	59500	70700	83200	96900	121700	127800	145000	163400	183000			

Physical/Electrical Data

Unit Model Number	Comp Model	Overall Dimensions (in.)			Connecting Lines		Base Mounting Centers		Condenser Water		Min Circuit Ampacity/ Max Fuse Size"						Pump Down Cap. (lbs)	Ship Wt. (lbs.)
		L	W	H	Liquid Line (in.)	Suction Line (in.)	L	W	In	Out	230-1-60		230-3-60		460-3-60			
WJWL-0100	KWJA-0100E	27	15	18	3/8 F	5/8 F	14	13	3/8 MPT	1/2 FPT	8.6	15	6	15	3	15	12	177
WJWL-0151	KWLA-016E	35	15	17	3/8 F	7/8 S	18	13	3/8 MPT	1/2 FPT	12.4	20	8	15	4	15	28	218
WJWL-A201	EAVB-021E	35	15	20	3/8 F	7/8 S	18	13	1/2 NPT	1/2 NPT	19	30	10	15	5	15	31	314
WJDL-0302	2DF3F16KE	40	17	37	1/2 F	1-1/8 S	25	16	1-1/4 FPT	1-1/4 FPT	33.4	50	22	35	11	15	59	501
WJDL-0401	2DL3F20KE	40	17	37	1/2 F	1-3/8 S	25	16	1-1/4 FPT	1-1/4 FPT			34	50	14	20	59	513
WJDL-0603	3DA3A060E	46	17	39	5/8 F	1-3/8 S	25	16	1-1/4 FPT	1-1/4 FPT			39	60	18	30	112	651
WJDL-0751	3DB3F33KE	46	17	39	5/8 F	1-3/8 S	25	16	1-1/4 FPT	1-1/4 FPT			39	70	21	35	112	655
WJDL-0901	3DF3F40KE	52	17	39	7/8 S	1-3/8 S	38	16	1-1/4 FPT	1-1/4 FPT			50	80	22	35	125	500
WJDL-1001	3DS3A100E	52	17	39	7/8 S	1-3/8 S	38	16	1-14 FPT	1-1/4 FPT			53	90	24	40	125	743
WJDL-1501	4DL3A150E	52	19	38	1-1/8 S	1-5/8 S	38	16	1-1/2 FPT	1-1/2 FPT			67	110	34	50	153	865
WJDL-2201	4DT3F76KE	65	21	34	1-1/8 S	1-5/8 S	38	16	2 FPT	2 FPT			84	125	42	70	216	1123
WJDL-2701	6DL3A270E	65	22	43	1-1/8 S	2-1/8 S	38	16	2 FPT	2 FPT			102	175	51	90	216	1195

Performance Data at 105° Ambient – Subcooling 5°F; Return Gas Temp. 65°F; Cond. Water Inlet Temp. 85°F; Water Temp Difference 10°F

EMBRACO COMPRESSORS

R12 & R134A Refrigeration Compressors



Part #	Nominal HP	Volts	Application	LBP	HBP32	HBP46	LIST
EMI45ER1	1/8	115	LBP	485			$818.00
EMI55ER1	1/6	115	LBP	570			$1,008.00
FFC60BK	1/5+	115	L/M/HBP	756	2,790		$1,031.00
FF8.5HBK	1/4	115	L/M/HBP	850	3,080		$717.00
FF10BX1	1/4+	115	L/M/HBP - HST	915	3,200		$1,120.00
FF11.5BKW	1/3	115	L/M/HBP	1,130	4,000		
FFI12BKW	1/3+	115	L/M/HBP	1,350	4,600		$750.00
FFI12BX	1/3+	115	L/M/HBP - HST	1,350	5,000		$1,206.00
R134A							
EMIS30HHR1	1/10	115	L/M/HBP	340	1,480		$715.00
EMI45HER	1/8	115	LBP	420			$879.00
EM45HHR	1/8	115	L/M/HBP	420	1,775		$947.00
EMI55HER	1/6	115	LBP	510			$962.00
EMIS70HHR1	1/5	115	HBP		2,600		$1,120.00
FF7.5HBK	1/5+	115	L/M/HBP	630	2,760		$1,077.00
NEK6160Z1	1/4	115	HBP			2,884	$1,292.00
FF8.5HBK	1/4	115	L/M/HBP	740	3,135		$717.00
NE2121Z1	1/4	115	LBP	950			$1,335.00
NEK6170Z1	1/4	115	HBP			3,340	$1,292.00
FF10HBX	1/4+	115	L/M/HBP - HST	840	3,650		$748.00
NEK6187Z1	1/3+	115	HBP			3,830	$1,292.00
FFI12HBX	1/3+	115	L/M/HBP - HST	1,190	5,300		$802.00
NEK6210Z1	1/2	115	HBP			5,178	$1,335.00
NT6215Z1	1/2+	115	HBP		6,626	6,880	$1,568.00
NT6217Z1	3/4+	115	HBP		7,460	7,564	$1,663.00
NT6217Z2	3/4+	208-230	HBP		7,579	7,564	$1,538.00
NJ6220Z1	1	115	HBP			10,169	$1,919.00
NJ6220Z2	1	208-230	HBP			10,169	$1,919.00
NJ6226Z2	1 1/4	208-230	HBP			11,130	$1,978.00



Sound Blankets

Part #	Description	LIST
SBUHD	Universal fit for all compressors up to 42,000BTU. Fits all scroll and reciprocating compressors.	$168.00
SBLHD	For large reciprocating compressors 42,000-150,000BTU. Fits Bristol H, Carlyle P/W, Copleand BR/CR/CT and Tecumseh AG/RK/SF	$183.80
SBRHD	Just for reciprocating compressors from 5,000 to 42,000BTU. Fits Bristol H, Carlyle J, Copeland CR/CT/CV/JR/RE/RR, Tecumseh AB/AE/AH/AJ/AK/AV/AW and Toshiba TH	$147.30
SBSHD	Just for scroll compressors including; Carlyle SC/SR and Hitachi. (for Copeland ZR scroll compressors use #SBUHD)	$136.60

EMBRACO COMPRESSORS

R22 & R404A - Refrigeration Compressors



Part #	Nominal HP	Volts	Application	LBP	HBP32	HBP46	LIST
R22							
NE6210E1	1/2	115	HBP			4,640	
NE9213E1	3/4	115	M/HBP			6,543	$894.00
NE9213E2	3/4	208-230	M/HBP			6,543	$1,477.00
T6217E1	3/4+	115	HBP			7,546	$1,553.00
T6217E2	3/4+	208-230	HBP			7,546	$1,552.00
T6220E1	1	115V	HBP			9,068	
T6220E2	1	208-230	HBP			9.068	
T7223G1	1	115	HBP		11,000		$3,350.00
NJ7238E2	1 1/2	208-230	HBP			17,676	$3,445.00
R404A							
NEK2125GK1	1/3+	115	LBP	1,458			$1,477.00
NEK6181GK1	1/3+	115	MBP			4,389	$939.00
NEK2134GK1	1/2	115	LBP	1,948			$1,395.00
NEK6210GK1	1/2	115	MBP			5,355	$1,086.00
NEK6210GK2	1/2	208-230	MBP			5,030	
NEK2150GK1	1/2+	115	LBP	2,493			
NT2168GKV1	3/4	115	LBP	3,008			
NT2168GKV2	3/4	208-230	LBP	3,008			
NT6217GKV1	3/4	115	MBP			7,356	$1,746.00
NT2180GKV1	1	115	LBP	3,892			$1,996.00
NT2180GKV2	1	208-230	LBP	3,892			$1,948.00
NT6220GKV1	1	115	MBP			8,367	$2,756.00
NT6220GKV2	1	208-230	MBP			9253	$2,756.00
NT6222GKV1	1	115	MBP			11,276	$2,756.00
NT6222GKV2	1	208-230	MBP			10,184	$2,756.00
NJ9226GK2	1	208-230	MBP			12,653	$2,756.00
NJ2192GK1	1 1/4	115	LBP	4,500			$1,919.00
NJ2192GK2	1 1/4	208-230	LBP	4,500			
NJ9232GK2	1 1/4	208-230	MBP			16,053	
NJ2212GK1	1 1/2	115	LBP	5,444			$3,359.00
NJ2212GJ2	1 1/2	208-230	LBP	5,710			$3,445.00

Checkpoint Temp (F)

Temperature	LBP	HBP32	HBP46
EVAP	-10	45	45
COND	130	130	130
LIQ	90	90	115
AMB	90	90	95
SUCT	90	90	95

REFRIGERATION DUTY COMPRESSORS

COPELAND

Copeland A, R to New Model Cross Reference Guide

			Standard Application Rating Point (BTU/hr)				
Old Compressor	**Current compressor**	**Refrigerant**	**-25F SST / 105F SCT**	**20F SST / 105F SCT**	**20F SST / 120F SCT**	**45F SST / 105F SCT**	**45F SST / 130F SCT**
AFT22C1E-IAA	RFT22C1E-IAA	R404A	1555				
AFT26C1E-CFA	RFT26C1E-CAA	R404A	2040				
AFT26C1E-CFV	RFT26C1E-CAV	R404A	2040				
ARB21C3-IAA	ASE12C4-IAA	R22					2300
ARE36C3-IAA	ASE19C4-IAA	R22					3210
ART62C1E-IAA	RRT62C1E-IAA	R134A			3350		
ART62C1E-IAA	RRT62C1E-IAA	R134A					5790
ART62C1E-IAV	RRT62C1E-IAV	R134A					5700
ART64C1E-IAA	RRT64C1E-IAA	R134A				8340	
ART64C1E-IAA	RRT64C1E-IAA	R134A					6830
ART64C1E-IAV	RRT64C1E-IAV	R134A				8340	
ART64C1E-IAV	RRT64C1E-IAV	R134A					6830
ART69C1-IAA	RST40C1-IAA	R22					6090
ART69C1-IAV	RST40C1-IAV	R22					6090
RF18C2E-IAA	RFT18C1E-PFA	R134A			4920		
RF18C2E-IAA	RFT18C1E-PFA	R134A	1325				
RF42C1E-CAV	RFT42C1E-PFV	R404A	3290				
RF42C1E-CAV	RST80C1E-PFV	R404A	3050				
RR10K1E-CAV	RRT10K1E-PFV	R134A					10600
RR10K2E-CAA	RRT10K1E-PFA	R134A					10600
RR81C1E-IAA	RRT81C1E-PFA	R134A			5460		
RR81C1E-IAA	RRT81C1E-PFA	R134A					9310
RR81C1E-IAV	RRT81C1E-PFV	R134A			5460		
RR81C1E-IAV	RRT81C1E-PFV	R134A					9310
RR81C2E-IAA	RRT81C1E-PFA	R134A				11050	
RR81C2E-IAV	RRT81C1E-PFV	R134A				11050	
RR81C2E-IAV	RRT81C1E-PFV	R134A					9430
RRG4-0100-PAV	RST64C1-CAV	R22					11400
RS40C1E-IAA	RRT64C1E-IAA	R134A			4360		
RS43C1E-IAA	RST45C1E-IAA	R404A			4350		
RS43C1E-IAV	RST45C1E-IAV	R404A			4350		
RS43C2E-CAA	RST45C1E-CAA	R404A			4350		
RS43C2E-IAA	RST45C1E-IAA	R404A		5270			
RS43C2E-IAA	RST45C1E-IAA	R404A			4350		
RS43C2E-IAV	RST45C1E-IAV	R404A		5410			
RS43C2E-IAV	RST45C1E-IAV	R404A			4350		
RS47C2-IAA	RST55C1-CAA	R22				11000	
RS47C2-IAA	RST55C1-CAA	R22					9020
RS47C2-IAV	RST55C1-CAV	R22				11000	
RS47C2-IAV	RST55C1-CAV	R22					9020
RS54C2E-IAA	RRT10K1E-PFA	R134A		7590			
RS54C2E-IAA	RRT10K1E-PFA	R134A			6710		
RS54C2E-IAV	RRT10K1E-PFV	R134A		7590			
RS55C1E-PAA	RST55C1E-CAA	R404A			5460		
RS55C1E-PAV	RST55C1E-CAV	R404A			5460		
RS55C2E-CAA	RST55C1E-CAA	R404A		6580			
RS55C2E-CAA	RST55C1E-CAA	R404A			5460		
RS55C2E-CAV	RST55C1E-CAV	R404A		6580			
RS55C2E-CAV	RST55C1E-CAV	R404A			5460		
RS64C1E-CAA	RST64C1E-CFA	R404A			7010		
RS64C1E-CAV	RST64C1E-CAV	R404A			7210		
RS64C1E-CAV	RST64C1E-CAV	R404A	2470				
RS64C1E-IAV	RST64C1E-IAV	R404A			7010		
RS64C2E-CAA	RST64C1E-CFA	R404A	2470				
RS64C2E-CAV	RST64C1E-CAV	R404A		8530			
RS64C2E-CAV	RST64C1E-CAV	R404A			7010		
RS64C2E-IAV	RST64C1E-IAV	R404A			7010		
RS64C2E-IAV	RST64C1E-IAV	R404A	2470				
RS70C1E-PFV	RST70C1E-PFV	R404A		8740			
RS70C1E-PFV	RST70C1E-PFV	R404A			7500		
RS70C1E-TFC	RST70C1E-TA5	R404A		8740			
RS70C1E-TFC	RST70C1E-TA5	R404A			7500		
RS70C1-PFV	RST70C1-PFV	R22			7500		
RS70C1-PFV	RST70C1-PFV	R22					11700
RS70C1-TFC	RST70C1-TA5	R22			6980		
RS70C1-TFC	RST70C1-TA5	R22					11700
RS80C2E-CAV	RST80C1E-PFV	R404A		10300			
RS80C2E-CAV	RST80C1E-PFV	R404A			8580		
RS80C2E-CAV	RST80C1E-PFV	R404A	3080				
RS80C2E-TF5	RST80C1E-TA5	R404A			8580		
RS80C2E-TF5	RST80C1E-TA5	R404A	3080				
RS97C1E-CAV	RST97C1E-PFV	R404A			9940		
RS97C1E-CAV	RST97C1E-PFV	R404A	3580				
RS97C2E-CAV	RST97C1E-PFV	R404A			9940		

REFRIGERATION DUTY COMPRESSORS

SYSTEM PRO - R-22

Copeland Compressor RST R448/R449

A



R



1/5 H.P. to 2 H.P.

Standard Model	CFH	Volts / Phase	Conditions (°F): Evap/Cond/Return Gas/Liquid/Ambient			Start Capacitor #(014-)	Run Capacitor #(014-)	Relay Part # (040-)
			BTUH	Watts	Amps			
R-22 HIGH TEMP			**20 / 120 / 65 / 120 / 95°F**					
ASE20C4-IAA		115-1	2090	407	5.2			
ASE26C4-1AA		115-1	2600	500	6.2			
ASE35C4-CAA		115-1	933	933	9.6	014-0072-02	014-0064-12	
ASE35C4-1AV		208-230	5770	749	2.70			

*** ROHS - Upgraded Parts**

Dimensional Summary

Unit Model Number	Cyl.	Overall Dimensions (in.)			Mounting Dimensions (in.)		Service Connections (in.)		Ship Weight (lbs)
		Length	Width	Height	Length	Width	Disch.	Suct.	
ARB21C3-IAA	1	10.50	6.00	7.60	6.50	4.00	1/4	5/16	24
ARE36C3-IAA	1	10.50	6.00	8.10	6.50	4.00	1/4	5/16	26
ARE36C3-SAA	1	10.50	6.00	8.10	6.50	4.00	1/4	5/16	26
ARE43C3-IAA	1	10.50	6.00	8.10	6.50	4.00	1/4	5/16	27
ARE59C3-CAA	1	10.50	6.00	8.60	6.50	4.00	1/4	5/16	25
ARE59C3-CAV	1	10.50	6.00	8.60	8.00	4.00	1/4	5/16	25
ART69C1-IAA	1	9.56	6.63	8.57	8.00	4.81	1/4	3/8	43
ART69C1-IAV	1	9.56	6.63	8.57	8.00	4.81	1/4	3/8	43
ART82C1-CAA	1	9.56	6.63	8.75	8.00	4.81	1/4	3/8	43
ART82C1-CAV	1	9.56	6.63	8.75	8.00	4.81	1/4	3/8	43
RSE4-0075-IAA	1	9.38	6.63	11.13	8.00	4.81	1/4	3/8	51
RSE4-0075-IAV	1	9.38	6.63	11.13	8.00	4.81	1/4	3/8	51
ART97C1-PAA	1	9.80	6.70	8.70	8.00	4.80	1/4	3/8	43
ART97C1-PAV	1	9.80	6.70	8.70	8.00	4.80	1/4	3/8	43
RRG4-0100-PAA	1	9.38	6.63	11.13	8.00	4.81	1/4	3/8	51
RRG4-0100-PAV	1	9.38	6.63	11.13	8.00	4.81	1/4	3/8	51
RS70C1-PFV	1	9.38	6.63	10.75	8.00	4.81	3/8	1/2	51
RS70C1-TFC	1	9.38	6.63	10.75	8.00	4.81	3/8	1/2	51
RR14K1-PFV	1	9.38	6.63	11.13	8.00	4.81	3/8	1/2	49
RR17K1-PFV	1	9.38	6.63	11.13	8.00	4.81	3/8	1/2	46
RR17K1-TFC	1	9.38	6.63	11.13	8.00	4.81	3/8	1/2	46

REFRIGERATION DUTY COMPRESSORS

SYSTEM PRO - R-134a



C

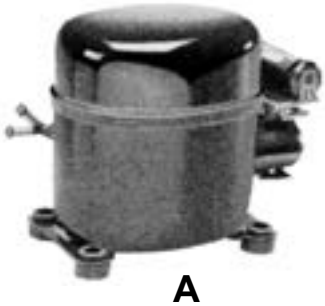

A



R

1/6 H.P. to 3 H.P.

Standard Model	CFH	Volts / Phase	Conditions (°F): Evap/Cond/Return Gas/Liquid/Ambient			Start Capacitor #(014-)	Run Capacitor #(014-)	Relay Part # (040
			BTUH	Watts	Amps			
R-134a HIGH TEMP			**45 / 130 / 65 / 130 / 95°F**					
ARE13C4E-1AA		115-1	1300	246	3.8			
ARE17C4E-1AA		115-1	1700	293	3.95			
ARE25C5E-1AA		115-1	2500	353	6.9			
ARE29C4E-1AA		115-1	1565-2940					
ARE34C4E-1AA		115-1	3400	500	6.2			
ARE35C5E-1AA		115-1	2140-3590	632-701	5.5-6.1			
ARE42C5E-IAA		115-1	4200	621	6.70			
ARE51C4E-CAA		115-1	2780-5290	865	7.1-8.8			
ARE51C4E-IAV		208-230/1	4940					
ARE54C5E-IAA		115-1	2930-5540					
R-134a MED TEMP			**20 / 120 / 40 / 120 / 95°F**					
RS40C1E-IAA	162	115-1	3990	836	10.6	0061-17 *		0001-6
RS40C1E-IAV	162	208/230-1	3990	836	5.3	0061-12 *		0088-0
RS54C1E-IAA	244	115-1	5400	1070	14.0	0061-22 *		0001-6
RS54C1E-IAV	244	208/230-1	5400	1070	7.0	0008-72		0166-19
R-134a EXT. MED TEMP			**20 / 120 / 40 / 120 / 95°F**					
AFE07C3E-IAA	69	115-1	710	250	4.2	0053-26 *		0167-01
AFE10C3E-IAA	90	115-1	940	300	4.9	0053-18 *		0150-1
AFT12C1E-IAA	140	115-1	1240	450	5.3	0053-21 *		0167-17
RF18C1E-IAA	201	115-1	1870	597	10.3	0061-22 *		0001-6
RF18C1E-IAV	201	208/230-1	1870	597	5.2	0008-72		0001-6

*** ROHS - Upgraded Parts**

REFRIGERATION DUTY COMPRESSORS
SYSTEM PRO - R-134a



C

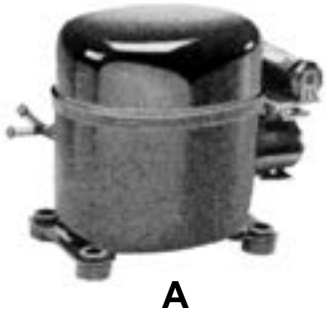

A



R

Dimensional Summary

Unit Model Number	Cyl.	Overall Dimensions (in.)			Mounting Dimensions (in.)		Service Connections (in.)		Ship Weight (lbs)
		Length	Width	Height	Length	Width	Disch.	Suct.	
ARB13C3E-IAA	1	10.50	6.00	7.00	6.50	4.00	1/4	5/16	23
ARB13C3E-SAA	1	10.50	6.00	7.00	6.50	4.00	1/4	5/16	23
ARB17C3E-IAA	1	10.50	6.00	7.60	6.50	4.00	1/4	5/16	22
ARB17C3E-SAA	1	10.50	6.00	7.60	6.50	4.00	1/4	5/16	22
ARE25C3E-IAA	1	10.50	6.00	7.60	6.50	4.00	1/4	5/16	26
ARE25C3E-SAA	1	10.50	6.00	7.60	6.50	4.00	1/4	5/16	26
ARE27C3E-IAA	1	10.50	6.00	7.60	6.50	4.00	1/4	5/16	22
ARE27C3E-SAA	1	10.50	6.00	7.60	6.50	4.00	1/4	5/16	22
ARE37C3E-IAA	1	10.50	6.00	8.10	6.50	4.00	1/4	5/16	32
ARE37C3E-IAV	1	10.50	6.00	8.10	6.50	4.00	1/4	5/16	32
ARE37C3E-SAA	1	10.50	6.00	8.10	6.50	4.00	1/4	5/16	32
ARE41C3E-IAA	1	10.50	6.00	8.60	6.50	4.00	1/4	5/16	30
ART51C1E-IAA	1	11.40	6.50	7.90	8.00	4.80	1/4	3/8	30
ART51C1E-IAV	1	11.40	6.50	7.90	8.00	4.80	1/4	3/8	30
ART62C1E-IAA	1	11.40	6.50	8.70	8.00	4.80	1/4	3/8	31
ART62C1E-IAV	1	11.40	6.50	8.70	8.00	4.80	1/4	3/8	31
ART64C1E-IAA	1	11.40	6.50	8.70	8.00	4.80	1/4	3/8	37
ART64C1E-IAV	1	11.40	6.50	8.70	8.00	4.80	1/4	3/8	37
RR81C1E-IAA	1	10.75	6.63	11.25	8.00	4.81	3/8	1/2	51
RR81C1E-IAV	1	10.75	6.63	11.25	8.00	4.81	3/8	1/2	51
RR10K1E-CAV	1	10.75	6.63	11.25	8.00	4.81	3/8	1/2	51
CS27K3E-PFV	2	9.44	9.28	15.06	7.50	7.50	1/2	3/4	72
CS27K3E-TF5	2	9.44	9.28	15.06	7.50	7.50	1/2	3/4	72
CS27K3E-TFD	2	9.44	9.28	15.06	7.50	7.50	1/2	3/4	72
CS33K3E-PFV	2	9.44	9.28	15.31	7.50	7.50	1/2	7/8	76
CS33K3E-TF5	2	9.44	9.28	15.31	7.50	7.50	1/2	7/8	76
CS33K3E-TFD	2	9.44	9.28	15.31	7.50	7.50	1/2	7/8	76
RS40C1E-IAA	1	10.75	6.63	11.25	8.00	4.81	3/8	1/2	51
RS40C1E-IAV	1	10.75	6.63	11.25	8.00	4.81	3/8	1/2	51
RS54C1E-IAA	1	10.75	6.63	10.75	8.00	4.81	3/8	1/2	51
RS54C1E-IAV	1	10.75	6.63	10.75	8.00	4.81	3/8	1/2	51
AFB04C3E-SAA	1	10.50	6.00	7.00	6.50	4.00	1/4	5/16	28
AFB05C3E-IAA	1	10.50	6.00	7.60	6.50	4.00	1/4	5/16	27
AFB05C3E-SAA	1	10.50	6.00	7.60	6.50	4.00	1/4	5/16	27
AFE07C3E-IAA	1	10.50	6.00	8.10	6.50	4.00	1/4	5/16	24
AFE10C3E-IAA	1	10.50	6.00	8.10	6.50	4.00	1/4	5/16	26
AFT12C1E-IAA	1	11.40	6.70	7.90	8.00	4.80	1/4	3/8	29
RF18C1E-IAA	1	10.75	6.63	10.75	8.00	4.81	3/8	1/2	52
RF18C1E-IAV	1	10.75	6.63	10.75	8.00	4.81	3/8	1/2	52

REFRIGERATION DUTY COMPRESSORS

SYSTEM PRO - R-404A



A



R

1/5 H.P. to 1-1/4 H.P.

Standard Model	CFH	Volts / Phase	Conditions (°F): Evap/Cond/Return Gas/Liquid/Ambient			Start Capacitor #(014-)	Run Capacitor #(014-)	Relay Part # (040-)
			BTUH	Watts	Amps			
R-404A MED TEMP			**20 / 120 / 40 / 120 / 95°F**					
ASE12C4E-IAA		115-1	864-2180					
ASE14C4E-IAA		115-1	1355		4.15			
ASE24C5E-IAA		115-1	1700-2340	609-644	5.3-5.6			
ASE24C5E-IAI		208/230-1						
ASE26C4E-IAA		115-1	585		6.80	0053-35		
ASE28C5E-IAV		208/230-1	1960-2770		3.5-3.9			
ASE32C5E-CAA		115-1	3200	552-690	4.8-6			
ASE32C5E-CAV		208/230-1	2200-3550	529-644	2.3-2.8			
ASE35C4E-IAV		208/230-1						
ASE39C5E-CAV		115-1						
ASE39C5E-IAA		115-1	3900					
R-404A EXT. MED TEMP			**20 / 120 / 40 / 120 / 95°F**					
AFE11C4E-IAA		115-1	1100	310	4.2			
AFE13C5E-1AA								
RST45C1E		115-1	4500		10.1			
RST55C1E		208-230-1	5500	1025	4.8			
RST64C1E		208-230-1	6400	1360	6.5			
RST55C1E		208-230-1	5500	1025	4.8			
RST64C1E		208-230-1	6400	1360	6.5			
RST70C1E		208-230-1	7000	1300	6.5			
RST80C1E		208-230-1	8250					
RST97C1E		208-230-1	9700	1590	7.3			
RST45C1E		115-1	4500	890	10.1			
RST55C1E		208-230-1	5500	1025	4.8			
RST64C1E		208-230-1	6400	1360	6.5			
RST80C1E		208-230-1	8000					
RST37C1U		115-1	3620					
RST44C1U		115-1	4530	728	12.5			
RST53C1U		115-1	5270		13.6			
RST58C1U		208-230-1						

REFRIGERATION DUTY COMPRESSORS

SYSTEM PRO - R-404A



A

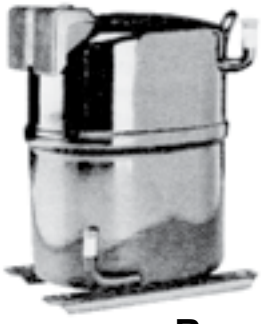

R

Dimensional Summary

Unit Model Number	Cyl.	Overall Dimensions (in.)			Mounting Dimensions (in.)		Service Connections (in.)		Ship Weight (lbs)
		Length	Width	Height	Length	Width	Disch.	Suct.	
ASB12C3E-IAA	1	10.50	6.00	7.60	6.50	4.00	1/4	5/16	25
ASB14C3E-IAA	1	10.50	6.00	7.60	6.50	4.00	1/4	5/16	43
ASE19C3E-IAA	1	10.50	6.00	7.60	6.50	4.00	1/4	5/16	26
ASE24C3E-IAA	1	10.50	6.00	8.10	6.50	4.00	1/4	5/16	27
ASE24C3E-IAV	1	10.50	6.00	8.10	6.50	4.00	1/4	5/16	27
ASE32C3E-CAA	1	9.40	6.00	8.60	6.50	4.00	1/4	5/16	25
ASE32C3E-CAV	1	9.40	6.00	8.60	6.50	4.00	1/4	5/16	25
AST40C1E-IAA	1	9.60	6.30	7.60	8.00	4.80	1/4	3/8	32
AST40C1E-IAV	1	9.60	6.30	7.60	8.00	4.80	1/4	3/8	32
AST45C1E-CAV									
AST45C1E-IAA									
AST54C1E-CAV	1	9.60	6.30	7.60	8.00	4.80	1/4	3/8	36
AST54C1E-CAA	1	9.60	6.30	7.60	8.00	4.80	1/4	3/8	36
AFE11C3E-IAA	1	10.50	6.00	8.10	6.50	4.00	1/4	5/16	25
AFE13C3E-IAA	1	10.50	6.00	8.60	6.50	4.00	1/4	5/16	28
AFT18C1E-IAA	1	11.40	6.70	8.70	8.00	4.80	1/4	3/8	33
RS43C1E-CAA	1	10.75	6.63	11.25	8.00	4.81	3/8	1/2	51
RS43C1E-CAV	1	10.75	6.63	11.25	8.00	4.81	3/8	1/2	51
RS43C1E-IAA	1	10.75	6.63	11.25	8.00	4.81	3/8	1/2	51
RS43C1E-IAV	1	10.75	6.63	11.25	8.00	4.81	3/8	1/2	51
AFT22C1E-CFV	1	11.40	6.70	8.70	8.00	4.80	1/4	3/8	33
AFT22C1E-IAA	1	11.40	6.70	8.70	8.00	4.80	1/4	3/8	33
RS55C2E-CAA	1	10.75	6.63	10.75	8.00	4.81	3-3/4	1/2	54
AFT26C1E-CFA	1	11.40	6.70	8.70	8.00	4.80	1/4	3/8	36
AFT26C1E-CFV	1	11.40	6.70	8.70	8.00	4.80	1/4	3/8	36
RS55C1E-CAV	1	10.75	6.63	11.25	8.00	4.81	3/8	1/2	51
RS55C1E-PAV	1	10.75	6.63	11.25	8.00	4.81	3/8	1/2	51
RS64C1E-CAA	1	10.75	6.63	11.25	8.00	4.81	3/8	1/2	51
RS64C1E-CAV	1	10.75	6.63	11.25	8.00	4.81	3/8	1/2	51
RS64C1E-IAA	1	10.75	6.63	11.25	8.00	4.81	3/8	1/2	51
RS64C1E-IAV	1	10.75	6.63	11.25	8.00	4.81	3/8	1/2	51
RS64C1E-PAA	1	10.75	6.63	11.25	8.00	4.81	3/8	1/2	51
AFT29C1E-CFA	1	11.40	6.70	8.70	8.00	4.80	1/4	3/8	36
AFT29C1E-CFV	1	11.40	6.70	8.70	8.00	4.80	1/4	3/8	36
RS70C1E-PFV	1	9.38	6.63	10.75	8.00	4.81	1/3	1/2	51
RS70C1E-TFC	1	9.38	6.63	10.75	8.00	4.81	1/3	1/2	51
RS80C1E-CAA	1	10.75	6.63	10.75	8.00	4.81	3/8	1/2	31
RS80C1E-CAV	1	10.75	6.63	10.75	8.00	4.81	3/8	1/2	51
RS80C1E-TF5	1	10.72	6.63	10.75	8.00	4.81	3/8	1/2	51
RS86C1E-PFJ	1	9.38	6.63	11.38	8.00	4.81	1/3	1/2	52
RS86C1E-PFV	1	9.38	6.63	11.38	8.00	4.81	1/3	1/2	52
RS97C1E-CAV	1	10.75	6.63	11.25	8.00	4.81	3/8	1/2	52
RS97C1E-TFC	1	10.75	6.63	11.25	8.00	4.81	3/8	1/2	52

REFRIGERATION DUTY COMPRESSORS

R404A



CF Low Temperature

Model	Volts / Phase	BTUH @ 110° Cond. -20° Evap	Replacement Parts		
			Start Capacitor MFD/Volts	Run Capacitor MFD/Volts	Relay Part # (040-)
CF04K6E-PFV-945^	208/230-1	3150	014-0061-04 * (145-174/220V)	014-0064-06 * (30/370V)	040-0166-15
CF04K6E-TF5-945	208/230-3	3150			
CF06K6E-PFV-945^	208/230-1	5460	014-0061-04 * (145-174/220V)	014-0064-06 * (30/370V)	040-0166-15
CF06K6E-TF5-945	208/230-3	5460			
CF09K6E-PFV-945^	208/230-1	8000	014-0036-20 * (145-174/250V)	014-0064-08 * (40/370V)	040-0166-15
CF09K6E-TF5-945	208/230-3	8000			
CF12K6E-PFV-945^	208/230-1	10700	014-0006-13 * (189-227/330V)	014-0064-14 * (40/370V)	040-0166-19
CF12K6E-TF5-945	208/230-3	10700			

^ Includes Capacitator & Relay Assembly *** ROHS - Upgraded Parts**

Dimensional Summary

Unit Model Number	Overall Dimensions (in.)			Mounting Dimensions (in.)			Tubing Orientation		
	Length	Width	Height	Length	Width	Wgt	Disch.	Suct.	Proc.
CF04K6E-PFV	10-9/32	9-3/32	TBD	7-1/2	7-1/2	TBD	3/8 EU	3/4 ST	3/8 EU
CF04K6E-TF5	10-9/32	9-3/32	TBD	7-1/2	7-1/2	TBD	3/8 EU	3/4 ST	3/8 EU
CF06K6E-PFV	10-9/32	9-3/32	13-5/16	7-1/2	7-1/2	76	3/8 EU	3/4 ST	3/8 EU
CF06K6E-TF5	10-9/32	9-3/32	13-5/16	7-1/2	7-1/2	76	3/8 EU	3/4 ST	3/8 EU
CF09K6E-PFV	10-9/32	9-3/32	13-13/16	7-1/2	7-1/2	78	1/2 EU	3/4 ST	3/8 EU
CF09K6E-TF5	10-9/32	9-3/32	13-13/16	7-1/2	7-1/2	78	1/2 EU	3/4 ST	3/8 EU
CF12K6E-PFV	10-9/32	9-3/32	TBD	7-1/2	7-1/2	TBD	TBD	TBD	TBD
CF12K6E-TF5	10-9/32	9-3/32	TBD	7-1/2	7-1/2	TBD	TBD	TBD	TBD

Copeland / Tecumseh Cross Reference

Model	Volts /Phase	RLA	BTUH	Amps
CF06K6E-PFV	**208/230-1**	**11.4**	**6690**	**8.0**
AHA2465ZXB	*230-1*	*10.7*	*6580*	*10.7*
AWA2460ZXD	*208/230-1*		*6300*	*8.2*
CF06K6E-PFV	**200/230-3**	**7.0**	**6360**	**5.3**
AHA2465ZXB	*208/230-3*	*6.0*	*6450*	*6.0*
AWA2460ZXD	*200/230-3*		*6000*	*5.6*
CF06K6E-PFV	**208/230-1**	**16.7**	**9800**	**11.2**
AHA2465ZXB	*208/230-1*	*14.2*	*9400*	*14.2*
AWA2460ZXD	*208/230-1*		*9500*	*11.4*
CF06K6E-PFV	**200/230-3**	**10.2**	**9620**	**7.6**
AHA2465ZXB	*208/230-3*	*8.1*	*9100*	*8.1*
AWA2460ZXD	*200/230-3*		*9100*	*7.4*

Rating Conditions (F): -10 Evap/120 Cond/40 Return Gas/120 Liquid/95 Ambient RLA = Rated Load Amps

CF Model Cross Reference Guide

Obsolete Model		Current Model	
Model	Description	Model	Description
CF04K6E-PFV-970		CF04K6E-PFV-945	Includes Capacitor & Relay Assembly
CF04K6E-PFV-979	Includes Capacitor & Relay Assembly		
CF04K6E-TF5-970		CF04K6E-TF5-945	
CF06K6E-PFV-970		CF06K6E-PFV-945	Includes Capacitor & Relay Assembly
CF06K6E-PFV-979	Includes Capacitor & Relay Assembly		
CF06K6E-TF5-970		CF06K6E-TF5-945	
CF06K6E-TFD-970		CF06K6E-TFD-945	
CF09K6E-PFV-970		CF09K6E-PFV-945	Includes Capacitor & Relay Assembly
CF09K6E-PFV-979	Includes Capacitor & Relay Assembly		
CF09K6E-TF5-970		CF09K6E-TF5-945	
CF09K6E-TFD-970		CF09K6E-TFD-945	
CF12K6E-PFV-970		CF12K6E-PFV-945	Includes Capacitor & Relay Assembly
CF12K6E-PFV-979	Includes Capacitor & Relay Assembly		
CF12K6E-TF5-970		CF12K6E-TF5-945	
CF12K6E-TFD-970		CF12K6E-TFD-945	

REFRIGERATION DUTY COMPRESSORS

COPELAWELD - HFC-134a

R-Line, RS-Line
-1/4 H.P. to 1 H.P.



R



RS

Standard Model	Volts / Phase	Conditions (°F): Evap/Cond/Return Gas/Liquid/Ambient			Start Capacitor		Run Capacitor		Relay Part # (040-)
		BTUH	Watts	Amps	MFD	Volts	MFD	Volts	
HFC-134a HIGH TEMP		**45 / 130 / 65 / 130 / 95°F**							
RR81C2E-IAA	115-1	8070	1220	15.0	189-227(2)	220	-	-	0168-03 *
RR81C2E-IAV	208/230-1	8070	1220	7.5	64-77(2)	250	-	-	0166-19 *
RR10K1E-CAV	208/230-1	10000	1370	6.5	108-130(2)	220	15	370	0001-54

Standard Model	Volts / Phase	Conditions (°F): Evap/Cond/Return Gas/Liquid/Ambient			Start Capacitor		Run Capacitor		Relay Part # (040-)
		BTUH	Watts	Amps	MFD	Volts	MFD	Volts	
HFC-134a MED TEMP		**20 / 120 / 40 / 120 / 95°F**							
RS40C2E-IAA	115-1	3990	836	10.6	189-227(2)	220	-	-	0168-00 *
RS40C2E-IAV	208/230-1	3990	836	5.3	43-52	220	-	-	0088-03
RS54C2E-IAA	115-1	5400	1070	13.8	270-324	165	-	-	0168-03 *
RS54C2E-IAV	208/230-1	5400	1070	6.9	64-77(2)	250	-	-	0168-01 *

Standard Model	Volts / Phase	Conditions (°F): Evap/Cond/Return Gas/Liquid/Ambient			Start Capacitor		Run Capacitor		Relay Part # (040-)
		BTUH	Watts	Amps	MFD	Volts	MFD	Volts	
HFC-134a EXT MED TEMP		**-10 / 120 / 40 / 120 / 95°F**							
RF18C2E-IAA	115-1	1885	596	10.3	270-324	165	-	-	0168-03 *
RF18C2E-IAV	230-1	1885	596	5.2	88-106	220	-	-	0168-04 *

Note: Extended Medium Temp ("EM") is rated -25°F to +30°F. See Data Sheet.

*** ROHS - Upgraded Parts**

Standard Model	Volts / Phase	Conditions (°F): Evap/Cond/Return Gas/Liquid/Ambient			Start Capacitor		Run Capacitor		Relay Part # (040-)
		BTUH	Watts	Amps	MFD	Volts	MFD	Volts	
HFC-404A EXT MED TEMP		**20 / 120 / 40 / 120 / 95°F**							
RS43C1E-CAA	115-1	4170	944	10.6	243-292	115	15	370	0166-21 *
RS43C2E-IAA	115-1	4170	944	10.6	243-292	115	-	-	0001-62
RS43C1E-CAV	208/230-1	4170	944	5.3	43-52	220	10	370	0166-14
RS43C1E-IAV	208/230-1	4170	944	5.3	43-52	220	-	-	0088-03
RS55C1E-PAA	115-1	5400	1140	10.3	124-149	220	25	370	0166-19 *
RS55C1E-CAV	208/230-1	5400	1140	5.2	64-77	250	15	370	0166-14
RS55C1E-PAV	208/230-1	5400	1140	5.2	64-77	250	15	370	0001-54
RS64C2E-CAA	115-1	6460	1470	12.9	72-86	330	30	440	0140-03
RS64C2E-IAA	115-1	6460	1470	12.9	108-130	220	-	-	0166-19 *
RS64C2E-PAA	115-1	6460	1470	12.9	72-86	330	30	440	0140-03
RS64C2E-CAV	208/230-1	6460	1470	6.4	88-106	220	15	370	0001-54
RS64C2E-IAV	208/230-1	6460	1470	6.4	108-130	220	-	-	0168-00
RS70C1E-PFV	208/230-1	6980	1250	5.5	108-130	220	25	370	0166-19 *
RS70C1E-TFC	208/230-3	6800	1220	3.6	-	-	-	-	
RS97C2E-CAA	115-1	9590	1940	19.4	145-174	220	35	370	0001-59
RS97C2E-CAV	208/230-1	9590	1940	9.7	88-106	250	25	440	0001-54
RS97C1E-TFC	208/230-3	9400	1890	6.3	-	-	-	-	

*** ROHS - Upgraded Parts**

REFRIGERATION DUTY COMPRESSORS

COPELAWELD - HFC-404A, HFC-507

CS-Line

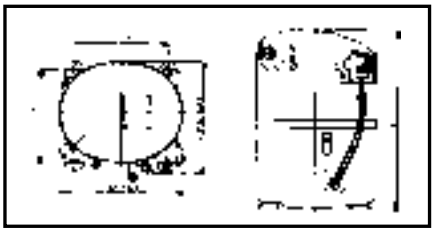

Typical CS*6 Family

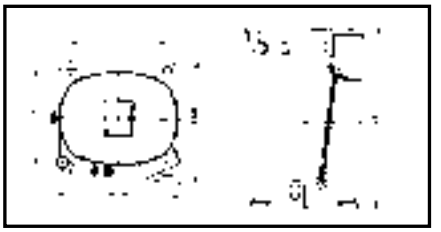

Typical CS*3 Family



Standard Model	Volts / Phase	Conditions (°F): Evap/Cond/Return Gas/Liquid/Ambient			Replacement Parts				
		BTUH	Watts	Amps	Start Capacitor		Run Capacitor		Relay Part # (040-)
					MFD	Volts	MFD	Volts	
HFC-404A EXT MED TEMP		**20 / 120 / 40 / 120 / 95°F**							
CS10K6E-PFV-945^	208/230-1	10100	1660	7.6	145-174	220	30	370	0166-19 *
CS10K6E-TF5-945	200/230-3	9800	1610	5.1	-	-	-	-	
CS12K6E-PFV-945^	208/230-1	12000	1930	8.8	145-174	220	30	370	0166-19 *
CS12K6E-TF5-945	200/230-3	11700	1860	5.8	-	-	-	-	
CS14K6E-PFV-945^	208/230-1	14100	2280	10.3	145-174	250	35	370	0166-15 *
CS14K6E-TF5-945	200/230-3	13800	2210	6.9	-	-	-	-	
CS14K6E-TFD-945	380/460-3	13800	2210	3.4	-	-	-	-	
CS18K6E-PFV-945^	208/230-1	18100	2780	13.0	145-174	250	35	370	0166-15 *
CS18K6E-TF5-945	200/230-3	17700	2690	8.7	-	-	-	-	
CS18K6E-TFD-945	460-3	17700	2690	4.4	-	-	-	-	
CS20K6E-PFV-945^	208/230-1	20000	3120	14.9	189-227	330	40	370	0166-15 *
CS20K6E-TF5-945	200/230-3	19600	3030	10.0	-	-	-	-	
CS20K6E-TFD-945	460-3	19600	3030	5.0	-	-	-	-	
CS27K6E-PFV-945^	208/230-1	26500	4420	20.3	189-227	330	40	440	0001-64
CS27K6E-TF5-945	200/230-3	26000	4290	13.1	-	-	-	-	
CS27K6E-TFD-945	460-3	26000	4290	6.6	-	-	-	-	
CS33K6E-PFV-956^	208/230-1	31600	5290	25.3	189-227	330	50	440	0166-27 *
CS33K6E-TF5-956	200/230-3	31200	5190	15.2	-	-	-	-	
CS33K6E-TFD-956	380/460-3	31200	5190	7.6	-	-	-	-	

^ Includes Capacitator & Relay Assembly * ROHS - Upgraded Parts All models include mounting parts and crankcase heater

CS Model Cross Reference Guide

Obsolete Model		Current Model	
Model	**Description**	**Model**	**Description**
CS10K6E-PFV-970		CS10K6E-PFV-945	Includes Capacitor & Relay Assembly
CS10K6E-PFV-979	Includes Capacitor & Relay Assembly		
CS10K6E-TF5-970		CS10K6E-TF5-945	
CS10K6E-TFD-970		CS10K6E-TFD-945	
CS12K6E-PFV-970		CS12K6E-PFV-945	Includes Capacitor & Relay Assembly
CS12K6E-PFV-979	Includes Capacitor & Relay Assembly		
CS12K6E-TF5-970		CS12K6E-TF5-945	
CS14K6E-PFV-970		CS14K6E-PFV-945	Includes Capacitor & Relay Assembly
CS14K6E-PFV-979	Includes Capacitor & Relay Assembly		
CS14K6E-TF5-970		CS14K6E-TF5-945	
CS14K6E-TFD-970		CS14K6E-TFD-945	
CS18K6E-PFV-970		CS18K6E-PFV-945	Includes Capacitor & Relay Assembly
CS18K6E-PFV-979	Includes Capacitor & Relay Assembly		
CS18K6E-TF5-970		CS18K6E-TF5-945	
CS18K6E-TFD-970		CS18K6E-TFD-945	
CS20K6E-PFV-970		CS20K6E-PFV-945	Includes Capacitor & Relay Assembly
CS20K6E-PFV-979	Includes Capacitor & Relay Assembly		
CS20K6E-TF5-970		CS20K6E-TF5-945	
CS20K6E-TFD-970		CS20K6E-TFD-945	
CS27K6E-PFV-970		CS27K6E-PFV-945	Includes Capacitor & Relay Assembly
CS27K6E-PFV-979	Includes Capacitor & Relay Assembly		
CS27K6E-TF5-970		CS27K6E-TF5-945	
CS27K6E-TFD-970		CS27K6E-TFD-945	
CS33K6E-PFV-970		CS33K6E-PFV-956	Includes Capacitor & Relay Assembly
CS33K6E-PFV-979	Includes Capacitor & Relay Assembly		
CS33K6E-TF5-970		CS33K6E-TF5-956	
CS33K6E-TFD-970		CS33K6E-TFD-956	
CS33K6E-TFE-970		CS33K6E-TFE-956	

REFRIGERATION & A/C DUTY COMPRESSORS

COPELAWELD - R-22

CR-Line
1-1/2 H.P. to 5 H.P.

Standard Model	Volts / Phase	Conditions (°F): Evap/Cond/Return Gas/Liquid/Ambient			Start Capacitor		Run Capacitor		Relay Part # (040-)
		BTUH	Watts	Amps	MFD	Volts	MFD	Volts	
R-22 AIR COND.		**45 / 130 / 65 / 115 / 95°F**							
CRNQ-050E-PFV	208/230-1	62700	6270	28.0	270-324	330	55	440	0166-27 *
CRNQ-050E-TF5	200/230-3	63300	6270	17.7	-	-	-	-	-
CRNQ-050E-TFD	380/460-3	63300	6270	8.9	-	-	-	-	-
CRNQ-050E-TFE	575-3	63300	6270	7.1	-	-	-	-	-

*** ROHS - Upgraded Parts**



AIR CONDITIONING DUTY COMPRESSORS

COPELAWELD



CRKQ-Optima
1-1/2 H.P. to 4 H.P.

Standard Model	Capacity	Voltage	EER	Amps	RLA	LRA	Start Cap	Run Cap	Relay
CR16K6E-PFV-875	15700	208/230-1	10.0	6.9	7.9	38.0	014-0006-16 *	014-0064-11 *	040-0166-15 *
CR18K6E-PFV-875	18300	208/230-1	9.8	8.8	9.0	41.0	014-0006-16 *	014-0064-11 *	040-0166-15 *
CR18K6E-TF5-875	18300	200/230-3	10.1	5.5	6.0	44.2			
CR20K6E-PFV-875	19800	208/230-1	10.0	8.9	10.1	54.0	014-0036-20 *	014-0064-06 *	040-0166-15 *
CR22K6E-PFV-875	21800	208/230-1	9.8	10.8	11.1	51.5	014-0006-16 *	014-0064-13 *	040-0001-87
CR24K6E-PFV-875	23900	208/230-1	9.8	14.7	13.5	70.5	014-0006-16 *	014-0064-13 *	040-0166-15 *
CR24K6E-TF5-875	23700	200/230-3	10.2	7.0	7.5	40.0			
CR24K6E-TFD-875	23700	460-3	tbd	tbd	3.7	25.0			
CR28K6E-PFV-875	27600	208/230-1	9.7	13.1	15.0	70.5	014-0006-16 *	014-0064-13 *	040-0166-15 *
CR28K6E-TF5-875	27200	200/230-3	10.3	8.0	8.8	60.5			
CR28K6E-TFD-875	27500	460-3	10.5	4.0	4.4	30.0			
CR30K6E-PFV-875	30000	208/230-1	9.7	14.1	15.0	78.0	014-0006-16 *	014-0064-13 *	040-0166-15 *
CR30K6E-TFD-875	29300	460-3	10.3	4.3	4.7	32.0			
CR32K6E-TFD-875	30700	208/230-1	9.5	15.3	17.0	83.0	014-0036-20 *	014-0064-13 *	040-0166-15 *
CR32K6E-TF5-875	31300	200/230-3	10.1	9.1	10.4	63.0			
CR32K6E-TFD-875	32000	460-3	10.3	4.5	5.0	32.0			
CR32K6E-PFV-875	32700	208/230-1	10.0	14.8	16.0	75.0	014-0006-13 *	014-0064-14 *	040-0001-54
CR32K6E-TF5-875	32000	208/230-3	10.0	9.3	10.6	69.0			
CR32K6E-TFD-875	32000	460-3	10.3	4.5	4.7	31.6			
CR34K6E-PFV-875	34000	208/230-1	10.1	15.3	16.7	84.0	014-0006-13 *	014-0064-14 *	040-0001-54
CR34K6E-TF5-875	33900	200/230-3	10.1	9.7	11.8	67.0			
CR34K6E-TFD-875	33500	460-3	10.0	4.8	5.4	29.2			
CR35K6E-PFV-875	36300	208/230-1	10.1	16.8	17.6	93.0	014-0006-13 *	014-0064-14 *	040-0001-54
CR35K6E-TF5-875	35200	208/230-3	10.2	10.0	12.4	68.0			
CR35K6E-TFD-875	35700	460-3	10.2	4.9	5.5	34.5			
CR38K6E-PFV-875	36800	208/230-1	10.1	17.4	18.5	100.0	014-0006-13 *	014-0064-08 *	040-0166-19 *
CR38K6E-TF5-875	36400	208/230-3	10.4	10.2	11.1	85.0			
CR38K6E-TFD-875	36400	460-3	10.4	5.1	5.6	39.0			
CR42K6E-PFV-875	41700	208/230-1	10.3	18.7	19.4	109.6	014-0006-13 *	014-0064-16 *	040-0166-27 *
CR42K6E-TF5-875	40700	200/230-3	10.2	11.5	13.1	80.0			
CR42K6E-TFD-875	41200	460-3	10.3	5.8	5.9	42.0			
CR47KQE-PFV-970	47500	208/230-1	10.4	22.0	24.6	132.0	014-0006-13 *	014-0064-15 *	040-0001-59
CR47KQE-TF5-970	47200	200/230-3	10.4	13.7	16.0	97.0			
CR47KQE-TFD-970	47200	460-3	10.4	6.9	8.2	50.0			
CR53KQE-PFV-970	53300	208/230-1	10.1	24.1	29.0	140.0	014-0006-13 *	014-0064-18 *	040-0001-59
CR53KQE-TF5-970	53200	200/230-3	10.1	16.0	18.0	107.0			
CR53KQE-TFD-970	53200	460-3	10.2	8.0	9.1	55.0			

*** ROHS - Upgraded Parts**

AIR CONDITIONING DUTY COMPRESSORS
COPELAWELD & SCROLL

ZR-Line





Standard Model	Volts / Phase	Conditions (°F): Evap/Cond/Return Gas/Liquid/Ambient			Start Capacitor		Run Capacitor		Relay Part # (040-)
		BTUH	Watts	Amps	MFD	Volts	MFD	Volts	
AIR CONDITIONING		**45 / 130 / 65 / 115 / 95°F**							
ZR18K3E-PFV	208/230-1	18000	1730	8.0	-	-	25	370	
ZR18K1E-PFQ	265-1	18000	1730	6.9	-	-	25	440	
ZR22K3E-PFV(1)	208/230-1	22100	2010	9.0	-	-	40	370	
ZR22K3E-PFJ(1)	265-1	22100	2010	7.8	-	-	40	440	
ZR23K1E-PFV	208/230-1	22900	2100	9.6	-	-	30	370	
ZR23K1E-PFQ	265-1	22900	2100	8.3	-	-	30	440	
ZR24K3E-PFV(1)	208/230-1	24500	2230	10.0	-	-	40	370	
ZR26K1E-PFV	208/230-1	25800	2360	11.5	-	-	35	370	
ZR26K3E-PFV(1)	208/230-1	26200	2340	10.5	-	-	40	370	
ZR26K3E-PFJ(1)	265-1	26200	2340	9.1	-	-	40	440	
ZR28K1E-PFV	208/230-1	28200	2580	12.2	-	-	35	370	
ZR28K1E-PFQ	265-1	28200	2580	10.6	-	-	35	440	
ZR28K3E-PFV	208/230-1	28500	2560	11.5	-	-	45	370	
ZR28K3E-PFJ	265-1	28500	2560	10.0	-	-	45	440	
ZR28K3E-TF5	200/230-3	28500	2540	7.9	-	-	-	-	
ZR28K3E-TFD	460-3	28500	2540	4.0	-	-	-	-	
ZR30K3E-PFV	208/230-1	30500	2740	12.3	-	-	45	370	
ZR30K3E-TF5	200/230-3	30500	2720	8.3	-	-	-	-	
ZR30K3E-TFD	460-3	30500	2720	4.2	-	-	-	-	
ZR32K3E-PFV(1)	208/230-1	32000	2880	13.2	-	-	45	370	
ZR32K3E-TF5(1)	200/230-3	32000	2860	8.9	-	-	-	-	
ZR32K3E-TFD(1)	460-3	32000	2860	4.4	-	-	-	-	
ZR32K3E-TFE(1)	575-3	32000	2860	3.6	-	-	-	-	
ZR34K1E-PFV	208/230-1	33900	3030	13.9	-	-	35	440	
ZR34K1E-PFQ	265-1	33900	3030	12.1	-	-	35	440	
ZR34K3E-PFV	208/230-1	34000	3030	13.7	-	-	50	370	
ZR34K3E-PFJ	265-1	34000	3030	11.9	-	-	50	440	
ZR34K3E-TF5(1)	200/230-3	34000	2970	9.1	-	-	-	-	
ZR34K3E-TFD(1)	460-3	34000	2970	4.5	-	-	-	-	
ZR34K3E-TFE(1)	575-3	34000	2970	3.6	-	-	-	-	

cont'd next page

AIR CONDITIONING DUTY COMPRESSORS

SCROLL

ZR-Line





Standard Model	Volts / Phase	Conditions (°F): Evap/Cond/Return Gas/Liquid/Ambient			Start Capacitor		Run Capacitor		Relay Part # (040-)
		BTUH	Watts	Amps	MFD	Volts	MFD	Volts	
AIR CONDITIONING (cont'd)		**45 / 130 / 65 / 115 / 95°F**							
ZR36K3E-PFV	208/230-1	36500	3260	14.9			50	370	
ZR36K3E-PFJ	265-1	36500	3260	12.9			50	440	
ZR36K3E-TF5	200/230-3	36500	3200	9.7					
ZR36K3E-TFD	460-3	36500	3200	4.8					
ZR36K3E-TFE	575-3	36500	3200	3.9					
ZR40K1E-PFV	208/230-1	39600	3540	17.4			35	440	
ZR40K3E-PFV	208/230-1	40000	3560	16.5			55	370	
ZR40K3E-PFJ	265-1	40000	3560	14.3			55	440	
ZR40K3E-TF5	200/230-3	40000	3500	10.7					
ZR40K3E-TFD	460-3	40000	3500	5.4					
ZR40K3E-TFE	575-3	40000	3500	4.3					
ZR42K3E-PFV	208/230-1	42000	3730	17.2			60	370	
ZR42K3E-PFJ	265-1	42000	3785	14.7			60	440	
ZR42K3E-TF5	200/230-3	42000	3680	11.1					
ZR42K3E-TFD	460-3	42000	3680	5.6					
ZR42K6E-TFE	575-3	42000	3680	4.4					
ZR46K3E-PFV	208/230-1	46100	4130	18.8			60	370	
ZR46K3E-TF5	200/230-3	46100	4100	11.8					
ZR46K3E-TFD	460-3	46100	4100	5.9					
ZR46K3E-TFE	575-3	46100	4100	4.7					
ZR49K3E-PFV	208/230-1	49200	4410	20.1			60	370	
ZR49K3E-TF5	200/230-3	49200	4350	12.6					
ZR49K3E-TFD	460-3	49200	4350	6.3					
ZR49K3E-TFE	575-3	49200	4350	5.0					
ZR54K3E-PFV	208/230-1	54200	4800	21.9			80	370	
ZR54K3E-TF5	200/230-3	53300	4790	13.8					
ZR54K3E-TFD	460-3	53300	4790	6.9					
ZR54K3E-TFE	575-3	53300	4790	5.5					
ZR57K3E-PFV	208/230-1	57500	5060	22.7			80	370	
ZR57K3E-TF5	200/230-3	57200	4910	14.5					
ZR57K3E-TFD	460-3	57200	4960	7.3					
ZR57K3E-TFE	575-3	57200	4960	5.8					
ZR61K3E-PFV	208/230-1	61200	5410	25.3			80	370	
ZR61K3E-TF5	200/230-3	61000	5290	15.4					
ZR61K3E-TFD	460-3	61000	5290	7.7					
ZR61K3E-TFE	575-3	61000	5290	6.2					
ZR68KCE-TF5	200/230-3	68500	5960	18.2					
ZR68KCE-TFD	460-3	68500	5960	9.1					
ZR68KCE-TFE	575-3	68500	5960	7.3					
ZR72KCE-TF5	200/230-3	72300	6280	18.9					
ZR72KCE-TFD	460-3	72300	6280	9.4					
ZR72KCE-TFE	575-3	72300	6280	7.6					
ZR11M3E-TWC	208/230-3	108000	9560	29.8					
ZR11M3E-TWD	460-3	108000	9560	14.9					
ZR11M3E-TWE	575-3	108000	9560	11.9					
ZR12M3E-TWC	208/230-3	125000	10960	33.4					
ZR12M3E-TWD	460-3	125000	10960	16.7					
ZR12M3E-TWE	575-3	125000	10960	13.4					

AIR CONDITIONING DUTY COMPRESSORS
COPELAND SCROLL

ZRK5E Compressor Cross Reference Guide

OBSOLETE MODEL	NEW MODEL	OBSOLETE MODEL	NEW MODEL	OBSOLETE MODEL	NEW MODEL
ZR16K5E-PFV-830	ZR16K5E-PFV-800	ZR32K5E-PFV-830	ZR32K5E-PFV-800	ZR42K5E-TF5-830	ZR42K5E-TF5-800
ZR18K5E-PFV-830	ZR18K5E-PFV-800	ZR32K5E-TFD-830	ZR32K5E-TFD-800	ZR44K5E-PFV-830	ZR44K5E-PFV-800
ZR21K5E-PFV-830	ZR21K5E-PFV-800	ZR32K5E-TFE-830	ZR32K5E-TFE-800	ZR48K5E-PFJ-830	ZR48K5E-PFJ-800
ZR21K5E-TFD-830	ZR21K5E-TFD-800	ZR32K5E-TF5-830	ZR32K5E-TF5-800	ZR48K5E-PFV-830	ZR48K5E-PFV-800
ZR21K5E-TF5-830	ZR21K5E-TF5-800	ZR38K5E-PFV-830	ZR38K5E-PFV-800	ZR48K5E-TFD-830	ZR48K5E-TFD-800
ZR25K5E-PFV-830	ZR25K5E-PFV-800	ZR38K5E-TFD-830	ZR38K5E-TFD-800	ZR48K5E-TFE-830	ZR48K5E-TFE-800
ZR25K5E-TFD-830	ZR25K5E-TFD-800	ZR38K5E-TFE-830	ZR38K5E-TFE-800	ZR48K5E-TF5-830	ZR48K5E-TF5-800
ZR25K5E-TF5-830	ZR25K5E-TF5-800	ZR38K5E-TF5-830	ZR38K5E-TF5-800	ZR54K5E-PFV-830	ZR54K5E-PFV-800
ZR28K5E-PFV-830	ZR28K5E-PFV-800	ZR42K5E-PFV-830	ZR42K5E-PFV-800	ZR54K5E-TFD-830	R54K5E-TFD-800
ZR28K5E-TFD-830	ZR28K5E-TFD-800	ZR42K5E-TFD-830	ZR42K5E-TFD-800	ZR54K5E-TFE-830	ZR54K5E-TFE-800
ZR28K5E-TF5-830	ZR28K5E-TF5-800	ZR42K5E-TFE-830	ZR42K5E-TFE-800	ZR54K5E-TF5-830	R54K5E-TF5-800

ZRK5E* Compressor Service Bill of Material: 800 Standard Stub Tube Service Compressor, Molded Plug Connection, Single Packed with Mounting Parts and Molded Plug.

Copeland Scroll® Service Compressor Specification Chart

Model	ARI Capacity Btu/hr	RLA Amps TF5/TFD	Run Cap. MFD/Volts	Diameter Inches (A)	Suction Height Inches (B)	Discharge Height Inches (C)	Height Inches (D)	Weight Lbs.	Suction Diameter Inches
ZR16K5E-PFV	15,500	9.3	30/370	5.5	10.1	14.2	15.3	47	3/4
ZR18K5E-PFV	18,000	10.7	30/370	5.5	10.1	14.2	15.3	47	3/4
ZR21K5E-PFV	21,000	12.0	35/370	5.5	10.1	14.2	15.3	47	3/4
ZR21K5E-TF5/D	21,000	8.6/4.3	N/A	5.5	10.1	14.2	15.3	45	3/4
ZR25K5E-PFV	25,300	15.0	40/370	5.5	10.1	14.2	15.3	50	3/4
ZR25K5E-TF5/D	25,300	8.9/4.6	N/A	5.5	10.1	14.2	15.3	48	3/4
ZR28K5E-PFV	28,400	15.7	45/370	5.5	10.1	14.2	15.3	50	3/4
ZR28K5E-TF5/D	28,400	11.1/5.7	N/A	5.5	10.1	14.2	15.3	48	3/4
ZR32K5E-PFV	32,600	17.1	50/370	5.5	10.1	14.2	15.3	50	3/4
ZR32K5E-TF5/D	32,600	12/6.4	N/A	5.5	10.1	14.2	15.3	49	3/4
ZR38K5E-PFV	38,000	21.4	55/370	6.5	11.1	15.4	16.4	64	7/8
ZR38K5E-TF5/D	38,000	13.6/6.4	N/A	6.5	11.1	15.4	16.4	60	7/8
ZR42K5E-PFV	42,200	22.1	55/370	6.5	11.1	15.4	16.4	68	7/8
ZR42K5E-TF5/D	42,200	14.3/6.4	N/A	6.5	11.1	15.4	16.4	61	7/8
ZR48K5E-PFV	48,200	24.3	60/440	6.5	11.1	15.4	16.4	72	7/8
ZR48K5E-TF5/D	48,200	17.1/7.9	N/A	6.5	11.1	15.4	16.4	68	7/8
ZR54K5E-PFV	53,500	28.2	80/370	6.5	11.1	15.4	16.4	73	7/8
ZR54K5E-TF5/D	53,500	17.1/7.9	N/A	6.5	11.1	15.4	16.4	69	7/8
ZR57K3E-PFV	58,000	32.1	80/370	7.3	11.68	16.13	18	90	7/8
ZR57K3E-TF5/D	58,500	19.3/9.1	N/A	7.3	11.68	16.13	18	85	7/8
ZR61K3E-PFV	62,000	32.1	80/370	7.3	11.68	16.13	18	90	7/8
ZR61K3E-TF5/D	62,000	19.3/9.1	N/A	7.3	11.68	16.13	18	85	7/8

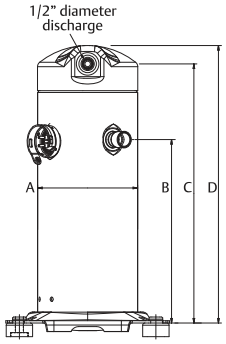

Mounting pattern 7.5" x 7.5" (same as previous Copeland Scroll models)

Rotalock™ Kit Part Numbers			
		Adapter	Seal
Suction	3/4" to 1-1/4"-12	998-0034-01	020-0028-02
Suction	7/8" to 1-1/4"-12	998-0034-02	020-0028-02
Discharge	1/2" to 1"-14	998-0034-15	020-0028-00

Additional information

Copeland Scroll ZRK5 compressors are offered in an -800 bill-of-material option, such as ZR25K5-PFV-800, that includes the compressor with a 42 inch molded plug wiring harness, mounting parts and installation instructions.

Other available information includes:
A/C Compressor Product Guide (2008ECT-113)
ZRK5 Product Brochure (2009ECT-98)

For complete product details and additional information, visit **EmersonClimate.com** and select Online Product Information (OPI) or **CopelandScroll.com**.

AIR CONDITIONING DUTY COMPRESSORS

SCROLL - R410A

ZP-Line



Model	Description R- 410A Scroll Compressors	Voltage	Connections Suct/Disch	Shipping Weight
ZP16K5E-PFV-930	Air Conditioning R-410A Nominal 16,000 BTU	208/230-1-60	3/4”x1/2”	66
ZP20K5E-PFV-930	Air Conditioning R-410A Nominal 20,000 BTU	208/230-1-60	3/4”x1/2”	66
ZP23K5E-PFV-930	Air Conditioning R-410A Nominal 23,000 BTU	208/230-1-60	3/4”x1/2”	66
ZP23K5E-TFD-930	Air Conditioning R-410A Nominal 23,000 BTU	460-3-60	3/4”x1/2”	66
ZP26K5E-PFV-930	Air Conditioning R-410A Nominal 26,000 BTU	208/230-1-60	3/4”x1/2”	66
ZP26K5E-TF5-930	Air Conditioning R-410A Nominal 26,000 BTU	200/230-3-60	3/4”x1/2”	66
ZP26K5E-TFD-930	Air Conditioning R-410A Nominal 26,000 BTU	460-3-60	3/4”x1/2”	66
ZP32K5E-PFV-930	Air Conditioning R-410A Nominal 32,000 BTU	208/230-1-60	3/4”x1/2”	72
ZP32K5E-TF5-930	Air Conditioning R-410A Nominal 32,000 BTU	200/230-3-60	3/4”x1/2”	72
ZP32K5E-TFD-930	Air Conditioning R-410A Nominal 32,000 BTU	460-3-60	3/4”x1/2”	72
ZP36K5E-PFV-930	Air Conditioning R-410A Nominal 36,000 BTU	208/230-1-60	3/4”x1/2”	72
ZP36K5E-TF5-930	Air Conditioning R-410A Nominal 36,000 BTU	200/230-3-60	3/4”x1/2”	72
ZP36K5E-TFD-930	Air Conditioning R-410A Nominal 36,000 BTU	460-3-60	3/4”x1/2”	72
ZP38K5E-PFV-930	Air Conditioning R-410A Nominal 38,000 BTU	208/230-1-60	3/4”x1/2”	72
ZP38K5E-TF5-930	Air Conditioning R-410A Nominal 38,000 BTU	200/230-3-60	3/4”x1/2”	72
ZP41K5E-PFV-930	Air Conditioning R-410A Nominal 41,000 BTU	208/230-1-60	3/4”x1/2”	80
ZP41K5E-TF5-930	Air Conditioning R-410A Nominal 41,000 BTU	200/230-3-60	3/4”x1/2”	80
ZP41K5E-TFD-930	Air Conditioning R-410A Nominal 41,000 BTU	460-3-60	3/4”x1/2”	80
ZP44K5E-PFV-930	Air Conditioning R-410A Nominal 44,000 BTU	208/230-1-60	3/4”x1/2”	80
ZP54K5E-PFV-950	Air Conditioning R-410A Nominal 54,000 BTU	208/230-1-60	7/8”x1/2”	90
ZP54K5E-TF5-950	Air Conditioning R-410A Nominal 54,000 BTU	200/230-3-60	7/8”x1/2”	90
ZP54K5E-TFE-950	Air Conditioning R-410A Nominal 54,000 BTU	575-3-60	7/8”x1/2”	90
ZP67K5E-TF5-950	Air Conditioning R-410A Nominal 67,000 BTU	200/230-3-60	7/8”x1/2”	95
ZP67K5E-TFD-950	Air Conditioning R-410A Nominal 67,000 BTU	460-3-60	7/8”x1/2”	95
ZP67K5E-TFE-950	Air Conditioning R-410A Nominal 67,000 BTU	575-3-60	7/8”x1/2”	95

Additional ZP Scroll (R-410A) Capacities Available To 385,000 BTU

AIR CONDITIONING DUTY COMPRESSORS

SUMMIT SCROLL - R-22

ZR-Line
6 to 12 H.P.



ZR72KC



ZR94 - 144KC

Standard Model	Volts / Phase	Conditions (°F): Evap/Cond/Return Gas/Liquid/Ambient				Amperage Rating		
		BTUH	Watts	Amps	EER	RLA	LRA	MCC
R-22		**45 / 130 / 65 / 115 / 95°F**						
ZR72KC-TF5	200/230-3	72300	6280	18.9	11.5	20.7	156.0	29.0
ZR72KC-TFD	460-3	72300	6280	9.4	11.5	10.0	70.0	14.0
ZR72KC-TFE	575-3	72300	6280	7.6	11.5	8.2	54.0	11.5
ZR84KC-TF5	230-3	84000	7300	22.8	11.5	28.6	196.0	40.0
ZR84KC-TFD	460-3	84000	7300	11.4	11.5	14.2	100.0	20.0
ZR84KC-TFE	575-3	84000	7300	9.1	11.5	9.7	90.0	13.5
ZR94KC-TF5	230-3	94000	8170	25.5	11.5	32.1	195.0	45.0
ZR94KC-TFD	460-3	94000	8170	12.8	11.5	16.4	95.0	23.0
ZR94KC-TFE	575-3	94000	8170	10.2	11.5	12.0	80.0	16.8
ZR108KC-TF5	230-3	108000	9390	29.5	11.5	33.6	225.0	47.0
ZR108KC-TFD	460-3	108000	9390	14.8	11.5	17.3	114.0	24.2
ZR108KC-TFE	575-3	108000	9390	11.8	11.5	13.5	80.0	18.9
ZR125KC-TF5	230-3	125000	10870	32.7	11.5	42.0	239.0	58.9
ZR125KC-TFD	460-3	125000	10870	16.4	11.5	19.2	125.0	26.9
ZR125KC-TFE	575-3	125000	10870	13.1	11.5	13.8	80.0	19.3
ZR144KC-TF5*	230-3	144000						
ZR144KC-TFD*	460-3	144000						
ZR144KC-TFE*	575-3	144000						

Copeland Scroll Cross Reference

Copeland	Bristol	Maneurop	Tecumseh	Trane
ZR72KC	H26A72	MT72	SFA5572E	CRHH062
ZR94KC	H2BG094	MT90	SFA5594E	CRHH075
ZR108KC	H2BG104	MT100	SFA5611E	CRHH083
ZR125KC	H2BG124	MT125	SFA5612E	CRHL100
ZR144KC	H25G144		SFA5615E	

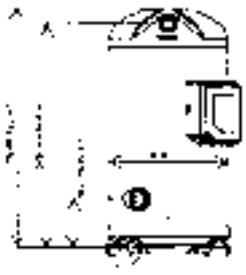

ZR94-144KC

Height Comparison - Scroll Models

Model	Overall Height (inches)	Suction Height (inches)	Disch. Height (inches)
ZR72KC	17-1/4	11-3/4	16-1/8
ZR94KC	18-3/4	3-3/4	17-1/2
ZR108KC	21	4-13/16	19-3/4
ZR125KC	21	4-13/16	9-3/4
ZR144KC*			

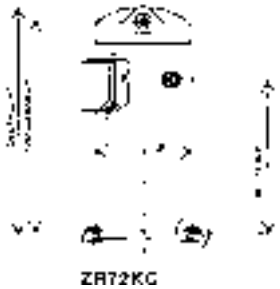

ZR72KC

REFRIGERATION DUTY COMPRESSORS

SCROLL - R-404A

ZS & ZF-Line

Standard Model	Volts / Phase	Conditions (°F): Evap/Cond/Return Gas/Liquid/Ambient			Amperage Rating		
		BTUH	Watts	Amps	RLA	LRA	MCC
R-404A MED TEMP (LIQUID INJECTION)		**20 / 120 / 65 / 120 / 95°F**					
ZF09K4E-TF5	200/230-3	21180	2960	9.0	11.1	77.0	15.5
ZF09K4E-TFD	460-3	21180	2960	4.5	5.7	39.0	8.0
ZF09K4E-TFE	575-3	21180	2960	3.6	4.3	31.0	6.0
ZF11K4E-TF5	200/230-3	26220	3700	11.0	13.6	88.0	19.0
ZF11K4E-TFD	460-3	26220	3700	5.5	7.1	44.0	10.0
ZF11K4E-TFE	575-3	26220	3700	4.4	5.0	34.0	7.0
ZF13K4E-TF5	200/230-3	30510	4270	12.3	15.0	99.0	21.0
ZF13K4E-TFD	460-3	30510	4270	6.2	8.2	49.5	11.5
ZF13K4E-TFE	575-3	30510	4270	4.9	6.8	40.0	9.5
ZF15K4E-TF5	200/230-3	37400	5170	15.1	21.4	123.0	30.0
ZF15K4E-TFD	460-3	37400	5170	7.6	9.6	62.0	13.5
ZF15K4E-TFE	575-3	37400	5170	6.0	7.8	50.0	11.0
ZF18K4E-TF5	200/230-3	44960	6280	19.2	20.7	156.0	33.5
ZF18K4E-TFD	460-3	44960	6280	9.6	10.0	70.0	13.0
ZF33K4E-TWC	208/230-3	76910	11480	34.5	43.6	255.0	61.0

Standard Model	Volts / Phase	Conditions (°F): Evap/Cond/Return Gas/Liquid/Ambient			Amperage Rating		
		BTUH	Watts	Amps	RLA	LRA	MCC
R-404A EXT MED TEMP (NO INJECTION)		**20 / 120 / 65 / 120 / 95°F**					
ZS21K4E-TF5	200/230-3	20930	2890	8.9	11.1	77.0	15.0
ZS21K4E-TFD	460-3	20930	2890	4.5	5.7	39.0	8.0
ZS21K4E-TFE	575-3	20930	2890	3.6	4.3	31.0	6.0
ZS26K4E-TF5	200/230-3	26000	3550	10.6	13.6	88.0	19.0
ZS26K4E-TFD	460-3	26000	3550	5.3	7.1	44.0	10.0
ZS26K4E-TFE	575-3	26000	3550	47.2	5.0	34.0	7.0
ZS30K4E-TF5	200/230-3	30000	4070	11.8	15.0	99.0	21.0
ZS30K4E-TFD	460-3	30000	4070	5.9	8.2	49.5	11.5
ZS30K4E-TFE	575-3	30000	4070	4.7	6.8	40.0	9.5
ZS38K4E-TF5	200/230-3	36940	5170	15.1	21.4	123.0	30.0
ZS38K4E-TFD	460-3	36940	5170	7.6	9.6	62.0	13.5
ZS38K4E-TFE	575-3	36940	5170	6.0	7.8	50.0	11.0
ZS45K4E-TF5	200/230-3	44550	6110	18.7	20.7	156.0	33.5
ZS45K4E-TFD	460-3	44550	6110	9.4	10.0	70.0	13.0
ZS75K4E-TWC	208/230-3	76650	11280	34.0	43.6	255.0	61.0

Standard Model	Volts / Phase	Conditions (°F): Evap/Cond/Return Gas/Liquid/Ambient			Amperage Rating		
		BTUH	Watts	Amps	RLA	LRA	MCC
R-404A LOW TEMP		**-25 / 105 / 65 / 105 / 95°F**					
ZF09K4E-TF5	200/230-3	9300	2070	7.1	9.6	77.0	13.5
ZF09K4E-TFD	460-3	9300	2070	3.6	5.0	39.0	7.0
ZF09K4E-TFE	575-3	9300	2070	2.8	3.9	31.0	5.5
ZF11K4E-TF5	200/230-3	11500	2580	8.5	12.1	88.0	17.0
ZF11K4E-TFD	460-3	11500	2580	4.3	6.4	44.0	9.0
ZF11K4E-TFE	575-3	11500	2580	3.4	4.6	34.0	6.5
ZF13K4E-TF5	200/230-3	13200	3020	9.3	13.2	99.0	18.5
ZF13K4E-TFD	460-3	13200	3020	4.7	7.1	49.5	10.0
ZF13K4E-TFE	575-3	13200	3020	3.7	5.7	40.0	8.0
ZF15K4E-TF5	200/230-3	16400	3560	11.3	18.9	123.0	26.5
ZF15K4E-TFD	460-3	16400	3560	5.7	8.9	62.0	12.5
ZF15K4E-TFE	575-3	16400	3560	4.5	6.4	50.0	9.0
ZF18K4E-TF5	200/230-3	19500	4320	14.9	21.8	156.0	30.5
ZF18K4E-TFD	460-3	19500	4320	7.5	8.9	70.0	12.5
ZF33K4E-TWC	208/230-3	33100	7630	25.7	43.6	255.0	61.0

Note: Average performance of these compressors is slightly different with R-507 (AZ-50) versus R-404A data shown. Capacity and mass flow are approximately 3% higher. Watts and amps are approximately 2% higher. Refer to R-404A data sheets. Separate performance data for R-507 will not be published.

REFRIGERATION & A/C DUTY COMPRESSORS

COPELAMETIC R12, R22, R502

1/4 to 3 H.P.

K



E



L



Specifications (Air-Cooled)

Standard Model	Nom. H.P.	Cyls.	60 Hertz Application		Bore (in)	Stroke (in)	CFH @ 1750 R.P.M.	Oil Charge (Fl. Oz)		Overall Dimensions (in.)			Base Mounting Centers (in)		Discharge Shut-Off Valve (in)	Suction Shut-Off Valve (in)
			R-12	R-502				Initial	Recharge	L	W	H	L	W		
KAE*-0050	1/2	2	M		1-1/2	5/8	134.2	24	20	14	8	10-11/16	8-3/16	6-3/8	3/8 FL	1/2 FL
KAG*-0050	1/2	2	XL		1-7/16	15/16	184.9	24	20	14	8	10-11/16	8-3/16	6-3/8	3/8 FL	1/2 FL
KAM*-0050	1/2	2	L		1-3/8	15/16	169.0	24	20	14	8	10-11/16	8-3/16	6-3/8	3/8 FL	1/2 FL
KAN*-0050	1/2	2	H	L	1-3/8	5/8	112.8	24	20	14	8	10-11/16	8-3/16	6-3/8	3/8 FL	1/2 FL
KAA*-0075	3/4	2	XL		1-11/16	15/16	255.0	24	20	14	8	10-11/16	8-3/16	6-3/8	3/8 FL	5/8 FL
KAJ*-0075	3/4	2	L		1-9/16	15/16	218.4	24	20	14	8	10-11/16	8-3/16	6-3/8	3/8 FL	5/8 FL
KAM*0075	3/4	2	H	L	1-3/8	15/16	169.0	24	20	14	8	10-11/16	8-3/16	6-3/8	3/8 FL	5/8 FL
KAG*0075	3/4	2	M		1-7/16	15/16	184.9	24	20	14	8	10-11/16	8-3/16	6-3/8	3/8 FL	5/8 FL
KAJ*-0100	1	2	H	L	1-9/16	15/16	218.4	24	20	14	8	10-11/16	8-3/16	6-3/8	1/2 FL	5/8 FL
KAK*-0100	1	2	M		1-11/16	15/16	255.0	24	20	14	8	10-11/16	8-3/16	6-3/8	1/2 FL	5/8 FL
KAL*-0100	1	2	L		1-7/8	15/16	313.0	24	20	14	8	10-11/16	8-3/16	6-3/8	1/2 FL	5/8 FL
KAT*-0100	1	2	XL		1-7/8	1-5/32	389.0	24	20	14	8	10-11/16	8-3/16	6-3/8	1/2 FL	5/8 FL
KAL*-0150	1-1/2	2	H	L	1-7/8	15/16	313.0	24	20	14-3/8	8	10-11/16	8-3/16	6-3/8	1/2 FL	7/8 SWT
KAT*-0150	1-1/2	2	M		1-7/8	1-5/32	389.0	24	20	14-3/8	8	10-11/16	8-3/16	6-3/8	1/2 FL	7/8 SWT
EAA*-0150	1-1/2	2		L	1-3/4	1-5/32	339.0	80	72	16-1/8	12	13-3/4	10-1/16	10-1/2	1/2 FL	7/8 SWT
EAJ*-0150	1-1/2	2	XL		1-15/16	1-3/8	492.4	80	72	16-1/8	12	13-3/4	10-1/16	10-1/2	1/2 FL	7/8 SWT
EAV*0150	1-1/2	2	L		2	1-5/32	442.0	80	72	16-1/8	12	13-3/4	10-1/16	10-1/2	1/2 FL	7/8 SWT
EAD*-0200	2	2		L	1-7/8	1-5/32	389.0	80	72	16-1/8	12	13-3/4	10-1/16	10-1/2	1/2 FL	7/8 SWT
EAL*-0200	2	2	M		2	1-3/8	524.0	80	72	16-1/8	12	13-3/4	10-1/16	10-1/2	1/2 FL	7/8 SWT
EAV*-0200	2	2	H	L	2	1-5/32	442.0	80	72	16-1/8	12	13-3/4	10-1/16	10-1/2	1/2 FL	7/8 SWT
3AH*0200	2	2	L		2-1/4	1-3/8	664.2	96	88	18	13-3/8	12-23/32	11-5/8	11	1/2 FL	7/8 SWT
3AJ*-0200	2	2	L		2-1/8	1-3/8	593.2	96	88	18	13-3/8	12-23/32	11-5/8	11	1/2 FL	7/8 SWT
3AB*0310	3	2		L	2	1-3/8	524.0	96	88	18-1/32	13-3/8	15-5/8	11-5/8	11	5/8 FL	1-1/8 SWT
LAC*-0310	3	2	M	XL	2-7/16	1-7/16	815.0	96	88	18-1/32	13-3/8	15-5/8	11-5/8	11	5/8 FL	1-1/8 SWT
LAH*-0310	3	2	H	L	2-1/4	1-7/16	698.0	96	88	18-1/32	13-3/8	15-5/8	11-5/8	11	5/8 FL	1-1/8 SWT
LAL*-0310	3	2	M		2-3/8	1-7/16	775.0	96	88	18-1/32	13-3/8	15-5/8	11-5/8	11	5/8 FL	1-1/8 SWT
LAM*-0310	3	2	L		2-7/16	1-11/16	952.0	96	88	18-1/32	13-3/8	15-5/8	11-5/8	11	5/8 FL	1-1/8 SWT

- KAL/KAT-1-1/2 HP models include positive displacement oil pump.
- All air-cooled models except LAC, LAH, LAM available with copper tube water coil around body for water-cooled application. Change "A" in model code to "W" when ordering compressor with water coil. Example: Change HAF*-0025 to HWF*-0025

REFRIGERATION & A/C DUTY COMPRESSORS

COPELAMETIC R12, R22, R502

1/4 to 3 H.P.

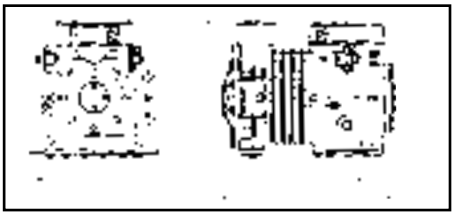

Typical EA Family

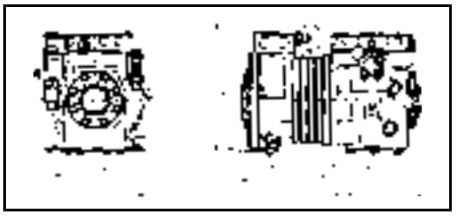

Typical K Family

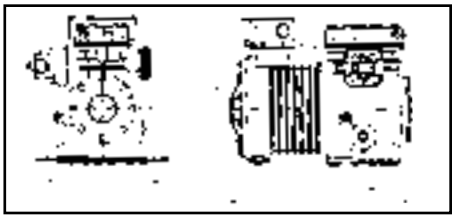

Typical L Family

Electrical Data (Air-Cooled)

Standard Model	Net Weight lbs.	Shipping Weight lbs.	Electrical Data					
			115-1-60	208-1-60	230-1-60	208/230-3-60	460-3-60	575-3-60
KAE*-0050	81	83	IAA	IAH	IAB	TAC		
KAG*-0050	81	83	IAA	IAH	IAB	TAC		
KAM*-0050	81	83	IAA	IAH	IAB	TAC		
KAN*-0050	81	83	IAA	IAH	IAB	TAC		
KAA*-0075	89	91	IAA	IAH	IAB	TAC		
KAJ*-0075	89	91	IAA	IAH	IAB	TAC		
KAM*-0075	89	91	IAA	IAH	IAB	TAC		
KAG*-0075	89	91	IAA	IAH	IAB	TAC		
KAJ*-0100	89	91	CAA	CAH	CAB	TAC	TAD	
KAK*-0100	89	91	CAA	CAH	CAB	TAC	TAD	
KAL*-0100	89	91	CAA	CAH	CAB	TAC	TAD	
KAT*-0100	89	91	CAA	CAH	CAB	TAC	TAD	
KAL*-0150	94	96		CAH	CAB	TAC	TAD	
KAT*-0150	94	96		CAH	CAB	TAC	TAD	
EAA*-0150	152	162		CAH	CAB	TAC	TAD	TAE
EAJ*-0150	152	162		CAH	CAB	TAC	TAD	TAE
EAV*-0150	152	162		CAH	CAB	TAC	TAD	TAE
EAD*-0200	155	165		CAH	CAB	TAC	TAD	TAE
EAL*-0200	158	168		CAH	CAB	TAC	TAD	TAE
EAV*-0200	158	168		CAH	CAB	TAC	TAD	TAE
3AH*-0200	177	187		CAH	CAB	TAC	TAD	TAE
3AJ*-0200	177	187		CAH	CAB	TAC	TAD	TAE
3AB*-0310	179	189			CAB	TAC	TAD	TAE
LAC*-0310	210	221			CAB	TAC	TAD	TAE
LAH*-0310	210	221			CAB	TAC	TAD	TAE
LAL*-0310	210	221			CAB	TAC	TAD	TAE
LAM*-0310	210	221			CAB	TAC	TAD	TAE

- All compressors may be operated at ±10% of nameplate voltage.
- All three phase models listed as 60 hertz are also rated 50 hertz as follows:
  except model 9TH*-1015-THD/TLD and 9TK*-0505-TFD.
  208/230-3-60 50 hertz is 200/220-3-50
  460-3-60 50 hertz is 380/400-3-50
  575-3-60 50 hertz is 500-3-50

Motor protection:
Second character of Electrical Code indicates:
A - Single External Inherent
F - Internal Inherent, Line Break
H - Internal Thermostats and Two Supplementary Protectors
L - Internal Thermostats and Three Supplementary Protectors
S - Internal Sensor, Solid State

REFRIGERATION & A/C DUTY COMPRESSORS

COPELAMETIC R12, R22, R502

2 to 40 H.P.



4R

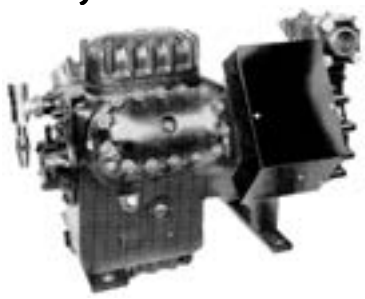

6R

Specifications (Refrigerant-Cooled)

Standard Model	Nom. H.P.	Cyls.	60 Hertz Application			Bore (in)	Stroke (in)	CFH @ 1750 R.P.M.	Oil Charge (Fl. Oz)		Overall Dimensions (in.)			Base Mounting Centers (in)		Discharge Shut-Off Valve (in)	Suction Shut-Off Valve (in)
			R-12	R-22	R-502				Initial	Recharge	L	W	H	L	W		
ERA*-0200	2	2		H		1-3/4	1-5/32	339	80	72	16-1/8	12	13-3/4	10-1/16	10-1/2	5/8 FL	7/8 SWT
ERC*-0200	2	2		M	M	1-3/4	1-5/32	339	80	72	16-1/8	12	13-3/4	10-1/16	10-1/2	5/8 FL	7/8 SWT
ERJ*-0200	2	2	H			1-15/16	1-3/8	492		72	16-1/8	12	13-3/4	10-1/16	10-1/2	5/8 FL	7/8 SWT
ERF*-0310	3	3		H	M	1-7/8	1-3/8	460	80	72	17-1/8	12	13-3/4	10-1/16	10-1/2	5/8 FL	1-1/8 SWT
3RA*-0310	3	3		M	M	2-3/16	1-3/8	628	96	88	18	13	13-23/32	11-5/8	11	5/8 FL	1-1/8 SWT
3RK*-0310	3	3	H			2-5/16	1-3/8	701	96	88	18	13	13-23/32	11-5/8	11	5/8 FL	1-1/8 SWT
NRB*-0400	4	2		H		2-1/4	1-7/16	698	80	72	19-13/16	13	16-3/8	11-5/8	11	5/8 SWT	1-1/8 SWT
MRA*-0500	5	2	M		L	2-1/2	1-13/16	1080	112	96	22-1/8	13	17-29/32	11-5/8	11	7/8 SWT	1-3/8 SWT
MRF*-0500	5	2	H			2-1/2	1-13/16	1080	112	96	22-1/8	13	17-29/32	11-5/8	11	7/8 SWT	1-3/8 SWT
MRB*-0500	5	2	M		XL	2-5/8	1-13/16	1191	112	96	22-1/8	13	17-29/32	11-5/8	11	7/8 SWT	1-3/8 SWT
NRA*-0500	5	2		H		2-7/16	1-7/16	815	80	72	19-13/16	13	16-3/8	11-5/8	11	5/8 SWT	1-1/8 SWT
NRM*-0500	5	2		M	M	2-3/16	2-1/8	970	80	72	20-15/16	13	16-3/8	11-5/8	11	5/8 SWT	1-1/8 SWT
9RA*0505	5	3	M			2-3/16	2	1375	144	128	26-11/16	14	18-1/4	15	12	7/8 SWT	1-3/8 SWT
9RB*-0505	5	3	L			2-3/8	2	1620	144	128	26-11/16	14	18-1/4	15	12	7/8 SWT	1-3/8 SWT
9RJ*-0505	5	3	L			2-3/16	2	1375	144	128	26-11/16	14	18-1/4	15	12	7/8 SWT	1-3/8 SWT
MRH*-0760	7-1/2	2		H	M	2-9/16	1-13/16	1136	112	96	23	13	17-29/32	11-5/8	11	1-1/8 SWT	1-3/8 SWT
9RJ*-0765	7-1/2	3		M	M / L	2-3/16	2	1375	144	128	26-11/16	14	18-1/4	15	12	1-1/8 SWT	1-3/8 SWT
9RB*-0765	7-1/2	3	M		L	2-3/8	2	1620	144	128	26-11/16	14	18-1/4	15	12	1-1/8 SWT	1-3/8 SWT
9RC*-0765	7-1/2	3	H			2-3/8	2	1620	144	128	26-11/16	14	18-1/4	15	12	1-1/8 SWT	1-3/8 SWT
9RS*-0765	7-1/2	3	M		L	2-7/16	2-1/2	2120	144	128	26-11/16	14	18-1/4	15	12	1-1/8 SWT	1-3/8 SWT
9RC*-1015	10	3		H	M	2-3/8	2	1620	144	128	26-1/2	14	18-1/2	15	12	1-1/8 SWT	1-3/8 SWT
9RS*-1015	10	3	H		L	2-7/16	2-1/2	2120	144	128	26-1/2	14	18-1/2	15	12	1-1/8 SWT	1-3/8 SWT
4RA*-1000	10	4	H		L	2-1/2	2	2380	168	152	25-3/16	18-9/16	18-29/32	15	12	1-1/8 SWT	1-5/8 SWT
6RA*-1000	10	6	L			2-1/2	2	3580	184	168	28-1/8	20-1/8	17-29/32	15	12	1-3/8 SWT	1-5/8 SWT
9RS*-1505	15	3		H	M	2-7/16	2-1/2	2120	144	128	28-3/8	14	18-1/2	15	12	1-1/8 SWT	1-5/8 SWT
4RH*-1500	15	4	H			2-11/16	2-3/16	3020	136	120	25-3/16	18-15/16	19-3/32	15	12	1-1/8 SWT	1-5/8 SWT
4RL*-1500	15	4			L	2-11/16	2-3/16	3020	136	120	26-23/32	18-15/16	28-19/32	15	12	1-1/8 SWT	1-5/8 SWT
4RA*-2000	20	4		H	M	2-1/2	2	2380	136	120	25-3/16	18-9/16	18-29/32	15	12	1-1/8 SWT	1-5/8 SWT
6RA*-2000	20	6	H		L	2-1/2	2	3580	160	144	29-3/16	20-1/8	19-5/32	15	12	1-3/8 SWT	2-1/8 SWT
6RH*-2000	20	6	H			2-11/16	2-3/16	4530	160	144	29-3/16	20-1/2	19-5/32	15	12	1-3/8 SWT	2-1/8 SWT
4RH*2500	25	4		H	M	2-11/16	2-3/16	3020	152	136	26-5/32	18-15/16	19-3/32	15	12	1-1/8 SWT	2-1/8 SWT
6RL*-2500	25	6			L	2-11/16	2-3/16	4530	160	144	29-5/16	20-1/2	30-5/32	15	12	1-3/8 SWT	2-1/8 SWT
4RJ1-3000	30	4		H	M	2-15/16	2-3/16	3603	152	136	26-29/32	19-13/16	19-5/32	15	12	1-3/8 SWT	2-1/8 SWT
4RJ2-3000	30	4		H	M	2-15/16	2-3/16	3603	234	218	26-29/32	19-13/16	21-5/32	15	12	1-3/8 SWT	2-1/8 SWT
6RA*-3000	30	6		H	M	2-1/2	2	3580	160	144	29-3/16	20-1/8	19-5/32	15	12	1-3/8 SWT	2-1/8 SWT
6RT*-3000	30	6			L	2-15/16	2-3/16	5404	242	226	29-5/16	20-1/2	30-5/32	15	12	1-3/8 SWT	2-1/8 SWT
6RH*-3500	35	6		H	M	2-11/16	2-3/16	4530	160	144	29-15/16	20-1/2	19-5/32	15	12	1-3/8 SWT	2-1/8 SWT
6RJ*-4000	40	6		H	M	2-15/16	2-3/16	5404	242	226	29-15/16	21-5/8	21-5/32	15	12	1-3/8 SWT	2-1/8 SWT
NRD1-032E																	
NRD1-040E																	
3RA2-031E																	

Temp. Range

High Temp (45°F Max; 0°F Min)	H
Med Temp (25°F Max; -5°F Min)	M
Low Temp (-5°F Max; -40°F Min)	L
Extra Low Temp (-20°F Max; -40°F Min)	XL
Two Stage (see compressor spec. sheet)	T

Individual compressor models may vary in application temperature range. See individual compressor specification sheet for details. Auxiliary forced air cooling required at evaporation temperatures below 0°F. Models with oil pump require oil pressure safety control. The following models have oil pump: NR, MR, 9R, 4R, 6R.

REFRIGERATION & A/C DUTY COMPRESSORS

COPELAMETIC R12, R22, R502

2 to 40 H.P.

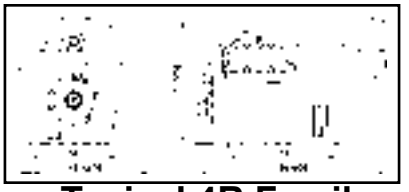

Typical 4R Family



Typical 6R Family

Electrical Data (Refrigerant-Cooled)

Standard Model	Elec. Notes	Net Weight lbs.	Shipping Weight lbs.	Electrical Data				
				230-1-60	208/230-3-60	208/230-3/60 460-3-60	460-3-60	575-3-60
ERA*-0200		160	170	CAB	TAC		TAD	TAE
ERC*-0200		160	170	CAB	TAC		TAD	
ERJ*-0200	1	160	170	CAB	TAC		TAD	TAE
ERF*-0310		177	187	CAB	TAC		TAD	TAE
NRB*-0310		216	232	CFB	TFC		TFD	TFE
NRD*-0310	2	216	232	CFB	TFC		TFD	TFE
NRN*-0310		216	232	CFB	TFC		TFD	TFE
3RA*-0310		177	187	CAB	TAC		TAD	
3RK*-0310		185	193	CAB	TAC		TAD	TAE
NRB*-0400		231	240	CFB	TFC		TFD	
MRA*-0500		269	286	CFB	TFC		TFD	TFE
MRF*-0500	2	269	286	CFB	TFC		TFD	TFE
MRB*-0500		269	286		TFC		TFD	TFE
NRA*-0500		231	248	CFB	TFC		TFD	TFE
NRM*-0500		231	248	CFB	TFC		TFD	TFE
9RA*-0505		309	323	CFB	TFC		TFD	TFE
9RB*-0505		309	323	CFB	TFC		TFD	TFE
9RJ*-0505		309	323	CFB	TFC		TFD	TFE
MRH*-0760		281	298		TFC		TFD	TFE
9RJ*-0765	2	318	332		TFC		TFD	TFE
9RB*-0765		318	332		TFC		TFD	TFE
9RC*-0765	2	318	332		TFC		TFD	TFE
9RS*-0765		333	348		TFC		TFD	TFE
9RC*-1015	3	345	359		TLC		TLD	TLE
9RS*-1015	2, 3	345	359		TLC		TLD	TLE
4RA*-1000		369	400			TSK		TSE
6RA*-1000		415	440			TSK		TSE
9RS*-1505	3	365	379		TLC		TLD	TLE
4RH*-1500		407	429			TSK		TSE
4RL*-1500		407	429			TSK		TSE
4RA*-2000		394	411			TSK		TSE
6RA*-2000		425	450			TSK		TSE
6RH*-2000		430	451			TSK		TSE
4RH*-2500		415	437			TSK		TSE
6RL*-2500		460	482			TSK		TSE
4RJ1-3000		470	495			TSK		TSE
4RJ2-3000		505	530			TSK		TSE
6RA*-3000		475	496			TSK		TSE
6RT*-3000		500	525			TSK		TSE
6RH*-3500		484	507			TSK		TSE
6RJ*-4000	4	535	560			TSN		TSE

Electrical Notes:

1. ERJ2-0200-CAH available for 208-1-60, CAS available for 220-1-50
2. Dual Cycle 200-3-50/60 available. Use TFU electrical code. Non-U.L.
3. TLC, TLD, TLE Electrical Code has three leg motor protection to meet U.L. requirements for primary single phasing. Also available with two leg motor protection as THC, THD or THE.
4. TSN electrical code is 230/460-3-60
5. All TSK, TSN, FSM, FSR, FSD and FSY motors are designed for either part winding or across the line start at the lower rated voltage and across the line start only at the higher rated voltage

- Auxiliary fan cooling standard on following low temperature models:
  4RL*-1500 6RL*-2500 6RT*-3000
- Auxiliary fan cooling is available as optional item on following low temperature models for evaporating temperatures below 0°F:
  NRD*-0310NRN*-0310MRA*-0500 MRB*-0500
  9RB*-0505 9RJ*-0505 9RJ*-0765 9RB*-0765
  9RS*-0765 9RS*-1015 4RA*-1000 6RA*-1000
  6RA*-2000
- Patented crankcase venting system to insure positive oil return to crankcase
- Positive displacement reversing type oil pump with oil inlet screen on NR, MR, 9R, 4R and 6R models.
- Solid state motor protection on all 4R/6R models. Also on all MR and 9R part winding start models.

REFRIGERATION & A/C DUTY COMPRESSORS

COPELAMETIC R12, R22, R502

5 to 40 H.P.



Capacity Controlled Models

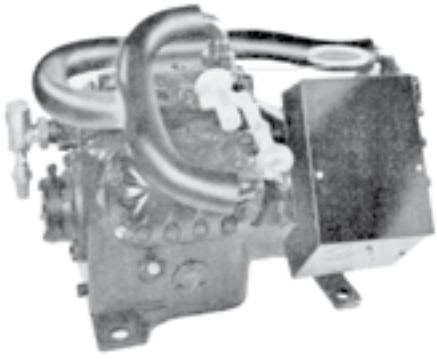

Two Stage Models

Specifications (Capacity Control Models)

Standard Model	Nom. H.P.	Cyls.	60 Hertz Application		Bore (in)	Stroke (in)	CFH @ 1750 R.P.M.	Oil Charge (Fl. Oz)		Overall Dimensions (in.)			Base Mounting Centers (in)		Discharge Shut-Off Valve (in)	Suction Shut-Off Valve (in)
			R-12	R-22				Initial	Recharge	L	W	H	L	W		
9RP*-1015	10	3		H	2-3/8	2	1620	144	128	26-1/2	14-13/16	23-7/8	15	12	1-1/8 SWT	1-3/8 SWT
9RT*-1505	15	3		H	2-7/16	2-1/2	2120	144	128	27-3/8	14-13/16	23-7/8	15	12	1-1/8 SWT	1-5/8 SWT
4RK*-1500	15	4	H		2-11/16	2-3/16	3020	136	120	25-3/16	18-15/16	19-3/32	15	12	1-1/8 SWT	1-5/8 SWT
4RE*-2000	20	4		H	2-1/2	2	2380	136	120	25-3/16	18-9/16	18-29/32	15	12	1-1/8 SWT	1-5/8 SWT
6RE*-2000[1]	20	6	H		2-1/2	2	3580	160	144	29-3/16	20-1/8	19-5/32	15	12	1-3/8 SWT	2-1/8 SWT
6RK*-2000[1]	20	6	H		2-11/16	2-3/16	4530	160	144	29-3/16	20-1/2	19-5/32	15	12	1-3/8 SWT	2-1/8 SWT
6RN*-2000[2]	20	6	H		2-1/2	2	3580	160	144	29-3/16	22-5/8	19-5/32	15	12	1-3/8 SWT	2-1/8 SWT
6RP*-2000[2]	20	6	H		2-11/16	2-3/16	4530	160	144	29-3/16	23	19-5/32	15	12	1-3/8 SWT	2-1/8 SWT
4RK*-2500	25	4		H	2-11/16	2-3/16	3020	152	136	26-5/32	18-15/16	19-3/32	15	12	1-1/8 SWT	2-1/8 SWT
4RR1-3000	30	4		H	2-15/16	2-3/16	3603	152	136	26-29/32	19-13/16	19-5/32	15	12	1-3/8 SWT	2-1/8 SWT
4RR2-3000	30	4		H	2-15/16	2-3/16	3603	234	218	26-29/32	19-13/16	21-5/32	15	12	1-3/8 SWT	2-1/8 SWT
6RE*-3000[1]	30	6		H	2-1/2	2	3580	160	144	29-3/16	20-1/8	19-5/32	15	12	1-3/8 SWT	2-1/8 SWT
6RN*-3000[2]	30	6		H	2-1/2	2	3580	160	144	29-3/16	22-5/8	19-5/32	15	12	1-3/8 SWT	2-1/8 SWT
6RK*-3500[1]	35	6		H	2-11/16	2-3/16	4530	160	144	29-15/16	20-1/2	19-5/32	15	12	1-3/8 SWT	2-1/8 SWT
6RP*-3500[2]	35	6		H	2-11/16	2-3/16	4530	160	144	29-15/16	23	19-5/32	15	12	1-3/8 SWT	2-1/8 SWT
6RR*-4000[1]	40	6		H	2-15/16	2-3/16	5404	242	226	29-15/16	21-5/8	21-5/32	15	12	1-3/8 SWT	2-1/8 SWT
6RS*-4000[2]	40	6		H	2-15/16	2-3/16	5404	242	226	29-15/16	24-1/8	21-5/32	15	12	1-3/8 SWT	2-1/8 SWT

Two-Stage Motor Specifications

Standard Model	Nom. H.P.	Cyls.	60 Hertz Application		Bore (in)	Stroke (in)	CFH @ 1750 R.P.M.	Oil Charge (Fl. Oz)		Overall Dimensions (in.)			Base Mounting Centers (in)		Discharge Shut-Off Valve (in)	Suction Shut-Off Valve (in)
			R-22	R-502				Initial	Recharge	L	W	H	L	W		
9TK*-0505	5	3	T	T	2-3/16	2	1375	144	128	24-7/8	14	20-7/8	15	12	7/8 SWT	1-3/8 SWT
9TL*-0765	7-1/2	3	T	T	2-3/8	2	1620	144	128	24-7/8	14	20-7/8	15	12	7/8 SWT	1-3/8 SWT
9TH*-1015	10	3	T	T	2-7/16	2-1/2	2120	144	128	25-3/4	14	20-7/8	15	12	7/8 SWT	1-3/8 SWT
6RB*-1000	10	6	T		2-1/2	2	3580	184	168	28-3/32	21-5/8	20-25/32	15	12	1-3/8 SWT	1-3/8 SWT
6RB*-2000	20	6		T	2-1/2	2	3580	160	144	28-3/32	21-5/8	20-25/32	15	12	1-3/8 SWT	1-3/8 SWT
6TM*-2000	20	6	T	T	2-11/16	2-3/16	4530	160	144	28-3/32	22	21	15	12	1-3/8 SWT	1-3/8 SWT

[1] Two Cylinder Unloading [2] Four Cylinder Unloading [3] Minimum Evaporating Temperature: +25°F

* Capacity Control Solenoid Valves are mounted on 9R Models, but shipped as loose items on 4R and 6R models. Sub-Coolers on Two Stage Models are shipped as loose items.

CO2 COMPRESSORS & SCROLLS

EMERSON

CO2 Compressors and Scrolls

Emerson CO2 technology leads the trend to efficiency. This refrigerant's non-ozone depleting, non-flammable and near-zero global warming potential properties create an ideal solution towards reducing your environmental footprint.The efficiency, reliability and liquid-handling advantage of Copeland Scrolls, coupled with Emerson Climate Technologies controls, components and transcritical compression architecture makes it ideal for exploiting the positive characteristics of CO2 refrigeration systems.



Part #	Description	LIST
CO2 Scroll Compressors		
ZO21K5E-TFD-969-CPD	Copeland CO2 Scroll Compressor 460 3 phase	$4,447.00
ZO34K3E-TFD-969-CPD	Copeland CO2 Scroll Compressor (208/230-460-575) 3 phase	$4,735.00
ZO45K3E-TF5-969-CPD	Copeland CO2 Scroll Compressor (208/230-460-575) 3 phase	$4,927.00
ZO58K3E-TFD-969-CPD	Copeland CO2 Scroll Compressor (208/230-460-575) 3 phase	$5,054.00
ZO88KCE-TF5-969-CPD	Copeland CO2 Scroll Compressor (208/230-460-575) 3 phase	$5,822.00
ZO104KCE-TF5-969-CPD	Copeland CO2 Scroll Compressor (208/230-460-575) 3 phase	$5,950.00
Digital CO2 Scroll Compressors		
ZOD34K3E-TFD-969-CPD	Copeland CO2 Digital Scroll Compressor (208/230-460-575) 3 phase	$6,014.00
ZOD104KCE-TFD-969-CPD	Copeland CO2 Digital Scroll Compressor (208/230-460-575) 3 phase	$6,910.00
CO2 Compressors		
4MTLS15ME-FSD-C89-CPD	COPELAND CO2 COMPRESSOR 460/3, 575/3	$32,069.00
4MTLS11ME-FSD-C89-CPD	COPELAND CO2 COMPRESSOR 460/3, 575/3	$26,997.00
4MTLS82KE-FSD-C89-CPD	COPELAND CO2 COMPRESSOR 460/3, 575/3	$25,530.00

REFRIGERATION & A/C DUTY COMPRESSORS

COPELAMETIC R12, R22, R502

5 to 40 H.P.



Electrical Data (Capacity Control Models)

Standard Model	Elec. Notes	Net Weight lbs.	Shipping Weight lbs.	Electrical Data					Service List Price	Salvage List Price
				208/230-3-60	208/230-3/60 460-3-60	460-3-60	575-3-60	220/240-3-50		
9RP*-0765		327	344			TFD	TFE	FSR		
9RP*-1015	3	354	371	TLC	THD / THC	TLD	TLE	FSR		
4RA*-1000		374	405		TSK		TSE	FSR	$19,681.00	
9RT*-1505	3	371	385	TLC	TSC / TFD / E	TLD	TLE	FSR	$18,325.00	
4RK*-1500		412	431		TSK			FSR		
4RE*-2000		403	420		TSK		TSE	FSR	$21,219.00	
6RE*-2000[1]		430	455		TSK		TSE	FSR		
6RK*-2000[1]		435	460		TSK		TSE	FSR		
6RN*-2000[2]		435	460		TSK		TSE	FSR		
6RP*-2000[2]		440	465		TSK		TSE	FSR		
4RK*-2500		427	449		TSK		TSE	FSR		
4RR1-3000		470	495		TSK		TSE	FSR	$29,371.00	
4RR2-3000		470	495		TSK		TSE	FSR	$29,371.00	
6RE*-3000[1]		479	502		TSK		TSE	FSR		
6RN*-3000[2]		479	502		TSK		TSE	FSR	$36,020.00	
6RK*-3500[1]		496	519		TSK		TSE	FSR	$37,799.00	
6RP*-3500[2]		506	529		TSK		TSE	FSR	$25,204.00	
6RR*-4000[1]	4	541	566		TSN		TSE	FSR		
6RS*-4000[2]	4	538	563		TSN		TSE	FSR		

Two-Stage Motor Compressors Electrical Data

Standard Model	Elec. Notes	Net Weight lbs.	Shipping Weight lbs.	Electrical Data					Service List Price	Salvage List Price
				208/230-3-60	208/230-3/60 460-3-60	460-3-60	575-3-60	220/240-3-50		
9TK*-0505		340	357	TFC		TFD	TFE	FSR	$19,217.00	
9TL*-0765		350	367	TFC		TFD		FSR	$13,626.00	
9TH*-1015	3	358	375	TLC	TFC	TLD		FSR		
6RB*-1000		415	436		TSK			FSR		
6RB*-2000		420	441		TSK		TSE	FSR	$25,816.00	
6TM*-2000		420	441		TSK		TSE	FSR	$25,554.00	

Standard Capacity Control Solenoid Voltage is 208/240 VAC. 24 VAC, 120 VAC and 460 VAC also available.

- Compressor capacity can be modulated to match load demand
- Internal capacity control on 4R/6R
- External capacity control on 9R
- Multiple step unloading available on 6R
- Conversion kits available to allow interchangeability between standard and capacity control models.

- Two-stage manifold self contained on compressors
- Safe, efficient performance down to ultra-low temperatures
- Two to one displacement ratio
- Desuperheating expansion valve provides safe motor cooling at high compression ratios

REFRIGERATION DUTY COMPRESSORS

COPELAMETIC - R-22

H, K, E, 3, L & N

Standard Model	Volts / Phase	CFH	Conditions (°F): Evap/Cond/ Return Gas/Liquid/Ambient			Start Capacitor		Run Capacitor		Alternative Applications			Relay Part # (040-)	LIST
			BTUH	Watts	Amps	MFD	Volts	MFD	Volts	R-12	R-502	R-22		
HCFC-22 HIGH TEMP			**45 / 130 / 65 / 130 / 95°F**											
HAG2-0050-CAA	115-1	76.1	5410	640	6.0	400-480	110	10	370			MH	0001-22	$5,770.00
HAG2-0050-CAV	208/230-1	76.1	5410	640	3.0	108-130	330	10	370			MH	0001-03	
HAG1-0050-TAC	208/230-3	76.1	5280	640	2.1	-	-	-	-			MH	-	
KAN2-0075-CAA	115-1	112.8	8360	925	9.6	541-634	110	30	370			MH	0001-22	
KAN2-0075-CAV	208/230-1	112.8	8360	925	4.8	145-174	220	10	370			MH	0001-03	
KAN1-0075-TAC	208/230-3	112.8	8560	900	3.0	-	-	-	-		M	MH	-	
KAR2-0100-CAA	115-1	157.5	11900	1550	14.6	430-516	125	40	330		M	MH	0001-11	
KAR2-0100-CAV	208/230-1	157.5	11900	1550	7.3	145-174	220	20	440		M	MH	0001-04	
KAR1-0100-TAC	208/230-3	157.5	11500	1520	4.6	-	-	-	-		M	MH	-	
KAR1-0100-TAD	460-3	157.5	11500	1520	2.3	-	-	-	-			MH	-	$6,399.00
KAM2-0100-CAA	115-1	169.2	13800	1470	14.0	430-516	125	40	330			MH	0001-11	
KAM2-0100-CAV	208/230-1	169.2	13800	1470	7.0	145-174	220	20	440			MH	0001-04	
KAM1-0100-TAC	208/230-3	169.2	13300	1350	4.4	-	-	-	-			MH	-	
KAM1-0100-TAD	460-3	169.2	13300	1350	2.2	-	-	-	-			MH	-	
KAGB-0150-CAV	208/230-1	184.9	15300	1620	8.0	130-156	330	25	480			MH	0001-00	$6,565.00
KAGA-0150-TAC	208/230-3	184.9	15300	1590	5.4	-	-	-	-			MH	-	$7,066.00
KAGA-0150-TAD	460-3	184.9	15300	1590	2.7	-	-	-	-		M	MH	-	
KAKB-0200-CAV	208/230-1	254.8	21400	2320	11.0	130-156	330	25	480	M	M	LMH	0001-00	
KAKA-0200-TAC	208/230-3	254.8	21000	2240	7.3	-	-	-	-	M	M	LMH	-	$7,681.00
KAKA-0200-TAD	460-3	254.8	21000	2240	3.7	-	-	-	-	M		LMH	-	
ERA2-0200-CAB	230-1	338.0	20100	2440	11.6	130-156	330	25	440			MH	0001-00	$10,332.00
ERA1-0200-TAC	208/230-3	338.0	20000	2380	8.1	-	-	-	-			MH	-	
ERA1-0200-TAD	460-3	338.0	20000	2380	4.1	-	-	-	-			MH	-	
ERA1-0200-TAE	575-3	338.0	20000	2380	3.3	-	-	-	-			MH	-	
EAD2-0320-CAB	230-1	388.0	30700	3310	14.9	189-227	330	40	440			MH	0001-08	
EAD1-0320-TAC	208/230-3	388.0	31800	3270	10.1	-	-	-	-			MH	-	
EAD1-0320-TAD	460-3	388.0	31800	3270	5.1	-	-	-	-		M	MH	-	
ERF2-0310-CAB	230-1	461.4	35900	4280	17.3	130-156	330	40	440		M	MH	0001-08	
ERF1-0311-TAC	208/230-3	461.4	35200	3840	11.6	-	-	-	-		M	MH	-	
ERF1-0311-TAD	460-3	461.4	35200	3840	5.8	-	-	-	-		M	MH	-	
ERF1-0300-TAE	575-3	461.4	35200	3840	4.6	-	-	-	-		M	MH	-	$11,480.00
NRB2-0400-TFC	208/230-3	694.6	50100	5420	16.9	-	-	-	-		M	MH	-	$14,628.00
NRB2-0400-TFD	460-3	694.6	50100	5420	8.5	-	-	-	-		M	MH	-	
NRB2-0400-TFE	575-3	694.6	50100	5420	6.8	-	-	-	-		M	MH		$9,354.00
NRA2-0500-TFC	208/230-3	815.2	57600	6910	19.4	-	-	-	-		M	MH	-	$14,730.00
NRA2-0500-TFD	460-3	815.2	57600	6910	9.7	-	-	-	-		M	MH	-	
NRA2-0500-TFE	575-3	815.2	57600	6910	7.8	-	-	-	-			MH	-	$9,113.00

Standard Model	Volts / Phase	CFH	Conditions (°F): Evap/Cond/ Return Gas/Liquid/Ambient			Start Capacitor		Run Capacitor		Alternative Applications		Relay Part # (040-)	LIST
			BTUH	Watts	Amps	MFD	Volts	MFD	Volts	R-502	R-22		
HCFC-22 MED TEMP			**20 / 120 / 65 / 120 / 95°F**										
HAJ2-0050-CAA	115-1	84.1	3800	570	5.6	400-480	110	10	370	M	M	0001-22	
HAJ2-0050-CAV	208/230-1	84.1	3800	570	2.8	108-130	330	10	370	M	M	0001-03	
HAJ1-0050-TAC	208/230-3	84.1	3700	570	2.0	-	-	-	-	M	M	-	
KAE2-0075-CAA	115-1	134.2	6090	950	9.8	541-634	110	30	370	L	M	0001-22	
KAE2-0075-CAV	208/230-1	134.2	6090	950	4.9	145-174	220	10	370	L	M	0001-03	
KAE1-0075-TAC	208/230-3	134.2	6080	930	3.0	-	-	-	-	L	M	-	
ERC2-0200-CAB	230-1	338.0	14400	2120	8.7	130-156	330	25	440	M	M	0001-00	$10,332.00
ERC1-0200-TAC	208/230-3	338.0	14500	2020	6.1	-	-	-	-	M	M	-	
ERC1-0200-TAD	460-3	338.0	14500	2020	3.1	-	-	-	-	M	M	-	
3RA2-0310-CAB	230-1	628.0	25800	4030	20.7	130-156	330	40	440	M	M	0001-08	$12,291.00
3RA1-0311-TAC	208/230-3	628.0	25800	3830	14.3	-	-	-	-	M	M	-	
3RA1-0311-TAD	460-3	628.0	25800	3830	7.2	-	-	-	-	M	M	-	
NRM1-0500-TFC	208/230-3	970.5	43400	6130	19.7	-	-	-	-	M	M	-	$14,730.00
NRM1-0500-TFD	460-3	970.5	43400	6130	9.9	-	-	-	-	M	M	-	
NRM1-0500-TFE	575-3	970.5	43400	6130	7.9	-	-	-	-	M	M	-	

REFRIGERATION DUTY COMPRESSORS

COPELAMETIC - R-22

H, K, E, 3, L & N

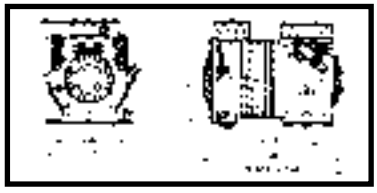

Typical H Family



Typical 3A Family



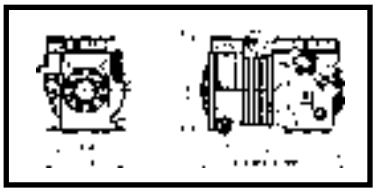

Typical K Family



Typical 3R Family



Typical EA Family



Typical L Family



Typical ER Family



Typical N Family

Standard Model	Volts / Phase	CFH	Conditions (°F): Evap/Cond/ Return Gas/Liquid/Ambient			Start Capacitor		Run Capacitor		Alternative Applications			Relay Part # (040-)	LIST
			BTUH	Watts	Amps	MFD	Volts	MFD	Volts	R-12	R-502	R-22		
HCFC-22 LOW TEMP			-25 / 105 / 65 / 105 / 95°F											
HAFB-0033-IAA	115-1	63.4	695	295	4.7	324-389	115	-	-	MH	L	L	0001-01	
HATB-0051-CAA	115-1	123.3	1930	565	8.5	400-480	115	10	370	M		L	0001-11	
KANB-0050-IAA	115-1	112.8	1340	425	6.4	400-480	115	-	-	MH	L	L	0001-01	
KANB-0050-CAV	208/230-1	112.8	1340	426	3.2	108-130	330	10	370	MH	L	L	0001-03	
KAMB-0075-CAA	115-1	169.2	2720	670	7.4	430-516	125	40	330			L	0001-11	
KAMB-0075-CAV	208/230-1	169.2	2720	670	3.7	145-174	220	10	370	MH	L	L	0001-03	
KAMA-0075-TAC	208/230-3	169.2	2470	590	2.3	-	-	-	-	MH	L	L	-	
KAJB-0100-CAV	208/230-1	218.5	3470	820	4.1	145-174	220	20	440	MH	L	L	0001-04	
KAJA-0101-TAC	208/230-3	218.5	3370	800	3.1	-	-	-	-	MH	L	L	-	
KAKB-0200-CAV	208/230-1	254.8	4030	1090	5.9	130-156	330	25	480	M	M	LMH	0001-00	
KAKA-0200-TAC	208/230-3	254.8	3810	905	3.9	-	-	-	-	M	M	LMH	-	$7,681.00
KAKA-0200-TAD	460-3	254.8	3810	905	2.0	-	-	-	-	M	M	LMH	-	
EADB-0200-CAB	230-1	388.0	5590	1340	6.2	130-156	330	25	440		L	L	0001-00	
EADA-0200-TAC	208/230-3	388.0	5710	1290	4.3	-	-	-	-		L	L	-	
EADA-0200-TAD	460-3	388.0	5710	1290	2.2	-	-	-	-		L	L	-	
EAVB-0210-CAV	208/230-1	441.4	6820	1730	8.3	189-227	330	40	440			L	0001-08	
EAVA-0210-TAC	208/230-3	441.4	6470	1410	5.2	-	-	-	-			L	-	
EAVA-0210-TAD	460-3	441.4	6470	1410	2.6	-	-	-	-			L	-	
3AJB-0210-CAB	230-1	592.6	8310	2010	10.0	189-227	330	40	440			L	0001-08	
3AJA-0210-TAC	208/230-3	592.6	8420	2040	7.4	-	-	-	-			L	-	$11,277.00
LAHB-0311-CAB	230-1	694.6	9890	2270	10.4	189-227	330	40	440			L	0001-08	
LAHA-0310-TAC	208/230-3	694.6	9840	2080	7.6	-	-	-	-			L	-	
LAHA-0310-TAD	460-3	694.6	9840	2080	3.8	-	-	-	-			L	-	

REFRIGERATION DUTY COMPRESSORS

COPELAMETIC - R-134a, R-404A, R-507

H, K, E, 3A, 3R, L & N



H



K



E



3



L



N

Standard Model	Volts / Phase	CFH	Conditions (°F): Evap/Cond/ Return Gas/Liquid/Ambient			Start Capacitor		Run Capacitor		Alternative Applications				Relay Part # (040-)	LIST
			BTUH	Watts	Amps	MFD	Volts	MFD	Volts	R-502	R-22	R-134a	R-507*		
R-404A MED TEMP			**20 / 120 / 65 / 120 / 95°F**												
HAJB-005E-CAV	208/230-1	84.2	3910	685	3.3	108-130	330	10	370		M		M	0001-09	$5,995.00
KARB-010E-CAV	208/230-1	157.5	7490	1320	6.2	145-174	220	20	440	M	MH		M	0001-04	$5,995.00
KARA-010E-TAC	208/230-3	157.5	7220	1280	4.1	-	-	-	-		MH		M	-	$5,995.00
KAKB-021E-CAV	208/230-1	255.1	12100	2130	9.6	130-156	330	40	440				M	0001-00	$7,165.00
KAKA-020E-TAC	208/230-3	255.1	11900	1850	6.4	-	-	-	-				M	-	$7,165.00
ERCA-021E-TAC	208/230-3	337.8	15100	2480	7.3	-	-	-	-		M		M	-	$9,636.00
ERFA-031E-TAC	208/230-3	461.3	22300	3460	10.3	-	-	-	-		MH		M	-	$10,706.00
ERFA-031E-TAD	460-3	461.3	22300	3460	5.2	-	-	-	-		MH		M	-	$10,706.00
ERFA-031E-TAE	575-3	461.3	22300	3460	4.1	-	-	-	-					-	$11,458.00
3RAA-031E-TAC	208/230-3	628.2	26200	4240	12.2	-	-	-	-		M		M	-	
NRB2-040E-TFC	208/230-3	694.8	29900	4770	15.8	-	-	-	-				M	-	

REFRIGERATION DUTY COMPRESSORS

COPELAMETIC - R-134a, R-404A, R-507

H, K, E, 3A, 3R, L & N





Standard Model	Volts / Phase	CFH	Conditions (°F): Evap/Cond/ Return Gas/Liquid/Ambient			Start Capacitor		Run Capacitor		Alternative Applications				Relay Part # (040-)	
			BTUH	Watts	Amps	MFD	Volts	MFD	Volts	R-502	R-22	R-134a	R-507*		
R-404A LOW TEMP			-25 / 105 / 65 / 105 / 95°F												
HAFB-003E-IAA	115-1	63.4	882	310	4.9	324-389	115	-	370	L	L		L	0001-01	
KANB-005E-IAA	115-1	112.7	1510	443	4.4	400-480	115	-	440		L	MH	L	0001-01	$4,919.00
KANB-005E-CAV	208/230-1	112.7	1510	443	2.2	108-130	330	10	-	L	L		L	0001-03	
KANA-006E-TAC	208/230-3	112.7	1400	421	1.7	-	-	-	440				L	-	
HATB-005E-CAA	115-1	123.3	2070	595	8.6	400-480	115	20	-	M				0001-11	
KAEB-007E-CAA	115-1	134.2	2030	611	7.0	540-648	115	30	-	L	M		L	0001-22	
KAEB-007E-CAV	208/230-1	134.2	2030	611	3.5	145-174	220	10	-	L	M		L	0001-03	
KAEA-007E-TAC	208/230-3	134.2	1980	556	2.3	-	-	-	-	L	M		L	-	
KAMB-007E-CAA	115-1	169.2	2800	730	8.0	430-516	125	40	-		L			0001-25	$5,128.00
KAMB-007E-CAV	208/230-1	169.2	2800	730	4.0	145-174	220	10	-	L	L	MH			$5,128.00
KAMA-007E-TAC	208/230-3	169.2	2610	679	2.6	-	-	-	-	L	L		L	-	$5,128.00
KAJB-010E-CAV	208/230-1	218.6	3810	914	4.5	145-174	220	20		L	L	MH		0001-04	$5,964.00
KAJA-011E-TAC	208/230-3	218.6	3710	929	3.6	-	-	-			L	MH	L	-	$5,964.00
KAJA-011E-TAD	460-3	218.6	3710	929	1.8	-	-	-			L		L	-	$5,964.00
KAKB-011E-CAV	208/230-1	255.1	4410	1280	5.9	145-174	220	40						0001-04	$6,284.00
KALB-015E-CAV	208/230-1	314.7	5690	1440	7.0	130-156	330	25		L		MH	L	0001-00	$6,935.00
KALA-016E-TAC	208/230-3	314.7	5610	1310	5.3	-	-	-				MH	L	-	$6,935.00
KALA-016E-TAD	460-3	314.7	5610	1310	2.6	-	-	-					L	-	
KATA-020E-TAU	200-3	387.8	7020	1640	6.2	-	-	-					L	-	
EADB-021E-CAB	230-1	387.8	6290	1560	7.2	130-156	330	25						0001-00	$9,636.00
EADA-020E-TAC	208/230-3	387.8	6260	1480	4.8	-	-	-		L	L		L	-	$9,636.00
EAVB-021E-CAV	208/230-1	441.3	7510	1900	9.2	189-227	330	40		L	L	MH	L	0001-08	$9,636.00
EAVA-021E-TAC	208/230-3	441.3	6970	1620	5.6	-	-	-		L	L	MH	L	-	$9,636.00
EAVA-021E-TAD	460-3	441.3	6970	1620	2.8	-	-	-			L		L	-	$9,636.00
EAVA-021E-TAE	575-3	441.3	6970	1620	2.2	-	-	-						-	$9,636.00
3ABB-032E-CAB	230-1	524.9	8530	2150	9.8	189-227	330	40						0001-08	$11,168.00
3ABA-031E-TAC	208/230-3	524.9	8440	1940	6.9	-	-	-					L	-	$11,168.00
LAHB-032E-CAB	230-1	694.8	11200	2780	13.2	189-227	330	60						0001-08	$11,448.00
LAHA-032E-TAC	208/230-3	694.8	11200	2440	9.4	-	-	-					L	-	$11,448.00
LAHA-032E-TAD	460-3	694.8	11200	2440	4.7	-	-	-					L	-	
LAHA-032E-TAE	575-3	694.8	11200	2440	3.8	-	-	-						-	$11,448.00
LALA-032E-TAC	208/230-3	774.1	13000	2930	10.5	-	-	-					L	-	$11,448.00
LALA-032E-TAD	460-3	774.1	13000	2930	5.2	-	-	-					L	-	
NRD1-040E-CFB	230-1	815.7	13600	3610	17.3	216-259	330	40						0001-08	$13,641.00
NRD1-032E-TFC	208/230-3	815.7	14300	3470	11.4	-	-	-				MH	L	-	$13,589.00
NRD1-032E-TFD	460-3	815.7	14300	3470	5.7	-	-	-					L	-	$13,589.00

Standard Model	Volts / Phase	CFH	Conditions (°F): Evap/Cond/ Return Gas/Liquid/Ambient			Start Capacitor		Run Capacitor		Alternative Applications				Relay Part # (040-)	LIST
			BTUH	Watts	Amps	MFD	Volts	MFD	Volts	R-502	R-22	R-134a	R-507*		
R-404A EX. LOW TEMP			-25 / 105 / 65 / 105 / 95°F												
HAJB-003E-IAA	115-1	84.2	1230	425	5.6	324-389	115	-	-				XL	0001-01	
KAGB-005E-IAA	115-1	185.1	2930	832	9.6	400-480	115	-	-				XL	0001-01	$4,919.00
KAAB-007E-CAA	115-1	255.1	4200	1130	12.0	540-648	115	25	440				XL	0001-01	$5,255.00
KALB-010E-CAV	208/230-1	314.7	5380	1330	6.2	145-174	220	20	440				XL	0001-04	$5,964.00
KATB-015E-CAV	208/230-1	387.8	6900	1700	8.2	130-156	330	25	480				XL	0001-00	$5,106.00
KATA-015E-TAC	208/230-3	387.8	6700	1650	5.4	-	-	-	-				XL	-	$6,935.00
LALB-032E-CAB	230-1	774.1	12700	3240	15.2	189-227	330	60	440					0001-08	$11,448.00
LACB-032E-CAB	230-1	815.7	14700	3370	15.8	189-227	330	60	440			M	XL	0001-08	$11,448.00
LACA-032E-TAD	460-3	815.7	14600	3070	5.4	-	-	-	-			M	XL	-	

DISCUS COMPRESSOR MODEL NUMBER NOMENCLATURE

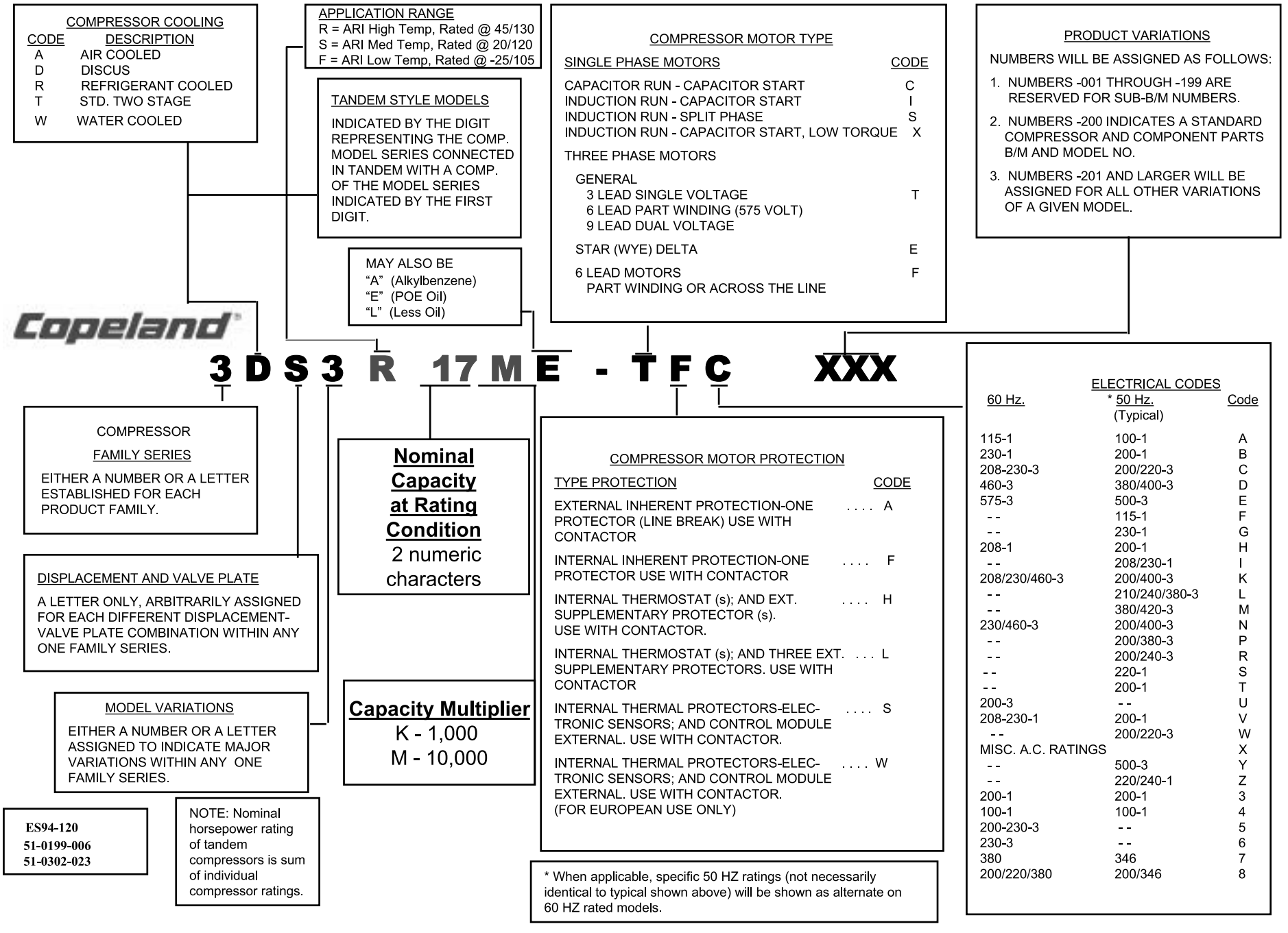

REFRIGERATION DUTY COMPRESSORS

COPELAMETIC DISCUS - R-22

2D, 3D, 4D & 6D
Low Temperature

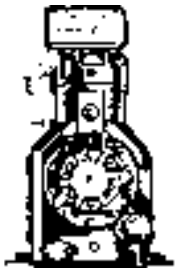

2D

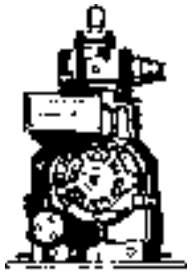

3D

Standard Model Specs

Standard Model	Model With Unloading		CURRENT Model	Volts / Phase	CFH	Conditions (°F): Evap/Cond/ Return Gas/Liquid/Ambient		Amperage Ratings			LIST
	1 Bank	2 Bank				BTUH	Amps	RLA	LRA	MCC	
HCFC-22 LOW TEMP DEMAND COOLING						**-25 / 105 / 65 / 105 / 95°F**					
2DF3-0300-TFC	-	-	2DF3F16K0-	208/230-3	904	13400	10.8	16.8	102.0	22.3	
2DF3-0300-TFD	-	-		460-3	904	13400	5.4	8.1	52.0	11.1	
2DF3-0300-TFE	-	-		575-3	904	13400	4.3	6.7	41.0	9.4	
2DL3-0400-TFC	-	-	2DL3F20KE-	208/230-3	1008	16100	12.1	26.3	161.0	33.8	
2DL3-0400-TFD	-	-		460-3	1008	16100	6.1	10.2	60.0	12.2	
2DL3-0400-TFE	-	-		575-3	1008	16100	4.8	7.7	49.0	10.5	
2DA3-0600-TFC	-	-	2DA3F23KE-	208/230-3	1135	18800	14.8	28.8	161.0	35.6	
2DA3-0600-TFD	-	-		460-3	1135	18800	7.4	10.2	60.0	13.6	
2DA3-0600-TFE	-	-		575-3	1135	18800	5.9	9.1	49.0	11.8	
2DB3-0600-TFC	-	-	2DB3F25KE-	208/230-3	1191	20500	15.0	28.2	161.0	35.6	
2DB3-0600-TFD	-	-		460-3	1191	20500	7.5	13.3	80.0	18.0	
2DB3-0600-TFE	-	-		575-3	1191	20500	6.0	9.6	63.0	13.4	
3DA3-0600-TFC	Not Permitted		3DA3F28KE-	208/230-3	1375	23200	16.7	30.3	150.0	37.5	
3DA3-0600-TFD	Not Permitted			460-3	1375	23200	8.4	16.8	77.0	16.8	
3DA3-0600-TFE	Not Permitted			575-3	1375	23200	6.7	10.5	62.0	14.7	
3DB3-0750-TFC	Not Permitted		3DB3F33KE-	208/230-3	1620	29000	18.9	31.5	161.0	44.0	
3DB3-0750-TFD	Not Permitted			460-3	1620	29000	9.5	16.1	83.0	22.0	
3DB3-0750-TFE	Not Permitted			575-3	1620	29000	7.6	11.0	67.0	15.4	
3DF3-0900-TFC	Not Permitted		3DF3F40KE-	208/230-3	1915	34400	22.7	39.0	215.0	51.8	
3DF3-0900-TFD	Not Permitted			460-3	1915	34400	11.4	16.9	106.0	23.4	
3DF3-0900-TFE	Not Permitted			575-3	1915	34400	9.1	16.5	84.0	19.7	
3DS3-1000-TFC	Not Permitted		3DS3F46KE-	208/230-3	2120	37500	24.4	42.0	215.0	49.2	
3DS3-1000-TFD	Not Permitted			460-3	2120	37500	12.2	18.6	106.0	22.9	
3DS3-1000-TFE	Not Permitted			575-3	2120	37500	9.8	16.8	84.0	22.7	
4DA3-1000-TSK	Not Permitted		4DA3F47KE-	208/230-3	2380	39000	27.0	42.0	240.0	49.0	
4DA3-1000-TSK	Not Permitted			460-3	2380	39000	13.6	21.0	120.0	24.5	
4DA3-1000-TSE	Not Permitted			575-3	2380	39000	10.8	17.4	106.0	20.0	
4DA3-1000-FSD	Not Permitted			460-3	2380	39000	13.6	20.0	115.0	23.1	
4DL3-1500-TSK	Not Permitted		4DL3F63KE-	208/230-3	3020	52300	37.0	52.6	278.0	73.6	
4DL3-1500-TSK	Not Permitted			460-3	3020	52300	18.3	26.3	139.0	36.8	
4DL3-1500-TSE	Not Permitted			575-3	3020	52300	14.6	20.9	113.0	25.0	
4DL3-1500-FSD	Not Permitted			460-3	3020	52300	18.3	24.5	136.0	28.3	
4DT3-2200-TSK	Not Permitted		4DT3F76KE-	208/230-3	3603	62500	42.0	66.0	374.0	72.0	
4DT3-2200-TSK	Not Permitted			460-3	3603	62500	20.9	33.0	187.0	36.0	
4DT3-2200-TSE	Not Permitted			575-3	3603	62500	16.7	24.2	135.0	27.5	
4DT3-2200-FSD	Not Permitted			460-3	3603	62500	20.9	33.9	180.0	39.1	
6DL3-2700-TSK	Not Permitted		6DL3F93K0-	208/230-3	4530	78300	54.7	80.8	450.0	95.0	
6DL3-2700-TSK	Not Permitted			460-3	4530	78300	27.4	40.4	225.0	47.5	
6DL3-2700-TSE	Not Permitted			575-3	4530	78300	21.9	32.5	172.0	36.4	
6DL3-2700-FSD	Not Permitted			460-3	4530	78300	27.4	41.6	218.0	48.0	
6DT3-3000-TSK	Not Permitted		6DT3F11ME-	208/230-3	5404	93400	64.7	95.6	470.0	106.0	
6DT3-3000-TSK	Not Permitted			460-3	5404	93400	32.4	47.8	235.0	53.0	
6DT3-3000-TSE	Not Permitted			575-3	5404	93400	25.9	39.6	200.0	44.0	
6DT3-3000-FSD	Not Permitted			460-3	5404	93400	32.4	42.8	235.0	49.5	

Note: Specifications subject to change without notice
See individual data sheets for complete performance and operating limits of compressors and AE-1278 for moduload unloading curves.
RLA is abbreviation for "Rated Load Amps"
LRA is abbreviation for "Locked Rotor Amps"
MCC is abbreviation for "Maximum Continuous Current"

REFRIGERATION DUTY COMPRESSORS

COPELAMETIC DISCUS - R-22

2D, 3D, 4D & 6D
Medium Temperature

4D

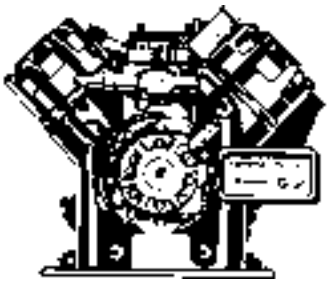

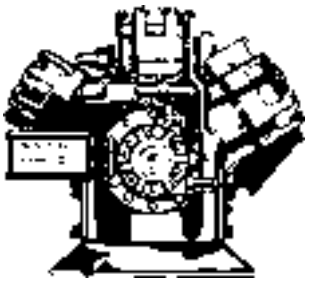

6D

Standard Model Specs

Standard Model	Model With Unloading		CURRENT Model	Volts / Phase	CFH	Conditions (°F): Evap/Cond/ Return Gas/Liquid/Ambient		Amperage Ratings			LIST
	1 Bank	2 Bank				BTUH	Amps	RLA	LRA	MCC	
HCFC-22 MED TEMP						**20 / 120 / 65 / 120 / 95°F**					
2DC3-0500-CFB	-	-	2DC3R53KC-	230-1	716	32700	18.0	29.9	125.0	42.3	
2DC3-0500-TFC	-	-		208/230-3	716	34900	13.7	22.3	120.0	31.2	
2DC3-0500-TFD	-	-		460-3	716	34900	6.9	10.4	60.0	14.6	
2DC3-0500-TFE	-	-		575-3	716	34900	5.5	7.7	40.0	10.6	
2DD3-0500-TFC	-	-	2DD3R63K0-	208/230-3	823	41000	15.3	31.2	120.0	31.2	
2DD3-0500-TFD	-	-		460-3	823	41000	7.7	10.5	60.0	14.7	
2DD3-0500-TFE	-	-		575-3	823	41000	6.1	7.9	40.0	11.1	
2DL3-0750-TFC	-	-	2DL3R78K0-	208/230-3	1008	52400	19.9	31.6	169.0	44.2	
2DL3-0750-TFD	-	-		460-3	1008	52400	10.0	13.8	85.0	19.3	
2DL3-0750-TFE	-	-		575-3	1008	52400	8.0	13.2	67.0	18.5	
2DA3-0750-TFC	-	-	2DA3R89KE-	208/230-3	1135	59400	21.7	32.0	169.0	44.8	
2DA3-0750-TFD	-	-		460-3	1135	59400	10.9	14.1	85.0	19.4	
2DA3-0750-TFE	-	-		575-3	1135	59400	8.7	13.3	67.0	18.6	
3DA3-0750-TFC	3DE3	-	3DA3R10ME-	208/230-3	1375	72800	26.7	41.0	215.0	57.4	
3DA3-0750-TFD	3DE3	-		460-3	1375	72800	13.4	20.0	106.0	28.0	
3DA3-0750-TFE	3DE3	-		575-3	1375	72800	10.7	16.5	84.0	23.0	
3DB3-1000-TFC	3DP3	-	3DB3R12ME-	208/230-3	1620	87200	31.4	43.6	215.0	61.0	
3DB3-1000-TFD	3DP3	-		460-3	1620	87200	15.7	20.0	106.0	28.0	
3DB3-1000-TFE	3DP3	-		575-3	1620	87200	12.6	16.5	84.0	23.1	
3DF3-1200-TFC	3DK3	-	3DF3R15ME-	208/230-3	1915	101000	38.7	48.2	275.0	67.4	
3DF3-1200-TFD	3DK3	-		460-3	1915	101000	19.4	23.6	138.0	30.3	
3DF3-1200-TFE	3DK3	-		575-3	1915	101000	15.5	19.5	110.0	24.5	
3DS3-1500-TFC	3DT3	-	3DS3R17ME-	208/230-3	2120	116000	44.1	59.6	275.0	83.5	
3DS3-1500-TFD	3DT3	-		460-3	2120	116000	22.1	29.0	138.0	40.6	
3DS3-1500-TFE	3DT3	-		575-3	2120	116000	17.6	23.6	110.0	33.0	
4DA3-2000-TSK	4DE3	-	4DA3R18M0-	208/230-3	2380	123000	46.0	66.0	308.0	93.2	
4DA3-2000-TSD	4DE3	-		460-3	2380	123000	22.9	33.0	154.0	46.6	
4DA3-2000-TSE	4DE3	-		575-3	2380	123000	18.3	24.7	135.0	34.6	
4DA3-2000-FSD	4DE3	-		460-3	2380	123000	22.9	33.6	173.0	47.0	
4DH3-2500-TSK	4DK3	-	4DH3R22ME-	208/230-3	3020	158000	59.0	82.2	428.0	115.0	
4DH3-2500-TSD	4DK3	-		460-3	3020	158000	29.7	41.1	214	57.5	
4DH3-2500-TSE	4DK3	-		575-3	3020	158000	23.8	34.4	172.0	48.1	
4DH3-2500-FSD	4DK3	-		460-3	3020	158000	29.7	40.6	206.0	56.8	
4DJ3-3000-TSK	4DR3	-	4DJ3R28M0-	208/230-3	3603	187000	73.0	94.0	470.0	131.6	
4DJ3-3000-TSD	4DR3	-		460-3	3603	187000	36.3	47.0	235.0	65.8	
4DJ3-3000-TSE	4DR3	-		575-3	3603	187000	29.0	39.3	200.0	55.0	
4DJ3-3000-FSD	4DR3	-		460-3	3603	187000	36.3	45.0	235.0	63.0	
6DH3-3500-TSK	6DK3	**6DP3**	6DH3R35M0-	208/230-3	4530	230000	89.4	107.0	565.0	150.0	
6DH3-3500-TSD	6DK3	**6DP3**		460-3	4530	230000	44.7	53.5	283.0	53.5	
6DH3-3500-TSE	6DK3	**6DP3**		575-3	4530	230000	35.8	42.2	230.0	59.1	
6DH3-3500-TSD	6DK3	**6DP3**		460-3	4530	230000	44.7	55.0	260.0	77.0	
6DG3-3500-TSK	6DM3	**6DN3**	6DG3R37M0-	230-3	4957	254000	111.0	135.0	650.0	189.0	
6DG3-3500-TSD	6DM3	**6DN3**		460-3	4957	254000	96.4	62.5	297.0	87.5	
6DG3-3500-TSE	6DM3	**6DN3**		575-3	4957	254000	48.2	46.0	245.0	64.4	
6DG3-3500-FSD	6DM3	**6DN3**		460-3	4957	254000	48.2	66.0	315.0	92.4	
6DG3-3500-FSU	6DM3	**6DN3**		200-3	4957	254000	111.0	150.0	754.0	210.0	
6DJ3-4000-TSN	6DR3	**6DS3**	6DJ3R40M0-	230/460-3	5404	281000	102.9	142.0	594.0	198.0	
6DJ3-4000-TSE	6DR3	**6DS3**		575-3	5404	281000	41.2	53.5	245.0	74.9	
6DJ3-4000-FSD	6DR3	**6DS3**		460-3	5404	281000	51.5	70.0	315.0	98.0	
6DJ3-4000-FSU	6DR3	**6DS3**		200-3	5404	281000	118.0	150.0	754.0	210.0	

Note: Last seven (7) digits of unloader models are same as last seven (7) digits of standard models.

AIR CONDITIONING DUTY COMPRESSORS

COPELAMETIC DISCUS - R-22

2D, 3D, 4D, 6D & 8D

Standard Model Specs

Standard Model	Model With Unloading		CURRENT Model	Volts / Phase	CFH	Conditions (°F): Evap/Cond/ Return Gas/Liquid/Ambient		Amperage Ratings			LIST
	1 Bank	2 Bank				BTUH	Amps	RLA	LRA	MCC	
R-22 AIR CONDITIONING						**45 / 130 / 65 / 115 / 95°F**					
2DC3-0500-TFC	-	-	2DC3R53K0-	208/230-3	716	62700	16.3	22.3	120.0	31.2	
2DC3-0500-TFD	-	-		460-3	716	62700	8.2	40.4	60.0	14.6	
2DC3-0500-TFE	-	-		575-3	716	62700	6.5	7.7	49.0	10.8	
2DD3-0500-TFC	-	-	2DD3R63K0-	208/230-3	823	72800	18.5	22.3	120.0	31.2	
2DD3-0500-TFD	-	-		460-3	823	72800	9.3	10.5	60.0	14.7	
2DD3-0500-TFE	-	-		575-3	823	72800	7.4	7.9	49.0	11.1	
2DL3-0750-TFC	-	-	2DL3R78K0-	208/230-3	1008	90800	23.6	31.6	169.0	44.2	
2DL3-0750-TFD	-	-		460-3	1008	90800	11.8	13.8	85.0	19.3	
2DL3-0750-TFE	-	-		575-3	1008	90800	9.4	13.2	67.0	18.5	
2DA3-0750-TFC	-	-	2DA3R89KE-	208/230-3	1135	103000	26.2	32.0	169.0	44.8	
2DA3-0750-TFD	-	-		460-3	1135	103000	13.1	14.1	85.0	19.4	
2DA3-0750-TFE	-	-		575-3	1135	103000	10.5	13.3	67.0	18.5	
3DA2-0750-TFC	3DE2	-	3DA3R10ME-	208/230-3	1375	123900	31.9	41.0	215.0	57.4	
3DA2-0750-TFD	3DE2	-		460-3	1375	123900	6.0	20.0	106.0	28.0	
3DA2-0750-TFE	3DE2	-		575-3	1375	123900	12.8	16.5	84.0	23.0	
3DB2-1000-TFC	3DP2	-	3DB3R12M0-	208/230-3	1620	145900	37.9	43.6	215.0	61.0	
3DB2-1000-TFD	3DP2	-		460-3	1620	145900	19.0	20.0	106.0	28.0	
3DB2-1000-TFE	3DP2	-		575-3	1620	145900	15.2	16.5	84.0	23.1	
3DS2-1500-TFC	3DT2	-	3DS3R17ME-	208/230-3	2120	194000	52.4	59.6	275.0	83.5	
3DS2-1500-TFD	3DT2	-		460-3	2120	194000	26.2	29.0	138.0	40.6	
3DS2-1500-TFE	3DT2	-		575-3	2120	194000	21.0	23.6	110.0	33.0	
4DA3-2000-TSK	4DE3	-	4DA3R18M0-	208/230-3	2380	216000	55.4	66.0	308.0	93.2	
4DA3-2000-TSD	4DE3	-		460-3	2380	216000	27.7	33.0	154.0	46.6	
4DA3-2000-TSE	4DE3	-		575-3	2380	216000	22.2	24.7	135.0	34.6	
4DA3-2000-FSD	4DE3	-		460-3	2380	216000	27.7	33.6	173.0	47.0	
4DB3-2200-TSK	4DC3	-	4DB3R20M0-	208/230-3	2630	247300	64.2	65.6	374.0	91.8	
4DB3-2200-TSD	4DC3	-		460-3	2630	247300	32.1	32.8	187.0	45.9	
4DB3-2200-TSE	4DC3	-		575-3	2630	247300	25.7	26.5	135.0	37.1	
4DB3-2200-FSD	4DC3	-		460-3	2630	247300	32.1	32.5	180.0	45.5	
4DH3-2500-TSK	4DK3	-	4DH3R22MO-	208/230-3	3020	273000	72.1	82.2	428.0	115.0	
4DH3-2500-TSD	4DK3	-		460-3	3020	273000	36.1	41.1	214	57.5	
4DH3-2500-TSE	4DK3	-		575-3	3020	273000	28.8	34.4	172.0	48.1	
4DH3-2500-FSD	4DK3	-		460-3	3020	273000	36.1	40.6	206.0	56.8	
4DJ3-3000-TSK	4DR3	-	4DJ3R28M0-	208/230-3	3603	317900	88.8	94.0	470.0	131.6	
4DJ3-3000-TSD	4DR3	-		460-3	3603	317900	44.4	47.0	235.0	65.8	
4DJ3-3000-TSE	4DR3	-		575-3	3603	317900	35.5	39.3	200.0	55.0	
4DJ3-3000-FSD	4DR3	-		460-3	3603	317900	44.4	45.0	235.0	63.0	
6DB3-3000-TSK	6DW3	**6DY3**	6DB3R32M0-	208/230-3	4140	356400	96.8	105.0	565.0	147.0	
6DB3-3000-TSD	6DW3	**6DY3**		460-3	4140	356400	48.4	47.8	235.0	51.8	
6DB3-3000-TSE	6DW3	**6DY3**		575-3	4140	356400	19.4	40.0	230.0	56.0	
6DB3-3000-FSD	6DW3	**6DY3**		460-3	4140	356400	48.4	50.0	260.0	70.0	
6DH3-3500-TSK	6DK3	**6DP3**	6DH3R35M0-	208/230-3	4530	387200	107.5	107.0	565.0	150.0	
6DH3-3500-TSD	6DK3	**6DP3**		460-3	4530	387200	53.8	53.5	283.0	53.5	
6DH3-3500-TSE	6DK3	**6DP3**		575-3	4530	387200	43.0	42.5	230.0	59.5	
6DH3-3500-FSD	6DK3	**6DP3**		460-3	4530	387200	53.8	55.0	260.0	77.0	
6DG3-3500-TSN	6DM3	**6DN3**	6DG3R37M0-	230-3	4955	422100	116.8	125.0	594.0	175.0	
6DG3-3500-TSD	6DM3	**6DN3**		460-3	4955	422100	58.4	62.5	297.0	87.5	
6DG3-3500-TSE	6DM3	**6DN3**		575-3	4955	422100	46.7	46.0	245.0	64.4	
6DG3-3500-FSD	6DM3	**6DN3**		460-3	4955	422100	58.4	66.0	315.0	92.4	
6DG3-3500-FSU	6DM3	**6DN3**		200-3	4955	422100	134.3	135.0	650.0	189.0	
6DJ3-4000-TSN	6DR3	**6DS3**	6DJ3R40M0-	230-3	5404	466700	127.1	142.0	594.0	198.0	
6DJ3-4000-TSD	6DR3	**6DS3**		460-3	5404	466700	363.6	71.0	297.0	99.0	
6DJ3-4000-TSE	6DR3	**6DS3**		575-3	5404	466700	50.8	53.5	245.0	74.9	
6DJ3-4000-FSD	6DR3	**6DS3**		460-3	5404	467000	63.6	70.0	315.0	98.0	
6DJ3-4000-FSU	6DR3	**6DS3**		200-3	5404	467000	146.2	150.0	754.0	210.0	
8DP1-5000-TSK	8DP1	8DP1	8DP1R56M0-	208/230-3	6429	565700	164.8	180.0	1070.0	252.0	
8DP1-5000-TSD	8DP1	8DP1		460-3	6429	565700	82.4	90.0	535.0	126.0	
8DP1-5000-TSE	8DP1	8DP1		575-3	6429	565700	65.9	75.0	405.0	105.0	
8DP1-5000-FSD	8DP1	8DP1		460-3	6429	565700	82.4	91.0	510.0	127.0	
8DS1-6000-TSK	8DS1	8DS1	8DS1R67M0-	208/230-3	7609	644200	199.7	224.0	1070.0	314.0	
8DS1-6000-TSD	8DS1	8DS1		460-3	7609	644200	99.8	112.0	535.0	157.0	
8DS1-6000-TSE	8DS1	8DS1		575-3	7609	644200	79.9	80.0	405.0	112.0	
8DS1-6000-FSD	8DS1	8DS1		460-3	7609	644200	99.8	96.5	510.0	135.0	

REFRIGERATION DUTY COMPRESSORS

COPELAMETIC DISCUS - HFC-404A

2D, 3D, 4D & 6D
Low Temperature

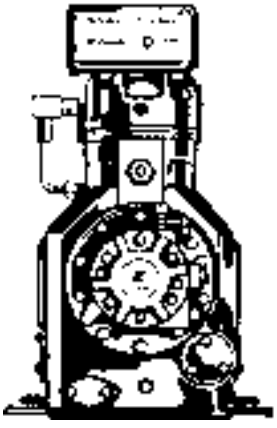
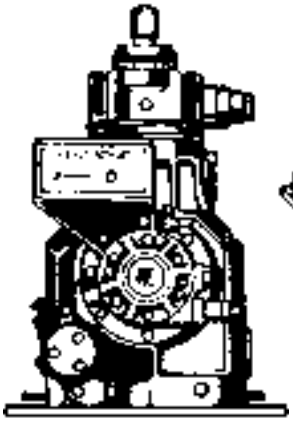
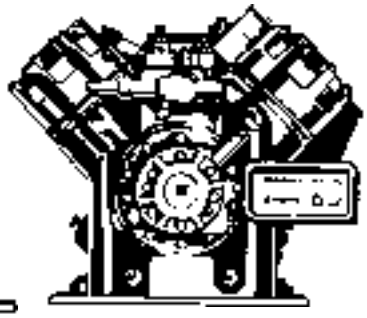
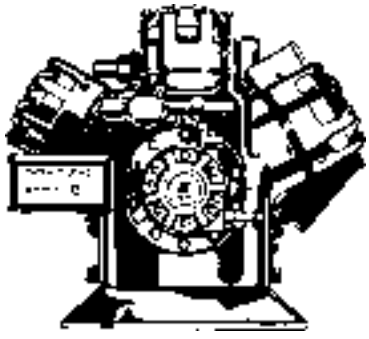

Standard Model Specs

Standard Model	Model With Unloading		CURRENT Model	Volts / Phase	CFH	Conditions (°F): Evap/Cond/ Return Gas/Liquid/Ambient		Amperage Ratings			LIST
	1 Bank	2 Bank				BTUH	Amps	RLA	LRA	MCC	
HFC-404A LOW TEMP						-25 / 105 / 65 / 105 / 95°F					
2DF3-030E-TFC	-	-	2DF3F16KE-	208/230-3	908	16300	12.0	16.8	102.0	22.4	
2DF3-030E-TFD	-	-		460-3	908	16300	6.0	8.1	52.0	11.1	
2DF3-030E-TFE	-	-		575-3	908	16300	4.8	6.7	41.0	9.4	
2DL3-040E-TFC	-	-	2DL3F20KE-	208/230-3	1008	19900	13.2	26.3	161.0	36.8	
2DL3-040E-TFD	-	-		460-3	1008	19900	6.6	10.2	60.0	14.3	
2DL3-040E-TFE	-	-		575-3	1008	19900	5.3	7.7	49.0	10.8	
2DA3-060E-TFC	-	-	2DA3F23KE-	20/230-3	1134	23100	14.6	28.8	161.0	40.3	
2DA3-060E-TFD	-	-		460-3	1134	23100	7.3	10.2	60.0	14.3	
2DA3-060E-TFE	-	-		575-3	1134	23100	5.8	9.1	49.0	12.7	
2DB3-060E-TFC	-	-	2DB3F25KE-	208/230-3	1190	24600	16.4	28.2	161.0	39.5	
2DB3-060E-TFD	-	-		460-3	1190	24600	8.2	13.3	80.0	18.6	
2DB3-060E-TFE	-	-		575-3	1190	24600	6.6	9.6	63.0	13.4	
3DA3A060E-TFC	3DHH	-	3DA3F28KE-	208/230-3	1371	27800	17.8	30.3	150.0	37.5	
3DA3A060E-TFD	3DHH	-		460-3	1371	27800	8.9	13.7	77.0	16.8	
3DA3A060E-TFE	3DHH	-		575-3	1371	27800	7.1	10.5	62.0	14.7	
3DB3A075E-TFC	3DJH	-	3DB3F33KE-	208/230-3	1615	33100	20.6	31.5	161.0	43.0	
3DB3A075E-TFD	3DJH	-		460-3	1615	33100	10.3	16.1	83.0	22.0	
3DB3A075E-TFE	3DJH	-		575-3	1615	33100	8.2	11.0	67.0	15.4	
3DF3A090E-TFC	3DGH	-	3DF3F40KE-	208/230-3	1913	40200	24.6	39.0	215.0	51.8	
3DF3A090E-TFD	3DGH	-		460-3	1913	40200	12.3	16.9	106.0	23.4	
3DF3A090E-TFE	3DGH	-		575-3	1913	40200	9.8	16.5	84.0	22.0	
3DS3A100E-TFC	3DRH	-	3DS3F46KE-	208/230-3	2127	45700	26.8	42.0	215.0	58.0	
3DS3A100E-TFD	3DRH	-		460-3	2127	45700	13.4	18.6	106.0	26.0	
3DS3A100E-TFE	3DRH	-		575-3	2127	45700	10.7	16.8	84.0	22.7	
4DA3A101E-TSK	4DE3	-	4DA3F47KE-	208/230-3	2386	47200	29.6	45.2	220.0	63.8	
4DA3A101E-TSK	4DE3	-		460-3	2386	47200	14.8	22.6	110.0	31.9	
4DA3A101E-TSE	4DE3	-		575-3	2386	47200	11.8	17.5	106.0	24.3	
4DL3A150E-TSK	4DP3	-	4DL3F63KE-	208/230-3	3018	63200	39.6	52.6	278.0	73.6	
4DL3A150E-FSD	4DP3	-		460-3	3018	63200	19.8	24.5	136.0	34.3	
4DL3A150E-TSK	4DP3	-		460-3	3018	63200	19.8	26.3	139.0	36.8	
4DL3A150E-TSE	4DP3	-		575-3	3018	63200	15.8	20.9	113.0	29.3	
6DL3A270E-TSK	6DC3	**6DD3**	6DL3F93KE-	208/230-3	4527	93100	59.2	80.8	450.0	113.0	
6DL3A270E-FSD	6DC3	**6DD3**		460-3	4527	93100	29.6	41.6	218.0	58.2	
6DL3A270E-TSD	6DC3	**6DD3**		460-3	4527	93100	29.6	40.4	225.0	56.5	
6DL3A270E-TSE	6DC3	**6DD3**		575-3	4527	93100	23.7	32.5	172.0	45.5	
6DT3A300E-TSK	6DE3	**6DF3**	6DT3F11ME-	208/230-3	5407	105000	69.2	95.6	470.0	133.8	
6DT3A300E-FSD	6DE3	**6DF3**		460-3	5407	105000	34.6	42.8	235.0	60.0	
6DT3A300E-TSK	6DE3	**6DF3**		460-3	5407	105000	34.6	47.8	235.0	66.9	
6DT3A300E-TSE	6DE3	**6DF3**		575-3	5407	105000	27.7	39.6	200.0	55.4	

REFRIGERATION DUTY COMPRESSORS

COPELAMETIC DISCUS - HFC-404A

2D, 3D, 4D & 6D
Medium Temperature

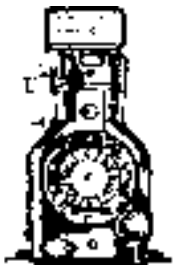
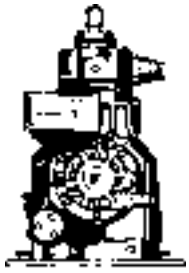

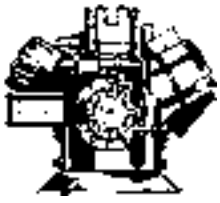

Standard Model Specs

Standard Model	Model With Unloading		CURRENT Model	Volts / Phase	CFH	Conditions (°F): Evap/Cond/ Return Gas/Liquid/Ambient		Amperage Ratings			LIST
	1 Bank	2 Bank				BTUH	Amps	RLA	LRA	MCC	
HFC-404A MED TEMP			**$15,023.00**			**20 / 120 / 65 / 120 / 95°F**					
2DC3-050E-TFC	-	-	2DC3R53KE-	208/230-3	716	34600	14.8	22.3	120.0	31.2	$13,361.00
2DC3-050E-TFD	-	-		460-3	716	34600	7.4	10.4	60.0	14.6	
2DC3-050E-TFE	-	-		575-3	716	34600	5.9	7.7	49.0	10.8	
2DD3-050E-TFC	-	-	2DD3R63KE-	208/230-3	823	41900	16.6	22.3	120.0	31.2	$13,512.00
2DD3-050E-TFD	-	-		460-3	823	41900	8.3	10.5	60.0	14.7	
2DD3-050E-TFE	-	-		575-3	823	41900	6.6	7.9	49.0	11.1	
2DL3-075E-TFC	-	-	2DL3R78KE-	208/230-3	1008	51800	21.0	31.6	169.0	44.2	$13,603.00
2DL3-075E-TFD	-	-		460-3	1008	51800	10.5	13.8	85.0	19.4	
2DL3-075E-TFE	-	-		575-3	1008	51800	8.4	13.2	67.0	18.5	
2DA3-075E-TFC	-	-	2DA3R89KE-	208/230-3	1134	60100	23.4	32.0	169.0	44.8	$14,208.00
2DA3-075E-TFD	-	-		460-3	1134	60100	11.7	14.1	85.0	19.7	
2DA3-075E-TFE	-	-		575-3	1134	60100	9.4	13.3	67.0	18.6	
3DA3A075E-TFC	3DEH	-	3DA3R10ME-	208/230-3	1371	71200	28.4	41.0	215.0	57.4	$15,023.00
3DA3A075E-TFD	3DEH	-		460-3	1371	71200	14.2	20.0	106.0	28.0	
3DA3A075E-TFE	3DEH	-		575-3	1371	71200	11.4	16.5	84.0	23.0	
3DB3A100E-TFC	3DPH	-	3DB3R12ME-	208/230-3	1615	84800	33.2	43.6	215.0	61.0	$17,857.00
3DB3A100E-TFD	3DPH	-		460-3	1615	84800	16.6	20.0	106.0	28.0	
3DB3A100E-TFE	3DPH	-		575-3	1615	84800	13.3	16.5	84.0	23.1	
3DF3-120E-TFC	3DKH	-	3DF3R15ME-	208/230-3	1913	104600	10.6	48.2	275.0	67.4	$17,857.00
3DF3-120E-TFD	3DKH	-		460-3	1913	104600	21.2	23.6	138.0	33.0	
3DS3A150E-TFC	3DTH	-	3DS3R17ME-	208/230-3	2127	116000	46.8	59.6	275.0	83.5	$17,440.00
3DS3A150E-TFD	3DTH	-		460-3	2127	116000	23.4	29.0	138.0	40.6	
3DS3A150E-TFE	3DTH	-		575-3	2127	116000	18.7	23.6	110.0	33.0	
4DA3A200E-TSK	4DE3	-	4DA3R18ME-	208/230-3	2386	120000	48.8	66.0	308.0	82.2	$19,187.00
4DA3A200E-FSD	4DE3	-		460-3	2386	120000	24.4	33.6	173.0	45.0	
4DA3A200E-TSK	4DE3	-		460-3	2386	120000	24.4	33.0	154.0	41.1	
4DA3A200E-TSE	4DE3	-		575-3	2386	120000	19.5	24.7	135.0	33.3	
4DH3A250E-TSK	4DK3	-	4DH3R22ME-	208/230-3	3018	156000	66.0	82.2	428.0	104.2	$22,994.00
4DH3A250E-FSD	4DK3	-		460-3	3018	156000	33.0	40.6	206.0	56.0	
4DH3A250E-TSK	4DK3	-		460-3	3018	156000	33.0	41.1	214.0	52.1	
4DH3A250E-TSE	4DK3	-		575-3	3018	156000	26.4	34.4	172.0	46.6	
4DJ3A300E-TSK	4DR3	-	4DJ3R28ME-	208/230-3	3605	187000	78.6	94.0	470.0	117.6	$25,440.00
4DJ3A300E-FSD	4DR3	-		460-3	3605	187000	39.3	45.0	235.0	60.5	
4DJ3A300E-TSK	4DR3	-		460-3	3605	187000	39.3	47.0	235.0	58.8	
4DJ3A300E-TSE	4DR3	-		575-3	3605	187000	31.4	39.3	200.0	54.0	
6DH3A350E-TSK	6DK3	**6DP3**	6DH3R35ME-	208/230-3	4527	236000	95.6	107.0	565.0	150.0	$31,795.00
6DH3A350E-FSD	6DK3	**6DP3**		460-3	4527	236000	47.8	55.0	260.0	75.0	
6DH3A350E-TSK	6DK3	**6DP3**		460-3	4527	236000	47.8	53.5	283.0	75.0	
6DH3A350E-TSE	6DK3	**6DP3**		575-3	4527	236000	38.2	42.5	230.0	57.0	
6DG3A350E-FSU	6DM3	**6DN3**	6DG3R37ME-	200-3	4957	257000	122.0	135.0	650.0	185.0	$31,795.00
6DG3A350E-TSN	6DM3	**6DN3**		230-3	4957	257000	106.0	125.0	594.0	153.6	
6DG3A350E-FSD	6DM3	**6DN3**		460-3	4957	257000	53.1	66.0	315.0	92.4	
6DG3A350E-TSN	6DM3	**6DN3**		460-3	4957	257000	53.1	62.5	297.0	76.8	
6DG3A350E-TSE	6DM3	**6DN3**		575-3	4957	257000	42.5	46.0	245.0	64.4	
6DJ3A400E-FSU	6DR3	**6DS3**	6DJ3R40ME-	200-3	5407	278000	132.0	150.	754.0	208.0	$36,322.00
6DJ3A400E-TSN	6DR3	**6DS3**		230-3	5407	278000	115.0	142.0	594.0	158.8	
6DJ3A400E-FSD	6DR3	**6DS3**		460-3	5407	278000	57.5	70.0	315.0	95.0	
6DJ3A400E-TSN	6DR3	**6DS3**		460-3	5407	278000	57.5	71.0	297.0	79.4	
6DJ3A400E-TSE	6DR3	**6DS3**		575-3	5407	278000	46.0	53.5	245.0	72.0	

BITZER ECOLINE COMPRESSORS

ECOLINE Semi-Hermetic Reciprocating Compressors

Nomenclature Explained:				
4	NES-	14-	2NU-	1Y
Number of Cylinders: C1/C2 = 2; C3/C4 = 4; B5 = 4; B6 = 6				
4	NES-	14-	2NU-	1Y
Displacement Code / Ecoline Designator (E) / and optional (S) for slinger variants-note no digit for pump versions				
4	NES-	14-	2NU-	1Y
Horsepower – up to 3 digits; 0.5 HP to 100 HP (tandems)				
4	NES-	14-	2NU-	1Y
Voltage code – 3 digits always 2DU-208/230 3 Phase 2NU-208/230/ 460 3 Phase 5PU-575V 3 Phase				
4	NES-	14-	2NU-	1Y
Configuration suffix: 3 digits; head/oil/other (optional)				

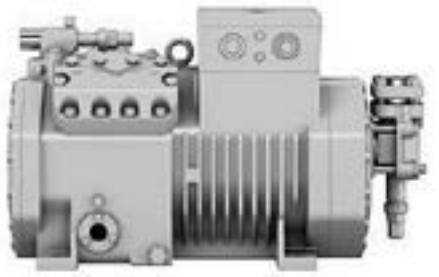

R513A Performance data
based on 20 °F suction superheat, 120°F SDT, 0F Subcooling 65F Return Gas Temp

SST 45F		SST 25F		SST -15F		SST -25F	
Model Number	Comp Capacity	Model Number	Comp Capacity	Model Number	Comp Capacity	Model Number	Comp Capacity
2KES-05	9.15	2KES-05	5.62	2KES-05	N/A	2KES-05	N/A
2JES-07	11.71	2JES-07	7.19	2JES-07	N/A	2JES-07	N/A
2HES-1	15.45	2HES-1	9.75	2HES-1	N/A	2HES-1	N/A
2HES-2	15.38	2HES-2	9.72	2HES-2	N/A	2HES-2	N/A
2GES-2	18.05	2GES-2	11.52	2GES-2	N/A	2GES-2	N/A
2FES-2	22.35	2FES-2	14.20	2FES-2	N/A	2FES-2	N/A
2FES-3	22.26	2FES-3	14.16	2FES-3	N/A	2FES-3	N/A
2EES-2	28.21	2EES-2	17.73	2EES-2	N/A	2EES-2	N/A
2EES-3	28.21	2EES-3	17.73	2EES-3	N/A	2EES-3	N/A
2DES-2	33.66	2DES-2	21.26	2DES-2	N/A	2DES-2	N/A
2DES-3	33.66	2DES-3	21.26	2DES-3	N/A	2DES-3	N/A
2CES-3	41.36	2CES-3	26.32	2CES-3	N/A	2CES-3	N/A
2CES-4	41.36	2CES-4	26.32	2CES-4	N/A	2CES-4	N/A
4FES-3	44.13	4FES-3	27.30	4FES-3	N/A	4FES-3	N/A
4FES-5	44.13	4FES-5	27.30	4FES-5	N/A	4FES-5	N/A
4EES-4	56.04	4EES-4	35.74	4EES-4	N/A	4EES-4	N/A
4EES-6	56.04	4EES-6	35.74	4EES-6	N/A	4EES-6	N/A
4DES-5	66.88	4DES-5	41.80	4DES-5	N/A	4DES-5	N/A
4DES-7	66.88	4DES-7	41.80	4DES-7	N/A	4DES-7	N/A
4CES-6	82.16	4CES-6	51.78	4CES-6	N/A	4CES-6	N/A
4CES-9	82.16	4CES-9	51.78	4CES-9	N/A	4CES-9	N/A
4VES-7	87.16	4VES-7	54.35	4VES-7	N/A	4VES-7	N/A
4VES-10	85.81	4VES-10	53.17	4VES-10	N/A	4VES-10	N/A
4TES-9	105.11	4TES-9	65.94	4TES-9	N/A	4TES-9	N/A
4TES-12	103.54	4TES-12	64.61	4TES-12	N/A	4TES-12	N/A
4PES-12	120.67	4PES-12	74.70	4PES-12	N/A	4PES-12	N/A
4PES-15	118.75	4PES-15	73.23	4PES-15	N/A	4PES-15	N/A
4NES-14	142.01	4NES-14	88.75	4NES-14	N/A	4NES-14	N/A
4NES-20	141.16	4NES-20	88.16	4NES-20	N/A	4NES-20	N/A
4JE-15	160.51	4JE-15	102.39	4JE-15	N/A	4JE-15	N/A
4JE-22	158.10	4JE-22	100.14	4JE-22	N/A	4JE-22	N/A
4HE-18	189.19	4HE-18	121.19	4HE-18	N/A	4HE-18	N/A
4HE-25	187.85	4HE-25	119.55	4HE-25	N/A	4HE-25	N/A
4GE-23	213.37	4GE-23	135.44	4GE-23	N/A	4GE-23	N/A
4GE-30	219.16	4GE-30	139,65	4GE-30	N/A	4GE-30	N/A
4FE-28	261.25	4FE-28	168.02	4FE-28	N/A	4FE-28	N/A
4FE-35	257.15	4FE-35	164.10	4FE-35	N/A	4FE-35	N/A
6JE-25	237.92	6JE-25	150.01	6JE-25	N/A	6JE-25	N/A
6JE-33	240.93	6JE-33	151.42	6JE-33	N/A	6JE-33	N/A
6HE-28	280.22	6HE-28	178.06	6HE-28	N/A	6HE-28	N/A
6HE-35	277.13	6HE-35	175.08	6HE-35	N/A	6HE-35	N/A
6GE-34	319.52	6GE-34	204.48	6GE-34	N/A	6GE-34	N/A
6GE-40	320.28	6GE-40	205.03	6GE-40	N/A	6GE-40	N/A
6FE-44	384.83	6FE-44	247.16	6FE-44	N/A	6FE-44	N/A
6FE-50	378.59	6FE-50	241.26	6FE-50	N/A	6FE-50	N/A

BITZER ECOLINE COMPRESSORS

ECOLINE Semi-Hermetic Reciprocating Compressors

Nomenclature Explained:				
4	NES-	14-	2NU-	1Y
Number of Cylinders: C1/C2 = 2; C3/C4 = 4; B5 = 4; B6 = 6				
4	NES-	14-	2NU-	1Y
Displacement Code / Ecoline Designator (E) / and optional (S) for slinger variants-note no digit for pump versions				
4	NES-	14-	2NU-	1Y
Horsepower – up to 3 digits; 0.5 HP to 100 HP (tandems)				
4	NES-	14-	2NU-	1Y
Voltage code – 3 digits always 2DU-208/230 3 Phase 2NU-208/230/ 460 3 Phase 5PU-575V 3 Phase				
4	NES-	14-	2NU-	1Y
Configuration suffix: 3 digits; head/oil/other (optional)				

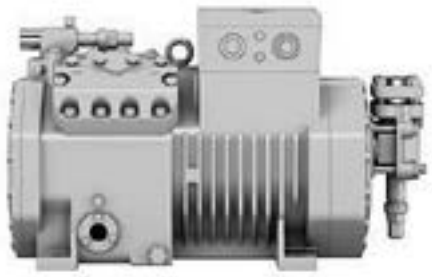

R407C Performance data
based on 20 °F suction superheat, 120°F SDT, 0F Subcooling 65F Return Gas Temp

SST 45F		SST 25F		SST -5F		SST -25F	
Model Number	Comp Capacity kBtu/hr	Model Number	Comp Capacity kBtu/hr	Model Number	Comp Capacity kBtu/hr	Model Number	Comp Capacity kBtu/hr
2KES-05	14.45	2KES-05	9.10	2KES-05	3.93	2KES-05	N/A
2JES-07	19.05	2JES-07	12.13	2JES-07	5.46	2JES-07	N/A
2HES-1	N/A	2HES-1	N/A	2HES-1	12.16	2HES-1	N/A
2HES-2	24.11	2HES-2	15.48	2HES-2	7.10	2HES-2	N/A
2GES-2	28.25	2GES-2	18.19	2GES-2	8.40	2GES-2	N/A
2FES-2	N/A	2FES-2	N/A	2FES-2	10.57	2FES-2	N/A
2FES-3	35.53	2FES-3	22.87	2FES-3	10.57	2FES-3	N/A
2EES-2	N/A	2EES-2	N/A	2EES-2	20.08	2EES-2	N/A
2EES-3	40.81	2EES-3	25.83	2EES-3	11.36	2EES-3	N/A
2DES-2	N/A	2DES-2	N/A	2DES-2	13.26	2DES-2	N/A
2DES-3	47.03	2DES-3	29.85	2DES-3	13.26	2DES-3	N/A
2CES-3	N/A	2CES-3	N/A	2CES-3	17.04	2CES-3	N/A
2CES-4	59.24	2CES-4	37.77	2CES-4	17.04	2CES-4	N/A
4FES-3	N/A	4FES-3	N/A	4FES-3	16.95	4FES-3	N/A
4FES-5	63.43	4FES-5	39.68	4FES-5	16.95	4FES-5	N/A
4EES-4	N/A	4EES-4	N/A	4EES-4	21.33	4EES-4	N/A
4EES-6	79.84	4EES-6	49.95	4EES-6	21.33	4EES-6	N/A
4DES-5	N/A	4DES-5	N/A	4DES-5	25.21	4DES-5	N/A
4DES-7	92.39	4DES-7	58.09	4DES-7	25.21	4DES-7	N/A
4CES-6	N/A	4CES-6	N/A	4CES-6	32.91	4CES-6	N/A
4CES-9	117.02	4CES-9	74.13	4CES-9	32.91	4CES-9	N/A
4VES-7	N/A	4VES-7	N/A	4VES-7	32.83	4VES-7	N/A
4VES-10	122.84	4VES-10	76.95	4VES-10	32.83	4VES-10	N/A
4TES-9	N/A	4TES-9	N/A	4TES-9	40.76	4TES-9	N/A
4TES-12	148.19	4TES-12	93.44	4TES-12	40.76	4TES-12	N/A
4PES-12	N/A	4PES-12	N/A	4PES-12	44.57	4PES-12	N/A
4PES-15	170.02	4PES-15	106.04	4PES-15	44.57	4PES-15	N/A
4NES-14	N/A	4NES-14	N/A	4NES-14	54.55	4NES-14	N/A
4NES-20	200.25	4NES-20	125.84	4NES-20	54.27	4NES-20	N/A
4JE-15	N/A	4JE-15	N/A	4JE-15	60.15	4JE-15	N/A
4JE-22	225.54	4JE-22	140.34	4JE-22	57.42	4JE-22	N/A
4HE-18	N/A	4HE-18	N/A	4HE-18	73.17	4HE-18	N/A
4HE-25	266.11	4HE-25	167.14	4HE-25	70.44	4HE-25	N/A
4GE-23	N/A	4GE-23	N/A	4GE-23	84.95	4GE-23	N/A
4GE-30	312.52	4GE-30	198.71	4GE-30	86.87	4GE-30	N/A
4FE-28	N/A	4FE-28	N/A	4FE-28	103.84	4FE-28	N/A
4FE-35	367.72	4FE-35	231.84	4FE-35	98.85	4FE-35	N/A
6JE-25	N/A	6JE-25	N/A	6JE-25	90.33	6JE-25	N/A
6JE-33	327.04	6JE-33	204.65	6JE-33	87.62	6JE-33	N/A
6HE-28	N/A	6HE-28	N/A	6HE-28	109.77	6HE-28	N/A
6HE-35	386.06	6HE-35	243.68	6HE-35	107.29	6HE-35	N/A
6GE-34	N/A	6GE-34	N/A	6GE-34	127.43	6GE-34	N/A
6GE-40	453.68	6GE-40	289.59	6GE-40	132.01	6GE-40	N/A
6FE-44	N/A	6FE-44	N/A	6FE-44	155.70	6FE-44	N/A
6FE-50	533.59	6FE-50	337.97	6FE-50	150.44	6FE-50	N/A

BITZER ECOLINE COMPRESSORS

ECOLINE Semi-Hermetic Reciprocating Compressors

Nomenclature Explained:				
4	NES-	14-	2NU-	1Y
Number of Cylinders: C1/C2 = 2; C3/C4 = 4; B5 = 4; B6 = 6				
4	NES-	14-	2NU-	1Y
Displacement Code / Ecoline Designator (E) / and optional (S) for slinger variants-note no digit for pump versions				
4	NES-	14-	2NU-	1Y
Horsepower – up to 3 digits; 0.5 HP to 100 HP (tandems)				
4	NES-	14-	2NU-	1Y
Voltage code – 3 digits always 2DU-208/230 3 Phase 2NU-208/230/ 460 3 Phase 5PU-575V 3 Phase				
4	NES-	14-	2NU-	1Y
Configuration suffix: 3 digits; head/oil/other (optional)				

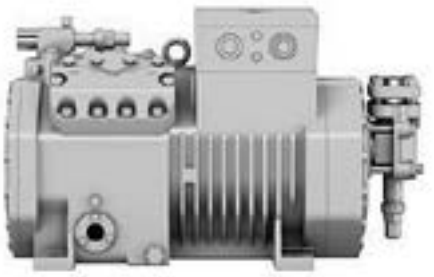

R448 Performance data
based on 20 °F suction superheat, 120°F SDT, 0F Subcooling 65F Return Gas Temp

SST 45F		SST 25F		SST -5F		SST -25F	
Model Number	Comp Capacity kBtu/hr	Model Number	Comp Capacity kBtu/hr	Model Number	Comp Capacity kBtu/hr	Model Number	Comp Capacity kBtu/hr
2KES-05	13.58	2KES-05	8.12	2KES-05	3.03	2KES-05	1.10
2JES-07	18.00	2JES-07	10.91	2JES-07	4.27	2JES-07	1.74
2HES-1	N/A	2HES-1	13.98	2HES-1	5.61	2HES-1	2.38
2HES-2	22.87	2HES-2	13.98	2HES-2	5.61	2HES-2	2.38
2GES-2	26.86	2GES-2	16.48	2GES-2	6.68	2GES-2	2.89
2FES-2	N/A	2FES-2	20.84	2FES-2	8.49	2FES-2	3.70
2FES-3	33.92	2FES-3	20.84	2FES-3	8.49	2FES-3	3.70
2EES-2	N/A	2EES-2	26.41	2EES-2	10.99	2EES-2	5.59
2EES-3	42.84	2EES-3	26.41	2EES-3	10.99	2EES-3	5.59
2DES-2	N/A	2DES-2	30.67	2DES-2	12.94	2DES-2	6.12
2DES-3	49.58	2DES-3	30.67	2DES-3	12.94	2DES-3	6.12
2CES-3	N/A	2CES-3	39.05	2CES-3	16.19	2CES-3	8.26
2CES-4	62.76	2CES-4	39.05	2CES-4	16.19	2CES-4	8.26
4FES-3	N/A	4FES-3	42.86	4FES-3	18.25	4FES-3	8.88
4FES-5	69.23	4FES-5	42.86	4FES-5	18.25	4FES-5	8.88
4EES-4	N/A	4EES-4	53.72	4EES-4	22.77	4EES-4	11.00
4EES-6	86.99	4EES-6	53.72	4EES-6	22.77	4EES-6	11.00
4DES-5	N/A	4DES-5	61.28	4DES-5	25.85	4DES-5	12.40
4DES-7	99.42	4DES-7	61.28	4DES-7	25.85	4DES-7	12.40
4CES-6	N/A	4CES-6	78.07	4CES-6	33.62	4CES-6	16.67
4CES-9	125.78	4CES-9	78.07	4CES-9	33.62	4CES-9	16.67
4VES-7	N/A	4VES-7	80.45	4VES-7	32.74	4VES-7	14.96
4VES-10	133.22	4VES-10	80.45	4VES-10	32.74	4VES-10	14.96
4TES-9	N/A	4TES-9	97.80	4TES-9	40.77	4TES-9	19.37
4TES-12	159.63	4TES-12	97.80	4TES-12	40.77	4TES-12	19.37
4PES-12	N/A	4PES-12	111.22	4PES-12	44.79	4PES-12	20.01
4PES-15	183.16	4PES-15	110.74	4PES-15	44.46	4PES-15	19.92
4NES-14	N/A	4NES-14	133.03	4NES-14	55.34	4NES-14	26.05
4NES-20	217.78	4NES-20	133.45	4NES-20	55.83	4NES-20	26.78
4JE-15	N/A	4JE-15	154.03	4JE-15	66.54	4JE-15	32.12
4JE-22	241.44	4JE-22	149.75	4JE-22	62.87	4JE-22	28.95
4HE-18	N/A	4HE-18	180.01	4HE-18	79.36	4HE-18	39.61
4HE-25	282.23	4HE-25	176.78	4HE-25	76.52	4HE-25	37.15
4GE-23	N/A	4GE-23	208.31	4GE-23	93.73	4GE-23	48.40
4GE-30	322.50	4GE-30	202.72	4GE-30	88.87	4GE-30	44.12
4FE-28	N/A	4FE-28	246.32	4FE-28	112.34	4FE-28	57.44
4FE-35	381.64	4FE-35	243.94	4FE-35	110.27	4FE-35	55.62
6JE-25	N/A	6JE-25	229.85	6JE-25	99.24	6JE-25	48.24
6JE-33	359.57	6JE-33	222.22	6JE-33	92.69	6JE-33	42.51
6HE-28	N/A	6HE-28	265.02	6HE-28	116.89	6HE-28	58.25
6HE-35	414.92	6HE-35	260.10	6HE-35	112.65	6HE-35	54.53
6GE-34	N/A	6GE-34	308.52	6GE-34	141.76	6GE-34	74.46
6GE-40	467.48	6GE-40	295.66	6GE-40	130.66	6GE-40	64.63
6FE-44	N/A	6FE-44	369.48	6FE-44	168.51	6FE-44	86.16
6FE-50	566.61	6FE-50	360.46	6FE-50	160.67	6FE-50	79.28

BITZER COMPACT SCREW COMPRESSORS

CSH Series Compact Screw Compressors



- Adjustment of the internal volume ratio (under full- and part-load) based on the extended range of applications
- Reduction of internal flow losses
- Optimisation of the oil management system
- Dual capacity control: switch between 4-stage and seamless capacity

R134A STANDARD (Economized info on request)

Performance data 60 Hz based on 20°F suction superheat, 15°F liquid subcooling

Compressor Model Number	Cond. temp. °F	Cooling capacity [kBTUH] Evaporation temperature °F							
		55	45	35	25	20	15	10	5
CSH6553-35Y	90	561	458	369	294	261	231	203	177
	110	504	408	326	256	225	197	171	148
	130	436	349	275	212	185	159	136	115
CSH6563-40Y	90	700	569	459	366	325	287	253	222
	110	625	506	405	320	283	249	217	189
	130	542	436	346	270	236	206	177	151
CSH6583-50Y	90	810	660	533	425	377	334	294	257
	110	723	586	469	371	328	288	252	219
	130	626	502	398	311	273	238	206	178
CSH6593-60Y	90	913	745	601	479	426	376	331	290
	110	815	661	529	418	370	325	284	247
	130	706	567	449	351	308	269	233	201
CSH7553-50Y	90	816	658	526	414	366	322	281	245
	110	725	581	460	359	315	275	239	207
	130	620	492	385	297	259	224	193	165
CSH7563-60Y	90	960	775	619	488	431	379	332	289
	110	854	684	542	423	371	325	282	244
	130	731	580	455	351	306	265	229	196
CSH7573-70Y	90	1102	890	711	561	495	436	382	332
	110	981	786	623	486	427	373	325	281
	130	840	667	523	403	352	305	264	226
CSH7583-80Y	90	1232	1003	808	644	573	507	447	393
	110	1118	903	722	569	503	442	387	337
	130	975	780	616	479	420	366	317	272
CSH7593-90Y	90	1403	1142	921	734	652	578	510	448
	110	1273	1029	822	648	573	504	441	384
	130	1111	889	702	546	478	417	361	310
CSH8553-80Y	90	1299	1058	852	679	603	534	471	413
	110	1173	948	757	596	526	462	404	350
	130	1033	826	652	505	442	383	331	283
CSH8563-90Y	90	1496	1218	982	783	695	615	542	476
	110	1351	1092	872	687	607	533	465	404
	130	1190	952	752	583	509	442	382	326
CSH8573-110Y	90	1767	1436	1157	921	818	724	639	561
	110	1596	1289	1029	812	717	631	552	481
	130	1379	1106	876	684	600	524	455	393
CSH8583-125Y	90	1957	1593	1284	1024	910	805	710	624
	110	1753	1418	1135	897	793	698	612	533
	130	1528	1227	973	760	667	583	506	436

R134A STANDARD (Economized info on request)

Performance data 60 Hz based on 20°F suction superheat, 15°F liquid subcooling

Compressor Model Number	Cond. temp. °F	Cooling capacity [kBTUH] Evaporation temperature °F							
		55	45	35	25	20	15	10	5
CSH8593-140Y	90	2228	1813	1462	1165	1035	917	809	710
	110	1995	1614	1292	1021	903	795	696	607
	130	1739	1397	1108	865	760	663	576	497
CSH9553-180Y	90	2241	1830	1479	1181	1050	929	817	715
	110	2012	1632	1307	1032	910	798	695	600
	130	1746	1403	1111	864	755	655	563	478
CSH9563-160Y	90	2630	2147	1736	1387	1232	1091	960	840
	110	2362	1916	1535	1212	1070	938	818	706
	130	2051	1649	1307	1017	889	771	664	565
CSH9573-180Y	90	3048	2476	1991	1584	1407	1245	1098	964
	110	2775	2238	1786	1407	1243	1093	958	836
	130	2407	1929	1528	1194	1049	918	799	692
CSH9583-210Y	90	3430	2802	2269	1818	1621	1440	1275	1125
	110	3100	2519	2026	1610	1428	1261	1110	971
	130	2737	2206	1757	1380	1215	1064	927	803
CSH9593-240Y	90	3897	3184	2578	2066	1842	1637	1449	1278
	110	3523	2862	2302	1830	1623	1434	1261	1104
	130	3110	2507	1997	1568	1381	1210	1054	913
CSH95103-280Y	90	4224	3445	2784	2226	1982	1758	1555	1369
	110	3816	3093	2480	1965	1739	1534	1346	1176
	130	3361	2698	2139	1669	1464	1278	1108	955

** Performance data for individual input data see BITZER Software.*

BITZER COMPACT SCREW COMPRESSORS

CSH Series Compact Screw Compressors



- Adjustment of the internal volume ratio (under full- and part-load) based on the extended range of applications
- Reduction of internal flow losses
- Optimisation of the oil management system
- Dual capacity control: switch between 4-stage and seamless capacity

R22* STANDARD (Economized info on request)

Performance data 60 Hz based on 20°F suction superheat, 15°F liquid subcooling

Compressor Type	Cond. temp. °F	Cooling capacity [kBTUH] Evaporation temperature °F							
		50	40	35	30	25	20	10	0
CSH6553-50	90		583	530	480	434	390	313	247
	110	627	518	468	422	380	340	269	208
	130	555	453	408	365	326	290	225	170
CSH6563-60	90		731	664	602	544	490	393	310
	110	787	650	588	530	477	427	338	262
	130	697	569	512	459	409	364	282	213
CSH7553-70	90		854	777	705	638	575	462	363
	110	916	758	687	620	558	500	396	306
	130	787	641	576	516	460	409	319	243
CSH7563-80	90		998	908	824	746	673	541	426
	110	1061	878	796	719	648	581	461	357
	130	903	737	663	594	531	472	368	282
CSH7573-90	90		1184	1080	983	892	806	652	516
	110	1268	1056	960	870	786	708	566	440
	130	1099	903	816	734	658	588	462	355
CSH7583-100	90		1317	1196	1083	978	881	707	559
	110	1410	1166	1056	954	859	771	615	481
	130	1224	1004	906	815	730	653	515	400
CSH7593-110	90		1502	1364	1235	1116	1004	806	636
	110	1609	1329	1204	1087	978	878	699	546
	130	1393	1142	1030	926	830	741	585	454
CSH8553-110	90		1433	1300	1176	1061	954	762	599
	110	1530	1261	1141	1028	924	827	655	507
	130	1305	1068	962	864	772	687	536	408
CSH8563-125	90		1634	1482	1340	1209	1087	869	682
	110	1744	1438	1300	1172	1053	943	746	578
	130	1487	1218	1097	984	880	783	611	465
CSH8573-140	90		1873	1716	1568	1430	1300	1062	849
	110	2027	1696	1545	1404	1272	1147	920	718
	130	1780	1456	1311	1176	1051	935	729	553
CSH8583-160	90		2104	1923	1754	1596	1447	1175	933
	110	2284	1900	1726	1564	1412	1269	1010	781
	130	2011	1637	1470	1315	1171	1038	802	603

Performance data for individual input data see BITZER Software.
** **For operation with R22 the oil B320H is required** Additional cooling: Liquid injection or external oil cooling*

R22* STANDARD (Economized info on request)

Performance data 60 Hz based on 20°F suction superheat, 15°F liquid subcooling

Compressor Type	Cond. temp. °F	Cooling capacity [kBTUH] Evaporation temperature °F							
		50	40	35	30	25	20	10	0
CSH8593-180	90		2446	2236	2039	1855	1682	1367	1086
	110	2658	2211	2009	1820	1643	1478	1177	912
	130	2348	1912	1716	1535	1367	1212	937	706
CSH9553-180	90		2483	2253	2039	1839	1653	1318	1029
	110	2710	2232	2017	1816	1630	1456	1144	875
	130	2379	1944	1748	1565	1396	1238	955	710
CSH9563-210	90		2874	2608	2359	2129	1915	1534	1210
	110	3150	2596	2348	2117	1902	1704	1350	1049
	130	2779	2273	2046	1836	1640	1459	1138	864
CSH9573-240	90		3336	3025	2736	2468	2220	1778	1402
	110	3610	2981	2699	2437	2194	1969	1568	1229
	130	3168	2608	2356	2123	1907	1707	1351	1049
CSH9583-280	90		3677	3345	3038	2754	2491	2027	1639
	110	4047	3360	3053	2769	2505	2263	1835	1477
	130	3619	2992	2710	2448	2205	1979	1577	1234
CSH9593-300	90		4190	3821	3478	3160	2866	2345	1905
	110	4575	3806	3462	3143	2847	2573	2088	1680
	130	4087	3379	3061	2765	2490	2235	1781	1393

Performance data for individual input data see BITZER Software.
** **For operation with R22 the oil B320H is required** Additional cooling: Liquid injection or external oil cooling*

BITZER SCREW COMPRESSORS

HSK and HSN Series Semi-Hermetic Screw Compressors

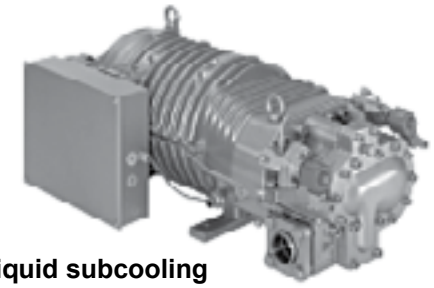

- Optimised for parallel operation
- High system output
- Optimal capacity adjustment and minimal energy requirements under full- and part-load
- Combination of various compressor sizes
- Robust design
- Large bearings
- Large built-in motor

R134A performance data 60 Hz based on 20°F suction superheat, without liquid subcooling
High- Medium temperature range

Compressor Model Number	Cond. temp. °F	Cooling capacity [kBTUH] Evaporation temperature °F												
		60	55	50	45	40	35	30	25	20	15	10	5	0
HSK8551-80	110		1,095	986	886	794	709	631	560	495	436	382	334	289
	120		1,022	919	824	736	656	582	515	454	398	347	301	259
	130		947	849	759	676	600	531	468	410	358	310	267	
	140		868	776	691	614	543	478	419	365	316	272		
HSK8551-110	110	1,213	1,095	986	886	794	709	631	560	495	436	382	334	289
	120	1,135	1,022	919	824	736	656	582	515	454	398	347	301	259
	130	1,053	947	849	759	676	600	531	468	410	358	310	267	
	140	968	868	776	691	614	543	478	419	365	316	272		
HSK8561-90	110		1,248	1,124	1,010	905	809	721	640	567	500	439	384	334
	120		1,165	1,048	940	841	750	667	591	522	459	402	350	303
	130		1,078	968	866	773	688	610	539	475	416	362	314	
	140		986	884	789	703	623	551	485	425	370	321		
HSK8561-125	110	1,383	1,249	1,125	1,010	906	809	721	640	567	500	439	384	334
	120	1,293	1,165	1,048	940	841	750	667	591	522	459	402	350	303
	130	1,198	1,078	968	866	773	688	610	539	475	416	362	314	
	140	1,098	986	884	789	703	623	551	485	425	370	321		
HSK8571-110	110		1,428	1,288	1,160	1,042	933	834	743	660	584	516	453	397
	120		1,336	1,204	1,082	971	868	774	688	610	539	474	415	362
	130		1,241	1,117	1,002	897	800	712	632	558	491	431	376	
	140		1,144	1,027	920	821	731	649	574	505	443	387		
HSK8571-140	110	1,579	1,428	1,288	1,160	1,042	933	834	743	660	584	516	453	397
	120	1,480	1,336	1,204	1,082	971	868	774	688	610	539	474	415	362
	130	1,377	1,242	1,117	1,002	897	800	712	632	558	491	431	376	
	140	1,271	1,144	1,027	920	821	731	649	574	505	443	387		

For operation with R134a polyol-ester oil (BSE170) is required.
For ranges in which oil cooling becomes necessary and for oil cooler capacity see BITZER Software.

R404A, R507A Performance data 60 Hz based on 20 °F suction superheat, without liquid subcooling
High- Medium temperature range normal

Compressor Model Number	Cond. temp. °F	Cooling capacity [kBTUH] Evaporation temperature °F									
		45	40	35	30	25	20	15	10	5	0
HSK8551-110	90	1,628	1,474	1,332	1,201	1,080	969	867	774	688	610
	110	1,377	1,242	1,117	1,003	897	801	712	631	557	490
	130	1,100	986	880	783	695	614	541	474	413	358
HSK8561-125	90	1,848	1,674	1,513	1,365	1,229	1,104	989	884	787	699
	110	1,564	1,411	1,270	1,141	1,022	913	814	723	640	564
	130	1,244	1,116	998	891	792	703	621	547	480	419
HSK8571-140	90	2,094	1,899	1,719	1,553	1,400	1,260	1,130	1,012	903	804
	110	1,773	1,604	1,447	1,303	1,170	1,048	937	834	741	656
	130	1,418	1,276	1,145	1,025	915	815	722	638	562	493

BITZER SCREW COMPRESSORS

HSK and HSN Series Semi-Hermetic Screw Compressors

- Optimised for parallel operation
- High system output
- Optimal capacity adjustment and minimal energy requirements under full- and part-load
- Combination of various compressor sizes
- Robust design
- Large bearings
- Large built-in motor

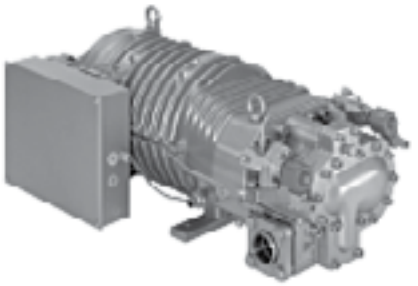

R404A, R507A performance data 60 Hz based on 20°F suction superheat, without liquid subcooling
Low temperature range Economiser operation

Compressor Model Number	Cond. temp. °F	Cooling capacity [kBTUH] Evaporation temperature °F											
		5	0	-5	-10	-15	-20	-25	-30	-35	-40	-45	-50
HSN8571-125	90	1,065	968	878	794	716	645	579	517	461	409	361	317
	110	950	862	781	705	635	570	510	454	403	355	311	270
	120	881	799	723	652	586	524	468	415	366	321	278	239
HSN8591-160	90	1,328	1,204	1,090	984	886	796	712	636	565	499	439	384
	110	1,173	1,064	963	869	782	702	628	559	494	435	380	329
	120	1,085	984	891	803	723	647	577	512	451	395	342	292

Data are valid for R404A. Slight variations have to be considered for R507A – see BITZER Software.
Economiser operation: performance data with liquid subcooling (tcu = tms + 10 °F)
For operation with R404A and R507A polyol-ester oil (BSE170) is required.

R22 performance data 60 Hz based on 20°F suction superheat, without liquid subcooling
High- Medium temperature range

Compressor Model Number	Cond. temp. °F	Cooling capacity [kBTUH] Evaporation temperature °F											
		55	50	45	40	35	30	25	20	15	10	5	0
HSK8551-110	90	1,817	1,662	1,516	1,381	1,255	1,138	1,030	929	836	750	671	599
	110	1,631	1,488	1,354	1,230	1,114	1,007	907	815	730	651	579	512
	130	1,410	1,280	1,159	1,045	940	843	753	669	592	521	455	
HSK8561-125	90	2,058	1,881	1,717	1,563	1,420	1,288	1,164	1,050	944	846	756	673
	110	1,836	1,674	1,524	1,383	1,253	1,132	1,019	916	820	731	650	575
	130	1,598	1,451	1,314	1,187	1,069	959	858	765	680	601	528	
HSK8571-140	90	2,323	2,125	1,940	1,768	1,608	1,459	1,321	1,193	1,074	964	862	769
	110	2,087	1,906	1,737	1,580	1,434	1,297	1,171	1,054	945	845	752	667
	130	1,828	1,665	1,513	1,371	1,239	1,115	1,001	894	795	704	619	

R22 performance data 60 Hz based on 20°F suction superheat, without liquid subcooling
Low temperature range Economiser operation

Compressor Model Number	Cond. temp. °F	Cooling capacity [kBTUH] Evaporation temperature °F											
		5	0	-5	-10	-15	-20	-25	-30	-35	-40	-45	-50
HSN8571-125	90	1,001	910	825	746	672	603	540	481	426	376	330	288
	110	942	855	773	697	626	560	499	442	389	340	295	254
	130	862	779	702	630	563	499	440	386	334	286		
HSN8591-160	90	1,270	1,152	1,042	940	846	758	676	601	532	468	409	355
	110	1,189	1,078	975	879	789	706	"629 "	557	490	429	372	320
	130	1,093	990	894	803	719	640	566	498	433	374		

Performance data for individual input data and 50 Hz operation see BITZER Software
Standard operation: performance data without liquid subcooling Economiser operation: performance data with liquid subcooling (tcu = tms + 10 °F)
For operation with R22 the oils B100 or B150SH are required see page 6 "Lubricants".

TECUMSEH PRODUCTS

Tecumseh



AE2 Series Compressor



AG Series Compressor



AJ Series Compressor



Celseon AE2 Compressor



AK Series Compressor



AV Series Compressor



Celseon AE2 Evaporative Condensate Unit



Replacement Relay and Overload Kits



Start Capacitor Kit

Please see your local REFRIGERATIVE SUPPLY branch for details

COMPRESSORS CROSS REFERENCE

LEGACY AE COMPRESSORS CROSS REFERENCE

AE Model	*Functional Cross	Functional Item # (BOM)	Market	Refrigerant
AEA0415EXA	PHASED OUT	PHASED OUT	OEM	R22
AEA0415ZXC	AE4425Z-FZ1A	AE1245E-212-A4 SWEAT	OEM	R404A
AEA0415ZXD	AE4425Z-XN1A	AE1348E-212-A4 SWEAT	OEM	R404A
AEA1332YXA	AZA1332YXA	AZ420AR-235-A6L SWEAT	OEM	R134a
AEA1336AXA	PHASED OUT	PHASED OUT	WHSL	R12
AEA1338YXA	PHASED OUT	PHASED OUT	OEM/WHSL	R134a
AEA1343AXA	PHASED OUT	PHASED OUT	WHSL	R12
AEA1360AXA	PHASED OUT	PHASED OUT	WHSL	R12
AEA1360YXA	THA1358YXA	TH130AR-245-J7HV SWEAT	OEM/WHSL	R134a
AEA1360YXC	PHASED OUT	PHASED OUT	OEM	R134a
AEA1410AXA	AE2410A-AA1A	AE1249E-679-J7 SWEAT	WHSL	R12
AEA1410YXA	AE2410Y-AA1A	AE1156E-679-J7 SWEAT	WHSL	R134a
AEA1410YXC	PHASED OUT	PHASED OUT	OEM	R134a
AEA1411EXA	PHASED OUT	PHASED OUT	WHSL	R22
AEA1413AXA	AE2413A-AA1B	AE1255E-679-J7 SWEAT/ AE1317E-219-J7 VALVE	WHSL	R12
AEA1413YXA	AE2413Y-AA1B	AE1240E-679-J7 SWEAT	WHSL	R134a
AEA1415EXA	PHASED OUT	PHASED OUT	WHSL	R22
AEA2380ZXA	AE2410Z-AA1A	AE1126E-106-A4 SWEAT/ AE1126E-106-J7 SWEAT	OEM/WHSL	R404A
AEA2380ZXC	AE2410Z-FZ1A	AE1291E-106-A4 SWEAT	OEM	R404A
AEA2410AXA	AE2410A-AA1A	AE1249E-679-J7 SWEAT	WHSL	R12
AEA2410AXC	PHASED OUT	PHASED OUT	OEM	R12
AEA2410YXA	AE2410Y-AA1A	AE1156E-679-A4 SWEAT /AE1156E-679-J7 SWEAT	OEM/WHSL	R134a
AEA2410YXC	AE2413Y-FZ1A	AE1333E-679-A4 SWEAT	OEM	R134a
AEA2411ZXA	AE2415Z-AA1A	AE1157E-679-A4 SWEAT / AE1157E-679-J7 SWEAT	OEM/WHSL	R404A
AEA2411ZXC	AE2415Z-FZ1B	AE1185E-679-A4 SWEAT	OEM	R404A
AEA2411ZXD	AE2415Z-GS1A	AE-1321-E available, ATP Org set up required	OEM	R404A
AEA2413AXA	AE2413A-AA1B	AE1255E-679-J7 SWEAT/ AE1317E-219-J7 VALVE	WHSL	R12
AEA2413YXA	AE2413Y-AA1B	AE1240E-679-J7 SWEAT	OEM/WHSL	R134a
AEA2413YXC	AE2413Y-FZ1A	AE1333E-679-A4 SWEAT	OEM	R134a
AEA2415AAB	AE2413A-AA1B	AE1255E-679-J7 SWEAT/ AE1317E-219-J7 VALVE	WHSL	R12
AEA2419ZXA	AE2425Z-AA3C	AE1182E-208-A4 SWEAT / AE1182E-208-J7 SWEAT	OEM	R404A
AEA2419ZXC	PHASED OUT	PHASED OUT	OEM	R404A
AEA3414APP	PHASED OUT	PHASED OUT	OEM	R12
AEA3414AXA	AE3425A-AA1A	AE1253E-212-J7 SWEAT	WHSL	R12
AEA3414YXA	THA0370YXA	MR7869	OEM/WHSL	R134a
AEA3414YXC	THA0370YXC	TH730JR-235-A4HB	OEM	R134a
AEA3414YXP	AZA0395YXP	AZ440ER-434-A4PB SWEAT / AZ440ER-236-A6 SWEAT	OEM	R134a
AEA3417AXA	AE3425A-AA1A	AE1253E-212-J7 SWEAT		R12
AEA3417YXA	THA0410YXA	MR7823	OEM/WHSL	R134a
AEA3417YXC	THA0412YXC	TH760JR-236-A4HB	OEM	R134a
AEA3417YXD	PHASED OUT	PHASED OUT	OEM	R134a
AEA3425AXA	AE3425A-AA1A	AE1253E-212-J7 SWEAT	WHSL	R12
AEA3425YXA	AE3425Y-AA1A	AE1004E-212-A4 SWEAT / AE1004E-212-J7 SWEAT / AE1198E-215-J7 VALVE	OEM/WHSL	R134a
AEA3425YXC	THA0412YXC	TH760JR-236-A4HB	OEM	R134a
AEA3425YXD	PHASED OUT	PHASED OUT	OEM	R134a
AEA3430AXA	AE4430A-AA1A	AE1251E-212-J7 SWEAT / AE1254E-215-J7 VALVE	WHSL	R12
AEA3430YXA	AE3430Y-AA1A	AE1153E-212-A4 SWEAT / AE1153E-212-J7 VALVE	OEM/WHSL	R134a
AEA3430YXC	AE3430Y-FZ1A	AE1186E-212-A4	OEM	R134a
AEA3440AXA	AE4440A-AA1A	AE1250E-212-J7 SWEAT /AE1252E-215-J7 VALVE	WHSL	R12
AEA3440YXA	AE3440Y-AA1A	AE1155E-212-A4 SWEAT /AE1155E-212-J7 SWEAT	OEM/WHSL	R134a
AEA3440YXC	AE3440Y-FZ1A	AE1235E-212-A4	OEM	R134a

** Review fit, form and function with customer application*

COMPRESSORS CROSS REFERENCE

LEGACY AE COMPRESSOR CROSS REFERENCE (CONT'D)

AE Model	*Functional Cross	Functional Item # (BOM)	Market	Refrigerant
AEA3440YXD	AE3440Y-XN1A	AE1192E-209-A4	OEM	R134a
AEA3448YXA	AE3440Y-AA1A	AE1155E-212-A4 SWEAT	OEM	R134a
AEA3448YXC	AE3440Y-FZ1A	AE1235E-212-A4	OEM	R134a
AEA4430AXA	AE4430A-AA1A	AE1251E-212-J7 SWEAT / AE1254E-215-J7 VALVE	WHSL	R12
AEA4430AXD	PHASED OUT	PHASED OUT	EXPORT	R12
AEA4430YLS	AE4430Y-AA1A	AE1023E-212-A4 SWEAT	EXPORT	R134a
AEA4430YXA	AE4430Y-AA1A	AE1023E-212-A4 SWEAT / AE1023E-212-J7 SWEAT / AE1199E-215-J7 VALVE	OEM/WHSL	R134a
AEA4430YXC	AE4430Y-FZ1A	AE1232E-212-A4	OEM	R134a
AEA4430YXD	AE4430Y-XN1A	AE1188E-212-A4	OEM	R134a
AEA4440ALS	AE4440A-AA1A	AE1250E-212-J7 SWEAT /AE1252E-215-J7 VALVE	EXPORT	R12
AEA4440AXA	AE4440A-AA1A	AE1250E-212-J7 SWEAT /AE1252E-215-J7 VALVE	WHSL	R12
AEA4440AXC	PHASED OUT	PHASED OUT	OEM/EXPORT	R12
AEA4440AXD	PHASED OUT	PHASED OUT	EXPORT	R12
AEA4440YXA	AE4440Y-AA1A	AE1022E-212-A4 SWEAT/ AE1022E-212-J7 SWEAT / AE1200E-215-J7 VALVE	OEM/WHSL	R134a
AEA4440YXC	AE4440Y-FZ1A	AE1187E-212-A4	OEM	R134a
AEA4440YXD	AE4440Y-XN1A	AE1204E-209-A4 SWEAT / AE1204E-209-J7	OEM/WHSL	R134a
AEA4448AXA	AE4440A-AA1A	AE1250E-212-J7 SWEAT /AE1252E-215-J7 VALVE	WHSL	R12
AEA4448YXA	AE4450Y-AA1A	AE1154E-209-A4 SWEAT / AE1154E-209-J7 SWEAT	OEM/WHSL	R134a
AEA4448YXD	AE4450Y-XN3C	AE1294E-677-A4 SWEAT/ AE1294E-677-A6 SWEAT	OEM	R134a
AEA5455EXA	AE4456E-DS1B	AE1364E-214-J7 SWEAT	WHSL	R22
AEA5460EXA	AE4456E-DS1B	AE1364E-214-J7 SWEAT	WHSL	R22
AEA5465EXA	AE4460E-DS**	MR7244	WHSL	R22
AEA5465EXC	PHASED OUT	PHASED OUT	EXPORT	R22
AEA5465EXD	AE4460E-ES**	MR5206	WHSL	R22
AEA5465EXV	PHASED OUT	PHASED OUT	OEM	R22
AEA5470EXA	PHASED OUT	PHASED OUT	OEM	R22
AEA9415EXA	AE4430E-DS1A	AE1320E-212-J7 SWEAT	WHSL	R22
AEA9415YXA	AE4430Y-AA1A	AE1023E-212-A4 SWEAT	OEM	R134a
AEA9415ZXA	AE4430Z-AA1A	AE1167E-212-A4 SWEAT / AE1167E-212-J7 SWEAT	OEM/WHSL	R404A
AEA9422EXA	AE4450E-DS1B	AE1363E-209-J7 SWEAT	WHSL	R22
AEA9422EXC	PHASED OUT	PHASED OUT	OEM	R22
AEA9422ZXA	AE4440Z-AA1A	AE1168E-209-A4 SWEAT / AE1168E-209-J7 SWEAT	OEM/WHSL	R404A
AEA9422ZXC	AE4440Z-FZ1A	AE1261E-209-A4 SWEAT	OEM	R404A
AEA9422ZXD	PHASED OUT	PHASED OUT	OEM	R404A
AEA9423YXA	AE4440Y-AA1A	AE1022E-212-A4 SWEAT	OEM	R134a
AEB1380AXA	PHASED OUT	PHASED OUT	WHSL	R12
AEB1411AXA	AE2410A-AA1A	AE1249E-679-J7 SWEAT	OEM	R12
AEB1413AXA	AE2413A-AA1B	AE1255E-679-J7 SWEAT/ AE1317E-219-J7 VALVE	WHSL	R12
AEB4448YXC	AE4440Y-FZ1A	AE1187E-212-A4 SWEAT	OEM	R134a
AEB4448YXC	AE4450Y-FZ1C	AE1158E-209-A4 SWEAT	OEM	R134a
AEB1413AXA	AE2413A-AA1B	AE1255E-679-J7 SWEAT/ AE1317E-219-J7 VALVE	WHSL	R12
AEB4448YXC	AE4440Y-FZ1A	AE1187E-212-A4 SWEAT	OEM	R134a
AEB4448YXC	AE4450Y-FZ1C	AE1158E-209-A4 SWEAT	OEM	R134a

** Review fit, form and function with customer application*

CONDENSING UNITS CROSS REFERENCE

ARGUS GOLD Package Outdoor Condensing Units CROSS REFERENCE

Stock	Item Number	Model Number	Voltage	HP	Nom Btuh		Fans	Chassis
					R404A*	R448A/R449A		
	Commercial Temperature -10° F to +45° F (Nominal Rating Point +20° F SST, 95° F Amb)							
	*2JH201-GF	*ASHR9440ZAAFG1	115-60-1	1/2	3,550	3,174	1	Small
	*2JH202-GF	*ASHR9440ZNAFG1	208-230-60-1	1/2	3,550	3,174	1	Small
	*2JH701-GF	*ASHR9460ZNAFG1	208-230-60-1	3/4	6,343	5,249	1	Small
	*2JH1001-GF	*ASHR9480ZNAFG1	208-230-60-1	1	8,127	6,719	1	Small
	*2JH1006-GF	*ASHR9510ZNAFG1	208-230-60-1	1 1/4	10,730	9,339	2	Medium
	2JH1007-GF	ASHR9510ZFAFG1	200-230-60-3	1 1/4	10,730	9,339	2	Medium
	*2JH3202-GF	*ASHR9512ZNAFG1	208-230-60-1	1 1/2	14,902	13,484	2	Medium
	2JH3203-GF	ASHR9512ZFAFG1	200-230-60-3	1 1/2	14,902	13,484	2	Medium
	*2JH2001-GF	*ASHS9516ZNAFG1	208-230-60-1	2	17,298	16,072	2	Medium
	2JH2006-GF	ASHS9516ZFAFG1	200-230-60-3	2	17,298	16,072	2	Medium
	*2JH2008-GF	*ASHS9520ZNAFG1	208-230-60-1	2 1/2	21,457	18,281	2	Medium
	2JH2009-GF	ASHS9520ZFAFG1	200-230-60-3	2 1/2	21,457	18,281	2	Medium
	2JH2002-GF	ASHS9522ZNAFG1	208-230-60-1	2 4/5	23,640	20,872	2	Medium
	2JH2007-GF	ASHS9522ZFAFG1	200-230-60-3	2 4/5	23,640	20,872	2	Medium
	*2JH3001-GF	*ASHS9524ZNAFG1	208-230-60-1	3	29,441	28,111	1	Large
	*2JH3004-GF	*ASHS9524ZFAFG1	200-230-60-3	3	29,441	28,111	1	Large
	*2JH4001-GF	*ASHS9532ZNAFG1	208-230-60-1	4	36,815	33,037	1	Large
	*2JH4002-GF	*ASHS9532ZFAFG1	200-230-60-3	4	36,815	33,037	1	Large
	*2JH5001-GF	*ASHS9540ZNAFG1	208-230-60-1	5	42,911	39,354	1	Large
	*2JH5002-GF	*ASHS9540ZFAFG1	208-230-60-3	5	42,911	39,354	1	Large
	*2JH6001-GF	*ASHS9548ZFAFG1	208-230-60-3	6	49,405	45,954	1	Large

*** RSL STOCKED ITEMS**

	Low Temperature -40° F to +10° F (Nominal Rating Point -10° F SST, 95° F Amb)							
	*2JH703-GF	*ASHR2430ZNAFG1	208-230-60-1	3/4	2,870		1	Small
	2JH1003-GF	ASHR2440ZNAFG1	208-230-60-1	1	3,533		1	Small
	2JH1005-GF	ASHR2450ZNAFG1	208-230-60-1	1 1/4	4,400		1	Small
	*2JH3201-GF	*ASHR2460ZNAFG1	208-230-60-1	1 1/2	6,050		1	Small
	2JH3204-GF	ASHR2460ZFAFG1	208-230-60-3	1 1/2	6,050		1	Small
	*2JH2004-GF	*ASHR2480ZNAFG1	208-230-60-1	2	9,843		2	Medium
	2JH2010-GF	ASHR2480ZFAFG1	208-230-60-3	2	9,843		2	Medium
	*2JH2005-GF	*ASHR2510ZNAFG1	208-230-60-1	2 1/2			2	Medium
	2JH2011-GF	ASHR2510ZFAFG1	208-230-60-3	2 1/2			2	Medium
	2JH3007-GF	ASHS2512ZNAFG1	208-230-60-1	3	14,160		2	Medium
	*2JH3008-GF	*ASHS2512ZFAFG1	208-230-60-3	3	14,160		2	Medium
	*2JH3005-GF	*ASHS2514ZNAFG1	208-230-60-1	3 1/2			2	Medium
	2JH3006-GF	ASHS2514ZFAFG1	208-230-60-3	3 1/2			2	Medium
	*2JH5003-GF	*ASHS2520ZNAFG1	208-230-60-1	5			1	Large
	*2JH5004-GF	*ASHS2520ZFAFG1	208-230-60-3	5			1	Large
	*2JH6002-GF	*ASHS2524ZFAFG1	208-230-60-3	6			1	Large

*** RSL STOCKED ITEMS**

- Approved for R404A, R448A, R449A and R452A. Nominal Capacity based on R404A.
Please see ARGUS Technical Guide for Capacity Tables with other Refrigerants and Microchannel Condenser

GOLD Feature Package

FEATURE	Low Temp Units	Commercial Temp Units
Insul. Suction Accum.	●	●
Suction Filter	●	●
Service Valves	●	●
Crankcase Heater	●	●
Heated/Insul. Rec.	●	●
Adj. Low Press Control	●	●
High Pressure Switch	●	●
Filter Drier/Sightglass	●	●
Check Valve	●	●
Head Press Control	●	●
Air Defrost Timer		●
Electric Defrost Timer	●	
Phase Monitor	**3 Phase Units**	**3 Phase Units**
LED Light in Serv. Panel	●	●
Fin Tube Condenser	●	●

OPTIONS
Dual Pressure Control
Anti-cycling Control
Non Fused Disconnect
E Coated Condenser
Oil Separator
LL Solenoid & Pumpdown
Oversized Receiver
Microchannel Condenser

** RSL Stocked Items*

CONDENSING UNITS CROSS REFERENCE

GOLD GEN III Package Outdoor Condensing Units

Item Number	Model Number	Voltage	HP	Nom Btu/h
				R404A*
Commercial Temperature -10° F to +45° F SST (Nominal Rating Point +20° F, +95°F Ambient)				
32L292-6C	AKA9440ZXDUS	208-230-60-1; 200-50-1	1/2	4,800
32L751-6C	AKA9464ZXDUS	208-230-60-1; 200-50-1	3/4	6,400
32L1138-6C	AWA9490ZXNUS	208-230-60-1; 200-220-50-1	7/8	10,000
32L1140-6C	AWA9490ZXTUS	200-230-60-3; 200-220-50-3	7/8	10,000
32L1351-6C	AWA9510ZXNUN	208-230-60-1; 200-220-50-1	1	10,700
32L1352-6C	AWA9510ZXTUN	200-230-60-3; 200-220-50-3	1	10,700
32L1451-6C	AWA9512ZXNUN	208-230-60-1; 200-220-50-1	1 1/4	11,600
32L1452-6C	AWA9512ZXTUN	200-230-60-3; 200-220-50-3	1 1/4	11,600
32L3238-6C	AWA9514ZXNUN	208-230-60-1; 200-220-50-1	1 3/4	13,100
32L3239-6C	AWA9514ZXTUN	200-230-60-3; 200-220-50-3	1 3/4	13,100
32L2165-6C	VSC9518ZNAUN	208-230-60-1	2	17,300*
32L2166-6C	VSC9518ZXTUN	200-230-60-3; 200-220-50-3	2	17,300*
32L2133-6C	AWA9518ZXNUN	208-230-60-1; 200-220-50-1	2 1/4	17,300
32L2134-6C	AWA9518ZXTUN	200-230-60-3; 200-220-50-3	2 1/4	17,300
32L3277-6C	VSC9522ZNAUN	208-230-60-1	2 1/2	21,300*
32L3278-6C	VSC9522ZXTUN	200-230-60-3; 200-220-50-3	2 1/2	21,300*
32L2135-6C	AVA9523ZXNUN	208-230-60-1; 200-220-50-1	3	21,200
32L2136-6C	AVA9523ZXTUN	200-230-60-3; 200-220-50-3	3	21,200
32L3279-6C	VSC9524ZNAUM	208-230-60-1	3	23,600*
32L3280-6C	VSC9524ZXTUM	200-230-60-3; 200-220-50-3	3	23,600*
32L3160-6C	AVA9525ZXNUN	208-230-60-1; 200-220-50-1	3 1/4	23,100
32L3154-6C	AVA9525ZXTUN	200-230-60-3; 200-220-50-3	3 1/4	23,100
32L3157-6C	AVA9529ZXNUN	208-230-60-1; 200-220-50-1	3 1/2	27,200
32L3158-6C	AVA9529ZXTUN	200-230-60-3; 200-220-50-3	3 1/2	27,200
32L3281-6C	VSC9529ZNAUM	208-230-60-1	3 1/2	28,900*
32L3282-6C	VSC9529ZXTUM	200-230-60-3; 200-220-50-3	3 1/2	28,900*
32L4054-6C	AVA9532ZXNUM	208-230-60-1; 200-220-50-1	4	32,100
32L4055-6C	AVA9532ZXTUM	200-230-60-3; 200-220-50-3	4	32,100
32L4097-6C	VSC9534ZNAUM	208-230-60-1	4	33,800*
32L4098-6C	VSC9534ZXTUM	200-230-60-3; 200-220-50-3	4	33,800*
32L4083-6C	AGA9538ZXNUM	208-230-60-1; 200-220-50-1	4 3/4	35,600
32L4084-6C	AGA9538ZXTUM	200-230-60-3; 200-220-50-3	4 3/4	35,600
32L5095-6C	AGA9542ZXNUM	208-230-60-1; 200-220-50-1	5	39,100
32L5098-6C	AGA9542ZXTUM	200-230-60-3; 200-220-50-3	5	39,100

*** - Compatible for R404A, R507, R134a, R22, R407F, R407A. Nominal Capacity is with R404A**
R404A - also approved for R448A, R449A, R452A. Nominal Capacity is with R404A

GOLD ARGUS Package Outdoor Condensing Units

Item Number	Model Number	Voltage	HP	Nom Btu/h		Compressor	Chassis
				R404A*	R448A/R449A		
Medium Temperature -10° F to +45° F SST (Nominal Rating Point +20° F, +95°F Ambient)							
2JH201-GF	ASHR9440ZAAFG1	115-60-1	1/2	3,550	3,174	Recip	Small
2JH202-GF	ASHR9440ZNAFG1	208-230-60-1	1/2	3,550	3,174	Recip	Small
2JH701-GF	ASHR9460ZNAFG1	208-230-60-1	3/4	6,343	5,249	Recip	Small
2JH1006-GF	ASHR9510ZNAFG1	208-230-60-1	1 1/4	10,730	9,339	Recip	Medium
2JH1007-GF	ASHR9510ZFAFG1	200-230-60-3	1 1/4	10,730	9,339	Recip	Medium
2JH1006-GF	ASHR9510ZNAFG1	208-230-60-1	1 1/4	10,730	9,339	Recip	Medium
2JH1007-GF	ASHR9510ZFAFG1	200-230-60-3	1 1/4	10,730	9,339	Recip	Medium
2JH3202-GF	ASHR9512ZNAFG1	208-230-60-1	1 1/2	14,902	13,484	Recip	Medium
2JH3203-GF	ASHR9512ZFAFG1	200-230-60-3	1 1/2	14,902	13,484	Recip	Medium
2JH3202-GF	ASHR9512ZNAFG1	208-230-60-1	1 1/2	14,902	13,484	Recip	Medium
2JH3203-GF	ASHR9512ZFAFG1	200-230-60-3	1 1/2	14,902	13,484	Recip	Medium
2JH2001-GF	ASHS9516ZNAFG1	208-230-60-1	2	17,298	16,072	Scroll	Medium
2JH2006-GF	ASHS9516ZFAFG1	200-230-60-3	2	17,298	16,072	Scroll	Medium
2JH2001-GF	ASHS9516ZNAFG1	208-230-60-1	2	17,298	16,072	Scroll	Medium
2JH2006-GF	ASHS9516ZFAFG1	200-230-60-3	2	17,298	16,072	Scroll	Medium
2JH2008-GF	ASHS9520ZNAFG1	208-230-60-1	2 1/2	21,457	18,281	Scroll	Medium
2JH2009-GF	ASHS9520ZFAFG1	200-230-60-3	2 1/2	21,457	18,281	Scroll	Medium
2JH2008-GF	ASHS9520ZNAFG1	208-230-60-1	2 1/2	21,457	18,281	Scroll	Medium
2JH2009-GF	ASHS9520ZFAFG1	200-230-60-3	2 1/2	21,457	18,281	Scroll	Medium
2JH2002-GF	ASHS9522ZNAFG1	208-230-60-1	2 4/5	23,640	20,872	Scroll	Medium
2JH2007-GF	ASHS9522ZFAFG1	200-230-60-3	2 4/5	23,640	20,872	Scroll	Medium
2JH2002-GF	ASHS9522ZNAFG1	208-230-60-1	2 4/5	23,640	20,872	Scroll	Medium
2JH2007-GF	ASHS9522ZFAFG1	200-230-60-3	2 4/5	23,640	20,872	Scroll	Medium
2JH3001-GF	ASHS9524ZNAFG1	208-230-60-1	3	29,441	28,111	Scroll	Large
2JH3004-GF	ASHS9524ZFAFG1	200-230-60-3	3	29,441	28,111	Scroll	Large
2JH3001-GF	ASHS9524ZNAFG1	208-230-60-1	3	29,441	28,111	Scroll	Large
2JH3004-GF	ASHS9524ZFAFG1	200-230-60-3	3	29,441	28,111	Scroll	Large
2JH4001-GF	ASHS9532ZNAFG1	208-230-60-1	4	36,815	33,037	Scroll	Large
2JH4002-GF	ASHS9532ZFAFG1	200-230-60-3	4	36,815	33,037	Scroll	Large
2JH4001-GF	ASHS9532ZNAFG1	208-230-60-1	4	36,815	33,037	Scroll	Large
2JH4002-GF	ASHS9532ZFAFG1	200-230-60-3	4	36,815	33,037	Scroll	Large
2JH4001-GF	ASHS9532ZNAFG1	208-230-60-1	4	36,815	33,037	Scroll	Large
2JH4002-GF	ASHS9532ZFAFG1	200-230-60-3	4	36,815	33,037	Scroll	Large
2JH5001-GF	ASHS9540ZNAFG1	208-230-60-1	5	42,911	39,354	Scroll	Large
2JH5002-GF	ASHS9540ZFAFG1	200-230-60-3	5	42,911	39,354	Scroll	Large
2JH6001-GF	ASHS9548ZFAFG1	200-230-60-3	6	49,405	45,954	Scroll	Large

Item No.	Model Number	Voltage	HP	Nom Btu/h
				R404A*
Medium Temperature -10° F to +30° F SST (Nominal Rating Point +20° F, +95°F Ambient)				
32L1106-6C	AJA7494ZXDUS	208-230-60-1; 200-50-1	1 1/4	8,800
32L3217-6C	AWA7512ZXDUS	208-230-60-1; 200-50-1	1 1/2	11,000
32L3218-6C	AWA7512ZXTUS	200-230-60-3; 200-220-50-3	1 1/2	11,000
32L3220-6C	AWA7515ZXDUS	208-230-60-1; 200-50-1	1 3/4	13,400
32L3219-6C	AWA7515ZXTUS	200-230-60-3; 200-220-50-3	1 3/4	13,400
32L3136-6C	AVA7523ZXNUN	208-230-60-1; 200-220-50-1	3	21,300
32L3137-6C	AVA7523ZXTUN	200-230-60-3; 200-220-50-3	3	21,300

R404A - also approved for R448A, R449A, R452A. Nominal Capacity is with R404A

Item Number	Model Number	Voltage	HP	Nom Btu/h		Compressor	Chassis
				R404A*	R448A/R449A		
Medium Temperature -10° F to +45° F SST (Nominal Rating Point +20° F, +95°F Ambient)							
2JH1001-GF	ASHR9480ZNAFG1	208-230-60-1	1	8,127	6,719	Recip	Small
2JH1006-GF	ASHR9510ZNAFG1	208-230-60-1	1 1/4	10,730	9,339	Recip	Medium
2JH1007-GF	ASHR9510ZFAFG1	200-230-60-3	1 1/4	10,730	9,339	Recip	Medium
2JH3202-GF	ASHR9512ZNAFG1	208-230-60-1	1 1/2	14,902	13,484	Recip	Medium
2JH3203-GF	ASHR9512ZFAFG1	200-230-60-3	1 1/2	14,902	13,484	Recip	Medium
2JH2008-GF	ASHS9520ZNAFG1	208-230-60-1	2 1/2	21,457	18,281	Scroll	Medium
2JH2009-GF	ASHS9520ZFAFG1	200-230-60-3	2 1/2	21,457	18,281	Scroll	Medium

Item No.	Model Number	Voltage	HP	Nom Btu/h
				R404A*
Low Temperature -40° F to +10° F (Nominal Rating Point -10° F, +95°F Ambient)				
32L511-6C	AJA2423ZXDUS	208-230-60-1; 200-50-1	1/2	2,500
32L727-6C	AJA2436ZXDUS	208-230-60-1; 200-50-1	3/4	3,400
32L1118-6C	AWA2444ZXDUS	208-230-60-1; 200-50-1	1	5,000
32L1121-6C	AWA2444ZXTUS	200-230-60-3; 200-220-50-3	1	5,000
32L3243-6C	AWA2457ZXDUS	208-230-60-1; 200-50-1	1 1/2	5,800
32L3244-6C	AWA2457ZXTUS	200-230-60-3; 200-220-50-3	1 1/2	5,800
32L2114-6C	AWA2479ZXDUS	208-230-60-1; 200-50-1	2	7,300
32L2115-6C	AWA2479ZXTUS	200-230-60-3; 200-220-50-3	2	7,300
32L2111-6C	AWA2490ZXDUN	208-230-60-1; 200-50-1	2 1/4	8,100
32L2112-6C	AWA2490ZXTUN	200-230-60-3; 200-220-50-3	2 1/4	8,100
32L2116-6C	AVA2510ZXNUS	208-230-60-1; 200-220-50-1	2 1/2	9,200
32L2117-6C	AVA2510ZXTUS	200-230-60-3; 200-220-50-3	2 1/2	9,200
32L3140-6C	AVA2512ZXNUN	208-230-60-1; 200-220-50-1	2 3/4	11,000
32L3141-6C	AVA2512ZXTUN	200-230-60-3; 200-220-50-3	2 3/4	11,000
32L3144-6C	AVA2515ZXNUN	208-230-60-1; 200-220-50-1	3	13,500
32L3145-6C	AVA2515ZXTUN	200-230-60-3; 200-220-50-3	3	13,500
32L4099-6C	VSC2518ZXTUM	200-230-60-3; 200-220-50-3	4 1/2	17,800*
32L5113-6C	VSC2522ZXTUM	200-230-60-3; 200-220-50-3	5 1/2	21,400*
32L6007-6C	VSC2527ZXTUM	200-230-60-3; 200-220-50-3	6 1/2	26,100*
32L8000-6C	VSC2533ZXTUM	200-230-60-3; 200-220-50-3	8	33,000*

*** - Compatible for R404A, R507, R134a, R22, R407F, R407A. Nominal Capacity is with R404A**
R404A - also approved for R448A, R449A, R452A. Nominal Capacity is with R404A

Item Number	Model Number	Voltage	HP	Nom Btu/h		Compressor	Chassis
				R404A*	R448A/R449A		
Low Temperature -40° F to +10° F (Nominal Rating Point -10° F, +95°F Ambient)							
2JH703-GF	ASHR2430ZNAFG1	208-230-60-1	3/4	2,870		Recip	Small
2JH1003-GF	ASHR2440ZNAFG1	208-230-60-1	1	3,533		Recip	Small
2JH1005-GF	ASHR2450ZNAFG1	208-230-60-1	1 1/4	4,400		Recip	Small
2JH3201-GF	ASHR2460ZNAFG1	208-230-60-1	1 1/2	6,050		Recip	Small
2JH3204-GF	ASHR2460ZFAFG1	200-230-60-3	1 1/2	6,050		Recip	Small
2JH2004-GF	ASHR2480ZNAFG1	208-230-60-1	2	9,843		Recip	Medium
2JH2010-GF	ASHR2480ZFAFG1	200-230-60-3	2	9,843		Recip	Medium
2JH2004-GF	ASHR2480ZNAFG1	208-230-60-1	2	9,843		Recip	Medium
2JH2010-GF	ASHR2480ZFAFG1	200-230-60-3	2	9,843		Recip	Medium
2JH2004-GF	ASHR2480ZNAFG1	208-230-60-1	2	9,843		Recip	Medium
2JH2010-GF	ASHR2480ZFAFG1	200-230-60-3	2	9,843		Recip	Medium
2JH2005-GF	ASHR2510ZNAFG1	208-230-60-1	2 1/2			Recip	Medium
2JH2011-GF	ASHR2510ZFAFG1	200-230-60-3	2 1/2			Recip	Medium
2JH3007-GF	ASHS2512ZNAFG1	208-230-60-1	3	14,160		Scroll	Medium
2JH3008-GF	ASHS2512ZFAFG1	200-230-60-3	3	14,160		Scroll	Medium
2JH3005-GF	ASHS2514ZNAFG1	208-230-60-1	3 1/2			Scroll	Medium
2JH3006-GF	ASHS2514ZFAFG1	200-230-60-3	3 1/2			Scroll	Medium
2JH5003-GF	ASHS2520ZFAFG1	200-230-60-3	5			Scroll	Large
2JH5003-GF	ASHS2520ZFAFG1	200-230-60-3	5			Scroll	Large
2JH6002-GF	ASHS2524ZFZFG1	200-230-60-3	6			Scroll	Large

GOLD Feature Package GEN III

FEATURE	Low Temp Units	High/Medium/Commercial
Suction Accumulator	●	●
Suction Filter	●	●
Service Valves	●	●
Crankcase Heater	●	●
Heated/Insul. Rec.	●	●
Adj. Low Press Control	●	●
High Pressure Switch	●	●
Filter Drier/Sightglass	●	●
Check Valve	●	●
Head Press Control	●	●
Adj. Fan Cycling Cont.	**2 Fan Models Only**	**2 Fan Models Only**
Electric Defrost Timer	●	

GOLD Feature Package ARGUS

FEATURE	Low Temp Units	Medium
Suction Accumulator	●	●
Suction Filter	●	●
Service Valves	●	●
Crankcase Heater	●	●
Heated/Insul. Rec.	●	●
Adj. Low Press Contro	●	●
High Pressure Switch	●	●
Filter Drier/Sightglass	●	●
Check Valve	●	●
Head Press Control	●	●
Air Defrost Timer		●
Electric Defrost Timer	●	
Phase Monitor	**3 Phase Only**	**3 Phase Only**

TECUMSEH CELSEON LOW PROFILE CONDENSING UNITS

SPECIFICATIONS

Application

Evaporating Ranges:	High Temperature	+10°F to +55°F (-12.2°C to +12.8°C)
	Commercial Temperature	-5°F to +40°F (-20.6°C to +4.4°C)
	Low Temperature	-40°F to +5°F (-40°C to -15.0°C)
Ambient Operating Temperature:		+80°F (+26.6°C) to +110°F (+43.3°C)

Materials

Valves:	Steel, Base Mounted with Copper Sweat Connections	
Receiver:	Steel, Plated Body with Copper Sweat Connections	
Base Plate:	Cold Rolled Steel 16 Ga. Galvanized G90U	
Refrigerant/Oil:	R134a, R404A/R507 Polyolester (POE)	R22, R12 Synthetic Alkylate (AB)
Electrical Terminations:	Screw	
Fan Guard:	High Density Polypropylene	
Fan Blade:	Polypropylene	
Fan Motor:	Shaded Pole (6 or 9 Watt) or ECM	
Condenser:	Copper Tube and Aluminum Fin	
Electrical Cord:	Length: 20 inches (508 mm)	Type: Three Prong, Grounded Plug

Physical Properties

Dimensions:	**Length:** 16 inches (406 mm)	**Width:** 11.5 inches (292 mm)	**Height:** 8.9 inches (226 mm) *9.9 inch es (252 mm) *TPA models only
Connection Type:	Suction Line: 5/16 inch (7.9 mm) without valves or 3/8 inch (9.5 mm)ODF Sweat with valves Liquid Line: 1/4 inch (6.4 mm) ODF Sweat		

DIMENSIONS

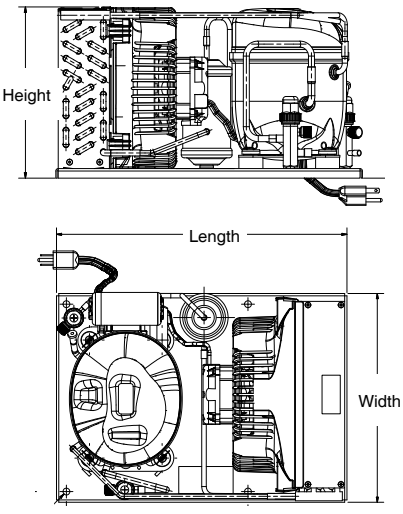

LOW PROFILE CONDENSING UNIT MODEL NUMBER

AE 4 440 Y - AA 1A S K (AE² models only)

AEA 9 440 Z XA S K (All models except AE²)

Family & Generation
AE², AEA, AEB Compressor Series
TPA, TPB Compressor Series
THA Compressor Series

Application Range
3, 4 High +10°F to +55°F (-12.2°C to +12.8°C)
0, 9,4* Comm. -5°F to +40°F (-20.6°C to +4.4°C)
*(AE² models only using R404A/R507 and R290)
1, 2 Low -40°F to +5°F (-40°C to -15.0°C)

Capacity
First number is total digits. Remainder is capacity in Btu/h.
This example 4000 Btu/h Capacity

Refrigerant
A = R12 E = R22 U = R290 Y = R134a Z = R404A/R507

Options
K (39), B (49), C (59), S (69)

Fan Motor Type
S Shaded Pole (SP), Std Efficiency
C Electronically Commutated Motor (ECM), High Efficiency

Voltage/Frequency/Ph
XA 115/60/1; 100/50/1
AB 115/60/1; 90/50/1
AA 115/60/1

Efficiency Level

AVAILABLE OPTIONS

Select the Model Designation for Customized Option Configurations

Options Model No (Item No)	Option Configuration
K (39)	Sweat Connections and Power Cord
B (49)	Sweat Connections, Power Cord and Receiver Tank
C (59)	Sweat Connections, Power Cord, Receiver Tank and Service Valves
S (69)	Sweat Connections, Power Cord and Service Valves

Note: Bill of Materials ending in XP or XPS ultize an ECM motor, except R290 units, which have ECM motors as standard.

LOW PROFILE CONDENSING UNITS

CELSEON® LOW PROFILE

Commercial Temperature

Model Number	Line Connections in (mm)		HP	Ambient ºF (ºC)	Capacity (Btu/h) at Rated Conditions/ Evaporator Temperature									
	Suction	Liquid			-5°F	0°F	5°F	10°F	15°F	20°F	25°F	30°F	35°F	40°F
					-20.6°C	-17.8°C	-15.0°C	-12.2°C	-9.4°C	-6.7°C	-3.9°C	-1.1°C	1.7°C	4.4°C
R404A/R507 CBP Application Range -5°F to 40°F (-20.6°C to 4.4°C)														
AE4425Z-AA1ASB	5/16 (7.9)	1/4 (6.4)	1/5	90 (32.2)	940	1,060	1,190	1,340	1,500	1,660	1,950	2,140	2,340	2,540
AE4430Z-AA1ASB	5/16 (7.9)	1/4 (6.4)	1/4	90 (32.2)	1,030	1,190	1,350	1,520	1,690	1,870	2,170	2,360	2,550	2,730
AE4440Z-AA1ASB	5/16 (7.9)	1/4 (6.4)	1/3	90 (32.2)	1,400	1,560	1,740	1,930	2,130	2,350	2,590	2,840	3,120	3,390
TPA9423ZAACB	5/16 (7.9)	1/4 (6.4)	1/3	90 (32.2)	1,610	1,770	1,940	2,130	2,340	2,560	2,800	3,050	3,320	3,600
R134a CBP Application Range -5°F to 40°F (-20.6°C to 4.4°C)														
THA0370YXASK	5/16 (7.9)	1/4 (6.4)	1/9	90 (32.2)	430	480	550	630	720	820	920	1,040	1,160	1,290
THA0384YXACK	5/16 (7.9)	1/4 (6.4)	1/8	90 (32.2)	670	700	750	830	900	1,000	1,110	1,230	1,370	1,530
THA0384YXASK	5/16 (7.9)	1/4 (6.4)	1/8	90 (32.2)	520	600	700	800	910	1,040	1,170	1,310	1,450	1,600
THA0410YXASK	5/16 (7.9)	1/4 (6.4)	1/6	90 (32.2)	620	720	830	950	1,090	1,240	1,400	1,560	1,730	1,910
THA0412YXACK	5/16 (7.9)	1/4 (6.4)	1/5	90 (32.2)	860	990	1,060	1,160	1,340	1,470	1,630	1,820	2,020	2,240
THA0412YXASK	5/16 (7.9)	1/4 (6.4)	1/5	90 (32.2)	750	860	990	1,130	1,290	1,470	1,650	1,840	2,030	2,200
TPB9415YAACB	5/16 (7.9)	1/4 (6.4)	1/5	90 (32.2)	1,040	1,150	1,290	1,440	1,630	1,810	2,030	2,250	2,490	2,760
TPB9417YAACB	5/16 (7.9)	1/4 (6.4)	1/4	90 (32.2)	1,210	1,310	1,450	1,590	1,790	2,000	2,240	2,490	2,760	3,070
TPB9421YAACC	3/8 (9.5)	1/4 (6.4)	1/3	90 (32.2)	1,370	1,480	1,710	1,880	2,130	2,380	2,660	2,960	3,280	3,630
R290 CBP Application Range -5°F to 40°F (-20.6°C to 4.4°C)														
THA9416UAACK	5/16 (7.9)	1/4 (6.4)	1/5	90 (32.2)	1,030	1,160	1,300	1,440	1,590	1,740	1,890	2,050	2,220	2,390
AE4430U-AA1ACK	5/16 (7.9)	1/4 (6.4)	1/4	90 (32.2)	-	-	1,560	1,750	1,950	2,160	2,390	2,630	2,880	3,130
AE4435U-AA1ACK	5/16 (7.9)	1/4 (6.4)	1/4	90 (32.2)	-	-	1,770	1,970	2,190	2,420	2,670	2,940	3,210	3,480
AE4440U-AA1ACK	5/16 (7.9)	1/4 (6.4)	1/3	90 (32.2)	-	-	2,060	2,310	2,560	2,830	3,100	3,380	3,660	3,950
R22 CBP Application Range -5°F to 40°F (-20.6°C to 4.4°C)														
AE4430E-AA1ASB	5/16 (7.9)	1/4 (6.4)	1/4	90 (32.2)	960	1,100	1,280	1,470	1,690	1,920	2,170	2,430	2,710	2,990

High Temperature

Model Number	Line Connections in (mm)		HP	Ambient ºF (ºC)	Capacity (Btu/h) at Rated Conditions/ Evaporator Temperature									
	Suction	Liquid			10°F	15°F	20°F	25°F	30°F	35°F	40°F	45°F	50°F	55°F
					-12.2°C	-9.4°C	-6.7°C	-3.9°C	-1.1°C	1.7°C	4.4°C	7.2°C	10.0°C	12.8°C
R134a HBP Application Range +10°F to 55°F (-12.2°C to 12.7°C)														
AE3425Y-AA1ASK	5/16 (7.9)	1/4 (6.4)	1/5	90 (32.2)	1,140	1,370	1,590	1,810	2,040	2,260	2,480	2,700	2,910	3,130
AE4430Y-AA1ASB	5/16 (7.9)	1/4 (6.4)	1/4	90 (32.2)	1,430	1,620	1,830	2,050	2,290	2,540	2,800	3,080	3,380	3,690
AE4440Y-AA1ASB	5/16 (7.9)	1/4 (6.4)	1/3	90 (32.2)	1,880	2,100	2,340	2,580	2,830	3,100	3,370	3,650	3,950	4,250

Low Temperature

Model Number	Line Connections in (mm)		HP	Ambient ºF (ºC)	Capacity (Btu/h) at Rated Conditions/ Evaporator Temperature									
	Suction	Liquid			-40°F	-35°F	-30°F	-25°F	-20°F	-15°F	-10°F	-5°F	0°F	5°F
					-40.0°C	-37.2°C	-34.4°C	-31.7°C	-28.9°C	-26.1°C	-23.3°C	-20.6°C	-17.8°C	-15.0°C
R404A/R507 LBP Application Range -40°F to 5°F (-40°C to -15.0°C)														
AE2410Z-AA1ASB	5/16 (7.9)	1/4 (6.4)	1/4	90 (32.2)	410	460	540	630	730	850	980	1,130	1,280	1,450
AE2415Z-AA1ASB	5/16 (7.9)	1/4 (6.4)	1/3	90 (32.2)	550	650	770	910	1,060	1,220	1,380	1,550	1,730	1,910
TPA2411ZAACB	5/16 (7.9)	1/4 (6.4)	1/3	90 (32.2)	820	880	960	1,060	1,170	1,290	1,430	1,590	1,760	1,940
R134a LBP Application Range -40°F to 5°F (-40°C to -15.0°C)														
AE2410Y-AA1ASB	5/16 (7.9)	1/4 (6.4)	1/4	90 (32.2)	270	350	450	560	590	750	910	1,110	1,270	1,440
AE2413Y-AA1BSB	5/16 (7.9)	1/4 (6.4)	1/3	90 (32.2)	470	580	700	830	980	1,140	1,310	1,480	1,670	1,860
R290 LBP Application Range -40°F to 5°F (-40°C to -15.0°C)														
AE2413U-AA1ACK	5/16 (7.9)	1/4 (6.4)	1/3	90 (32.2)	530	650	770	890	1,010	1,180	1,340	1,500	1,680	1,870
AE2420U-AA1ACK	5/16 (7.9)	1/4 (6.4)	1/2	90 (32.2)	840	970	1,110	1,270	1,430	1,610	1,790	1,990	2,190	2,410

**Please check Bill of Material (BOM) to confirm configurations and options that may differ from uniform model numbers above.*

TECUMSEH
EVAP CONDENSATE UNITS

SPECIFICATIONS

Application

Evaporating Ranges:	High Temperature	+10°F to +55°F (-12.2°C to +12.8°C)
	Medium/Comm. Temperature	-5°F to +40°F (-20.6°C to +4.4°C)
	Low Temperature	-40°F to +5°F (-40°C to -15.0°C)
Ambient Operating Temperature:		+80°F (+26.6°C) to +110°F (+43.3°C)

Materials

Valves:	Copper/Steel with Sweat/Flare Connections or with a valve	
Receiver:	Steel, Base Mounted with Copper Sweat Connections or with a valve	
Base Plate:	Grey: Poly Vinyl Choride (PVC)	Black or 10x20: Glass Filled Polypropylene
Refrigerant/Oil:	R134a, R404A/R507 Polyolester (POE)	R22 Synthetic Alkylate (AB)
Electrical Terminations:	Screw	
Fan Guard/Blade:	Polypropylene	
Fan Motor:	Shaded Pole	6 or 9 Watt
Condenser:	Copper Tube and Aluminum Fin	
Electrical Cord:	Length: 20 inches (50.8 mm)	Type: Three Prong, Grounded Plug

Physical Properties

Dimensions:	**Length:**	**Width:**	**Height:**
Grey:	19 inches (483 mm)	9.7 inches (246 mm) with receiver	10.3 inches (262 mm)
	19 inches (483 mm)	8.7 inches (223 mm) without receiver	10.3 inches (262 mm)
Black:	16 3/8 inches (416 mm)	13.0 inches (330 mm)	11.6 inches (295 mm)
10x20	20 inches (508 mm)	10.0 inches (254 mm)	11.6 inches (295 mm)

Connection Type:	Varies by model - see line connections

DIMENSIONS

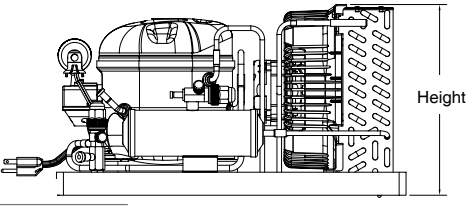

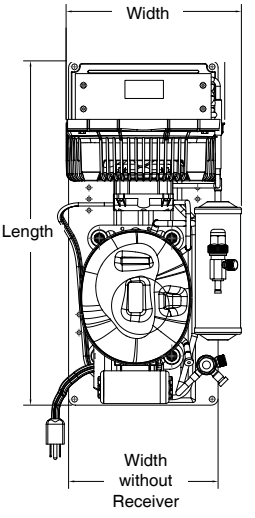

AVAILABLE OPTIONS

Select the Model Designation for Customized Option Configurations

Options Model No (Item No)	Option Configurations
L (29)	Standard unit (Does Not Include Power Cord, Receiver Tank, or Service Valves)
K (39)	Includes Power Cord
B (49)	Includes Power Cord and Receiver Tank
C (59)	Includes Power Cord, Receiver Tank and Service Valves

LOW PROFILE CONDENSING UNIT MODEL NUMBER

AE 4 440 Y - AA 1A G K (AE^2 models only)

AEA 4 440 Y XA G K (All models except AE^2)

Family & Generation
AE^2, AEA, AEB Compressor Series
TPA, TPB Compressor Series

Application Range

3, 4	High	+10°F to +55°F (-12.2°C to +12.8°C)
0, 9, 4*	Comm.	-5°F to +40°F (-20.6°C to +4.4°C) *(AE^2 models only using R404A/R507 and R290)
7	Medium	-5°F to +40°F (-20.6°C to +4.4°C)
1, 2	Low	-40°F to +5°F (-40°C to -15.0°C)

Capacity
First number is total digits. Remainder is capacity in Btu/h.
This example 4000 Btu/h Capacity

Refrigerant
E = R 22 U = R290 Y = R134a Z = R404A/R507

Options: Model (Item No.)
L (29), K (39), B (49), C (59)

Evap Condensate Unit

Voltage/Frequency/Ph
AA 115/60/1
AB 115/60/1; 90/50/1
XA 115/60/1; 100/50/1
XD 208-230/60/1; 200/50/1
XC 220-240/50/1

Efficiency Level

EVAP CONDENSATE UNITS

CELSEON® EVAP CONDENSATE

Commercial Temperature

Model Number	Line Connections^ in (mm)		HP	Ambient ºF (ºC)	Capacity (Btu/h) at Rated Conditions/ Evaporator Temperature									
	Suction	Liquid			-5°F	0°F	5°F	10°F	15°F	20°F	25°F	30°F	35°F	40°F
					-20.6°C	-17.8°C	-15.0°C	-12.2°C	-9.4°C	-6.7°C	-3.9°C	-1.1°C	1.7°C	4.4°C
R404A/R507 CBP Application Range -5°F to 40°F (-20.6°C to 4.4°C)														
AE4425Z-AA1AGB	3/8 (9.5)	1/4 (6.4)	1/5	90 (32.2)	880	1,000	1,120	1,240	1,370	1,500	1,740	1,890	2,040	2,180
AE4430Z-AA1AGB	3/8 (9.5)	1/4 (6.4)	1/4	90 (32.2)	1,010	1,140	1,280	1,420	1,580	1,740	2,030	2,210	2,390	2,570
AE4440Z-AA1AGB	3/8 (9.5)	1/4 (6.4)	1/3	90 (32.2)	1,260	1,420	1,580	1,750	1,920	2,090	2,440	2,620	2,810	2,980
AKA9429ZXAEC	1/2 SAE (12.7 SAE)	1/4 SAE (6.4 SAE)	1/3	90 (32.2)	1,300	1,610	1,920	2,230	2,540	2,850	3,160	3,470	3,780	4,080
R134a CBP Application Range -5°F to 40°F (-20.6°C to 4.4°C)														
THA0370YXAGK	5/16 (7.9)	1/4 (6.4)	1/9	90 (32.2)	420	470	540	620	710	800	900	1,020	1,140	1,260
THA0410YXAGK	5/16 (7.9)	1/4 (6.4)	1/8	90 (32.2)	620	700	800	920	1,050	1,190	1,130	1,490	1,640	1,800
AKA9426YXAEC	1/2 SAE (12.7 SAE)	1/4 SAE (6.4 SAE)	1/3	90 (32.2)	1,200	1,500	1,780	2,050	2,330	2,600	-	-	-	-
R290 CBP Application Range +10°F to 55°F (-12.2°C to 12.7°C)														
THA9416UAAGK	5/16 (7.9)	1/4 (6.4)	1/5	90 (32.2)	1,030	1,160	1,300	1,440	1,590	1,740	1,890	2,050	2,220	2,390
AE4430U-AA1AGK	5/16 (7.9)	1/4 (6.4)	1/4	90 (32.2)	-	-	1,500	1,670	1,850	2,030	2,230	2,440	2,650	2,860
AE4435U-AA1AGK	5/16 (7.9)	1/4 (6.4)	1/4	90 (32.2)	-	-	1,690	1,880	2,080	2,290	2,520	2,750	2,980	3,210
AE4440U-AA1AGK	5/16 (7.9)	1/4 (6.4)	1/3	90 (32.2)	-	-	1,950	2,170	2,400	2,640	2,870	3,110	3,360	3,590
R22† CBP Application Range -5°F to 40°F (-20.6°C to 4.4°C)														
AE4430E-AA1AGB	5/16 (7.9)	1/4 (6.4)	1/4	90 (32.2)	930	1,070	1,230	1,420	1,620	1,840	2,070	2,310	2,550	2,800
AE4450E-AA1BEB	5/16 (7.9)	1/4 (6.4)	1/3	90 (32.2)	1,780	2,010	2,270	2,550	2,850	3,170	3,490	3,810	4,120	4,420

High Temperature

Model Number	Line Connections in (mm)		HP	Ambient ºF (ºC)	Capacity (Btu/h) at Rated Conditions/ Evaporator Temperature									
	Suction	Liquid			10°F	15°F	20°F	25°F	30°F	35°F	40°F	45°F	50°F	55°F
					-12.2°C	-9.4°C	-6.7°C	-3.9°C	-1.1°C	1.7°C	4.4°C	7.2°C	10.0°C	12.8°C
R134a HBP Application Range 10°F to 55°F (-12.2°C to 12.8°C)														
AE3425Y-AA1AGK	5/16 (7.9)	1/4 (6.4)	1/5	90 (32.2)	-	-	1,530	1,730	1,920	2,110	2,290	2,470	2,650	-
AE4430Y-AA1AGC	3/8 (9.5)	1/4 (6.4)	1/4	90 (32.2)	-	-	1,870	2,090	2,310	2,540	2,760	2,990	3,220	-
AE4430Y-XN1AGC	3/8 (9.5)	1/4 (6.4)	1/4	90 (32.2)	-	-	1,890	2,110	2,330	2,570	2,790	3,020	3,250	-
AE4440Y-AA1AGC	3/8 (9.5)	1/4 (6.4)	1/3	90 (32.2)	-	-	2,360	2,610	2,860	3,110	3,370	3,620	3,890	-
AE4440Y-XN1AGC	3/8 (9.5)	1/4 (6.4)	1/3	90 (32.2)	-	-	2,380	2,640	2,890	3,140	3,400	3,660	-	-
AKA4460YXAEE	1/2 SAE (12.7SAE)	1/4 SAE (6.4 SAE)	1/2	90 (32.2)	-	-	3,570	4,000	4,450	4,920	5,390	5,880	-	
AKA4476YXAED	1/2 SAE (12.7SAE)	1/4 SAE (6.4 SAE)	1/2	90 (32.2)	-	-	4,400	4,900	5,400	5,950	6,500	7,100		

Medium Temperature

Model Number	Line Connections in (mm)		HP	Ambient ºF (ºC)	Capacity (Btu/h) at Rated Conditions/ Evaporator Temperature									
	Suction	Liquid			-5°F	0°F	5°F	10°F	15°F	20°F	25°F	30°F	35°F	40°F
					-20.6°C	-17.8°C	-15.0°C	-12.2°C	-9.4°C	-6.7°C	-3.9°C	-1.1°C	1.7°C	4.4°C
R134a MBP Application Range -5°F to 40°F (-20.6°C to 4.4°C)														
AKA7437YXAEC	1/2 SAE (12.7 SAE)	1/4 SAE (6.4 SAE)	1/2	90 (32.2)	1,940	2,250	2,630	3,000	3,400	3,800	4,250	4,700	-	-
AKA7437YXAED	1/2 SAE (12.7 SAE)	1/4 SAE (6.4SAE)	1/2	90 (32.2)	1,940	2,250	2,630	3,000	3,400	3,800	4,250	4,700	3,220	-

Low Temperature

Model Number	Line Connections in (mm)		HP	Ambient ºF (ºC)	Capacity (Btu/h) at Rated Conditions/ Evaporator Temperature									
	Suction	Liquid			-40°F	-35°F	-30°F	-25°F	-20°F	-15°F	-10°F	-5°F	0°F	5°F
					-40.0°C	-37.2°C	-34.4°C	-31.7°C	-28.9°C	-26.1°C	-23.3°C	-20.6°C	-17.8°C	-15.0°C
R404A/R507 LBP Application Range -40°F to 5°F (-40°C to -15.0°C)														
AE2410Z-AA1AGB	5/16 (7.9)	1/4 (6.4)	1/4	90 (32.2)	-	-	430	530	640	760	890	1,020	1,160	1,300
AE2415Z-AA1AGB	5/16 (7.9)	1/4 (6.4)	1/3	90 (32.2)	-	-	820	940	1,070	1,220	1,370	1,530	1,690	1,860
AJA2422ZXAEC	1/2 SAE (12.7 SAE)	1/4 SAE (6.4 SAE)	1/2	90 (32.2)	-	-	1,290	1,500	1,710	1,930	2,180	2,420	2,660	2,910
R134a LBP Application Range -40°F to 5°F (-40°C to -15.0°C)														
AE2410Y-AA1AGB	5/16 (7.9)	1/4 (6.4)	1/4	90 (32.2)	260	340	430	550	570	730	880	1,090	1,220	1,360
AE2413Y-AA1BGB	5/16 (7.9)	1/4 (6.4)	1/3	90 (32.2)	-	-	680	800	930	1,080	1,230	1,400	1,570	1,740
R290 LBP Application Range -40°F to 5°F (-40°C to -15.0°C)														
AE2413U-AA1AGK	5/16 (7.9)	1/4 (6.4)	1/3	90 (32.2)	520	640	750	860	970	1,130	1,280	1,430	1,590	1,760

^ Connections are ODF, unless otherwise stated. † Or compatible equivalent.
** Please check Bill of Material (BOM) to confirm configurations and options that may differ from the uniform model numbers above.*

TECUMSEH
AE², AK/AJ CONDENSING UNITS

SPECIFICATIONS

Application

Evaporating Ranges:	High Temperature:	+10°F to +55°F (-12.2°C to +12.8°C)
	Med./Comm. Temperature:	-5°F to +40°F (-20.6°C to +4.4°C)
	Low Temperature:	-40°F to +5°F (-40°C to -15.0°C)
Ambient Operating Temperature:		+80°F (+26.6°C) to +110°F (+43.3°C)

Materials

Valves:	Steel, Bracket Mounted with Copper Sweat Connections	
Receiver:	Steel, Base Mounted with Copper Sweat Connections	
Base Plate:	Cold Rolled Steel 16 Ga. Galvanized G90U	
Refrigerant/Oil:	R134a, R404A/R507 Polyolester (POE)	R22, R12 compatible Synthetic Alkylate (AB)
Fan Guard:	Polypropylene	
Fan Blade:	Aluminum	
Fan Motor:	Permanent Split Capacitor (PSC) 12, 35, or 50 Watt	
Condenser:	Copper Tube and Aluminum Fin	
Electrical Cord:	Length: 42 inches (1066 mm) Type: Three Prong, Grounded Plug	

Physical Properties

Dimensions:	**Length**	**Width**	**Height**
Small:	15 in (381 mm)	14 in (330 mm)	12 in (304 mm)
Medium:	20 in (508 mm)	14.3 in (330 mm)	12 in (304 mm)
Large:	24 in (609 mm)	17.5 in (734 mm)	13 in (330 mm)

Connection Type:	Suction Line: 5/8 inch (15.9 mm) or 1/2 inch (12.7 mm)ODF Sweat Liquid Line: 1/4 inch (6.3 mm) ODF Sweat- Base unit only (Sm + Med) 3/8 in (9.5 mm) ODF Sweat - All other size and options

DIMENSIONS

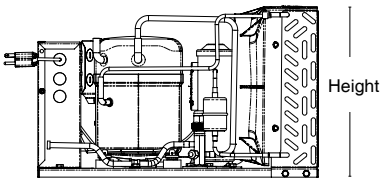

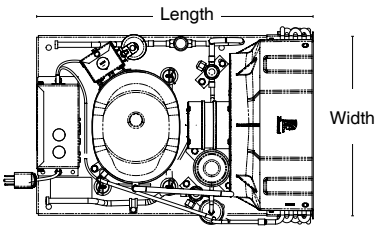

AE², AK/AJ CONDENSING UNIT MODEL NUMBER

AE 4 440 Y - AA 1A D K (AE² models only)

AEA 4 440 Y XA D K (All models except AE²)

Family & Generation
AE², AK, AJ Compressor Series

Application Range

4	High	+10°F to +55°F (-12.2°C to +12.8°C)
4*, 7, 9	Med/Comm	-5°F to +40°F (-20.6°C to +4.4°C)
		*(AE² models only using R404A/R507)
2	Low	-40°F to +5°F (-40°C to -15.0°C)

Capacity
First number is total digits. Remainder is capacity in Btu/h.
This example 4000 Btu/h Capacity

Refrigerant
A = R12 E = R22 Y = R134a Z = R404A/R507

Options: Model (Item No.)
A (09), H (29), G (19), J (79) with no power cord
K (39), S (69), C (59), P (89) with power cord

Fan Motor/Efficiency
D Permanent Split Capacitor Motor (PSC)

Voltage/Frequency/Phase
AA 115/60/1
NA 208-230/60/1

Efficiency Level

TECUMSEH
AE², AK/AJ CONDENSING UNITS

CELSEON® AE², AK/AJ CONDENSING UNIT

Commercial Temperature

Model Number	Line Connections^ in (mm)		HP	Ambient ºF (ºC)	Capacity (Btu/h) at Rated Conditions/ Evaporator Temperature									
	Suction	Liquid			-5°F	0°F	5°F	10°F	15°F	20°F	25°F	30°F	35°F	40°F
					-20.6°C	-17.8°C	-15.0°C	-12.2°C	-9.4°C	-6.7°C	-3.9°C	-1.1°C	1.7°C	4.4°C
R404A/R507 CBP Application Range -5°F to 40°F (-20.6°C to 4.4°C)														
AKA9430ZAADK/A	3/8 (9.5)	1/4 (6.4)	1/3	90 (32.2)	-	1,970	2,240	2,510	2,790	3,090	3,400	3,720	4,060	4,400
AKA9430ZNADK/A	3/8 (9.5)	1/4 (6.4)	1/3	90 (32.2)	-	1,970	2,240	2,510	2,790	3,090	3,400	3,720	4,060	4,400
AKA9442ZAADK/A	3/8 (9.5)	1/4 (6.4)	1/2	90 (32.2)	-	2,680	3,170	3,670	4,180	4,240	5,150	5,590	5,980	6,280
AKA9442ZNADK/A	3/8 (9.5)	1/4 (6.4)	1/2	90 (32.2)	-	2,680	3,170	3,670	4,180	4,240	5,150	5,590	5,980	6,280
AKA9457ZAADK/A	3/8 (9.5)	3/8 (9.5)	3/4	90 (32.2)	-	3,770	4,190	4,650	5,160	5,710	6,300	6,940	7,620	8,350
AKA9457ZNADK/A	3/8 (9.5)	3/8 (9.5)	3/4	90 (32.2)	-	3,770	4,190	4,650	5,160	5,710	6,300	6,940	7,620	8,350
AKA9463ZAADK/A	3/8 (9.5)	3/8 (9.5)	3/4	90 (32.2)	-	4,290	4,750	5,250	5,790	6,360	6,970	7,610	8,290	9,010
AKA9463ZNADK/A	3/8 (9.5)	3/8 (9.5)	3/4	90 (32.2)	-	4,290	4,750	5,250	5,790	6,360	6,970	7,610	8,290	9,010
R22† CBP Application Range -5°F to 40°F (-20.6°C to 4.4°C)														
AKA9435EAADK/A	3/8 (9.5)	1/4 (6.4)	1/2	90 (32.2)	1,850	2,120	2,430	2,760	3,120	3,510	3,930	4,370	4,850	5,350
AKA9435ENADK/A	3/8 (9.5)	1/4 (6.4)	1/2	90 (32.2)	1,850	2,120	2,430	2,760	3,120	3,510	3,930	4,370	4,850	5,350
AKA9446EAADK/A	3/8 (9.5)	1/4 (6.4)	1/2	90 (32.2)	2,200	2,600	3,050	3,500	4,050	4,600	5,150	5,700	6,300	6,900
AKA9446ENADK/A	3/8 (9.5)	1/4 (6.4)	1/2	90 (32.2)	2,200	2,600	3,050	3,500	4,050	4,600	5,150	5,700	6,300	6,900
AKA9461ENADK/A	3/8 (9.5)	3/8 (9.5)	3/4	90 (32.2)	3,000	3,500	4,100	4,700	5,400	6,100	6,900	7,700	8,500	9,300
AKA9470ENADK/A	3/8 (9.5)	3/8 (9.5)	3/4	90 (32.2)	3,800	4,300	5,000	5,600	6,300	7,000	7,800	8,500	9,300	10,100
AJA9486ENADK/A	3/8 (9.5)	3/8 (9.5)	1	90 (32.2)	4,300	5,100	5,900	6,800	7,700	8,600	9,500	10,400	11,400	12,400

† Or compatible equivalent.

High Temperature

Model Number	Line Connections^ in (mm)		HP	Ambient ºF (ºC)	Capacity (Btu/h) at Rated Conditions/ Evaporator Temperature									
	Suction	Liquid			10°F	15°F	20°F	25°F	30°F	35°F	40°F	45°F	50°F	55°F
					-12.2°C	-9.4°C	-6.7°C	-3.9°C	-1.1°C	1.7°C	4.4°C	7.2°C	10.0°C	12.8°C
R404A/R507 HBP Application Range +10°F to 55°F (-12.2°C to 12.7°C)														
AE4450Z-AA1ADK/A	5/16 (7.9)	1/4 (6.4)	1/2	90 (32.2)	-	-	1,840	2,030	2,250	2,490	2,750	3,030	3,320	3,620
AE4470Z-AA3CDK/A	3/8 (9.5)	1/4 (6.4)	1/2	90 (32.2)	-	-	2,500	2,800	3,110	3,450	3,810	4,180	4,560	4,950
R134a HBP Application Range +10°F to 55°F (-12.2°C to 12.7°C)														
AE4450Y-AA1ADK/A	5/16 (7.9)	1/4 (6.4)	1/2	90 (32.2)	-	-	1,400	1,620	1,860	2,120	2,410	2,710	3,020	3,480
AE4456Y-AA1CDK/A	3/8 (9.5)	1/4 (6.4)	1/2	90 (32.2)	-	-	1,550	1,810	2,090	2,380	2,680	2,990	3,310	3,780
AE4460Y-AA3CDK/A	3/8 (9.5)	1/4 (6.4)	1/2	90 (32.2)	-	-	1,440	1,710	2,000	2,320	2,650	3,000	3,490	3,900
AKA4457YAADK/A	3/8 (9.5)	1/4 (6.4)	1/2	90 (32.2)	-	-	3,500	3,920	4,330	4,750	5,170	5,670	6,020	6,440
AKA4457YNADK/A	3/8 (9.5)	1/4 (6.4)	1/2	90 (32.2)	-	-	3,500	3,920	4,330	4,750	5,170	5,670	6,020	6,440
AKA4472YAADK/A	3/8 (9.5)	1/4 (6.4)	1/2	90 (32.2)	-	-	4,430	4,960	5,500	6,050	6,620	7,190	7,770	8,360
AKA4472YNADK/A	3/8 (9.5)	1/4 (6.4)	1/2	90 (32.2)	-	-	4,430	4,960	5,500	6,050	6,620	7,190	7,770	8,360
AJA4480YAADK/A	3/8 (9.5)	1/4 (6.4)	3/4	90 (32.2)	-	-	4,790	5,330	5,870	6,410	6,950	7,550	7,990	-
AJA4480YXNADK/A	3/8 (9.5)	1/4 (6.4)	3/4	90 (32.2)	-	-	4,790	5,330	5,870	6,410	6,950	7,550	7,990	-

^ Connections are ODF, unless otherwise stated. † Or compatible equivalent.
** Please check Bill of Material (BOM) to confirm configurations and options that may differ from the uniform model numbers above.*

TECUMSEH
AE2, AK/AJ CONDENSING UNITS

CELSEON® AE2, AK/AJ CONDENSING UNIT

Medium Temperature

Model Number	Line Connections in (mm)		HP	Ambient ºF (ºC)	Capacity (Btu/h) at Rated Conditions/ Evaporator Temperature									
	Suction	Liquid			-5°F	0°F	5°F	10°F	15°F	20°F	25°F	30°F	35°F	40°F
					-20.6°C	-17.8°C	-15.0°C	-12.2°C	-9.4°C	-6.7°C	-3.9°C	-1.1°C	1.7°C	4.4°C
R404A/R507 MBP Application Range -5°F to 40°F (-20.6°C to 4.4°C)														
AJA7480ZNADK/A	3/8 (9.5)	3/8 (9.5)	1	90 (32.2)	5,180	5,760	6,330	6,880	7,420	7,940	8,450	9,140	9,420	-
R134a MBP Application Range -5°F to 40°F (-20.6°C to 4.4°C)														
AKA7437YAADK/A	3/8 (9.5)	1/4 (6.4)	1/2	90 (32.2)	1,840	2,180	2,540	2,910	3,290	3,750	4,080	4,660	4,920	-
AJA7455YAADK/A	3/8 (9.5)	1/4 (6.4)	3/4	90 (32.2)	2,910	3,410	3,910	4,440	4,980	5,540	6,120	6,710	7,320	-
AJA7455YNADK/A	3/8 (9.5)	1/4 (6.4)	3/4	90 (32.2)	2,910	3,410	3,910	4,440	4,980	5,540	6,120	6,710	7,320	-

Low Temperature

Model Number	Line Connections in (mm)		HP	Ambient ºF (ºC)	Capacity (Btu/h) at Rated Conditions/ Evaporator Temperature									
	Suction	Liquid			-40°F	-35°F	-30°F	-25°F	-20°F	-15°F	-10°F	-5°F	0°F	5°F
					-40.0°C	-37.2°C	-34.4°C	-31.7°C	-28.9°C	-26.1°C	-23.3°C	-20.6°C	-17.8°C	-15.0°C
R404A/R507 LBP Application Range -40°F to 5°F (-40°C to -15.0°C)														
AJA2423ZAADK/A	3/8 (9.5)	1/4 (6.4)	1/2	90 (32.2)	820	1,030	1,250	1,490	1,730	1,990	2,310	2,570	2,820	3,120
AE2425Z-AA3CDK/A	5/16 (7.9)	5/16 (7.9)	3/4	90 (32.2)	990	1,180	1,390	1,610	1,850	2,100	2,440	2,640	2,920	3,210
AKA2430ZAADK/A	3/8 (9.5)	1/4 (6.4)	3/4	90 (32.2)	820	1,150	1,490	1,850	2,220	2,600	3,000	3,360	3,750	4,130
AJB2439ZAADK/A	3/8 (9.5)	1/4 (6.4)	1	90 (32.2)	1,750	2,070	2,410	2,770	3,140	3,520	3,900	4,280	4,640	4,990
AJB2447ZNADK/A	3/8 (9.5)	1/4 (6.4)	1-1/4	90 (32.2)	2,090	2,460	2,860	3,280	3,730	4,190	4,650	5,110	5,550	5,970
R134a LBP Application Range -40°F to 5°F (-40°C to -15.0°C)														
AE2413U-AA1AGK	5/16 (7.9)	1/4 (6.4)	1/2	90 (32.2)	160	360	740	1,120	1,520	1,920	2,320	2,720	3,110	3,490

^ *Connections are ODF, unless otherwise stated.*
* *Please check Bill of Material (BOM) to confirm configurations and options that may differ from the uniform model numbers above.*

AJ CONDENSING UNITS

SPECIFICATIONS

Application

Evaporating Ranges:	High Temperature:	+10°F to +55°F (-12.2°C to +12.8°C)
	Med./Comm. Temperature:	-5°F to +40°F (-20.6°C to +4.4°C)
	Low Temperature:	-40°F to +5°F (-40°C to -15.0°C)
Ambient Operating Temperature:		+80°F (+26.6°C) to +110°F (+43.3°C)

Materials

Valves:	Steel, Bracket Mounted with Copper Sweat Connections	
Receiver:	Steel, Base Mounted with Copper Sweat Connections	
Base Plate:	Cold Rolled Steel 16 Ga. Galvanized G90U	
Refrigerant/Oil:	R134a, R404A/R507 Polyolester (POE)	R12 Synthetic Alkylate (AB)
Fan Guard:	Polypropylene	
Fan Blade:	Aluminum	
Fan Motor:	Permanent Split Capacitor (PSC) 35 Watt	
Condenser:	Copper Tube and Aluminum Fin	
Electrical Cord:	Length: 42 inches (1066 mm) Type: Three Prong, Grounded Plug	

Physical Properties

Dimensions:	**Length**	**Width**	**Height**
Medium:	20 in (508 mm)	14.3 in (330 mm)	12.1 in (307 mm)
Connection Type:	Suction Line: 5/8 inch (15.9 mm) ODF Sweat Liquid Line: 3/8 inch (9.5 mm) ODF Sweat		

DIMENSIONS

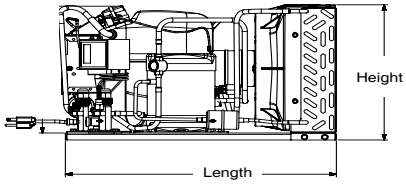

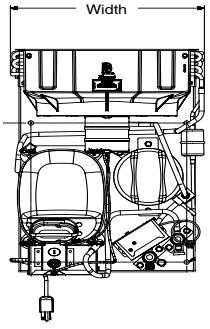

AJ CONDENSING UNIT MODEL NOMENCLATURE

AJA 4 457 Y AA D C

- **Family & Generation** — AJ Compressor Series
- **Application Range**
  - 4 High +10°F to +55°F (-12.2°C to +12.8°C)
  - 7, 9 Med/Comm. -5°F to +40°F (-20.6°C to +4.4°C)
  - 2 Low -40°F to +5°F (-40°C to -15.0°C)
- **Capacity** — First number is total digits. Remainder is capacity in Btu/h. This example 5700 Btu/h Capacity
- **Refrigerant** — E = R 22 Y = R134a Z = R404A/R507
- **Voltage/Frequency/Phase**
  - AA 115/60/1
  - NA 208-230/60/1
- **Fan Motor/Efficiency**
  - D Permanent Split Capacitor (PSC)
- **Options** — With power cords: C, P

High Temperature

Model Number	Line Connections^ in (mm)		HP	Ambient °F (°C)	Capacity (Btu/h) at Rated Conditions/ Evaporator Temperature									
	Suction	Liquid			10°F	15°F	20°F	25°F	30°F	35°F	40°F	45°F	50°F	55°F
					-12.2°C	-9.4°C	-6.7°C	-3.9°C	-1.1°C	1.7°C	4.4°C	7.2°C	10.0°C	12.8°C
R134a HBP Application Range 10°F to 55°F (-12.2°C to 12.8°C)														
AJA4480YAADC	5/8 (15.9)	3/8 (9.5)	3/4	90 (32.2)	-	-	4,790	5,330	5,870	6,410	6,950	7,550	7,990	-
AJA4480YNADC	5/8 (15.9)	3/8 (9.5)	3/4	90 (32.2)	-	-	4,790	5,330	5,870	6,410	6,950	7,550	7,990	-

Medium Temperature

Model Number	Line Connections^ in (mm)		HP	Ambient °F (°C)	Capacity (Btu/h) at Rated Conditions/ Evaporator Temperature									
	Suction	Liquid			-5°F	0°F	5°F	10°F	15°F	20°F	25°F	30°F	35°F	40°F
					-20.6°C	-17.8°C	-15.0°C	-12.2°C	-9.4°C	-6.7°C	-3.9°C	-1.1°C	1.7°C	4.4°C
R134a MBP Application Range -5°F to 40°F (-20.6°C to 4.4°C)														
AJA7455YAADC	5/8 (15.9)	3/8 (9.5)	3/4	90 (32.2)	2,440	2,910	3,410	3,910	4,440	4,980	5,540	6,120	6,710	7,320
AJA7455YNADC	5/8 (15.9)	3/8 (9.5)	3/4	90 (32.2)	2,440	2,910	3,410	3,910	4,440	4,980	5,540	6,120	6,710	7,320

Low Temperature

Model Number	Line Connections^ in (mm)		HP	Ambient °F (°C)	Capacity (Btu/h) at Rated Conditions/ Evaporator Temperature									
	Suction	Liquid			-40°F	-35°F	-30°F	-25°F	-20°F	-15°F	-10°F	-5°F	0°F	5°F
					-40.0°C	-37.2°C	-34.4°C	-31.7°C	-28.9°C	-26.1°C	-23.3°C	-20.6°C	-17.8°C	-15.0°C
R404A/R507 LBP Application Range -40°F to 5°F (-40°C to -15°C)														
AJA2431ZAADC	5/8 (15.9)	3/8 (9.5)	3/4	90 (32.2)	670	1,060	1,480	1,890	2,320	2,750	3,180	3,600	4,010	4,390

^ Connections are ODF, unless otherwise stated. † Or compatible equivalent.
** Please check Bill of Material (BOM) to confirm configurations and options that may differ from the uniform model numbers above.*

TECUMSEH VSC SCROLLS

SPECIFICATIONS

Applications

Evaporating Ranges:	Commercial Temperature:	-5°F to +40°F (-20.6°C to +4.4°C)
	Low Temperature:	-40°F to +5°F (-40°C to -15.0°C)
Ambient Operating Temp:		+80°F (+26.6°C) to +110°F (+43.3°C)

Materials

Valves:	Steel, Rotolock x Copper Sweat Connections
Receiver:	Steel, Base Mounted Vertical with Rotolock Valve connection Horizontal with Copper Sweat Connections
Base Plate:	Cold Rolled Steel 16 Ga. Galvanized G90U
Refrigerant/Oil:	R404A/R507 Polyvinylether (PVE)
Fan Guard:	Wire
Fan Blade:	Aluminum
Fan Motor:	Permanent Split Capacitor (PSC) 50 Watts or 1/4 Horse Power
Condenser:	Copper Tube and Aluminum Fin

Physical Properties

	Length	Width	Height
Small:	34 in (364 mm)	25 in (635mm)	20 in (508 mm)
Large:	45 in (1143 mm)	29 in (737 mm)	27 in (686 mm)

Connection Type:	Suction Line: 5/8 inch (15.9 mm) ODF Sweat 7/8 inch (22.2 mm) ODF Sweat or 1 1/8 (28.6 mm) ODF Sweat (VSC2533 model only) Liquid Line: 3/8 inch (9.5 mm) ODF Sweat 1/2 inch (17.7 mm) ODF Sweat

DIMENSIONS

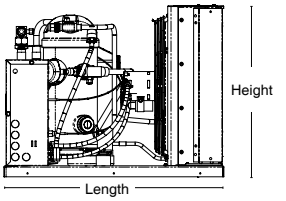

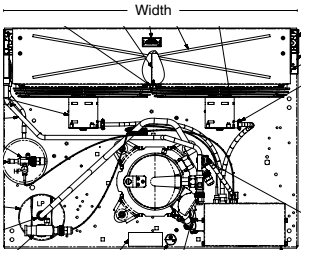

VSC SCROLL CONDENSING UNIT MODEL NOMENCLATURE

VSC 9 518 Z NA XM

Family & Generation
VSC Series

Application Range
9 Commercial -5°F to +40°F (-20.6°C to +7.2°C)
2 Low -40°F to +5°F (-40°C to -15.0°C)

Capacity
First number is total digits, remainder is capacity in Btu/h
This example 18,000 Btu/h Capacity

Release Variant
Receiver Tank, BX cable and Accumulator

Voltage/Frequency/Phase
NA 208-230/60/1
XT 200-230/60/3; 200-220/50/3

Refrigerant
Z = R404A, R507

Commercial Temperature

Model Number	Line Connections^ in (mm)		HP	Ambient ºF (ºC)	Capacity (Btu/h) at Rated Conditions/ Evaporator Temperature									
	Suction	Liquid			-5°F	0°F	5°F	10°F	15°F	20°F	25°F	30°F	35°F	40°F
					-20.6°C	-17.8°C	-15.0°C	-12.2°C	-9.4°C	-6.7°C	-3.9°C	-1.1°C	1.7°C	4.4°C
R404A/R507 CBP Application Range -5°F to 40°F (-20.6°C to 4.4°C)														
VSC9518ZNAXM	5/8 (15.9)	3/8 (9.5)	2	90 (32.2)	7,500	9,700	11,850	13,960	16,030	18,040	20,010	21,940	23,810	25,630
VSC9522ZNAXM	5/8 (15.9)	3/8 (9.5)	3	90 (32.2)	12,910	14,250	15,930	17,870	20,020	22,310	24,660	27,030	29,330	31,510
VSC9524ZNAXM	5/8 (15.9)	3/8 (9.5)	3	90 (32.2)	14,070	15,530	17,390	19,560	22,010	24,670	27,490	30,400	33,360	36,300
VSC9529ZNAXM	7/8 (22.2)	1/2 (12.7)	4	90 (32.2)	17,310	19,160	21,440	24,080	27,000	30,150	33,440	36,810	40,190	43,490
VSC9534ZNAXM	7/8 (22.2)	1/2 (12.7)	4-1/2	90 (32.2)	20,500	22,590	25,240	28,370	31,870	35,660	39,650	43,740	47,840	51,860

Low Temperature

Model Number	Line Connections^ in (mm)		HP	Ambient ºF (ºC)	Capacity (Btu/h) at Rated Conditions/ Evaporator Temperature									
	Suction	Liquid			-40°F	-35°F	-30°F	-25°F	-20°F	-15°F	-10°F	-5°F	0°F	5°F
					-40.0°C	-37.2°C	-34.4°C	-31.7°C	-28.9°C	-26.1°C	-23.3°C	-20.6°C	-17.8°C	-15.0°C
R404A/R507 LBP Application Range -40°F to 5°F (-40.6°C to -15.0°C)														
VSC2518ZXTXM	7/8 (22.2)	1/2 (12.7)	4-1/2	90 (32.2)	10,360	11,760	13,290	14,940	16,700	18,560	20,510	22,540	24,630	26,780
VSC2522ZXTXM	7/8 (22.2)	1/2 (12.7)	5-1/2	90 (32.2)	12,540	14,190	16,020	17,990	20,090	22,320	24,650	27,070	29,570	32,120
VSC2527ZXTXM	7/8 (22.2)	1/2 (12.7)	7	90 (32.2)	15,060	17,020	19,230	21,660	24,290	27,090	30,050	33,150	36,340	39,630
VSC2533ZXTXM	1-1/8 (28.6)	1/2 (12.7)	8	90 (32.2)	18,560	20,940	23,620	26,540	29,680	33,000	36,450	40,010	43,630	47,270

^ Connections are ODF, unless otherwise stated.
** Please check Bill of Material (BOM) to confirm configurations and options that may differ from the uniform model numbers above.*

TECUMSEH LARGE RECIPROCATING

SPECIFICATIONS

Applications

Evaporating Ranges:	High Temperature:	-10°F to +55°F (-12.2°C to +12.8°C)
	Med./Comm. Temperature:	-5°F to +40°F (-20.6°C to +4.4°C)
	Low (Vapor Injection) Temp:	-40°F to +5°F (-40°C to -15.0°C)
Ambient Operating Temp:		+80°F (+26.6°C) to +110°F (+43.3°C)

Materials

Base Plate:	Steel, Hot Rolled and Painted or Cold Rolled Galvanized G90U; 16 Ga.	
Refrigerant/Oil:	R404A/R507, R407C Polyolester (POE)	R22, R12 Synthetic Alkylate (AB)
Fan Guard:	Wire	
Fan Blade:	Aluminum	
Fan Motor:	Permanent Split Capacitor (PSC)	
Condenser:	Copper Tube and Aluminum Fin	

Physical Properties

Dimensions:	Vary by model - see pages 58-59
Connection Type:	Vary by model - see pages 49-51

DIMENSIONS

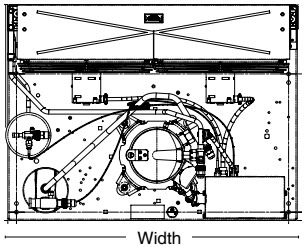

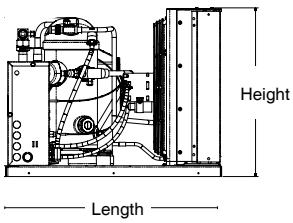

CONDENSING UNIT RELEASE VARIANT CODES

Air Cooled Condensing Units		Air Fan Cooled	Receiver Tank	BX Cable	See Item No. / (BOM)*	Accumulator
XA	Standard Unit	•				
XB	Std. Unit W/Receiver Tank	•	•			
XC	Std. Unit W/Receiver Tank & BX Cable	•	•	•		
XD	Std. Unit W/BX Cable	•		•		
XE,XF,XK	Physical Design Variant (Conduit)	•		•	•	
XG,XH,XJ,XL,XP	Physical Design Variant (Standard)	•			•	
XM	Advanced Commercial Design	•	•	•		•
XN	Advanced Commercial Design	•		•		•

*Note: See Item No./Bill of Material (BOM) must be referred to in order to determine other features not represented in the model nomenclature or release varient codes.

LARGE RECIPROCATING MODEL NOMENCLATURE

AWA 2 490 Z XD XG

Family & Generation
AW, AV, AG, AH Compressor Series

Application Range

4	High	+10°F to +55°F (-12.2°C to +12.8°C)
7, 9	Medium/Comm.	-5°F to +40°F (-20.6°C to +4.4°C)
2	Low	-40°F to +5°F (-40.0°C to -15.0°C)

Capacity
First number is total digits, the remainder is capacity in Btu/h.
This example 9000 Btu/h capacity.

Refrigerant

Release Variant

Voltage/Frequency/Phase

XD	208-230/60/1; 200/50/1
XN	208-230/60/1; 200-220/50/1
XT	200-230/60/3; 200-220/50/3
XG	460/60/3; 380-420/50/3
XF	208-230/60/3; 200-240/50/3

TECUMSEH LARGE RECIPROCATING

Commercial Temperature

Model Number	Line Connections^ in (mm)		HP	Ambient °F (°C)	Capacity (Btu/h) at Rated Conditions/ Evaporator Temperature									
	Suction	Liquid			-5°F	0°F	5°F	10°F	15°F	20°F	25°F	30°F	35°F	40°F
					-20.6°C	-17.8°C	-15.0°C	-12.2°C	-9.4°C	-6.7°C	-3.9°C	-1.1°C	1.7°C	4.4°C
R404A/R507 CBP Application Range -5°F to 40°F (-20.6°C to 4.4°C)														
AWA9511ZXNXC	7/8 (22.2)	3/8 (9.5)	1	90 (32.2)	5,700	6,600	7,500	8,500	9,600	10,800	12,000	13,200	14,600	16,000
AWA9511ZXTXC	7/8 (22.2)	3/8 (9.5)	1	90 (32.2)	5,700	6,600	7,500	8,500	9,600	10,800	12,000	13,200	14,600	16,000
AWA9511ZXGXC	7/8 SAE (22.2 SAE)	3/8 SAE (9.5 SAE)	1	90 (32.2)	5,700	6,600	7,500	8,500	9,600	10,800	12,000	13,200	14,600	16,000
AWA9514ZXTXM	7/8 (22.2)	3/8 (9.5)	1-3/4	90 (32.2)	7,500	8,500	9,700	11,100	12,500	14,100	15,800	17,500	19,400	21,400
AWA9514ZXNXM	7/8 (22.2)	3/8 (9.5)	1-3/4	90 (32.2)	7,500	8,500	9,700	11,100	12,500	14,100	15,800	17,500	19,400	21,400
AWA9518ZXNXM	7/8 (22.2)	3/8 (9.5)	2-1/2	90 (32.2)	10,000	11,400	13,000	14,600	16,500	18,400	20,600	22,700	25,000	27,500
AWA9518ZXTXM	7/8 (22.2)	3/8 (9.5)	2-1/2	90 (32.2)	10,000	11,400	13,000	14,600	16,500	18,400	20,600	22,700	25,000	27,500
AVA9523ZXGXM	7/8 (22.2)	3/8 (9.5)	3	90 (32.2)	12,200	14,000	15,900	18,000	20,200	22,500	25,000	27,500	30,300	33,100
AVA9523ZXTXM	7/8 (22.2)	3/8 (9.5)	3	90 (32.2)	12,200	14,000	15,900	18,000	20,200	22,500	25,000	27,500	30,300	33,100
AVA9525ZXGXM	7/8 (22.2)	3/8 (9.5)	3	90 (32.2)	13,900	15,800	17,800	19,900	22,100	24,500	27,000	29,700	32,500	35,400
AVA9525ZXTXM	7/8 (22.2)	3/8 (9.5)	3	90 (32.2)	13,900	15,800	17,800	19,900	22,100	24,500	27,000	29,700	32,500	35,400
AVA9529ZXTXM	7/8 (22.2)	3/8 (9.5)	3-1/2	90 (32.2)	17,200	19,300	21,500	23,900	26,300	28,900	31,600	34,400	37,400	40,400

High Temperature

Model Number	Line Connections in (mm)		HP	Ambient °F (°C)	Capacity (Btu/h) at Rated Conditions/ Evaporator Temperature									
	Suction	Liquid			10°F	15°F	20°F	25°F	30°F	35°F	40°F	45°F	50°F	55°F
					-12.2°C	-9.4°C	-6.7°C	-3.9°C	-1.1°C	1.7°C	4.4°C	7.2°C	10.0°C	12.8°C
R407C HBP Application Range 10°F to 55°F (-12.2°C to 12.8°C)														
AWG4517CXNXC	7/8 (22.2)	3/8 (9.5)	1-1/2	90 (32.2)	7,100	8,400	9,700	11,100	12,500	14,000	15,400	17,000	18,500	20,100
AWG4520CXNXM	7/8 (22.2)	3/8 (9.5)	1-1/2	90 (32.2)	7,100	8,400	9,700	11,100	12,500	14,000	15,400	17,000	18,500	20,100
AWG4520CXNXM	7/8 (22.2)	3/8 (9.5)	1-3/4	90 (32.2)	7,500	8,800	10,200	11,900	13,700	15,700	17,800	20,200	22,700	25,400
AE4430Y-XN1AGC	7/8 (22.2)	3/8 (9.5)	2	90 (32.2)	11,800	13,800	15,900	18,100	20,400	22,800	25,300	27,800	30,400	33,200
AVA4536CXTXM	7/8 (22.2)	3/8 (9.5)	3	90 (32.2)	16,600	19,200	21,800	24,500	27,300	30,100	33,000	36,000	39,000	42,100
AGA4549CXTXM	7/8 SAE (22.2 SAE)	1/2 SAE (12.7 SAE)	4	90 (32.2)	19,800	23,400	27,100	31,000	35,100	39,400	43,900	48,600	53,500	58,600
AGA4562CXTXM	7/8 SAE (22.2 SAE)	1/2 SAE (12.7 SAE)	5	90 (32.2)	25,600	30,900	36,100	41,300	46,500	51,600	56,700	61,800	66,800	71,800
AKA4476YXAED	7/8 (22.2)	1/2 (12.7)	5	90 (32.2)	-	-	36,100	41,300	46,500	51,600	56,700	61,800	66,800	71,800
R22† HBP Application Range 10°F to 55°F (-12.2°C to 12.8°C)														
AWG4516EXNXC	7/8 (22.2)	3/8 (9.5)	1-1/4	90 (32.2)	-	-	9,400	10,500	11,700	13,000	14,300	15,800	17,400	-
AWG4516EXTXC	7/8 (22.2)	3/8 (9.5)	1-1/4	90 (32.2)	7,400	8,300	9,400	10,500	11,700	13,000	14,300	15,800	17,400	19,000
AWG4520EXNXC	7/8 (22.2)	3/8 (9.5)	1-1/2	90 (32.2)	-	-	11,800	13,200	14,600	16,100	17,600	19,100	20,700	22,300
AWG4520EXTXC	7/8 (22.2)	3/8 (9.5)	1-1/2	90 (32.2)	-	-	11,800	13,200	14,600	16,100	17,600	19,100	20,700	22,300
AWG4524EXNXM	7/8 (22.2)	3/8 (9.5)	2	90 (32.2)	-	-	14,700	16,400	18,200	20,100	22,100	24,200	26,400	28,600
AWG4524EXTXM	7/8 (22.2)	3/8 (9.5)	2	90 (32.2)	-	-	14,700	16,400	18,200	20,100	22,100	24,200	26,400	28,600
AWG4530EXGXM	7/8 (22.2)	3/8 (9.5)	2-1/2	90 (32.2)	-	-	18,600	20,800	23,000	25,400	27,800	30,400	33,000	35,800
AWG4530EXNXM	7/8 (22.2)	3/8 (9.5)	2-1/2	90 (32.2)	-	-	18,600	20,800	23,000	25,400	27,800	30,400	33,000	35,800
AWG4530EXTXM	7/8 (22.2)	3/8 (9.5)	2-1/2	90 (32.2)	-	-	18,600	20,800	23,000	25,400	27,800	30,400	33,000	35,800
AVA4540EXNXM	7/8 (22.2)	3/8 (9.5)	3-1/2	90 (32.2)	19,600	22,200	24,500	27,500	30,500	33,500	36,600	39,800	43,000	46,300
AVA4540EXTXM	7/8 (22.2)	3/8 (9.5)	3-1/2	90 (32.2)	-	-	24,500	27,500	30,500	33,500	36,600	39,800	43,000	46,300
AGA4553EXNXM	7/8 SAE (22.2 SAE)	1/2 SAE (12.7 SAE)	4-1/2	90 (32.2)	-	-	35,000	38,300	41,500	25,400	9,200	53,000	56,000	-
AGA4553EXTXM	7/8 SAE (22.2 SAE)	1/2 SAE (12.7 SAE)	4-1/2	90 (32.2)	-	-	35,000	38,300	41,500	25,400	9,200	53,000	56,000	-
AGA4563EXNXM	7/8 SAE (22.2 SAE)	1/2 SAE (12.7 SAE)	5	90 (32.2)	-	-	42,000	46,000	50,000	54,000	58,000	62,500	65,300	-
AGA4563EXTXM	7/8 SAE (22.2 SAE)	1/2 SAE (12.7 SAE)	5	90 (32.2)	-	-	42,000	46,000	50,000	54,000	58,000	62,500	65,300	-
AGA4572EXNXM	7/8 SAE (22.2 SAE)	1/2 SAE (12.7 SAE)	6	90 (32.2)	-	-	44,000	49,500	55,000	61,000	67,000	72,000	80,000	-
AGA4572EXTXM	7/8 SAE (22.2 SAE)	1/2 SAE (12.7 SAE)	6	90 (32.2)	-	-	44,000	49,500	55,000	61,000	67,000	72,000	80,000	-

^ Connections are ODF, unless otherwise stated. † Or compatible equivalent.
** Please check Bill of Material (BOM) to confirm configurations and options that may differ from the uniform model numbers above.*

TECUMSEH LARGE RECIPROCATING

LARGE RECIPROCATING

Medium Temperature

Model Number	Line Connections^ in (mm)		HP	Ambient ºF (ºC)	Capacity (Btu/h) at Rated Conditions/ Evaporator Temperature									
	Suction	Liquid			-5°F	0°F	5°F	10°F	15°F	20°F	25°F	30°F	35°F	40°F
					-20.6°C	-17.8°C	-15.0°C	-12.2°C	-9.4°C	-6.7°C	-3.9°C	-1.1°C	1.7°C	4.4°C
R404A/R507 MBP Application Range -5°F to 40°F (-20.6°C to 4.4°C)														
AWA7512ZXDXC	7/8 (22.2)	3/8 (9.5)	1-1/2	90 (32.2)	6,800	7,700	8,700	9,700	10,800	11,900	13,100	14,400	-	-
AWA7512ZXTXC	7/8 (22.2)	3/8 (9.5)	1-1/2	90 (32.2)	6,800	7,700	8,700	9,700	10,800	11,900	13,100	14,400	-	-
AWA7515ZXDXC	7/8 (22.2)	3/8 (9.5)	1-3/4	90 (32.2)	8,900	9,900	10,900	12,000	13,200	14,400	15,700	17,000	-	-
AWA7515ZXTXC	7/8 (22.2)	3/8 (9.5)	1-3/4	90 (32.2)	8,900	9,900	10,900	12,000	13,200	14,400	15,700	17,000	-	-
AVA7523ZXNXC	7/8 (22.2)	3/8 (9.5)	3	90 (32.2)	13,600	15,400	17,100	19,000	20,900	22,800	24,800	26,800	-	-
AVA7523ZXTXC	7/8 (22.2)	3/8 (9.5)	3	90 (32.2)	13,600	15,400	17,100	19,000	20,900	22,800	24,800	26,800	-	-

Low Temperature

Model Number	Line Connections^ in (mm)		HP	Ambient ºF (ºC)	Capacity (Btu/h) at Rated Conditions/ Evaporator Temperature									
	Suction	Liquid			-40°F	-35°F	-30°F	-25°F	-20°F	-15°F	-10°F	-5°F	0°F	5°F
					-40.0°C	-37.2°C	-34.4°C	-31.7°C	-28.9°C	-26.1°C	-23.3°C	-20.6°C	-17.8°C	-15.0°C
R404A/R507 LBP Application Range -40°F to 5°F (-40°C to -15.0°C)														
AWA2448ZXDXC	5/8 (15.9)	3/8 (9.5)	1-1/4	90 (32.2)	1,400	1,900	2,400	3,000	3,600	4,200	4,800	5,500	6,200	7,000
AWA2448ZXTXC	5/8 (15.9)	3/8 (9.5)	1-1/4	90 (32.2)	1,400	1,900	2,400	3,000	3,600	4,200	4,800	5,500	6,200	7,000
AWA2457ZXDXC	7/8 (22.2)	3/8 (9.5)	1-1/2	90 (32.2)	1,900	2,500	3,100	3,700	4,400	5,000	5,700	6,500	7,200	8,000
AWA2457ZXTXC	7/8 (22.2)	3/8 (9.5)	1-1/2	90 (32.2)	1,900	2,500	3,100	3,700	4,400	5,000	5,700	6,500	7,200	8,000
AWA2464ZXDXC	7/8 (22.2)	3/8 (9.5)	1-3/4	90 (32.2)	2,600	3,200	3,800	4,400	5,100	5,800	6,500	7,100	7,900	8,600
AWA2464ZXTXC	7/8 (22.2)	3/8 (9.5)	1-3/4	90 (32.2)	2,600	3,200	3,800	4,400	5,100	5,800	6,500	7,100	7,900	8,600
AWA2479ZXDXC	7/8 (22.2)	3/8 (9.5)	2	90 (32.2)	2,300	3,200	4,100	5,000	5,900	6,900	7,900	8,900	9,900	11,000
AWA2479ZXTXC	7/8 (22.2)	3/8 (9.5)	2	90 (32.2)	2,300	3,200	4,100	5,000	5,900	6,900	7,900	8,900	9,900	11,000
AWA2490ZXDXC	5/8 (15.9)	3/8 (9.5)	2	90 (32.2)	-	-	4,100	5,200	6,400	7,600	8,800	10,100	11,400	12,700
AWA2490ZXTXC	5/8 (15.9)	3/8 (9.5)	2	90 (32.2)	-	-	4,100	5,200	6,400	7,600	8,800	10,100	11,400	12,700
AVA2510ZXNXC	7/8 (22.2)	3/8 (9.5)	2-1/2	90 (32.2)	3,600	4,700	5,800	6,800	7,900	8,900	10,000	11,000	12,100	13,100
AVA2510ZXTXC	7/8 (22.2)	3/8 (9.5)	2-1/2	90 (32.2)	3,600	4,700	5,800	6,800	7,900	8,900	10,000	11,000	12,100	13,100
AVA2512ZXNXM	7/8 (22.2)	3/8 (9.5)	3	90 (32.2)	-	5,300	6,500	7,800	9,100	10,500	11,900	13,300	14,800	16,300
AVA2512ZXTXM	7/8 (22.2)	3/8 (9.5)	3	90 (32.2)	-	5,300	6,500	7,800	9,100	10,500	11,900	13,300	14,800	16,300
AVA2515ZXNXC	7/8 (22.2)	3/8 (9.5)	3-1/2	90 (32.2)	5,100	6,400	7,800	9,300	10,900	12,600	14,500	16,400	18,500	20,700
AVA2515ZXTXC	7/8 (22.2)	3/8 (9.5)	3-1/2	90 (32.2)	5,100	6,400	7,800	9,300	10,900	12,600	14,500	16,400	18,500	20,700

^ Connections are ODF, unless otherwise stated. † Or compatible equivalent.
** Please check Bill of Material (BOM) to confirm configurations and options that may differ from the uniform model numbers above.*

LARGE RECIPROCATING DIMENSIONS

CBP Application Range -10°F to 40°F (-23.3°C to 4.4°C)				
Model Number	**Item Number (BOM)**	**Length in (mm)**	**Width in (mm)**	**Height in (mm)**
R404A/R507 CBP				
AWA9511ZXNXC	2B1138-9	24.0 (610)	19.4 (493)	16.2 (411)
AWA9511ZXTXC	2B1140-9	24.0(610)	19.4 (493)	16.2 (411)
AWA9511ZXGXC	32B1141-1	24.0 (610)	19.4 (493)	16.2 (411)
AWA9514ZXTXM	2B3239-9	33.8 (859)	25.0 (635)	19.5 (495)
AWA9514ZXNXM	2B3238-9	25.0 (635)	33.4 (850)	19.5 (495)
AWA9518ZXNXM	2C2133-9	33.8 (859)	25.0 (635)	19.5 (495)
AWA9518ZXTXM	2C2134-9	33.8 (859)	25.0 (635)	19.5 (495)
AVA9523ZXGXM	2C2137-9	33.8 (859)	25.0 (635)	19.5 (495)
AVA9523ZXTXM	2C2136-9	33.8 (859)	25.0 (635)	19.5 (495)
AVA9525ZXGXM	2B3155-9	33.7 (856)	25.0 (635)	19.5 (495)
AVA9525ZXTXM	2B3154-9	25.0 (635)	33.7 (856)	19.5 (495)
AVA9529ZXTXM	2B3158-9	25.0 (635)	33.7 (856)	19.5 (495)

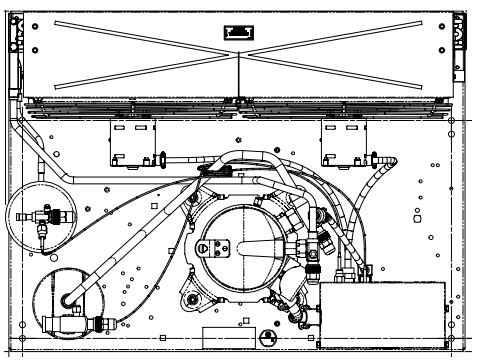

HBP Application Range 20°F to 55°F (-6.7°C to 12.8C)				
Model Number	**Item Number (BOM)**	**Length in (mm)**	**Width in (mm)**	**Height in (mm)**
R404A/R507 HBP				
AWG4517CXNXC	2B3270-1	24.0 (610)	19.4 (493)	16.2 (411)
AWG4517CXNXC	2B3272-1	24.0 (610)	19.4 (493)	16.2 (411)
AWG4520CXNXM	2B3271-1	25.0 (635)	33.4 (850)	19.5 (495)
AWG4528CXNXM	2C2159-1	25.0 (635)	33.4 (850)	19.5 (495)
AVA4536CXTXM	2B3182-1	25.0 (635)	33.4 (850)	19.5 (495)
AGA4549CXTXM	2A4094-1	28.8 (732)	44.9 (1140)	26.9 (683)
AGA4562CXTXM	2A5104-1	28.8 (732)	44.9 (1140)	26.9 (683)
AGA4562CXTXS	2A5102-1	28.7 (729)	45.7 (1161)	26.9 (683)
AVA9523ZXTXM	2C2136-9	33.8 (859)	25.0 (635)	19.5 (495)
AVA9525ZXGXM	2B3155-9	33.7 (856)	25.0 (635)	19.5 (495)
AVA9525ZXTXM	2B3154-9	25.0 (635)	33.7 (856)	19.5 (495)
R22 HBP				
AWG4516EXNXC	2B1112-9	24.0 (610)	19.4 (493)	16.2 (411)
AWG4516EXTXC	2B1113-9	24.0 (610)	19.4 (493)	16.2 (411)
AWG4520EXNXC	2B3215-9	24.0 (610)	19.4 (493)	16.2 (411)
AWG4520EXTXC	2B3216-9	24.0 (610)	19.4 (493)	16.2 (411)
AWG4524EXNXM	2C2103-9	33.5 (851)	25.0 (635)	19.5 (495)
AWG4524EXTXM	2C2108-9	33.5 (851)	25.0 (635)	19.5 (495)
AWG4530EXGXM	2C2110-1	33.48 (850)	25.0 (635)	19.5 (495)
AWG4530EXNXM	2C2106-9	33.5 (851)	25.0 (635)	19.5 (495)
AWG4530EXTXM	2C2107-9	33.5 (851)	25.0 (635)	19.5 (495)
AVA4540EXNXM	2B3127-9	25.0 (635)	33.6 (853)	19.5 (495)
AVA4540EXTXM	2B3128-9	25.0 (635)	33.6 (853)	19.5 (495)
AGA4553EXNXM	2A4052-9	28.6 (726)	44.9 (1140)	26.9 (683)
AGA4553EXTXM	2A4053-9	28.8 (732)	44.9 (1140)	26.9 (683)
AGA4563EXNXM	2A5058-9	28.8 (732)	44.9 (1140)	26.9 (683)
AGA4563EXTXM	2A5059-9	28.6 (726)	44.9 (1140)	26.9 (683)
AGA4572EXNXM	2A5060-9	28.6 (726)	44.9 (1140)	26.9 (683)
AGA4572EXTXM	2A5061-9	28.8 (732)	44.9 (1140)	26.9 (683)
AHA4518AXDXC	2B3233-49	24.9 (632)	17.0 (432)	16.2 (411)

LARGE RECIPROCATING DIMENSIONS

MBP Application Range -10°F to 40°F (-23.3°C to 4.4°C)				
Model Number	**Item Number (BOM)**	**Length in (mm)**	**Width in (mm)**	**Height in (mm)**
R404A/R507 MBP				
AWA7512ZXDXC	2B3217-9	24.0 (610)	19.4 (493)	16.2 (411)
AWA7515ZXTXC	2B3218-9	24.0 (610)	19.4 (493)	16.2 (411)
AWA7515ZXDXC	2B3220-9	24.0 (610)	19.4 (493)	16.2 (411)
AWA7515ZXTXC	2B3219-9	24.0 (610)	19.4 (493)	16.2 (411)
AVA7523ZXNXC	2B3136-9	25.0 (635)	33.5 (851)	19.5 (495)
AVA7523ZXTXC	2B3137-9	25.0 (635)	33.6 (853)	19.5 (495)
AHA7480AXDXC	2B1126-49	25.0 (635)	17.8 (452)	14.6 (371)
AHA7480AXFXC	2B1127-49	24.9 (632)	17.8 (452)	15.6 (396)
AHA7511AXFXC	2B3237-49	24.9 (632)	17.0 (432)	16.2 (411)
AHB7511AXDXC	2B3235-49	24.0 (610)	19.4 (493)	16.2 (411)
AHA7514AXDXC	2B3234-49	24.9 (632)	19.4 (493)	16.2 (411)

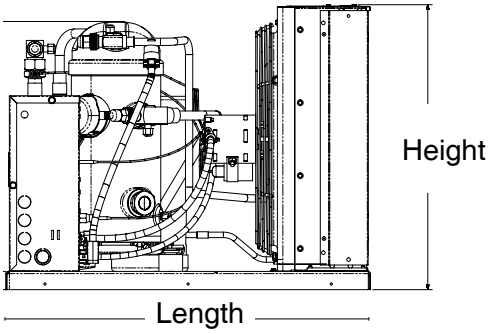

LBP Application Range 20°F to 55°F (-6.7°C to 12.8C)				
Model Number	**Item Number (BOM)**	**Length in (mm)**	**Width in (mm)**	**Height in (mm)**
R404A/R507 LBP				
AWA2448ZXDXC	2B1118-9	24.0 (610)	17.8 (452)	15.4 (391)
AWA2448ZXTXC	2B1121-9	24.0 (610)	17.8 (452)	15.4 (391)
AWA2457ZXDXC	2B3243-9	24.0 (610)	17.8 (452)	16.4 (417)
AWA2457ZXTXC	2B3244-9	24.0 (610)	17.8 (452)	16.4 (417)
AWA2464ZXDXC	2B3224-9	24.0 (610)	17.8 (452)	15.4 (391)
AWA2464ZXTXC	2B3225-9	24.0 (610)	17.8 (452)	16.4 (417)
AWA2479ZXDXC	2C2114-9	24.0 (610)	19.4 (493)	16.2 (411)
AWA2479ZXTXC	2C2115-9	24.0 (610)	19.4 (493)	16.2 (411)
AWA2490ZXDXC	2C2111-9	25.0 (635)	33.6 (853)	19.5 (495)
AWA2490ZXTXC	2C2112-9	25.0 (635)	33.6 (853)	19.5 (495)
AVA2510ZXNXC	2C2116-9	24.0 (610)	19.4 (493)	16.2 (411)
AVA2510ZXTXC	2C2117-9	24.0 (610)	19.4 (493)	16.2 (411)
AVA2512ZXNXM	2B3140-9	25.0 (635)	33.6 (853)	19.5 (495)
AVA2512ZXTXM	2B3141-9	25.0 (635)	33.5 (851)	19.5 (495)
AVA2515ZXNXC	2B3144-9	25.0 (635)	33.6 (853)	19.5 (495)
AVA2515ZXTXC	2B3145-9	25.0 (635)	33.6 (853)	19.5 (495)
AWG4524EXNXM	2C2103-9	33.5 (851)	25.0 (635)	19.5 (495)
AWG4524EXTXM	2C2108-9	33.5 (851)	25.0 (635)	19.5 (495)
AWG4530EXGXM	2C2110-1	33.4 (850)	25.0 (635)	19.5 (495)
AWG4530EXNXM	2C2106-9	33.5 (851)	25.0 (635)	19.5 (495)
AWG4530EXTXM	2C2107-9	33.5 (851)	25.0 (635)	19.5 (495)
AVA4540EXNXM	2B3127-9	25.0 (635)	33.6 (853)	19.5 (495)
AVA4540EXTXM	2B3128-9	25.0 (635)	33.6 (853)	19.5 (495)

SPECIFICATIONS

Applications

Evaporating Ranges:	High Temperature:	-10°F to +50°F (-12.2°C to +12.8°C)
	Med./Comm. Temperature:	-5°F to +40°F (-20.6°C to +4.4°C)
	Low (Vapor Injection) Temp:	-40°F to +5°F (-40°C to -15.0°C)
	Performance at +105°F (+40.6°C) Condensing Temperature	

Materials

Valves:	Steel, Copper Sweat Connections	
Receiver:	Steel, Rotolock Valve Connection	
Base Plate:	Hot Rolled Steel, 14-16 Ga.	
Refrigerant/Oil:	R134a, R404A/R507 Polyolester (POE)	R22, R12 Synthetic Alkylate (AB)
Condenser:	Coaxial Coil with Steel Outer Tube and Copper Inner Tube	
Water Regulating Valve:	Factory installed, Opening setting based on 105°F (+40.6°C) Condensing Temperature	

Physical Properties

Dimensions:	Vary by model - see pages 66
Connection Type:	Vary by model - see pages 63 and 65

WATER COOLED CONDENSING UNIT MODEL NOMENCLATURE

AWA 2 490 Z XD XW

Family & Generation
AE, AH, AJ, AK, AW, AV Compressor Series

Application Range

4	High	+10°F to +55°F (-12.2°C to +12.8°C)
7, 9	Medium/Comm.	-5°F to +40°F (-20.6°C to +4.4°C)
2	Low	-40°F to +5°F (-40.0°C to -15.0°C)

Capacity
First number is total digits, the remainder is capacity in Btu/h.
This example 9000 Btu/h capacity.

Refrigerant
A = R12 C = R407C E = R22 Z = R404A/R507

Release Variant

Voltage/Frequency/Phase

XA	115/60/1; 100/50/1
XD	208-230/60/1; 200/50/1
XF	208-230/60/3; 200-240/50/3
XG	460/60/3; 380-420/50/3
XN	208-230/60/1; 200-220/50/1
XT	200-230/60/3; 200-220/50/3

TECUMSEH WATER COOLED

WATER COOLED CONDENSING UNITS

Commercial Temperature

Model Number	Line Connections^ in (mm)		HP	Flow Rate (GPM) at Rating Point	Performance at 105°F (40.6°C) Condensing Temperature Capacity (Btu/h) at Suction Temperature				
	Suction	Liquid			0°F	10°F	20°F	30°F	40°F
					-17.8°C	-12.2°C	-6.7°C	-1.1°C	4.4°C
R404A/R507 CBP Application Range 0°F to 40°F (-17.8°C to 4.4°C)									
AKA9442ZXAXW	1/2 SAE (12.7 SAE)	1/4 SAE (6.4 SAE)	1/2	0.5	2,400	3,600	5,000	6,600	8,400
AKA9442ZXDXW	1/2 SAE (12.7 SAE)	1/4 SAE (6.4 SAE)	1/2	0.5	2,400	3,600	5,000	6,600	8,400
AKA9467ZXAXW	1/2 SAE (12.7 SAE)	1/4 SAE (6.4 SAE)	3/4	0.8	3,670	5,090	6,840	8,520	-
AKA9467ZXDXW	1/2 SAE (12.7 SAE)	1/4 SAE (6.4 SAE)	3/4	0.8	3,670	5,090	6,840	8,520	-
AKA9476ZXDXW	1/2 SAE (12.7 SAE)	1/4 SAE (6.4 SAE)	1	0.9	4,470	6,100	7,870	9,980	-
R22† CBP Application Range 0°F to 40°F (-17.8°C to 4.4°C)									
AEA9423EXAXW	3/8 SAE (9.5 SAE)	1/4 SAE (6.4 SAE)	1/3	0.4	1,420	2,000	2,580	3,350	4,180
AKA9457EXAXW	1/2 SAE (12.7 SAE)	1/4 SAE (6.4 SAE)	3/4	0.8	2,120	3,770	5,500	7,170	9,150
AKA9457EXDXW	1/2 SAE (12.7 SAE)	1/4 SAE (6.4 SAE)	3/4	0.8	2,120	3,770	5,500	7,170	9,150
AKA9479EXDXW	1/2 SAE (12.7 SAE)	1/4 SAE (6.4 SAE)	1	1.1	3,410	5,640	7,810	10,110	12,750
AJA9511EXDXW	1/2 SAE (12.7 SAE)	1/4 SAE (6.4 SAE)	1-1/4	1.8	4,570	7,730	10,710	13,720	17,110
AWG9513EXNXW	7/8 (22.2)	3/8 SAE (9.5 SAE)	1-1/2	2.6	6,750	9,610	13,000	17,000	21,740
AWG9513EXTXW	7/8 (22.2)	3/8 (9.5)	1-1/2	2.6	6,750	9,610	13,000	17,000	21,740

High Temperature

Model Number	Line Connections^ in (mm)		HP	Flow Rate (GPM) at Rating Point	Performance at 105°F (40.6°C) Condensing Temperature Capacity (Btu/h) at Suction Temperature				
	Suction	Liquid			20°F	30°F	40°F	45°F	50°F
					-6.7°C	-1.1°C	4.4°C	7.2°C	10.0°C
R134a HBP Application Range 20°F to 50°F (-6.7°C to 10.0°C)									
AEA4440YXAXW	3/8 SAE (9.5 SAE)	1/4 SAE (6.4 SAE)	1/3	0.5	2,500	3,200	4,100	4,600	5,200
AKA4475YXAXW	1/2 SAE (12.7 SAE)	1/4 SAE (6.4 SAE)	1/2	0.8	3,800	5,050	6,600	7,500	8,400
AKA4475YXDXW	1/2 SAE (12.7 SAE)	1/4 SAE (6.4 SAE)	1/2	0.8	3,800	5,050	6,600	7,500	8,400
AKA4490YXDXW	1/2 SAE (12.7 SAE)	3/8 SAE (9.5 SAE)	3/4	1.2	4,700	6,100	8,000	9,000	10,000
AJA4510YXDXW	1/2 SAE (12.7 SAE)	3/8 SAE (9.5 SAE)	1	1.3	5,400	7,000	9,000	10,200	11,400
AJA4514YXDXW	1/2 SAE (12.7 SAE)	3/8 SAE (9.5 SAE)	1-1/4	2.0	7,500	9,500	12,500	14,000	15,500
R22† HBP Application Range 20°F to 50°F (-6.7°C to 10.0°C)									
AWG4520EXNXW	5/8 (15.9)	3/8 (9.5)	2-1/2	3.3	14,670	19,230	24,800	27,590	-
AWG4524EXNXW	1/2 (12.7)	3/8 (9.5)	2-1/2	3.3	14,670	19,230	24,800	27,590	-
AWG4524EXTXW	1/2 (12.7)	3/8 (9.5)	2-1/2	3.3	14,670	19,230	24,800	27,590	-
AWG4530EXNXW	1/2 (12.7)	3/8 (9.5)	3	4.2	18,410	23,810	30,260	33,480	-
AWG4530EXTXW	1/2 (12.7)	3/8 (9.5)	3	4.2	18,410	23,810	30,260	33,480	-
AVA4535EXNXW	7/8 (22.2)	3/8 (9.5)	3	4.5	19,930	26,730	30,940	35,160	39,370
AVA4535EXTXW	1/2 (12.7)	3/8 (9.5)	3	4.2	19,930	26,730	30,940	35,160	-
AWG4532EXNXW	5/8 (15.9)	1/2 (12.7)	3	7.2	20,330	26,030	32,560	36,170	40,030
AWG4532EXTXW	5/8 (15.9)	1/2 (12.7)	3	7.2	20,330	26,030	32,560	36,170	40,030
AVB4538EXNXW	7/8 (22.2)	5/8 (15.9)	4	9.1	24,310	31,770	40,490	45,390	50,690
AVB4538EXTXW	7/8 (22.2)	5/8 (15.9)	4	9.1	24,310	31,770	40,490	45,390	50,690
AVB4549EXNXW	7/8 (22.2)	5/8 (15.9)	5	11.7	31,170	40,810	52,510	58,330	65,040
AVB4549EXTXW	7/8 (22.2)	5/8 (15.9)	5	11.7	31,170	40,810	52,510	58,330	65,040
AVB4558EXNXW	7/8 (22.2)	5/8 (15.9)	5	13.5	37,160	45,930	56,030	61,850	68,160
AVB4558EXTXW	7/8 (22.2)	5/8 (15.9)	5	13.5	37,160	45,930	56,030	61,850	68,160

Medium/High Temperature

Model Number	Line Connections^ in (mm)		HP	Flow Rate (GPM) at Rating Point	Performance at 105°F (40.6°C) Condensing Temperature Capacity (Btu/h) at Suction Temperature				
	Suction	Liquid			20°F	30°F	40°F	45°F	50°F
					-6.7°C	-1.1°C	4.4°C	7.2°C	10.0°C
R404A/R507 MBP/HBP Application Range 20°F to 50°F (-6.7°C to 10.0°C)									
AJA7512ZXDXW	1/2 SAE (12.7 SAE)	3/8 SAE (9.5 SAE)	1-1/2	1.8	5,000	7,000	9,000	12,000	14,000
AWA7515ZXDXW	7/8 (22.2)	3/8 SAE (9.5 SAE)	1-3/4	2.1	5,740	8,160	11,190	14,820	19,020
AWA7515ZXTXW	7/8 (22.2)	3/8 SAE (9.5 SAE)	1-3/4	2.1	5,740	8,160	11,190	14,820	19,020

^ Connections are ODF, unless otherwise stated. † Or compatible equivalent.
** Please check Bill of Material (BOM) to confirm configurations and options that may differ from the uniform model numbers above.*

TECUMSEH WATER COOLED

WATER COOLED CONDENSING UNITS

Low Temperature

Model Number	Line Connections^ in (mm)		HP	Flow Rate (GPM) at Rating Point	Performance at 105°F (40.6°C) Condensing Temperature Capacity (Btu/h) at Suction Temperature				
	Suction	Liquid			-30°F	-20°F	-10°F	0°F	10°F
					-34.4°C	-28.9°C	-23.3°C	-17.8°C	-12.2°C
R404A/R507 LBP Application Range -30°F to 10°F (-34.4°C to -12.2°C)									
AJA2424ZXDXW	1/2 SAE (12.7 SAE)	3/8 SAE (9.5 SAE)	1/2	0.5	1,100	1,700	2,400	3,100	4,000
AJA2433ZXDXW	1/2 SAE (12.7 SAE)	3/8 SAE (9.5 SAE)	1/2	0.7	1,100	1,700	2,400	3,100	4,000
AWA2453ZXDXW	5/8 (15.9)	3/8 SAE (9.5 SAE)	1-1/4	1.4	2,110	3,500	5,280	7,420	9,850
AWA2488ZXDXW	7/8 (22.2)	3/8 SAE (9.5 SAE)	2	2.2	3,800	6,020	8,760	12,050	15,910
AVA2512ZXNXW	7/8 (22.2)	3/8 SAE (9.5 SAE)	3	3.1	5,980	8,900	12,540	17,080	22,650
AVA2512ZXTXW	7/8 (22.2)	3/8 SAE (9.5 SAE)	3	3.1	5,980	8,900	12,540	17,080	22,650

^ Connections are ODF, unless otherwise stated. † Or compatible equivalent.
** Please check Bill of Material (BOM) to confirm configurations and options that may differ from the uniform model numbers above.*

WATER COOLED CONDENSING UNITS DIMENSIONS

CBP Application Range -10°F to 40°F (-23.3°C to 4.4°C)					
Model number	Item Number (BOM)	Length in (mm)	Width in (mm)	Height in (mm)	Compressor Height in (mm)
R404A/R507 CBP Application Range -10°F to 40°F (-23.3°C to 4.4°C)					
AKA9442ZXAXW	2D288-1	21.4 (544)	14.0 (356)	10.5 (267)	10.1 (257)
AKA9442ZXDXW	2D289-9	21.4 (544)	14.0 (356)	10.5 (267)	10.5 (267)
AKA9467ZXAXW	2B774-1	21.4 (544)	14.0 (356)	10.5 (267)	10.1 (257)
AKA9467ZXDXW	32B775-1	21.4 (544)	14.0 (356)	10.5 (267)	10.1 (257)
AKA9476ZXDXW	2B1103-1	21.4 (544)	14.0 (356)	10.5 (267)	10.1 (257)
R22 CBP Application Range -10°F to 40°F (-23.3°C to 4.4°C)					
AEA9423EXAXW	32C363-1	18.5 (470)	13.0 (330)	10 (254)	8.8 (224)
AKA9457EXAXW	32C290-1	21.4 (544)	14.0 (356)	10.5 (267)	10.1 (257)
AKA9457EXDXW	32C291-1	21.4 (544)	14.0 (356)	10.5 (267)	10.1 (257)
AKA9479EXDXW	32B746-1	21.4 (544)	14.0 (356)	10.5 (267)	10.5 (267)
AJA9511EXDXW	32A1192-1	24.0 (610)	17.0 (432)	13.6 (345)	12.0 (305)
AWG9513EXNXW	2B3227-9	24.3 (617)	17.9 (455)	15.2 (386)	14.3 (363)
AWG9513EXTXW	2B3228-9	24.3 (617)	17.9 (455)	15.2 (386)	14.3 (363)

HBP Application Range 20°F to 55°F (-6.7°C to 12.8°C)					
Model number	Item Number (BOM)	Length in (mm)	Width in (mm)	Height in (mm)	Compressor Height in (mm)
R134a HBP Application Range 20°F to 55°F (-6.7°C to 12.8°C)					
AEA4440YXAXW	32C391-1	18.4 (467)	13.0 (330)	10.5 (267)	8.8 (224)
AKA4475YXAXW	2D294-1	21.4 (544)	14.0 (356)	10.5 (267)	10.1 (257)
AKA4475YXDXW	2D295-1	21.4 (544)	14.0 (356)	10.5 (267)	10.1 (257)
AKA4490YXDXW	2B779-1	21.4 (544)	14.0 (356)	11.7 (297)	10.1 (257)
AJA4510YXDXW	32B780-1	24.0 (610)	17.0 (432)	10.9 (277)	12.0 (305)
AJA4514YXDXW	32B1104-1	24.0 (610)	17.0 (432)	10.9 (277)	12.0 (305)

TECUMSEH WATER COOLED

WATER COOLED CONDENSING UNITS DIMENSIONS

Model number	Item Number (BOM)	Length in (mm)	Width in (mm)	Height in (mm)	Compressor Height in (mm)
HBP Application Range 20°F to 55°F (-6.7°C to 12.8°C)					
R22 HBP Application Range 20°F to 55°F (-6.7°C to 12.8°C)					
AWG4520EXNXW	32W1501-1	24.0 (610)	17.0 (432)	15.0 (381)	12.7 (323)
AWG4524EXNXW	32W2101-1	24.0 (610)	17.0 (432)	15.0 (381)	12.7 (323)
AWG4524EXTXW	32W2102-1	24.0 (610)	17.0 (432)	15.0 (381)	12.7 (323)
AWG4530EXNXW	32W2503-1	24.0 (610)	17.0 (432)	15.0 (381)	12.7 (323)
AWG4530EXTXW	32W2504-1	24.0 (610)	17.0 (432)	15.0 (381)	12.7 (323)
AVA4535EXNXW	32W3105-1	27.4 (696)	23.6 (599)	15.5 (394)	15.4 (391)
AVA4535EXTXW	32W3106-1	24.0 (610)	17.0 (432)	15.0 (381)	14.0 (356)
AWG4532EXNXW	32W3151-1	26.0 (660)	23.6 (599)	15.4 (391)	14.3 (363)
AWG4532EXTXW	32W3152-1	26.0 (660)	23.6 (599)	15.4 (391)	14.3 (363)
AVB4538EXNXW	32W4079-1	27.4 (696)	23.6 (599)	22.3 (566)	15.4 (391)
AVB4538EXTXW	32W4080-1	27.4 (696)	23.6 (599)	22.3 (566)	15.4 (391)
AVB4549EXNXW	32W4791-1	27.4 (696)	23.6 (599)	22.3 (566)	15.4 (391)
AVB4549EXTXW	32W4792-1	27.4 (696)	23.6 (599)	22.3 (566)	15.4 (391)
AVB4558EXNXW	32W5093-1	27.4 (696)	23.6 (599)	22.3 (566)	15.4 (391)
AVB4558EXTXW	32W5094-1	27.4 (696)	23.6 (599)	22.3 (566)	15.4 (391)
MBP/HBP Application Range -10°F to 40°F (-23.3°C to 4.4°C)					
R404A/R507 MBP Application Range -10°F to 40°F (-23.3°C to 4.4°C)					
AJA7512ZXDXW	32B3210-1	24.0(610)	17.0 (432)	10.9 (277)	12.0 (305)
AWA7515ZXDXW	2B3221-9	24.3 (617)	17.0 (432)	15.5 (394)	14.3 (363)
AWA7515ZXTXW	2B3222-9	24.3 (617)	17.0 (432)	15.5 (394)	14.3 (363)
R404A/R507 LBP Application Range -40°F to 10°F (-40°C to -12.2°C)					
AJA2424ZXDXW	32D286-1	24.9 (632)	19.8 (503)	15.4 (391)	12.5 (318)
AJA2433ZXDXW	32B781-1	24.9 (632)	19.8 (503)	15.4 (391)	12.5 (318)
AWA2453ZXDXW	2B1119-9	24.3 (617)	17.0 (432)	15.7 (399)	14.3 (363)
AWA2488ZXDXW	2C2113-9	24.3 (617)	17.0 (432)	15.7 (399)	14.3 (363)
AVA2512ZXNXW	2B3143-9	24.3 (617)	17.0 (432)	16.6 (422)	14.6 (371)
AVA2512ZXTXW	2B3142-9	24.3 (617)	17.0 (432)	16.6 (422)	14.6 (371)

Packless Tecumseh Coils

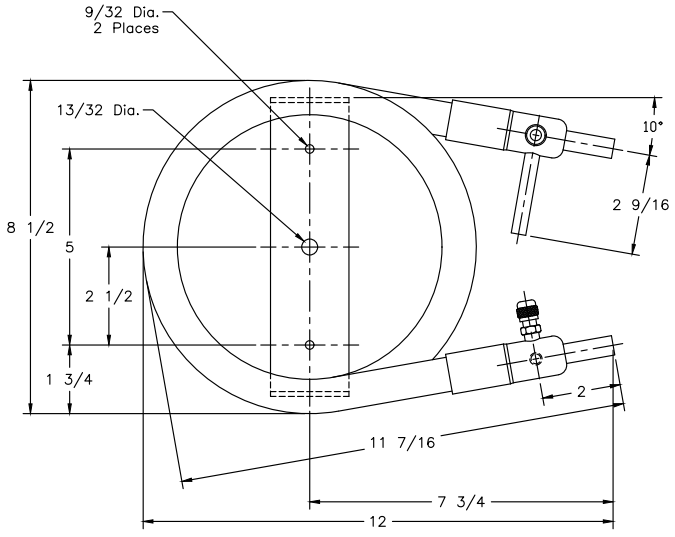

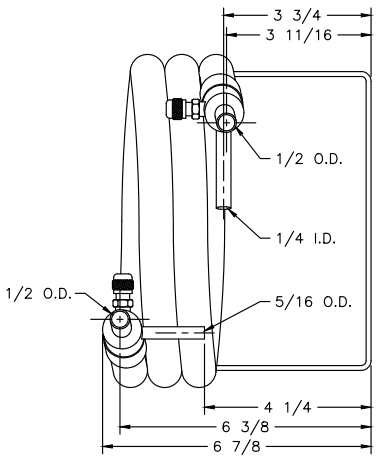

Part #	Tecumseh model	LIST
COAX-1067-H	50812	

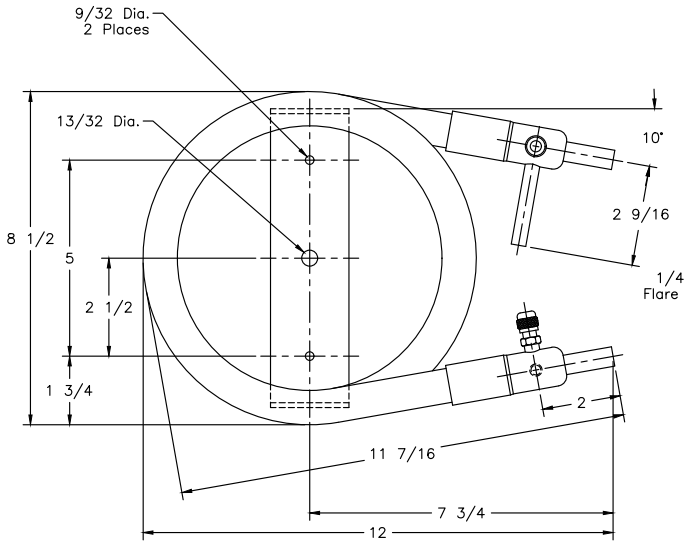

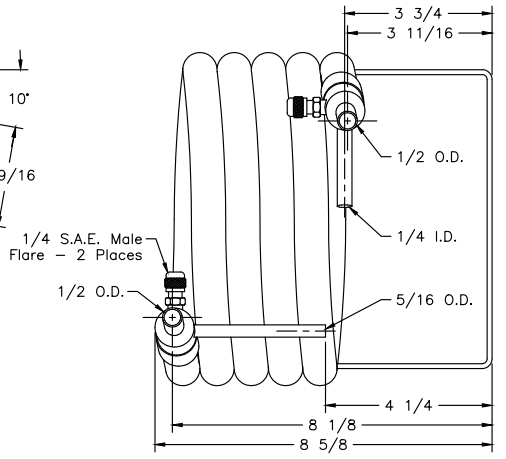

Part #	Tecumseh model	LIST
COAX-1068-H	50827	

GRAVITY COIL

Ceiling Mounted Gravity Coil

- Simplified and easy installation
- Energy saver no motor
- Low cost maintenance
- Close temperature control
- Provide low air velocity and high humidity condition
- White baked enamel exterior
- Collard aluminum fins
- Copper tubes mechanically expanded for maximum heat transfer
- Drain pan c/w 1/2" copper tube

INSTALLATION:
- Complete unit with support hangers
- "P-Trap" included
- Dry loop prefixed
- Gas distributor on request
- Clock timer recommended with installation



Part #	A	B	C	D	E
GF20-30	25-3/4"	35"	8-1/4"	30"	10"
GF20-34	25-3/4"	39"	8-1/4"	34"	10"
GF20-38	25-3/4"	43"	8-1/4"	38"	10"
GF20-42	25-3/4"	47"	8-1/4"	42"	10"
GF20-45	25-3/4"	50"	8-1/4"	45"	10"
GF20-50	25-3/4"	55"	8-1/4"	50"	10"
GF20-54	25-3/4"	59"	8-1/4"	54"	10"
GF20-56	25-3/4"	61"	8-1/4"	56"	10"
GF20-60	25-3/4"	65"	8-1/4"	60"	10"
GF20-72	25-3/4"	77"	8-1/4"	72"	10"
GF20-78	25-3/4"	83"	8-1/4"	78"	10"
GF20-88	25-3/4"	93"	8-1/4"	88"	10"

Replacement Coils for Foster Reach-In Cooler & Freezer Packages

Model #	Application	L (in)	W (in)	H (in)	LIST
MA-4-4-16-FAB	Cooler	18	3	4	$263.80
MA-5-4-16-FAB	Cooler	18	3-7/8	4	$313.00
MA-7-4-16-FAB	Freezer	18	5-1/4	4	$419.00

NOTE: All coils come with mounting bracket. Freezer coil has two passes to insert heaters. Fin spacing is 1/8".

GRAVITY COIL

REF PLUS Gravity Coil EGA

- Patented gravity flow technology
- Extra-low air velocity
- Air defrost
- Choice of 3, 4 or 6 face tubes
- Choice of 2, 3, 4, 6 or 8 slabs
- Full stainless steel available
- Ready for low GWP refrigerant and CO2 applications
- Ceiling mountable

Capacity range: 630 to 20,000 BTU/HR/15°F TD
Temperature range: Above +36OF
Casing: Heavy-gauge textured aluminum
Slabs: 2,3,4,6 or 8
Face tubes: 3, 4 or 6
Fins: 3 FPI
No fans. Air flow through chimney effect

Applications

EGA series are for coolers +36°F and above. The temperature difference should always be between 15°FTD and 20°FTD for proper operation. Extra low air velocity guarantees draft-free conditions with minimum product weight loss.

Specifications

Patented gravity flow EGA series are ceiling mounted. Units use multiple sloped coil slabs for an optimized air distribution.

Coils

Coils are manufactured with seamless deoxidized heavy wall smooth copper tubes and aluminum plate fins. For a maximum heat transfer, the tubes are mechanically expanded into self spaced plate fins with full collar for a permanent bond. Connections and return bends are brazed with high temperature brazing alloy. Coils are factory leak tested at 300 psig and purged with a -40°F dew point dry air. Coils are circuited for HCFC and HFC refrigerant and they are provided with sweat type connections. *(Different coating materials are available)*

Casing

The casing material for standard EGA series is heavy gauge textured aluminum. All units come with stainless steel or plated hardware for a lightweight assembly. *(Other materials are available)*

Drain Pen

EGA series are provided with removable 3/4” female pipe thread drain fitting for easier installation and cleaning when installed with a drain union. All gravity coil are assembled with corrosion free material and components. *Specifications are subject to change without notice.*

CAPACITY TABLE

REF PLUS Gravity Coil EGA

EGA: For Coolers above +36°F

2 Slabs

Model	CAPACITY (MBH)	CONNECTION (INCHES)		R-448A OPERATING CHARGE (LB.)	SHIPPING WEIGHT (LBS)
	15°FTD	LIQUID	SUCTION		
EGA323F-32	0.63	1/2"	1/2"	1.08	78
EGA323F-42	0.86	1/2"	1/2"	1.37	71
EGA323F-52	1.08	1/2"	1/2"	1.66	85
EGA323F-62	1.32	1/2"	1/2"	1.95	99
EGA323F-72	1.53	1/2"	1/2"	2.24	113
EGA323F-80	1.73	1/2"	1/2"	2.47	124
EGA323F-90	1.97	1/2"	1/2"	2.76	136
EGA323F-112	2.45	1/2"	1/2"	3.4	168

3 Slabs

Model	CAPACITY (MBH)	CONNECTION (INCHES)		R-448A OPERATING CHARGE (LB.)	SHIPPING WEIGHT (LBS)
	15°FTD	LIQUID	SUCTION		
EGA333F-32	0.99	1/2"	1/2"	1.61	67
EGA333F-42	1.34	1/2"	1/2"	2.05	83
EGA333F-52	1.68	1/2"	1/2"	2.49	99
EGA333F-62	2.01	1/2"	1/2"	2.93	114
EGA333F-72	2.37	1/2"	1/2"	3.36	130
EGA333F-80	2.63	1/2"	1/2"	3.71	143
EGA333F-90	2.97	1/2"	1/2"	4.15	158
EGA333F-112	3.75	1/2"	1/2"	5.11	193

4 Slabs

Model	CAPACITY (MBH)	CONNECTION (INCHES)		R-448A OPERATING CHARGE (LB.)	SHIPPING WEIGHT (LBS)
	15°FTD	LIQUID	SUCTION		
EGA343F-32	1.35	1/2"	1/2"	2.15	78
EGA343F-42	1.80	1/2"	1/2"	2.74	96
EGA343F-52	2.27	1/2"	1/2"	3.32	113
EGA343F-62	2.73	1/2"	1/2"	3.9	130
EGA343F-72	3.18	1/2"	1/2"	4.48	149
EGA343F-80	3.54	1/2"	1/2"	4.94	162
EGA343F-90	4.07	1/2"	1/2"	5.53	180
EGA343F-112	5.01	1/2"	1/2"	6.81	218

6 Slabs

Model	CAPACITY (MBH)	CONNECTION (INCHES)		R-448A OPERATING CHARGE (LB.)	SHIPPING WEIGHT (LBS)
	15°FTD	LIQUID	SUCTION		
EGA363F-32	2.09	1/2"	1/2"	3.23	99
EGA363F-42	2.78	1/2"	1/2"	4.1	119
EGA363F-52	3.47	1/2"	1/2"	4.97	141
EGA363F-62	4.16	1/2"	1/2"	5.85	163
EGA363F-72	4.85	1/2"	1/2"	6.72	184
EGA363F-80	5.37	1/2"	1/2"	7.42	201
EGA363F-90	6.06	1/2"	1/2"	8.29	223
EGA363F-112	7.46	1/2"	5/8"	10.21	270

NOTES:

- Standard unit are 3 FPI
- Capacities are based on 25°F SST and R-448A
- Capacities are based on 85% R.H. & 100°F liquid temperature

DIMENSIONAL DRAWING

3 Face Tube Models

EGA

2 Slabs

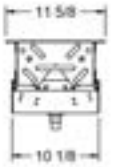

3 Slabs

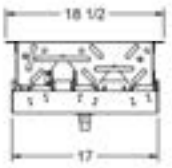

4 Slabs

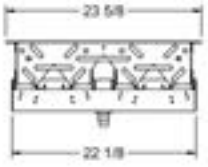

6 Slabs

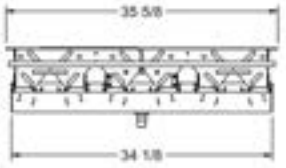

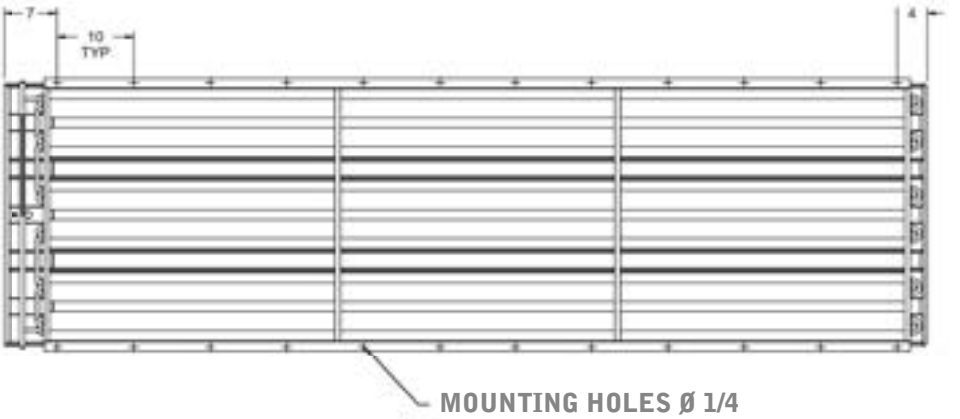

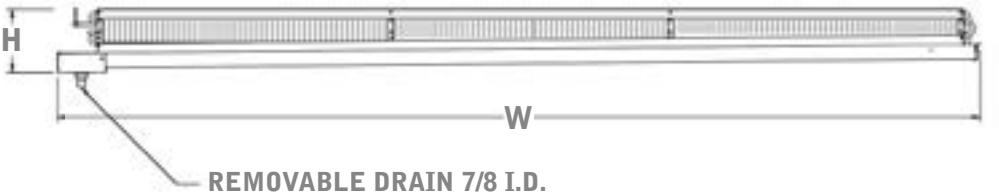

Model	DIMENSIONS (INCHES)	
	H	W
EGA3*3F-32	8	41
EGA3*3F-42	8	51
EGA3*3F-52	8	61
EGA3*3F-62	8 - 7/16	71
EGA3*3F-72	8 - 7/16	81
EGA3*3F-80	8 - 7/16	89
EGA3*3F-90	8 - 7/16	99
EGA3*3F-112	8 - 7/16	121

* Slab quantity

CAPACITY TABLE

4 Face Tube Models

EGA: For Coolers above +35°F

2 Slabs

Model	CAPACITY (MBH)	CONNECTION (INCHES)		R-448A OPERATING CHARGE (LB.)	SHIPPING WEIGHT (LBS)
	15°FTD	LIQUID	SUCTION		
EGA423F-32	0.87	1/2"	1/2"	1.44	64
EGA423F-42	1.17	1/2"	1/2"	1.82	80
EGA423F-52	1.47	1/2"	1/2"	2.21	94
EGA423F-62	1.77	1/2"	1/2"	2.6	110
EGA423F-72	2.09	1/2"	1/2"	2.99	124
EGA423F-80	2.34	1/2"	1/2"	3.3	136
EGA423F-90	2.63	1/2"	1/2"	3.69	152
EGA423F-112	3.30	1/2"	1/2"	4.54	185

3 Slabs

Model	CAPACITY (MBH)	CONNECTION (INCHES)		R-448A OPERATING CHARGE (LB.)	SHIPPING WEIGHT (LBS)
	15°FTD	LIQUID	SUCTION		
EGA433F-32	1.35	1/2"	1/2"	2.15	78
EGA433F-42	1.80	1/2"	1/2"	2.15	96
EGA433F-52	2.27	1/2"	1/2"	3.32	113
EGA433F-62	2.73	1/2"	1/2"	3.9	130
EGA433F-72	3.18	1/2"	1/2"	4.48	149
EGA433F-80	3.54	1/2"	1/2"	4.95	162
EGA433F-90	3.99	1/2"	1/2"	5.53	180
EGA433F-112	5.01	1/2"	1/2"	6.81	218

4 Slabs

Model	CAPACITY (MBH)	CONNECTION (INCHES)		R-448A OPERATING CHARGE (LB.)	SHIPPING WEIGHT (LBS)
	15°FTD	LIQUID	SUCTION		
EGA443F-32	1.83	1/2"	1/2"	2.87	91
EGA443F-42	2.45	1/2"	1/2"	3.65	111
EGA443F-52	3.08	1/2"	1/2"	4.42	132
EGA443F-62	3.66	1/2"	1/2"	5.2	152
EGA443F-72	4.28	1/2"	1/2"	5.97	173
EGA443F-80	4.76	1/2"	1/2"	6.6	188
EGA443F-90	5.37	1/2"	1/2"	7.37	209
EGA443F-112	6.62	1/2"	5/8"	9.08	253

6 Slabs

Model	CAPACITY (MBH)	CONNECTION (INCHES)		R-448A OPERATING CHARGE (LB.)	SHIPPING WEIGHT (LBS)
	15°FTD	LIQUID	SUCTION		
EGA463F-32	2.82	1/2"	1/2"	4.31	118
EGA463F-42	3.75	1/2"	1/2"	5.47	144
EGA463F-52	4.65	1/2"	1/2"	6.64	169
EGA463F-62	5.58	1/2"	1/2"	7.8	194
EGA463F-72	6.36	1/2"	5/8"	8.96	220
EGA463F-80	7.10	1/2"	5/8"	9.89	240
EGA463F-90	8.03	1/2"	5/8"	11.06	265
EGA463F-112	10.02	1/2"	5/8"	13.61	322

NOTES:

- Standard unit are 3 FPI
- Capacities are based on 25°F SST and R-448A
- Capacities are based on 85% R.H. & 100°F liquid temperature

DIMENSIONAL DRAWING

4 Face Tube Models

EGA

2 Slabs

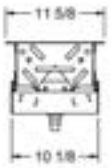

3 Slabs

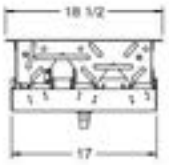

4 Slabs

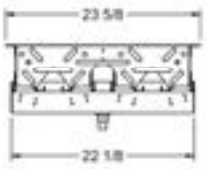

6 Slabs

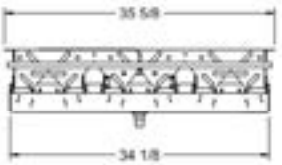

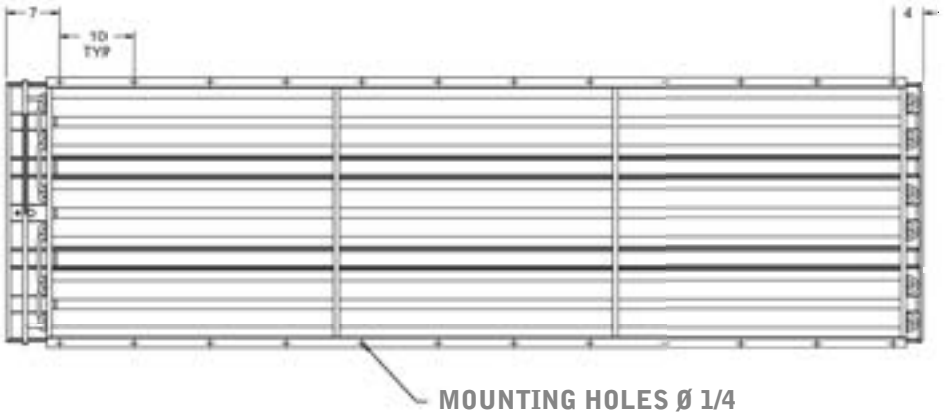

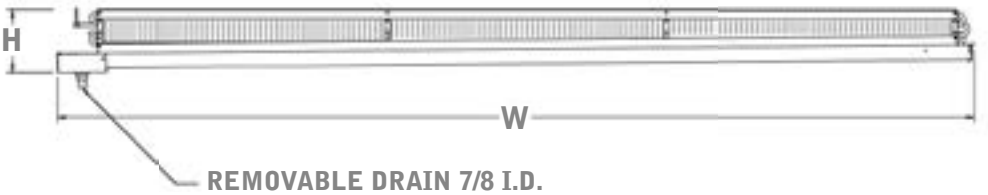

Model	DIMENSIONS (INCHES)	
	H	W
EGA4*3F-32	9 - 3/8	41
EGA4*3F-42	9 - 3/8	51
EGA4*3F-52	9 - 3/8	61
EGA4*3F-62	9 - 3/4	71
EGA4*3F-72	9 - 3/4	81
EGA4*3F-80	9 - 3/4	89
EGA4*3F-90	9 - 3/4	99
EGA4*3F-112	9 - 3/4	121

* Slab quantity

CAPACITY TABLE

6 Face Tube Models

EGA: For Coolers above +36°F

2 Slabs

Model	CAPACITY (MBH)	CONNECTION (INCHES)		R-448A OPERATING CHARGE (LB.)	SHIPPING WEIGHT (LBS)
	15°FTD	LIQUID	SUCTION		
EGA623F-32	1.35	1/2"	1/2"	2.15	78
EGA623F-42	1.80	1/2"	1/2"	2.73	96
EGA623F-52	2.27	1/2"	1/2"	3.32	113
EGA623F-62	2.73	1/2"	1/2"	3.9	130
EGA623F-72	3.18	1/2"	1/2"	4.48	149
EGA623F-80	3.54	1/2"	1/2"	4.95	162
EGA623F-90	3.99	1/2"	1/2"	5.53	180
EGA623F-112	5.01	1/2"	1/2"	6.81	218

4 Slabs

Model	CAPACITY (MBH)	CONNECTION (INCHES)		R-448A OPERATING CHARGE (LB.)	SHIPPING WEIGHT (LBS)
	15°FTD	LIQUID	SUCTION		
EGA643F-32	2.82	1/2"	1/2"	4.3	118
EGA643F-42	3.75	1/2"	1/2"	5.47	144
EGA643F-52	4.65	1/2"	1/2"	6.63	169
EGA643F-62	5.58	1/2"	1/2"	7.8	194
EGA643F-72	6.36	1/2"	5/8"	8.96	220
EGA643F-80	7.10	1/2"	5/8"	9.89	240
EGA643F-90	8.03	1/2"	5/8"	11.06	265
EGA643F-112	10.02	1/2"	5/8"	13.62	322

6 Slabs

Model	CAPACITY (MBH)	CONNECTION (INCHES)		R-448A OPERATING CHARGE (LB.)	SHIPPING WEIGHT (LBS)
	15°FTD	LIQUID	SUCTION		
EGA663F-32	4.28	1/2"	1/2"	6.46	158
EGA663F-42	5.66	1/2"	1/2"	8.2	191
EGA663F-52	6.92	1/2"	5/8"	9.95	226
EGA663F-62	8.28	1/2"	5/8"	11.69	259
EGA663F-72	9.66	1/2"	5/8"	13.44	292
EGA663F-80	10.76	1/2"	5/8"	14.84	318
EGA663F-90	12.14	1/2"	5/8"	16.58	351
EGA663F-112	15.03	1/2"	5/8"	20.42	423

8 Slabs

Model	CAPACITY (MBH)	CONNECTION (INCHES)		R-448A OPERATING CHARGE (LB.)	SHIPPING WEIGHT (LBS)
	15°FTD	LIQUID	SUCTION		
EGA683F-32	5.63	1/2"	5/8"	8.61	199
EGA683F-42	7.46	1/2"	5/8"	10.94	240
EGA683F-52	9.29	1/2"	5/8"	13.26	281
EGA683F-62	11.12	1/2"	5/8"	15.59	322
EGA683F-72	12.72	1/2"	5/8"	17.92	362
EGA683F-80	14.19	1/2"	5/8"	19.78	395
EGA683F-90	16.02	1/2"	5/8"	22.11	436
EGA683F-112	20.04	1/2"	5/8"	27.23	527

NOTES:

- Standard unit are 3 FPI
- Capacities are based on 25°F SST and R-448A
- Capacities are based on 85% R.H. & 100°F liquid temperature

DIMENSIONAL DRAWING

6 Face Tube Models

EGA

2 Slabs



4 Slabs

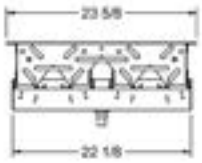

6 Slabs

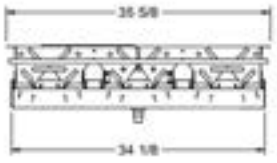

8 Slabs

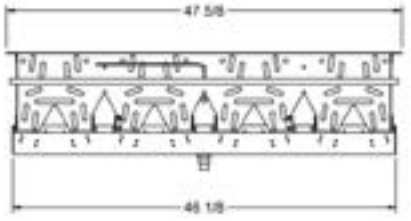

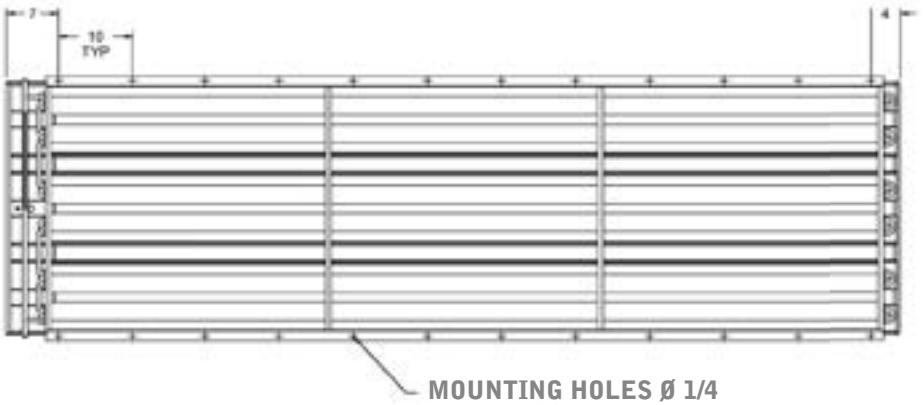

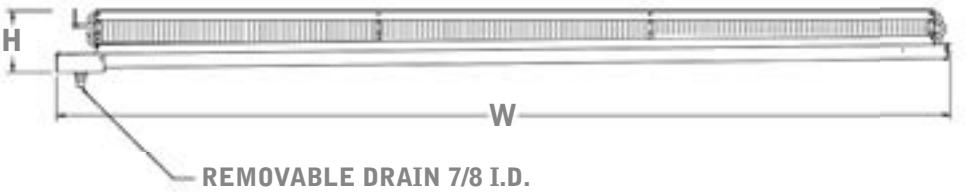

Model	DIMENSIONS (INCHES)	
	H	W
EGA6*3F-32	12 -1/4	41
EGA6*3F-42	12 -1/4	51
EGA6*3F-52	12 -1/4	61
EGA6*3F-62	12 - 5/8	71
EGA6*3F-72	12 - 5/8	81
EGA6*3F-80	12 - 5/8	89
EGA6*3F-90	12 - 5/8	99
EGA6*3F-112	12 - 5/8	121

* Slab quantity

FACTOR TABLE

Capacity Conversion Factor for other Refrigerants

REFRIGERANT	FACTOR
R-404A	0.958
R-410A	1.053
R-134A	0.086
R-407F	1.008
R-407A	0.988
R-407C	0.988
R-449A	0.997
R-450A	0.810
R-513A	0.914

Factor must be applied based on R-448A data

Operating Charge Conversion Factor for other Refrigerants

REFRIGERANT	FACTOR
R-404A	0.945
R-410A	0.960
R-134A	1.026
R-407F	1.000
R-407A	1.000
R-407C	1.000
R-449A	1.000
R-450A	1.026
R-513A	1.026

Factor must be applied based on R-448A

REACH-IN UNIT COOLERS



THE ONLINE PRODUCT LINECARD IS A QUICK AND PRACTICAL WAY TO GET THE MOST UPDATED DATA AND FEATURES ON THE ENTIRE REFPLUS REFRIGERATION EQUIPMENT LINE.

SCAN ME

EDA AIR DEFROST / DUAL-FLOW FOR COOLERS ABOVE +34°F



EDA

MODEL	CFM	CAPACITY (BMH) R-448A (>85% RH)				R-448A OPERATING CHARGE (LB.)	STOCK UNIT SHIPPING WEIGHT (LB.)	UNIT DIMENSIONS (INCHES)				
		8°FTD	10°FTD	12°FTD	15°FTD			W	H	A	B	D
EDA-102	196	830	1,040	1,250	1,560	0.39	12	18 1/8	3 1/2	17	10	14 1/8
EDA-132	186	1,090	1,360	1,630	2,040	0.54	13	18 1/8	3 1/2	17	10	14 1/8
EDA-152	246	1,260	1,570	1,880	2,360	0.54	13	18 1/8	4 1/2	17	10	14 1/8
EDA-182	226	1,500	1,880	2,260	2,820	0.73	14	18 1/8	4 1/2	17	10	14 1/8
EDA-232	505	1,920	2,400	2,880	3,600	0.54	17	18 1/8	5 1/2	19	13	17 1/8
EDA-282	450	2,260	2,820	3,380	4,230	0.83	19	20 1/8	5 1/2	19	13	17 1/8
EDA-332	430	2,840	3,550	4,260	5,330	1.07	20	20 1/8	5 1/2	19	13	17 1/8

- Top mounted
- Aluminum cabinet
- Dual coil
- Available for 120/1/60 or 208-240/1/60
- Copper tubing is clear coated for full protection against acidic substances

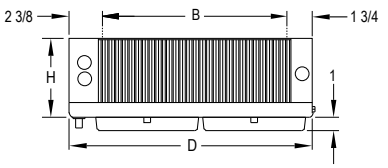

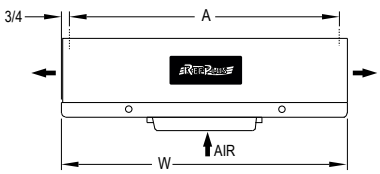

ECA AIR DEFROST FOR COOLERS ABOVE +34°F



ECA

MODEL	CFM	CAPACITY (BMH) R-448A (>85% RH)				R-448A OPERATING CHARGE (LB.)	STOCK UNIT SHIPPING WEIGHT (LB.)
		8°FTD	10°FTD	12°FTD	15°FTD		
ECA-101	220	830	1,040	1,250	1,560	0.34	11
ECA-131	200	1,090	1,360	1,630	2,040	0.54	12
ECA-151	190	1,260	1,570	1,880	2,360	0.71	13

- Top or wall mounted
- Aluminum cabinet
- Single coil
- Available for 120/1/60 or 208-240/1/60
- Copper tubing is clear coated for full protection against acidic substances

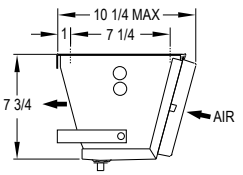

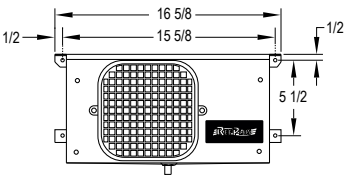

REACH-IN UNIT COOLERS

ESA AIR DEFROST — FOR COOLERS ABOVE +34°F



ESA

MODEL	CFM	CAPACITY (BMH) R-448A (>85% RH)				R-448A OPERATING CHARGE (LB.)	STOCK UNIT SHIPPING WEIGHT (LB.)	UNIT DIMENSIONS (INCHES)				
		8°FTD	10°FTD	12°FTD	15°FTD			W	H	A	B	D
ESA-102	195	830	1,040	1,250	1,560	0.44	9	17 1/4	4 1/2	13	13 1/4	15
ESA-132	185	1,090	1,360	1,630	2,040	0.54	10	17 1/4	4 1/2	13	13 1/4	15
ESA-152	195	1,260	1,570	1,880	2,360	0.68	12	21 3/4	4 1/2	17 1/2	13 1/4	15
ESA-182	225	1,500	1,880	2,260	2,820	0.80	13	25 3/4	4 1/2	21 1/2	13 1/4	15
ESA-232	395	1,920	2,400	2,880	3,600	0.83	17	33 3/4	4 1/2	29 1/2	13 1/4	15
ESA-282	385	2,260	2,820	3,380	4,230	1.02	19	33 3/4	4 1/2	29 1/2	13 1/4	15
ESA-332	420	2,670	3,340	4,010	5,010	1.29	20	33 3/4	5 1/2	29 1/2	13 1/4	15
ESA-452	624	3,670	4,590	5,510	6,890	1.66	28	43 3/4	5 1/2	39 1/2	15 1/4	17
ESA-552	615	4,510	5,640	6,770	8,460	2.00	33	43 3/4	5 1/2	39 1/2	15 1/4	17

ESE ELECTRIC DEFROST — FOR COOLERS & FREEZERS FROM -10°F TO +34°F

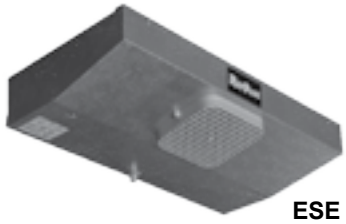

ESE

MODEL	CFM	CAPACITY (BMH) R-448A (>85% RH)			R-448A OPERATING CHARGE (LB.)	STOCK UNIT SHIPPING WEIGHT (LB.)	UNIT DIMENSIONS (INCHES)				
		-20°F	0°F	+20°F			W	H	A	B	D
ESE-102	195	N/A	N/A	N/A	0.41	9	17 1/4	4 1/2	13	13 1/4	15
ESE-132	185	N/A	N/A	N/A	0.51	10	17 1/4	4 1/2	13	13 1/4	15
ESE-152	195	1,330	1,450	1,570	0.63	12	21 3/4	4 1/2	17 1/2	13 1/4	15
ESE-182	225	1,600	1,740	1,880	0.71	13	25 3/4	4 1/2	21 1/2	13 1/4	15
ESE-232	395	N/A	N/A	N/A	0.73	17	33 3/4	4 1/2	29 1/2	13 1/4	15
ESE-282	385	2,480	2,700	2,920	0.93	19	33 3/4	4 1/2	29 1/2	13 1/4	15
ESE-332	420	2,930	3,190	3,450	1.19	20	33 3/4	5 1/2	29 1/2	13 1/4	15
ESE-452	624	3,990	4,350	4,700	1.53	28	43 3/4	5 1/2	39 1/2	15 1/4	17
ESE-552	615	N/A	N/A	N/A	1.85	33	43 3/4	5 1/2	39 1/2	15 1/4	17

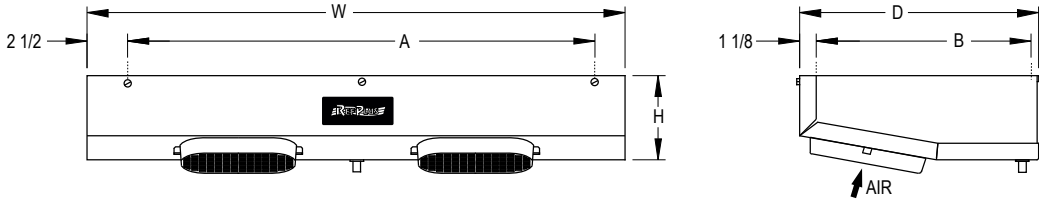

- Top mounted
- Aluminum cabinet
- Single coil
- Available for 120/1/60 or 208-240/1/60
- Copper tubing is clear coated for full protection against acidic substances

SCAN ME

ONLINE PRODUCT LINECARD

REACH-IN UNIT COOLERS

EWA AIR DEFROST — FOR COOLERS ABOVE +34°F



EWA

MODEL	CFM	CAPACITY (BMH) R-448A (>85% RH)				DIMENSIONS	R-448A OPERATING CHARGE (LB.)	STOCK UNIT SHIPPING WEIGHT (LB.)
		8°FTD	10°FTD	12°FTD	15°FTD	D		
EWA-130	220	1,090	1,360	1,630	2,040	15 3/4	0.51	13
EWA-180	200	1,500	1,880	2,260	2,820	15 3/4	0.76	14
EWA-230	380	1,920	2,400	2,880	3,600	21 3/4	1.02	17

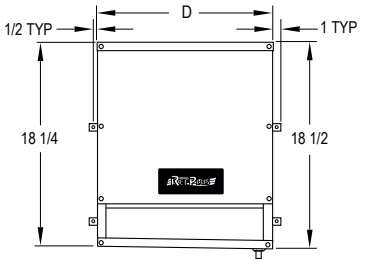

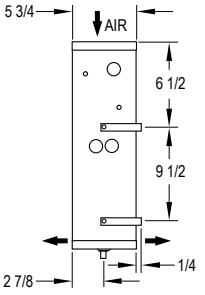

- Ceilling or mullion mounted
- Aluminum cabinet
- Single coil
- Available for 120/1/60 or 208-240/1/60
- Copper tubing is clear coated for full protection against acidic substances

EUROLINE

UDA AIR DEFROST - DUAL-FLOW — FOR COOLERS ABOVE +34°F



UDA

MODEL	CFM	MOTOR QTY	CAPACITY (BMH) R-448A (>85% RH)				R-448A OPERATING CHARGE (LB.)	STOCK UNIT SHIPPING WEIGHT (LB.)	UNIT DIMENSIONS (INCHES)				
			8°FTD	10°FTD	12°FTD	15°FTD			W	H	A	B	C
UDA-090	220	1	750	940	1,130	1,410	0.39	15	22 1/2	5	20	9 1/4	16 1/2
UDA-110	200	1	920	1,150	1,380	1,730	0.58	16	22 1/2	5	20	9 1/4	16 1/2
UDA-130	240	1	1,090	1,360	1,630	2,040	0.58	16	22 1/2	5	20	9 1/4	16 1/2
UDA-150	220	1	1,260	1,570	1,880	2,360	0.78	18	22 1/2	5	20	9 1/4	16 1/2
UDA-180	210	1	1,500	1,880	2,260	2,820	0.93	19	22 1/2	5	20	9 1/4	16 1/2
UDA-230	410	1	1,920	2,400	2,880	3,600	0.83	19	24 1/8	6	21 5/8	12 1/4	19 1/2
UDA-280	400	1	2,260	2,820	3,380	4,230	1.12	20	24 1/8	6	21 5/8	12 1/4	19 1/2
UDA-330	440	1	2,670	3,340	4,010	5,010	1.41	23	24 1/8	6	21 5/8	12 1/4	19 1/2

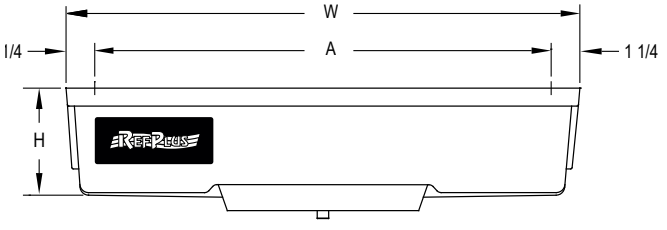

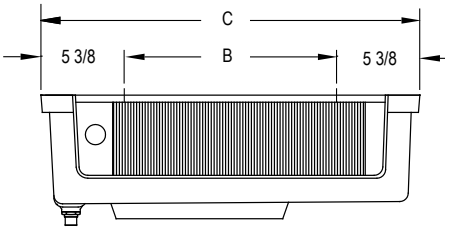

- Ceilling mounted
- Polymer cabinet
- Dual coil
- Available for 120/1/60 or 208-240/1/60
- Copper tubing is clear coated for full protection against acidic substances

For More Product Details, Specification And Pricing, Please Contact Your Local Branch.

WALK-IN COOLERS / FREEZERS

REFPLUS

AWEF REGISTERED

LS SERIES

LOW-SILHOUETTE COMMERCIAL EVAPORATORS



LS

- Ceiling mountable
- EC motors (two-speed or high-speed)
- Air throw up to 50 feet
- Stucco aluminum cabinet
- Inserted Incoloy electric defrost heaters (LSE model only)
- Ready for low GWP refrigerant and CO_2 applications
- Standard units have 6 FPI coil.

LSA AIR DEFROST FOR COOLERS ABOVE +34°F

MODEL	CFM	CAPACITY (MBH) R-448A (>85% RH)				MOTOR QTY	FAN MOTOR 120/1/60		R-448A OPERATING CHARGE (LB.)	STANDARD UNIT SHIPPING WEIGHT (LB.)
		8°FTD	10°FTD	12°FTD	15°FTD		FLA	MCA		
LSA-0451	1,060	3.76	4.70	5.64	7.05	1	1.10	1.38	0.85	26
LSA-0551	950	4.59	5.74	6.89	8.61	1	1.10	1.38	1.29	29
LSA-0651	950	5.43	6.79	8.15	10.19	1	1.10	1.38	1.29	30
LSA-0751	1,900	6.26	7.83	9.40	11.75	2	2.20	2.48	1.27	38
LSA-0921	1,700	7.68	9.60	11.52	14.40	2	2.20	2.48	1.90	42
LSA-1081	1,700	9.02	11.28	13.54	16.92	2	2.20	2.48	1.90	42
LSA-1301	1,900	10.86	13.57	16.28	20.36	2	2.20	2.48	2.31	47
LSA-1401	3,200	11.70	14.62	17.54	21.93	3	3.30	3.58	2.22	58
LSA-1601	2,799	13.36	16.70	20.04	25.05	3	3.30	3.58	3.34	67
LSA-1901	2,799	15.87	19.84	23.81	29.76	3	3.30	3.58	3.34	68
LSA-2301	3,800	19.21	24.01	28.81	36.02	4	4.40	4.68	4.36	88
LSA-2601	3,800	21.71	27.14	32.57	40.71	4	4.40	4.68	4.36	89
LSA-3201	4,700	26.73	33.41	40.09	50.12	5	5.50	5.78	5.38	108
LSA-3901	5,599	32.58	40.72	48.86	61.08	6	6.60	6.88	6.43	127

# FAN	UNIT DIMENSIONS (INCHES)		
	W*	H*	A*
1 X 1	32	15 7/8	21 1/4
1 X 2	52	15 7/8	41 1/4
1 X 3	72	15 7/8	61 1/4
1 X 4	92	16 3/8	81 1/4
1 X 5	112	16 1/2	101 1/4
1 X 6	132	16 1/2	121 1/4

LSE ELECTRIC DEFROST FOR COOLERS & FREEZERS FROM -30°F TO +34°F

MODEL	CFM	CAPACITY (MBH) R-448A (>85% RH)				MOTOR QTY	120/1/60					R-448A OPERATING CHARGE (LB.)	STANDARD UNIT SHIPPING WEIGHT (LB.)
							FAN MOTOR		HEATER				
		-40°F	-20°F	0°F	+20°F		FLA	MCA	KW	FLA	MCA		
LSE-0431	1,060	3.46	3.82	4.15	4.49	1	1.10	1.38	0.96	4.00	5.00	0.71	27
LSE-0521	950	4.18	4.61	5.02	5.43	1	1.10	1.38	0.96	4.00	5.00	1.15	30
LSE-0621	950	4.98	5.50	5.99	6.47	1	1.10	1.38	0.96	4.00	5.00	1.15	31
LSE-0721	1,900	5.79	6.39	6.95	7.52	2	2.20	2.48	1.50	6.25	7.81	1.05	40
LSE-0881	1,700	7.07	7.81	8.50	9.19	2	2.20	2.48	1.50	6.25	7.81	1.68	44
LSE-1031	1,700	8.28	9.14	9.95	10.75	2	2.20	2.48	1.50	6.25	7.81	1.68	44
LSE-1241	1,900	9.97	11.00	11.97	12.95	2	2.20	2.48	1.92	8.00	10.00	2.05	49
LSE-1331	3,200	10.77	11.89	12.94	13.99	3	3.30	3.58	2.88	12.00	15.00	1.85	60
LSE-1521	2,799	12.22	13.49	14.68	15.87	3	3.30	3.58	2.88	12.00	15.00	2.97	70
LSE-1801	2,799	14.47	15.97	17.38	18.79	3	3.30	3.58	2.88	12.00	15.00	2.97	71
LSE-2201	3,800	17.69	19.52	21.25	22.97	4	4.40	4.68	3.84	16.00	20.00	3.87	92
LSE-2401	3,800	19.29	21.30	23.18	25.06	4	4.40	4.68	3.84	16.00	20.00	3.87	93
LSE-3001	4,700	24.12	26.62	28.97	31.32	5	5.50	5.78	4.80	20.00	25.00	4.80	112
LSE-3701	5,599	29.74	32.83	35.73	38.63	6	6.60	6.88	5.76	24.00	30.00	5.70	132

SCAN ME

ONLINE PRODUCT LINECARD

For More Product Details, Specification And Pricing, Please Contact Your Local Branch.

WALK-IN COOLERS / FREEZERS

RefPlus

AWEF REGISTERED

LS SERIES

LOW-SILHOUETTE COMMERCIAL EVAPORATORS

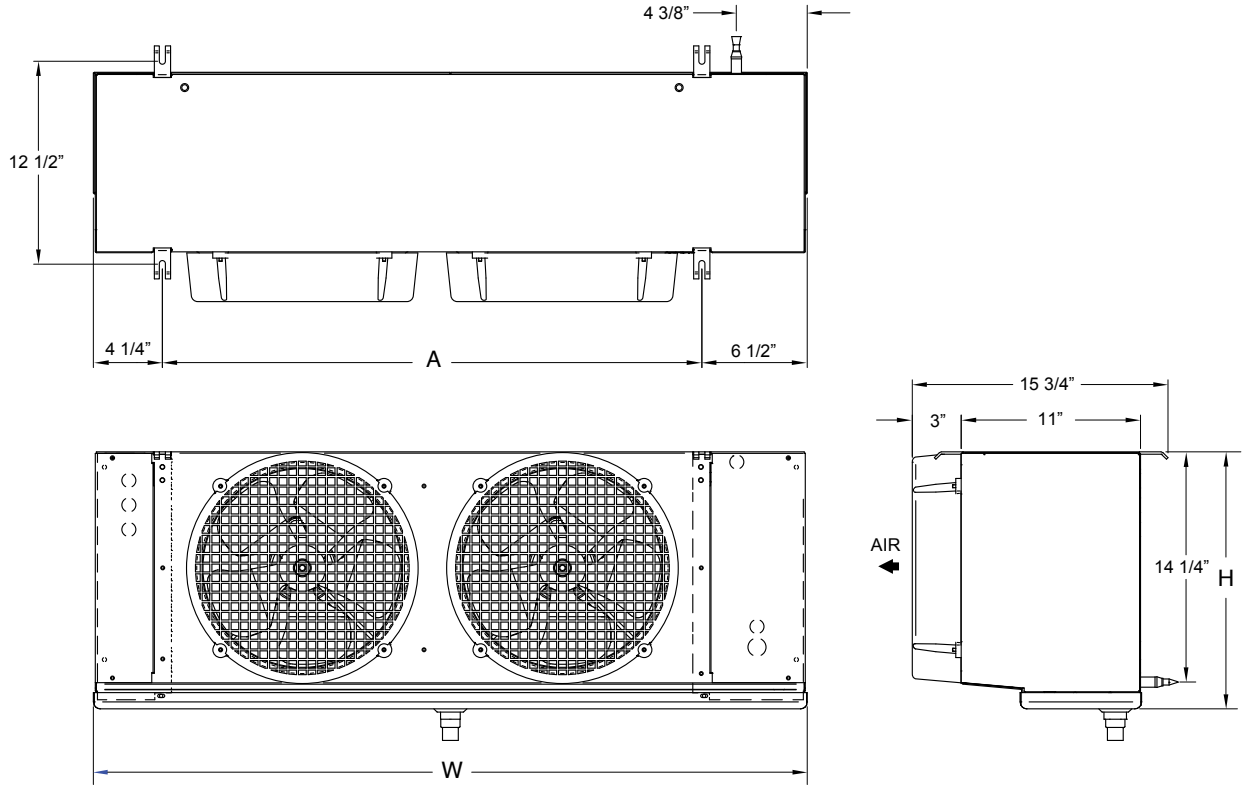

SMART DEFROST CONTROLLER

Guardian+ SMART EVAPORATOR CONTROL RC-S



Redefining Defrost & Temperature Control

Guardian+ Smart Evaporator Controller controls both temperature and defrost, providing you with precision setpoint and temperature measurement. It also provides energy savings, 15 to 50% over mechanically controlled systems. Ideal for walk-in coolers, closed door display cases, refrigerated warehouses, meat prep rooms, walk-in freezers and blast freezers.

- Accurate temperature control helps increase product shelf life
- Visual Alarms – High temp/Low temp/Sensor failure
- Compressor protection – Maximum starts per hour
- Local/Web-based access to monitor and control system operations (Smart Access)
- Key pad lockout prevents unauthorized adjustments

For More Product Details, Specification And Pricing, Please Contact Your Local Branch.

WALK-IN COOLERS / FREEZERS

REFPLUS

AWEF REGISTERED

LAA / LAE SERIES

COMMERCIAL LOW VELOCITY BLOW-THROUGH EVAPORATORS

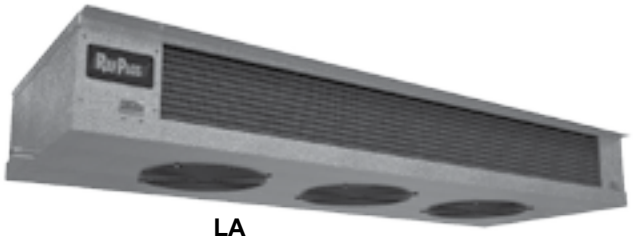

LA

- Ceiling mountable
- EC motors (two-speed or high-speed)
- Air throw up to 15 feet each side
- Stucco aluminum cabinet
- Inserted Incoloy electric defrost heaters (LAE model only)
- Ready for low GWP refrigerant and CO_2 applications
- Standard units have 6 FPI coils

LAA AIR DEFROST FOR COOLERS ABOVE +34°F

MODEL	CFM	CAPACITY (MBH) R-448A (>85% RH)				MOTOR QTY	FAN MOTOR 120/1/60		FAN MOTOR 240/1/60		R-448A OPERATING CHARGE (LB.)	STANDARD UNIT SHIPPING WEIGHT (LB.)
		8°FTD	10°FTD	12°FTD	15°FTD		FLA	MCA	FLA	MCA		
LAA-0601	1,040	5.01	6.26	7.51	9.39	2	0.58	0.65	0.32	0.36	1.27	96
LAA-0751	1,000	6.26	7.83	9.40	11.75	2	0.58	0.65	0.32	0.36	2.29	113
LAA-0951	980	7.94	9.92	11.90	14.88	2	0.58	0.65	0.32	0.36	3.07	120
LAA-1201	1,620	10.02	12.53	15.04	18.80	3	0.87	0.94	0.48	0.52	3.36	158
LAA-1501	1,560	12.53	15.66	18.79	23.49	3	0.87	0.94	0.48	0.52	4.43	168
LAA-1801	1,920	15.03	18.79	22.55	28.19	4	1.16	1.23	0.64	0.68	5.80	215
LAA-2401	2,510	20.05	25.06	30.07	37.59	5	1.45	1.52	0.80	0.84	7.21	265
LAA-2801	2,880	23.38	29.23	35.08	43.85	6	1.74	1.81	0.96	1.00	8.57	310
LAA-3001	3,810	25.06	31.32	37.58	46.98	3	3.30	3.58	2.28	2.47	7.21	255
LAA-3601	4,930	30.06	37.58	45.10	56.37	4	4.40	4.68	3.04	3.23	8.57	302
LAA-4201	6,162	35.08	43.85	52.62	65.78	5	5.50	5.78	3.80	3.99	10.76	302
LAA-4601	7,400	38.42	48.02	57.62	72.03	6	6.60	6.88	4.56	4.75	12.86	355

LAE ELECTRIC DEFROST FOR COOLERS & FREEZERS FROM +26°F TO +34°F

MODEL	CFM	CAPACITY (MBH) R-448A (>85% RH)				MOTOR QTY	240/1/60					208-240/3/60					R-448A OPERATING CHARGE (LB.)	STANDARD UNIT SHIPPING WEIGHT (LB.)
							FAN MOTOR		HEATER			FAN MOTOR		HEATER				
		8°FTD	10°FTD	12°FTD	15°FTD		FLA	MCA	KW	FLA	MCA	FLA	MCA	KW	FLA	MCA		
LAE-0571	1,040	4.76	5.95	7.14	8.93	2	0.32	0.36	1.50	6.25	7.81	0.32	0.36	2.00	4.81	6.01	0.83	107
LAE-0721	1,000	6.02	7.52	9.02	11.28	2	0.32	0.36	1.92	8.00	10.00	0.32	0.36	2.56	6.16	7.70	1.80	126
LAE-0901	980	7.52	9.40	11.28	14.10	2	0.32	0.36	1.92	8.00	10.00	0.32	0.36	2.56	6.16	7.70	2.58	133
LAE-1141	1,620	9.52	11.90	14.28	17.85	3	0.48	0.52	2.88	12.00	15.00	0.48	0.52	3.83	9.21	11.51	2.58	174
LAE-1431	1,560	11.94	14.93	17.92	22.40	3	0.48	0.52	2.88	12.00	15.00	0.48	0.52	3.83	9.21	11.51	3.70	184
LAE-1701	1,920	14.20	17.75	21.30	26.63	4	0.64	0.68	3.84	16.00	20.00	0.64	0.68	5.11	12.29	15.36	4.87	241
LAE-2301	2,510	19.21	24.01	28.81	36.02	5	0.80	0.84	4.80	20.00	25.00	0.80	0.84	6.39	15.37	19.21	5.99	298
LAE-2701	2,880	22.55	28.19	33.83	42.29	6	0.96	1.00	5.76	24.00	30.00	0.96	1.00	7.67	18.45	23.06	7.11	350
LAE-2861	3,810	23.89	29.86	35.83	44.79	3	2.28	2.47	4.80	20.00	25.00	2.28	2.47	6.39	15.37	19.21	5.99	288
LAE-3431	4,930	28.65	35.81	42.97	53.72	4	3.04	3.23	5.76	24.00	30.00	3.04	3.23	7.67	18.45	23.06	7.11	342
LAE-4001	6,162	33.41	41.76	50.11	62.64	5	3.80	3.99	4.80	20.00	25.00	3.80	3.99	6.39	15.37	19.21	9.60	335
LAE-4381	7,400	36.58	45.73	54.88	68.60	6	4.56	4.75	5.76	24.00	30.00	4.56	4.75	7.67	18.45	23.06	11.4	395

WALK-IN COOLERS / FREEZERS

REFPLUS

AWEF REGISTERED

LPA / LPE SERIES

COMMERCIAL MEDIUM VELOCITY BLOW-THROUGH EVAPORATORS

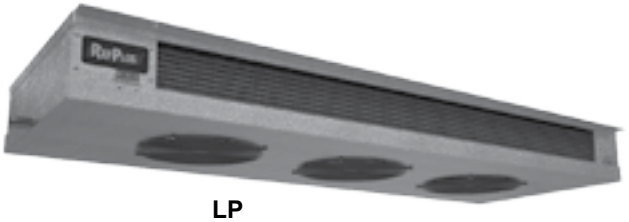

LP

- Ceiling mountable
- EC motors (two-speed or high-speed)
- Air throw up to 25 feet each side
- Stucco aluminum cabinet
- Inserted Incoloy electric defrost heaters (LPE model only)
- Ready for low GWP refrigerant and CO_2 applications
- Standard units have 6 FPI coils

LPA AIR DEFROST FOR COOLERS ABOVE +34°F

MODEL	CFM	CAPACITY (MBH) FOR R-448A (>85% RH)				MOTOR QTY	FAN MOTOR 120/1/60		FAN MOTOR 240/1/60		R-448A OPERATING CHARGE (LB.)	STANDARD UNIT SHIPPING WEIGHT (LB.)
		8°FTD	10°FTD	12°FTD	15°FTD		FLA	MCA	FLA	MCA		
LPA-0601	800	5.01	6.26	7.51	9.39	2	0.58	0.65	0.32	0.36	1.27	95
LPA-0701	880	5.85	7.31	8.77	10.97	2	0.58	0.65	0.32	0.36	1.56	105
LPA-0801	850	6.68	8.35	10.02	12.53	2	0.58	0.65	0.32	0.36	2.05	110
LPA-1001	1,350	8.35	10.44	12.53	15.66	3	0.87	0.94	0.48	0.52	2.24	145
LPA-1201	1,249	10.02	12.53	15.04	18.80	3	0.87	0.94	0.48	0.52	2.97	152
LPA-1601	1,660	13.36	16.70	20.04	25.05	4	1.16	1.23	0.64	0.68	3.90	195
LPA-2001	2,090	16.70	20.88	25.06	31.32	5	1.45	1.52	0.80	0.84	4.77	240
LPA-2101	3,199	17.54	21.92	26.30	32.88	3	3.30	3.58	2.28	2.47	4.43	168
LPA-2401	2,499	20.05	25.06	30.07	37.59	6	1.74	1.81	0.96	1.00	5.70	282
LPA-2801	4,200	23.38	29.23	35.08	43.85	4	4.40	4.68	3.04	3.23	5.80	216
LPA-3501	5,400	29.23	36.54	43.85	54.81	5	5.50	5.78	3.80	3.99	7.21	266
LPA-4201	6,500	35.08	43.85	52.62	65.78	6	6.60	6.88	4.56	4.75	8.57	315

LPE ELECTRIC DEFROST FOR COOLERS & FREEZERS FROM +26°F TO +34°F

MODEL	CFM	CAPACITY (MBH) FOR R-448A (>85% RH)				R-448A OPERATING CHARGE (LB.)	STANDARD UNIT SHIPPING WEIGHT (LB.)	MOTOR QTY	240/1/60					208-240/3/60				
									FAN MOTOR		HEATER			FAN MOTOR		HEATER		
		8°FTD	10°FTD	12°FTD	15°FTD				FLA	MCA	KW	FLA	MCA	FLA	MCA	KW	FLA	MCA
LPE-0571	800	4.76	5.95	7.14	8.93	0.83	105	2	0.32	0.36	1.50	6.25	7.81	0.32	0.36	2.00	4.81	6.01
LPE-0671	880	5.59	6.99	8.39	10.49	1.02	118	2	0.32	0.36	1.92	8.00	10.00	0.32	0.36	2.56	6.16	7.70
LPE-0761	850	6.34	7.93	9.52	11.90	1.56	123	2	0.32	0.36	1.92	8.00	10.00	0.32	0.36	2.56	6.16	7.70
LPE-0951	1,350	7.94	9.92	11.90	14.88	1.46	161	3	0.48	0.52	2.88	12.00	15.00	0.48	0.52	3.83	9.21	11.51
LPE-1151	1,249	9.61	12.01	14.41	18.02	2.24	168	3	0.48	0.52	2.88	12.00	15.00	0.48	0.52	3.83	9.21	11.51
LPE-1521	1,660	12.70	15.87	19.04	23.81	2.92	221	4	0.64	0.68	3.84	16.00	20.00	0.64	0.68	5.11	12.29	15.36
LPE-1901	2,090	15.87	19.84	23.81	29.76	3.60	273	5	0.80	0.84	4.80	20.00	25.00	0.80	0.84	6.39	15.37	19.21
LPE-2001	3,199	16.70	20.88	25.06	31.32	3.70	184	3	2.28	2.47	2.88	12.00	15.00	2.28	2.47	3.83	9.21	11.51
LPE-2301	2,499	19.21	24.01	28.81	36.02	4.29	322	6	0.96	1.00	5.76	24.00	30.00	0.96	1.00	7.67	18.45	23.06
LPE-2701	4,200	22.55	28.19	33.83	42.29	4.87	242	4	3.04	3.23	3.84	16.00	20.00	3.04	3.23	5.11	12.29	15.36
LPE-3341	5,400	27.90	34.87	41.84	52.31	5.99	299	5	3.80	3.99	4.80	20.00	25.00	3.80	3.99	6.39	15.37	19.21
LPE-4001	6,500	33.41	41.76	50.11	62.64	7.11	355	6	4.56	4.75	5.76	24.00	30.00	4.56	4.75	7.67	18.45	23.06

For More Product Details, Specification And Pricing, Please Contact Your Local Branch.

WALK-IN COOLERS / FREEZERS

REFPLUS

AWEF REGISTERED

LA / LP SERIES

COMMERCIAL MEDIUM VELOCITY EVAPORATORS

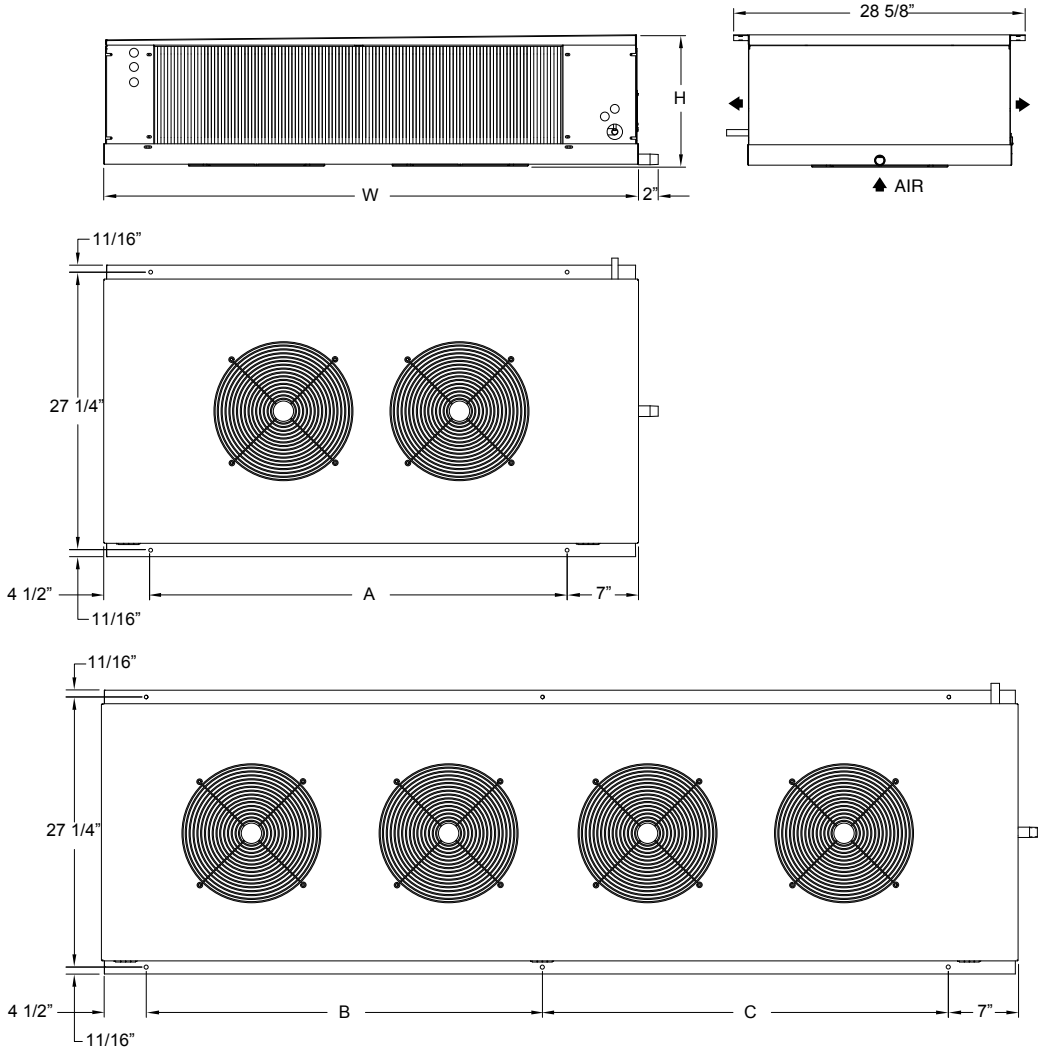

* ±1/2"

# FAN	# MODEL	UNIT DIMENSIONS (INCHES)				
		W*	H*	B*	C*	A*
1 X 2	LAA 0601 / LAE, LAG, LAH 0571	44 1/2	10 1/8	-	-	33
1 X 2	LAA 0751 & 0951 / LAE, LAG, LAH 0721 & 0901	52 1/2	10 1/8	-	-	41
1 X 3	LAA 1201 & 1501 / LAE, LAG, LAH 1141 & 1431	72 1/2	10 3/8	-	-	61
1 X 3	LAA 3001 / LAE, LAG, LAH 2861	112 1/2	13 1/8	40	61	-
1 X 4	LAA 1801 / LAE, LAG, LAH 1701	92 1/2	10 3/8	40	41	-
1 X 4	LAA 3601 / LAE, LAG, LAH 3431	132 1/2	13 1/8	60	61	-
1 X 5	LAA 2401 / LAE, LAG, LAH 2301	112 1/2	10 5/8	40	61	-
1 X 5	LAA 4201 / LAE, LAG, LAH 4001	112 1/2	18 1/8	40	61	-
1 X 6	LAA 2801 / LAE, LAG, LAH 2701	132 1/2	10 5/8	60	61	-
1 X 6	LAA 4601 / LAE, LAG, LAH 4381	132 1/2	18 1/8	60	61	-

# FAN	# MODEL	UNIT DIMENSIONS (INCHES)				
		W*	H*	B*	C*	A*
1 X 2	LPA 0601 / LPE, LPG, LPH 0571	44 1/2	7 5/8	-	-	33
1 X 2	LPA 0701 & 0801 / LPE, LPG, LPH 0671 & 0761	52 1/2	7 5/8	-	-	41
1 X 3	LPA 1001 / LPE, LPG, LPH 0951	72 1/2	7 7/8	-	-	61
1 X 3	LPA 1201 / LPE, LPG, LPH 1151	72 1/2	7 7/8	-	-	61
1 X 3	LPA 2101 / LPE, LPG, LPH 2001	72 1/2	12 7/8	-	-	61
1 X 4	LPA 1601 / LPE, LPG, LPH 1521	92 1/2	7 7/8	40	41	-
1 X 4	LPA 2 801 / LPE, LPG, LPH 2701	92 1/2	12 7/8	40	41	-
1 X 5	LPA 2001 / LPE, LPG, LPH 1901	112 1/2	8 1/8	40	61	-
1 X 5	LPA 3501 / LPE, LPG, LPH 3341	112 1/2	13 1/8	40	61	-
1 X 6	LPA 2401 / LPE, LPG, LPH 2301	132 1/2	8 1/8	60	61	-
1 X 6	LPA 4201 / LPE, LPG, LPH 4001	132 1/2	13 1/8	60	61	-

EK SERIES

COMPACT INDUSTRIAL HIGH-VELOCITY EVAPORATORS

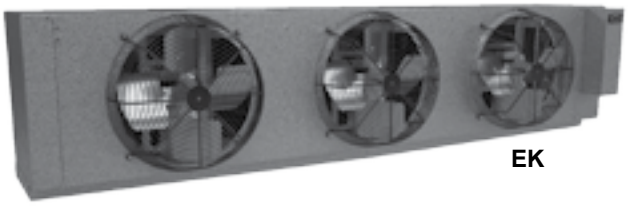

EK

- Ceiling mountable
- EC motors for AWEF models - PSC motors for non-AWEF
- Air throw up to 40 feet
- Stucco aluminum cabinet
- Inserted Incoloy electric defrost heaters (EKE model only)
- Ready for low GWP refrigerant and CO_2 applications
- EKA: above +34°F / EKE, EKR & EKT: -30°F to +34°F
- **Capacity range: 11,500 to 66,000 BTU/HR/10°F TD**

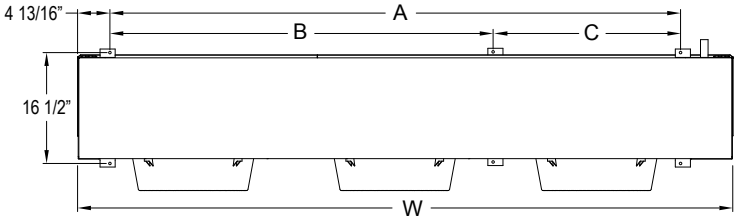

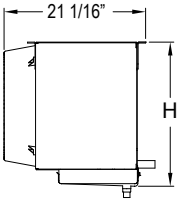

# FAN	UNIT DIMENSIONS (INCHES)				
	W*	H*	A*	B*	C*
1 X 1	43 3/8	21 3/8	30 3/4	-	-
1 X 2	51 3/8	21 3/8	38 3/4	-	-
1 X 3	91 3/8	21 1/2	-	52 1/8	26 11/16
1 X 4	111 3/8	21 5/8	-	48 3/4	50
1 X 5	131 3/8	21 3/4	-	70 3/4	48

* ±1/2"

EM SERIES

MEDIUM PROFILE INDUSTRIAL HIGH-VELOCITY EVAPORATORS

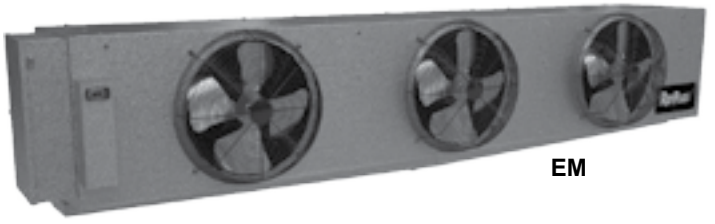

EM

- Ceiling mountable
- EC motors for AWEF models - AC motors for non-AWEF
- Air throw up to 60 feet
- Stucco aluminum cabinet
- Inserted Incoloy electric defrost heaters (EME model only)
- Ready for low GWP refrigerant and CO_2 applications
- EMA: above +34°F / EME, EMG, EMH, EMR & EMT: -30°F to +34°F
- **Capacity range: 17,750 to 155,500 BTU/HR/10°F TD**

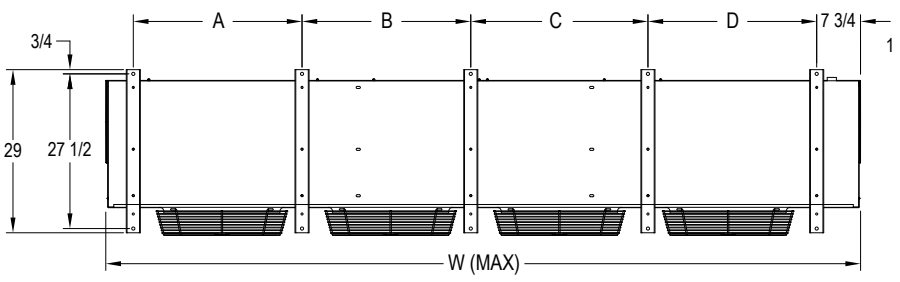

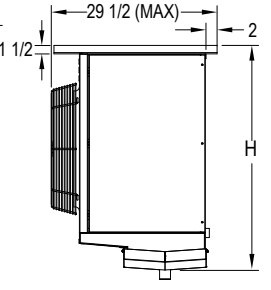

# FAN	UNIT DIMENSIONS (INCHES)					
	W*	H*	A*	B*	C*	D*
1 X 1	59	29 1/8	41 1/2	-	-	-
1 X 2	99	29 1/2	40	41 1/2	-	-
1 X 3	139	30	40	41 1/2	40	-
1 X 4	139	40	30	30	31 1/2	30

* ±1/2"

SCAN ME

ONLINE PRODUCT LINECARD

For More Product Details, Specification And Pricing, Please Contact Your Local Branch.

LM SERIES

MEDIUM PROFILE INDUSTRIAL MEDIUM-VELOCITY EVAPORATORS

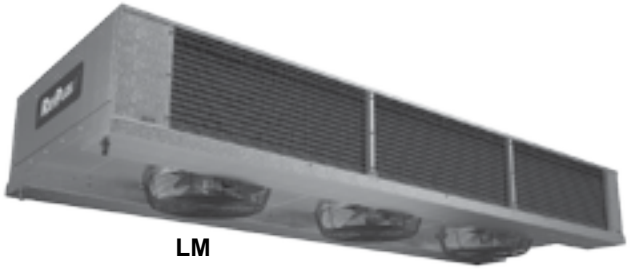

LM

- Ceiling mountable
- PSC motors
- Air throw up to 40 feet on each side
- Stucco aluminum cabinet
- Inserted Incoloy electric defrost heaters (LME model only)
- Ready for low GWP refrigerant and CO_2 applications
- LMA: above +34°F / LME, LMG, LMH, LMR & LMT: -30°F to +34°F
- **Capacity range: 23,000 to 138,000 BTU/HR/10°F TD**

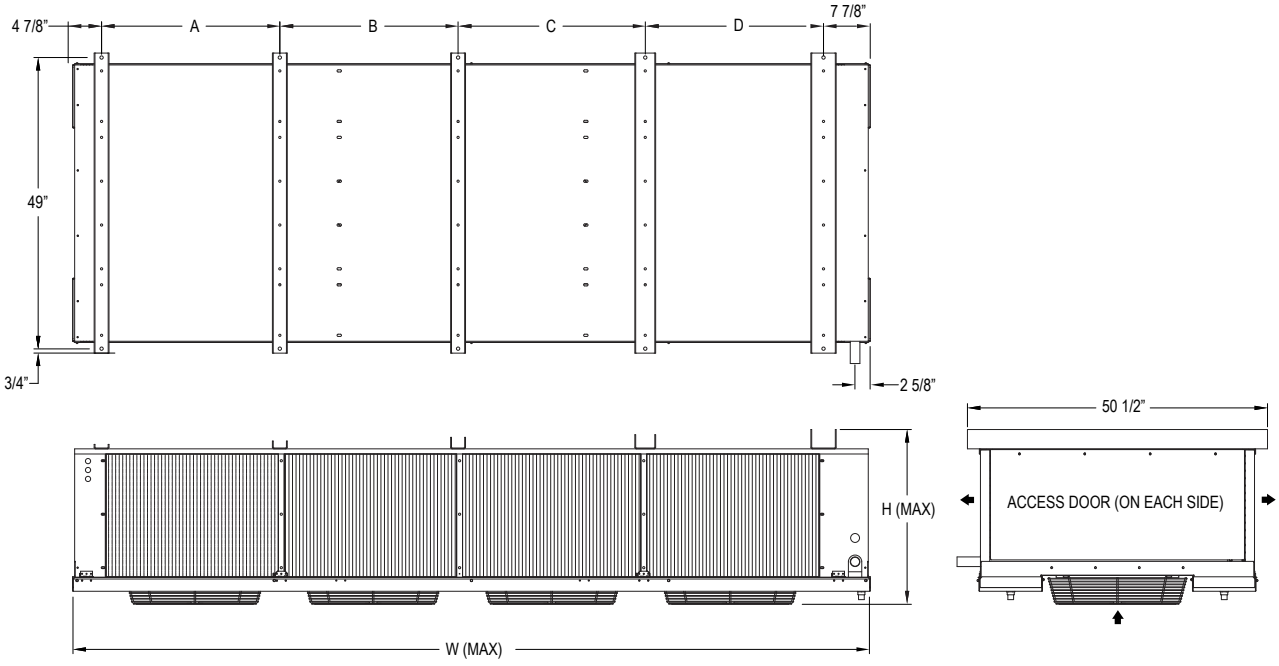

# FAN	UNIT DIMENSIONS (INCHES)					
	W*	H*	A*	B*	C*	D*
1 X 1	54 1/4	22 5/8	41 1/2	-	-	-
1 X 2	94 1/4	23 3/8	40	41 1/2	-	-
1 X 3	134 1/4	24 1/4	40	41 1/2	40	-
1 X 4	134 1/4	29 1/4	30	30	31 1/2	30

* ±1/2"

SCAN ME

ONLINE
PRODUCT
LINECARD

WALK-IN COOLERS / FREEZERS

LARGE INDUSTRIAL EVAPORATORS WITH STANDARD-EFFICIENCY MOTORS

EH/EI

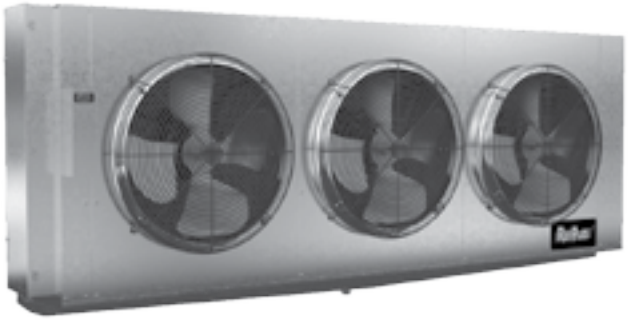

- Standard-efficiency AC fan motors (inverter duty)
- **EH**: 1HP / **EI**: 2HP
- Air throw up to 100 feet
- Galvanized steel cabinet
- Inserted Incoloy electric defrost heaters (EHE & EIE models only)
- Single coil - 6 FPI standard
- Ready for low GWP refrigerant and CO_2 applications
- **EHA**: above +34°F / All other models: -30°F to +34°F
- **Capacity range: 42,000 to 259,000 BTU/HR/10°F TD**

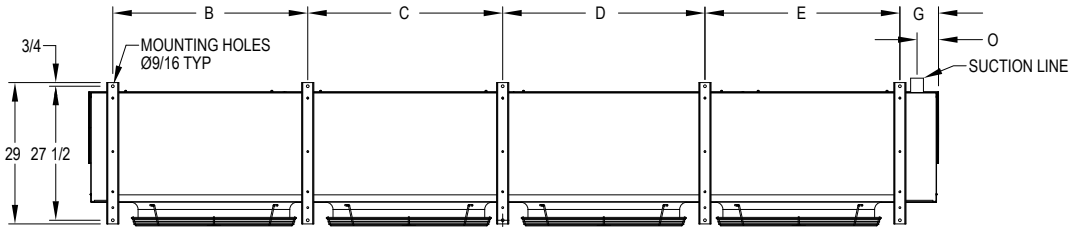

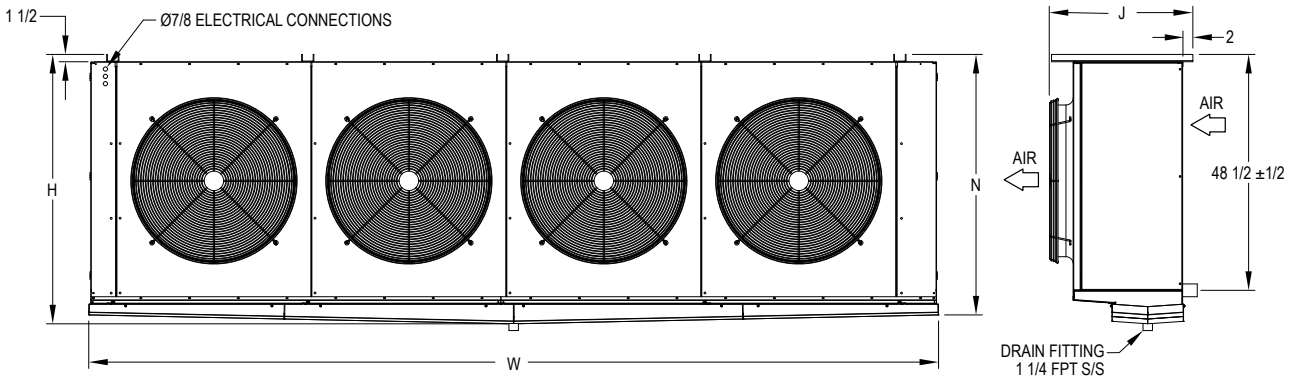

# FAN	UNIT DIMENSIONS (INCHES)															
	W** (EHA, EHE & EIE)	W** (EHR & EIR)	W** (EHT & EIT)	W** (EHG, EHH EIG & EIH)	H* (EHA, EHE & EIE)	H* (EHR & EIR)	H* (EHT & EIT)	H* (EHG, EHH EIG & EIH)	B*	C*	D*	E*	G*	J* (MAX)	N*	O*
1 X 1	54 1/4	58 3/6	57 7/8	59	54 1/4	55 1/4	55 1/4	54 1/4	41 1/2	-	-	-	7 3/4	29 1/2	53 3/4	5
1 X 2	94 1/4	99	97 7/8	99	53 3/4	55 3/4	55 3/4	54 1/2	40	41 1/2	-	-	7 3/4	29 1/2	53 3/4	4 1/2
1 X 3	134 1/4	141	139 3/8	139	55	56	56	55	40	41 1/2	40	-	7 3/4	29 1/2	53 3/4	4 1/4
1 X 4	174 1/4	181	179 1/2	179 1/4	55 1/4	56 1/2	56 1/2	55 1/4	40	40	41 1/2	40	7 7/8	29 1/4	53 1/2	4 1/2

* ±1/2"
** ±1"

For More Product Details, Specification And Pricing, Please Contact Your Local Branch.

WALK-IN COOLERS / FREEZERS

LARGE INDUSTRIAL EVAPORATORS WITH HIGH-EFFICIENCY MOTORS

EJ

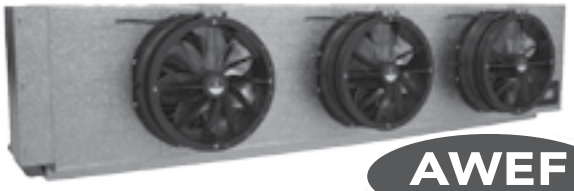

AWEF REGISTERED

- Cast aluminum high-performance fans
- High-efficiency AC motor (two speeds compatible)
- Standard 2-year warranty on fan motor assembly
- Excellent sound levels - as low as 69 DBA
- **Air throw up to 200 feet**
- Stucco aluminum cabinet
- Inserted Incoloy electric defrost heaters (EJE model only)
- Ready for low GWP refrigerant and CO_2 applications
- EJA: above +34°F / EJE, EJR, EJT, EJG & EJH: -30°F to +34°F
- **Capacity range: 28,000 to 249,000 BTU/HR/10°F TD**

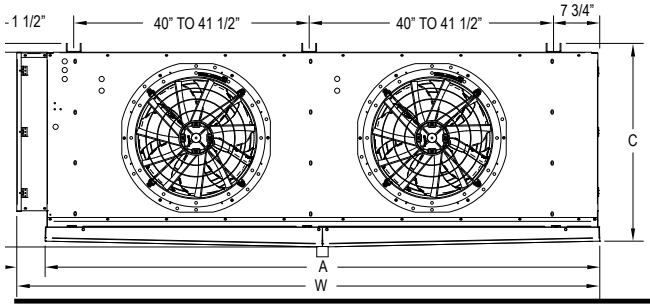

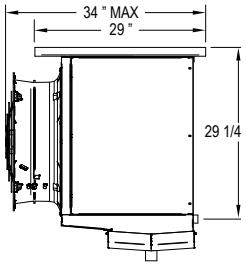

# FAN	UNIT DIMENSIONS (INCHES)			
	W*	H*	A*	C*
1 X 1	59	34 1/4	54 1/4	33 3/4
1 X 2	99	34 1/2	94 1/4	33 1/2
1 X 3	139	35	134 1/4	33 1/2
1 X 4	179 1/8	35 1/4	174 1/2	33 3/8
1 X 5	219 1/8	35 1/4	214 1/2	33 1/2

* ±1/2"

EQ/EX

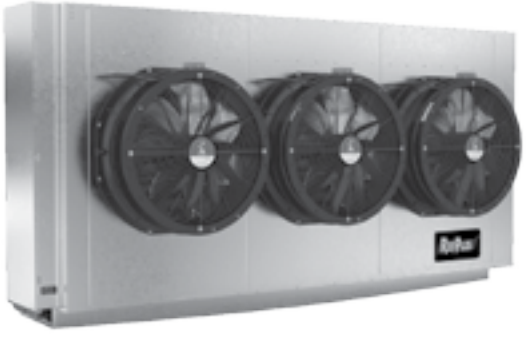

- Cast aluminum high-performance fans
- High-efficiency AC motor (two speeds compatible)
- Standard 2-year warranty on fan motor assembly
- Excellent sound levels - as low as 69 DBA
- **Air throw up to 187 feet**
- Galvanized steel cabinet
- Inserted Incoloy electric defrost heaters (EQE/EXE models only)
- Ready for low GWP refrigerant and CO_2 applications
- EQA/EXA: above +34°F / EQE, EQR, EQT, EQG, EQH, EXE, EXR, EXT, EXG, EXH -30°F to +34°F
- **Capacity range: 53,500 to 511,000 BTU/HR/10°F**

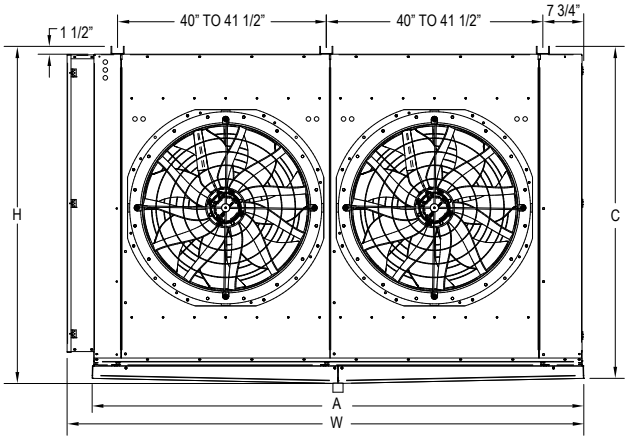

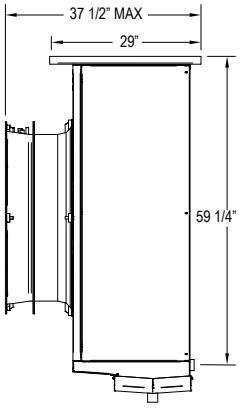

# FAN	UNIT DIMENSIONS (INCHES)			
	W*	H*	A*	C*
1 X 1	59	64 1/4	54 1/4	63 3/4
1 X 2	99	64 1/2	94 1/4	63 1/2
1 X 3	139	65	134 1/4	63 3/4
1 X 4	179	65 1/4	174 1/4	63 1/2
1 X 5	219	65 1/4	214 1/4	63 1/2

* ±1/2"

AIR COOLED CONDENSING UNITS

OE-IE EVOLUTION SERIES

OEH OUTDOOR HORIZONTAL DISCHARGE CU



- From 0.2 HP to 5 HP
- For high, medium and low temperature applications
- COPELAND Hermetic compressor
- Heavy-gauge galvanized steel base
- Galvanized outdoor protective cabinet
- Aluminum fan blades
- Baked-on powder epoxy coated fan guards/motor mounts
- Fixed head pressure flooding valve
- True sub-cooling circuits integrated into the condenser coil

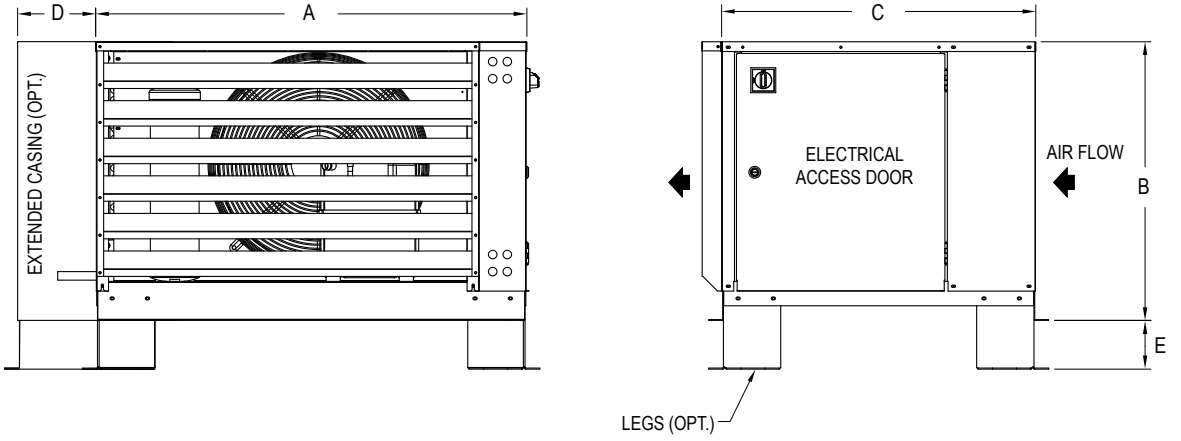

MODEL	UNIT DIMENSIONS (INCHES)				
	A	B	C	D	E
002-010	28 1/4	22 5/8	30 1/4	8	5
011-025	32 1/4	28 5/8	32 1/4	8	5
026-045	44 1/4	28 5/8	32 1/4	8	5
046-060	44 1/4	38 5/8	32 1/4	8	5

SCAN ME

ONLINE PRODUCT

For More Product Details, Specification And Pricing, Please Contact Your Local Branch.

AIR COOLED CONDENSING UNITS

IEZ-IES INDOOR HORIZONTAL DISCHARGE CU

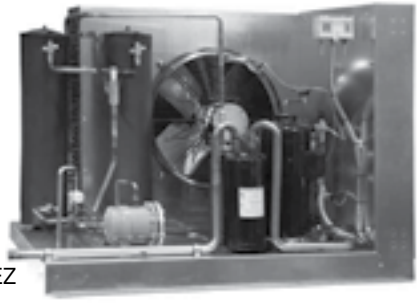

IEZ

- From 1.3 HP to 20 HP (IEZ)
- From 0.4 to 22 HP (IES)
- For high, medium and low temperature applications
- COPELAND Scroll compressors (IEZ)
- COPELAND or BITZER semi-hermetic compressors (IES)
- Heavy-gauge galvanized steel base
- Aluminum fan blades
- Baked-on powder epoxy coated fan guards/motor mounts
- True sub-cooling circuits integrated into the condenser coil

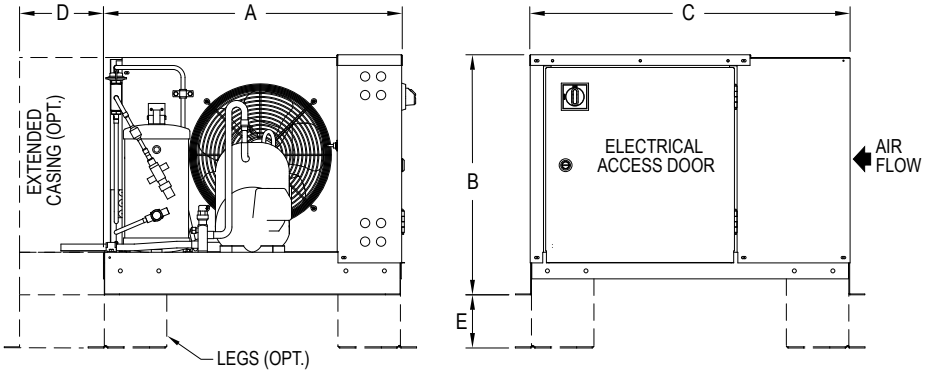

MODEL	UNIT DIMENSIONS (INCHES)				
	A	B	C	D	E
013-025	32 1/4	22 5/8	30 1/4	8	5
026-045	44 1/4	28 5/8	32 1/4	8	5
046-060	44 1/4	38 5/8	32 1/4	8	5
061-099	67 1/4	39 9/16	40 1/4	-	5
100-220	97 1/4	39 9/16	40 1/4	-	5

OEZ-OES OUTDOOR HORIZONTAL DISCHARGE CU



- From 1.3 HP to 20 HP (OEZ)
- From 0.4 to 22 HP (OES)
- For high, medium and low temperature applications
- COPELAND Scroll compressors (OEZ)
- COPELAND or BITZER semi-hermetic compressors (OES)
- Heavy-gauge galvanized steel base
- Aluminum fan blades
- Baked-on powder epoxy coated fan guards/motor mounts
- True sub-cooling circuits integrated into the condenser coil

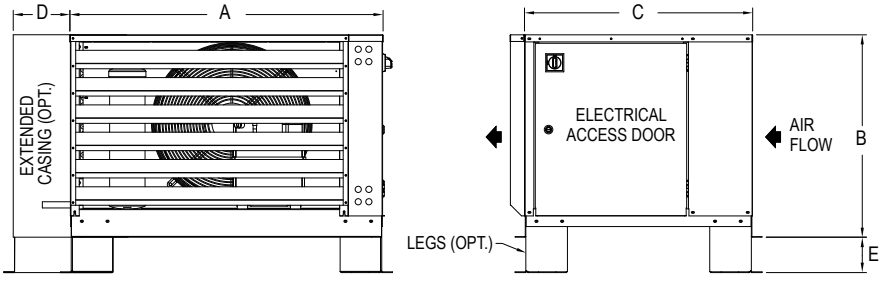

MODEL	UNIT DIMENSIONS (INCHES)				
	A	B	C	D	E
013-025	32 1/4	22 5/8	30 1/4	8	5
026-045	44 1/4	28 5/8	32 1/4	8	5
046-060	44 1/4	38 5/8	32 1/4	8	5
061-099	67 1/4	39 9/16	40 1/4	-	5
100-220	97 1/4	39 9/16	40 1/4	-	5

AIR COOLED CONDENSING UNITS

OM MEDIUM OUTDOOR VERTICAL DISCHARGE CU



- Single Compressor from 6.1 to 24 HP
- Dual Compressor from 12.2 to 48 HP
- Low, medium, medium extended & high temperature
- SmartPower version available
- CityQuiet version available
- ZeroLeak Certified

FANS	W	A1	A2
1 X 2	131 1/2	38	-
1 X 3	171 1/2	38	-
2 X 2	131 1 /2	-	73
2 X 3	1711/2	-	73

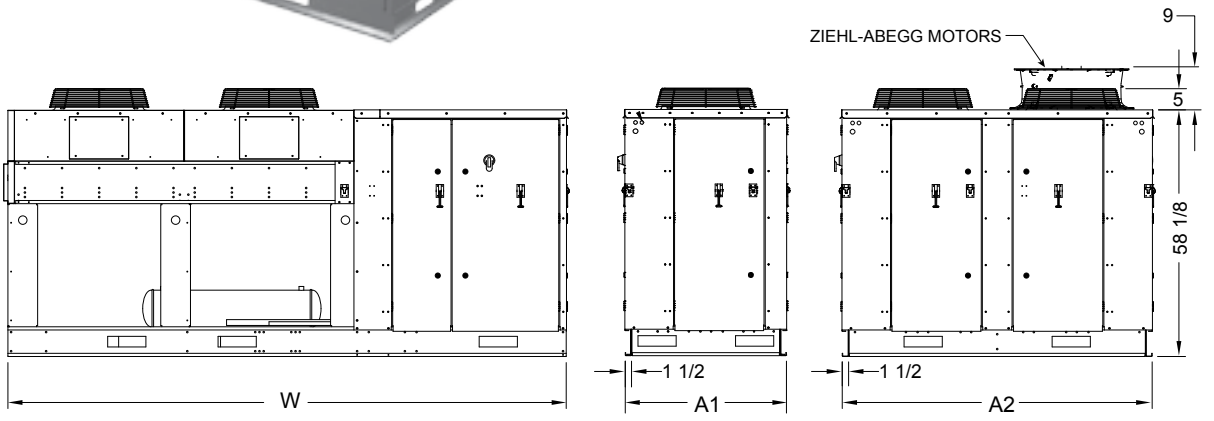

ON LARGE OUTDOOR VERTICAL DISCHARGE CU

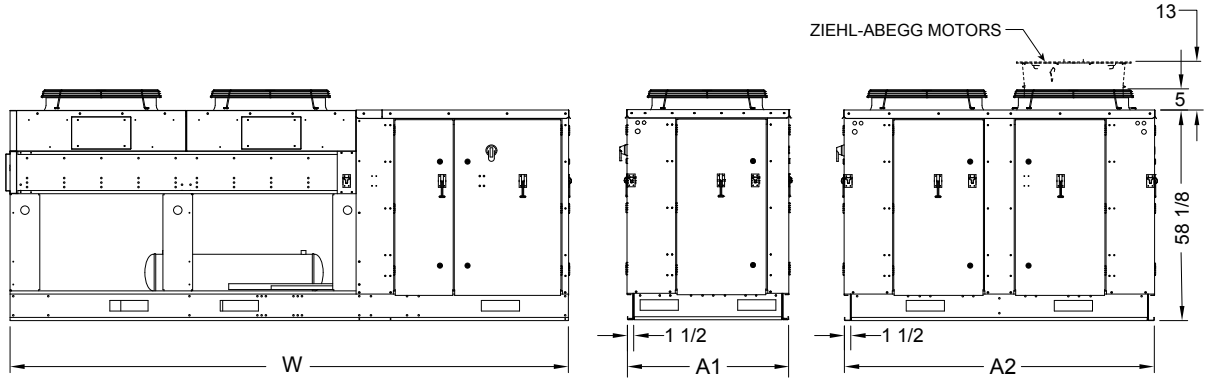

FANS	W	A1	A2
1 X 2	165 1/2	48	-
1 X 3	222 1/2	48	-
2 X 2	165 1 /2	-	93
2 X 3	2221/2	-	93

SCAN ME

ONLINE PRODUCT LINECARD

For More Product Details, Specification And Pricing, Please Contact Your Local Branch.

AIR COOLED CONDENSERS AND FLUID COOLERS

AIR COOLED CONDENSERS & FLUID COOLERS

RefPlus offers a complete line of air-cooled condensers and fluid coolers for both commercial refrigeration and air conditioning as well as industrial applications. These air-cooled flat slab or V-shaped units can be designed to meet any heat load – from as small as 19,000 Btu/hr to over 5.5 million Btu/hr. They are available in both single and multiple circuit applications. The standard flat slab units are available in low and high CFM configurations. Most importantly, all models are rated and sized according to the customer's site and requirements.

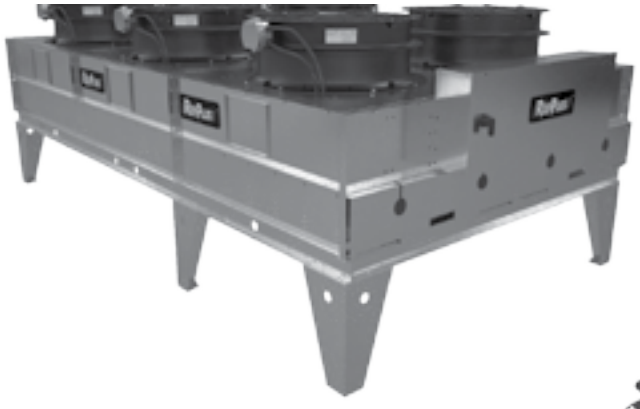

- 1X1 to 2X7 fan arrangements (flat slab)
- 1X1 to 2X10 fan arrangements (V shape)
- Available with standard-efficiency or high-efficiency fans/motors
- Galvanized steel construction
- Available for 208-240/3/60, 480/3/60 or 600/3/60

BIG-V+® FLUID COOLER



- **Up to 240,000 CFM**
- 1X1 to 2X10 fan arrangements
- 31.5" high-efficiency low noise twin speed fans
- Galvanized steel construction
- Available for 208-240/3/60, 480/3/60 or 600/3/60
- Capacities up to 3.7 Million BTUs (adiabatic version)

FLUID COOLER & PUMP PACKAGE CONTROLLER



Guardian+ RC-F

- **Total control over outlet temperature**
- Specially designed for fluid coolers
- 2-parameter quick setup
- Full remote communication capability
- Can run fluid cooler with up to 20 fans
- Can manage up to two pumps, a 3-way valve as well as an Adiabatic system

CO2 GAS COOLERS & EVAPORATORS

THE NATURAL ALTERNATIVE

RefPlus offers a full line of quality built, custom- made CO_2 gas coolers and evaporators. CO_2 systems are a green and energy efficient alternative to synthetic refrigerant systems. RefPlus CO_2 units are built with the highest standards and heavy-duty components for an extended operating life.

THE ADVANTAGES OF A CO_2 SYSTEM

RefPlus' CO_2 technology delivers very high performance and excellent heat transfer. It requires very low pumping power when CO_2 is used as secondary fluid and offers the possibility of operating with a very low condensing pressure in cold climate.

CO_2 has high-energy content at higher temperatures. The efficiency of the total system is optimal when this heat can be reclaimed for heating sanitary water or similar applications.

From an environmental perspective, CO_2 is a very attractive refrigerant with zero ODP and a GWP of 1.

As a comparison, regulated refrigerants have a GWP between 3000 and 4000 and new HFO blends have a GWP of 1500 or less.

- Environmentally-friendly refrigerant GWP=1
- No refrigerant phase out
- Heavy-duty construction - ETL & CRN
- Thick wall copper tubing for better heat transfer
- Adiabatic gas coolers available

THE REFRIGERANT FROM NATURE

CO_2 is a naturally occurring substance and abundant in the atmosphere. It is fast becoming the preferred refrigerant in food retail applications.

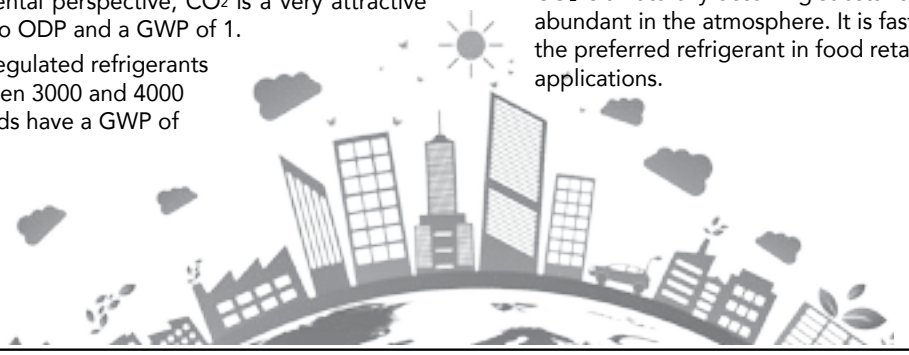

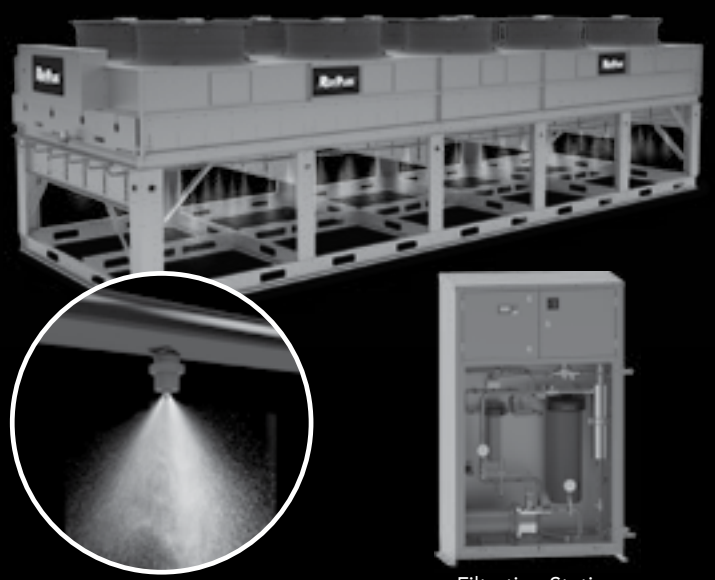

Filtration Station

Opti-Mist Plus

ADIABATIC SYSTEM

RefPlus® offers a turnkey solution to companies that prioritize efficiency, reliability and energy saving: Opti-Mist Plus. Designed for the toughest conditions, this adiabatic system substantially reduces water consumption and refrigerant charge, thus lowering operating costs by as much as 20%.

Moreover, Opti-Mist Plus completely eliminates the proliferation of bacteria, including legionella. It is available on all RefPlus condensers and chillers.

Contact a RefPlus representative today or visit RefPlus.com to find out more about the superiority of the Opti-Mist Plus system.

UNITS COOLERS

BOHN

MODELS BBM/BBL Back Bar Reach-In Unit Cooler

Application

The BB models are compact, wall-mounted units whose low height makes them ideal for undercounter reach-in or drawer-type fixtures. The unit draws air in at the bottom and discharges out the front. An optional air deflector is included and can be mounted over the center of the fan to direct air up and out. The BBM (medium temperature) model is designed for 35° to 40°F fixture temperature with off-cycle defrost. The BBL (low temperature) model is designed for 0° to -10°F fixture temperature, and has automatic electric defrost.



Features

• Master units include the basic unit plus factory mounted R-404a expansion valve, solenoid, and temperature control. Also right-hand piping extended 8" - 12" outside the housing, sealed and pressurized to 20 - 30 PSI. A 1/4" OD
liquid feed to slave is included

• Slave units include the basic unit plus factory mounted expansion valve with left-hand piping extended 8" - 12" outside the housing, sealed and pressurized to 20 - 30 PSI

Model	BTUH 10°F TD	Motor Data					Defrost Heaters		
		CFM	QTY	HP	115/1/60 Total FLA	208-230/1/60 Total FLA	Watts	115/1/60 Amps	208-23/1/60 Amps
BBL10	1,000	90	1	1/150	0.8	0.4	275	2.7	1.4
BBM11	1,100	90	1	1/150	0.8	0.4			
BBL15	1,500	180	2	1/150	1.6	0.8	350	3.5	1.7
BBM16	1,600	180	2	1/150	1.6	0.8			

Models KM and RAM

Are ideal for use in under-counter reach-in refrigerators. The thin line design allows the unit to be mounted behind the mullion with sufficient clearance for tray slides. KM has an unique fan arrangement allowing air to be drawn in at the top from both sides and discharged at the bottom for superor air circulation. RAM or Reverse Air Mullion draws air thru the coil at the bottom and discharges the cooled air out the top. This provides optimum temperature for drop in trays on salad bars or prep tables. It also keeps drawer stored product in premium condition. These versatile designs also adaptable for mounting on the back wall or ends of a cooler. The method of air circulation ensures minimum box temperature rise when the cabinet doors are open. Ideal for bottle goods and beverage coolers. The finned coil of KM and RAM is protected by BOHN-KOTE finish as standard.



Model	BTUH 10°F TD	CFM	Motor Info			Dimensions (in.)	Approx. Shipping Wt. (lbs.)
			QTY	115/1/60 Total FLA	208-230/1/60 Total FLA	Coil Inlet / Suction / Drain	
(RA)KMK13	1,300	180	2	1.6	0.8	3/8" OD / 3/8" ID / 5/8" OD	19
(RA)KMK17	1,700	170	2	1.6	0.8	3/8" OD / 3/8" ID / 5/8" OD	20
(RA)KMK23	2,300	255	3	2.4	1.2	3/8" OD / 1/2" ID / 5/8" OD	28

* 208-230V optional

UNITS COOLERS

BOHN

MODEL VA Air Defrost Unit Coolers



A deluxe unit designed for use in small reach-ins, back bar and under counter refrigerators, and many other applications where a small, compact unit is required. The thermal expansion valve mounts inside the unit. The unit can be mounted from the ceiling or off the back wall or end walls.

- Sweat inlet connection standard to reduce leaks (flare connection available as a ship loose option)
- Optional coated coil available (Model VAK) for enhanced protection in corrosive environments

* VAK models in stock

Model	BTUH 10°F TD	CFM	Motor Info			Dimensions W x D x H (in.)	Coil Inlet / Suction / Drain	Approx. Shipping Wt. (lbs.)
			QTY	115/1/60 Total FLA	208-230/1/60 Total FLA			
VAK-06	600	135	1	0.8	0.4	12.5" x 6-7/8" x 8-1/8"	3/8" OD / 3/8" ID / 1/2" OD	9
VAK-08	800	130	1	0.8	0.4	12.25" x 6-7/8" x 8-1/8"	3/8" OD / 3/8" ID / 1/2" OD	9
VAK-12	1,200	265	2	1.6	0.8	18" x 8-1/8" x 8"	3/8" OD / 3/8" ID / 1/2" OD	14
VAK-17^	1,700	245	1	1.0	0.5	14" x 10-1/2" x 9-3/4"	3/8" OD / 3/8" ID / 1/2" OD	11

^ Model available wih EC Motors

MODEL TA Thin Profile Air Defrost Reach-In Unit Cooler



A thin profile unit which mounts in the top of a refrigerator and makes the entire top shelf area usable. The attractive low silhouette makes the unit particularly desirable for display type refrigerators. It can also be used in back bars, under counter cabinets, or wherever space is at a premium.

- Drain fitting mounted at 45-degree angle so drain can be run through back or bottom of refrigerator
- Sweat inlet connection standard to reduce leaks (flare connection available as a ship loose option)

Model	BTUH 10°F TD	CFM	Motor Info			Dimensions W x D x H (in.)	Coil Inlet / Suction / Drain	Approx. Shipping Wt. (lbs.)
			QTY	115/1/60 Total FLA	208-230/1/60 Total FLA			
TA(K)10	1,000	120	1	0.8	0.4	16.5" x 14" x 4.5"	3/8" OD / 3/8" ID / 1/2" OD	14
TA(K)13	1,300	170	2	1.6	0.8	20.5" x 14" x 4.5"	3/8" OD / 3/8" ID / 1/2" OD	17
TA(K)17	1,700	210	2	1.6	0.8	24" x 15" x 4.5"	3/8" OD / 3/8" ID / 1/2" OD	21
TA(K)23	2,300	330	3	2.4	1.2	31-5/8" x 15" x 4.5"	3/8" OD / 3/8" ID / 1/2" OD	28
TA(K)30	3,000	360	3	2.4	1.2	40" x 15" x 4.5"	3/8" OD / 1/2" ID / 1/2" OD	33
TA(K)43	4,300	540	4	3.2	1.6	53-3/8" x 15" x 4.5"	1/2" OD / 5/8" ID / 1/2" OD	44
TA(K)55	5,500	650	5	4.0	2.0	53-3/8" x 15" x 6-3/4"	1/2" OD / 5/8" ID / 1/2" OD	53

* Models 43 and 55 require external equalized expansion valve

MODEL TL Thin Profile Electric Defrost Reach-In Unit Cooler



Low temperature unit cooler has a defrost system. Mounted in the top of a refrigerator, its extremely compact cabinet makes it possible to utilize the entire top shelf area for storage. Having a normal operating range of 15°F to -20°F, this unit is ideally suited for such applications as commercial freezers, ice cream boxes and bakery freezers.

- Electric defrost ensures positive heat source
- Built-in fan delay allows coil to be chilled before returning to the normal cooling cycle
- Defrost terminates on coil temperature eliminating excessive defrost period
- Textured aluminum cabinet
- Sweat inlet connection to reduce leaks (flare connection available as a ship loose option)

Model	BTUH 10°F TD @ -	CFM	Motor Info			Heater Data			Coil Inlet / Suction / Drain	Approx. Shipping Wt.
			QTY	115/1/60 Total	208-230/1/60	Watts	115/1/6	208-		
TL09	900	110	1	0.8		475	4.1	2.1	3/8" OD / 3/8" ID / 1/2" OD	14
TL12	1,200	210	2	1.6		600	5.2	2.6	3/8" OD / 1/2" ID / 1/2" OD	19
TL16	1,600	210	2	1.6		700	6.1	3.0	3/8" OD / 1/2" ID / 1/2" OD	23
TL21^	2,100	240	1	1.0	0.5	1,100	9.6	4.8	3/8" OD / 1/2" ID / 1/2" OD	24
TL28	2,800	335	3		1.2	1,430		5.7	3/8" OD / 1/2" ID / 1/2" OD	27
TL35^*	3,500	420	2		1.0	1,600		7.0	1/2" OD / 5/8" ID / 1/2" OD	38
TL53^*	5,300	595	3		1.5	1,950		8.5	1/2" OD / 7/8" ID / 1/2" OD	53

^ Models available with EC Motors

* Models 35 and 53 require external equalized expansion valve

UNITS COOLERS

BOHN

MODEL BTO TWIN FLOW REACH-IN UNIT COOLER



Features

- Compact two-way design with medium velocity air flow
- Mounts flush to the ceiling and draws air in through the fan and discharges out both sides
- Air pattern reduces air loss when doors are opened and the medium velocity reduces product drying
- Textured aluminum cabinet
- Stainless steel fasteners
- Molded polycarbonate or powder coated wire fan guards
- Drain pan and fan panel is easily removed for installation and servicing
- Optional coated coil available (Model BTOK) for enhanced protection in corrosive environments
- Coils are constructed of copper tubing with aluminum fins
- Expansion valve can be mounted inside the cabinet
- Internal junction box is provided for electrical connection
- Motors are thermally protected and permanently lubricated
- All models are UL listed for the US and Canada
- UL classified to NSF standards
- Sweat inlet connection to reduce leaks (flare connection available as a ship loose option)

Application

Model BTO is ideal for temperatures of 35°F and higher. Box temperatures are kept more constant throughout and fresh products last longer. Seven sizes are available with BTUH from 900 to 5,500 at 10° TD.

Larger BTO sizes are suitable for large reach-in and small step-in or walk-in coolers.

Nomenclature

BTO	K	09	A	G
Model	**Coil Option**	**Size**	**Electrical Code**	**Vintage**
Twin Flow Unit Cooler	Blank = Standard K = Coated	09-55	A = 115/1/60 B = 208-230/1/60	

Performance & Electrical Data

Model	BTUH 10°F TD	BTUH 15°F TD	Motor Data						Connections (in.)			Approx. Ship Wt. (lbs.)
			CFM	Qty.	115/1/60 Total FLA		208-230/1/60 Total FLA		Coil Inlet OD	Suction ID	Drain OD	
					SP	EC	SP	EC				
BTO(K)09	900	1,350	130	1	0.8	-	0.4	-	1/2	1/2	1/2	12
BTO(K)13	1,300	1,950	240	2	1.6	-	0.8	-	1/2	1/2	1/2	14
BTO(K)18^	1,800	2,700	255	1	1.0	0.4	0.5	0.2	1/2	1/2	1/2	15
BTO(K)25^*	2,500	3,750	460	2	2.0	0.8	1.0	0.4	1/2	1/2	1/2	23
BTO(K)35^*	3,500	5,250	425	2	2.0	0.8	1.0	0.4	1/2	1/2	1/2	24
BTO(K)45^*	4,500	6,750	550	2	2.0	0.8	1.0	0.4	1/2	1/2	5/8	34
BTO(K)55^*	5,500	8,250	730	1	2.1	0.9	1.1	0.5	1/2	1/2	5/8	34

^ Model available with EC motors ** Models 25, 35, 45 and 55 require an external equalized expansion valve*

Model	Dimensions (in.)														
	A	B	C	D	E	F	G	H	J	K	L	M	N	P	R
BTO(K)09	16-1/8	19-1/8	7-9/16	4	2-5/16	9-9/16	2-3/4	4-7/8	4-1/2	8-5/8	2-1/2	2-5/8	4-9/16	10	7/8
BTO(K)13	16-1/8	19-1/8	7-9/16	4	2-5/16	9-9/16	2-3/4	5-3/4	4-1/2	8-5/8	2-1/2	2-5/8	4-9/16	10	7/8
BTO(K)18	16-1/8	19-1/8	7-9/16	4	2-5/16	9-9/16	2-3/4	5-3/4	4-1/2	8-5/8	2-1/2	2-5/8	4-9/16	10	7/8
BTO(K)25	18-1/8	26-1/8	11-1/16	4	2-5/16	13-1/16	2-3/4	6-3/4	5-1/2	12-1/8	3-1/2	2-5/8	8-1/16	10	7/8
BTO(K)35	18-1/8	26-1/8	11-1/16	4	2-5/16	13-1/16	2-3/4	6-3/4	5-1/2	12-1/8	3-1/2	2-5/8	8-1/16	10	7/8
BTO(K)45	21-1/8	29-1/8	8-3/16	7-3/4	3-7/16	10-5/8	3-1/2	9-1/4	8	13-5/8	5-15/16	4-1/4	7-9/16	14	1-3/4
BTO(K)55	21-1/8	29-1/8	8-3/16	7-3/4	3-7/16	10-5/8	3-1/2	8-1/2	8	13-5/8	5-15/16	4-1/4	7-9/16	14	1-3/4

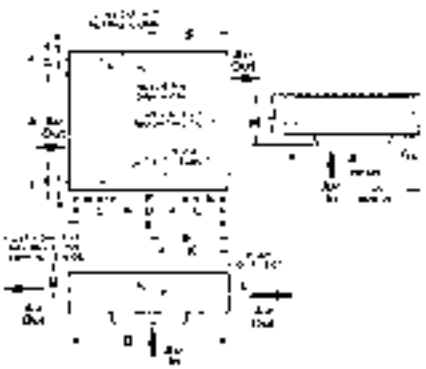

UNITS COOLERS

BOHN

MODEL U DUAL AIRE STANDARD COIL REACH-IN UNIT COOLER



Features

- Textured aluminum cabinet
- Full collar aluminum fins on expanded copper tubes
- Detachable drain pan that is easy to clean
- Molded 3-prong motor connector to save installation time and expense
- Motors are thermally protected and permanently lubricated
- Optional coated coil available (Model UK) for enhanced protection in corrosive environments
- All models are UL recognized for the US and Canada
- UL classified to NSF standards
- Sweat inlet connection to reduce leaks (flare connection available as a ship loose option)

Application

Model U is used wherever a small, compact unit is required. It can be mounted on the ceiling or wall. The model U unit draws air through the front and discharges it out both sides to ensure proper distribution of cool air and thus maintain a uniform box temperature.

Nomenclature

U	K	09	0
Model	**Coil Option**	**Size**	**Electrical Code**
Dual Aire Standard Coil	Blank = Standard K = Coated	09-15	0 = 115/1/60 1 = 208-230/1/60

Performance & Electrical Data

Model	BTUH 10°F TD	BTUH 15°F TD	Motor Data			Connections (in.)			Approx. Ship Wt. (lbs.)
			CFM	115/1/60 Total FLA	208-230/1/60 Total FLA	Coil Inlet FN	Suction ID	Drain OD	
U(K)09	850	1,275	190	0.45	0.55	1/2	3/8	1/2	9
U(K)12	1,150	1,725	250	0.45	0.55	1/2	3/8	1/2	10
U(K)15	1,500	2,250	310	1.10	0.55	1/2	3/8	1/2	14

Physical & Dimensional Data

Model	Dimensions (in.)					
	H	W	D	A	B	C
U(K)09	8-1/2	11-1/2	8-7/8	6	4	3-1/2
U(K)12	8-1/2	17-1/2	8-7/8	12	4	9-1/2
U(K)15	9-1/2	17-1/2	10-7/8	12	4	9-1/2

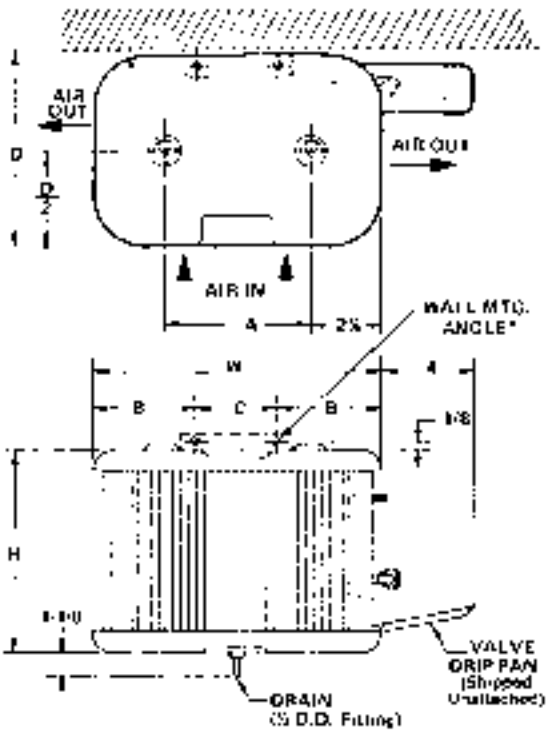

UNITS COOLERS

BOHN

LOW PROFILE UNIT COOLERS | Air Defrost- 60 Hz

PRODUCT IDENTIFIER
E = Evaporator

NOMINAL CAPACITY
x100 = BTU/h

REFRIGERANT DESIGNATOR
S = Standard Refrigerants (R-404A, R-448A/ R-449A, R-407A/ R-407F, R-407C)
G = Glycol
C = CO_2 DX

DEFROST STYLE
A = Air Defrost
E = Electric Defrost
H = Hot Gas Defrost

DESIGN REVISION

B	E	L	0095	A	S	6	A	M	A	B0000

BRAND
B = Bohn

EVAPORATOR STYLE
L = Low Profile

ELECTRICAL CODE
A = 115/1/60
B = 208-230/1/60
C = 208-230/3/60
M = 460/1/60
Q = 220/1/50

FINS PER INCH (fpi)

MOTOR TYPE
M = 2-Speed EC
E = Single Speed EC
C = PSC Totally Enclosed

FACTORY-INSTALLED OPTION PACKAGES
B#### = Preferred Option Packages
D#### = A la Carte Options
Y#### = Custom Option Packages

Capacity Correction Factors

Electric and Hot Gas Defrost Units				
Saturated Suction Temperature °F	20	-10	-20	-30
Saturated Suction Temperature °C	-7	-23	-29	-34
Multiply Capacity By	1.15	1.04	1	0.9

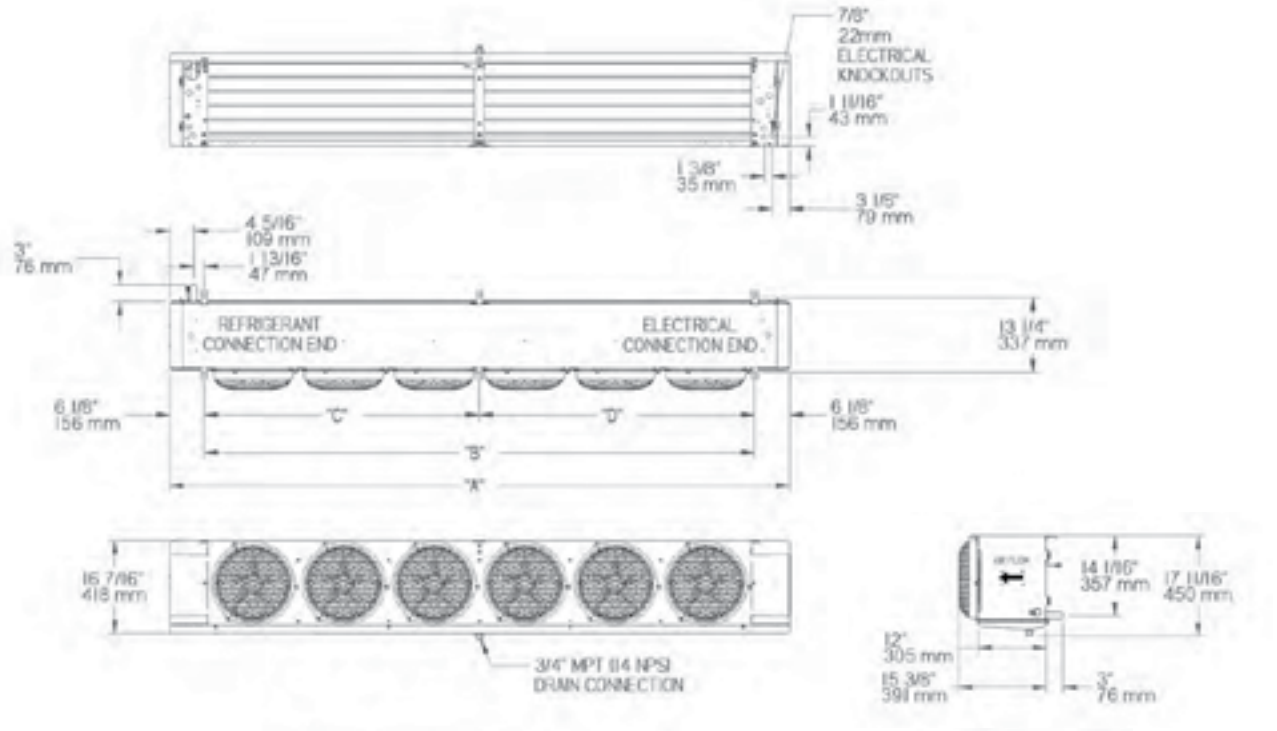

UNITS COOLERS

BOHN

LOW PROFILE UNIT COOLERS | Air Defrost- 60 Hz

PERFORMANCE DATA

PHYSICAL DATA

		R-404A/R-507A		R407A/F/C, R448A/R-449A											
		10°F TD/25°F SST (6°C TD/-4°C SST)				Fan Data								Approx. Net Weight	
New Model	Legacy Model	BTUH	Watts	BTUH	Watts	No. of Fans	CFM	m·H	FPI	Coil Inlet OD	Suction OD	Equalizer OD	Drain MPT	Lbs.	Kg
BEL0045*S6A^A	ADT040	4,000	1,200	4,600	1,300	1	653	1,109	6	1/2	1/2	1/4	3/4	33	15
BEL0055*S6A^A	ADT052	5,200	1,500	6,100	1,800	1	610	1,036	6	1/2	5/8	1/4	3/4	36	16
BEL0060*S6A^A	ADT065 ADT070	6,500	1,900	7,800	2,300	1	610	1,036	6	1/2	5/8	1/4	3/4	36	16
BEL0095*S6A^A	ADT070, ADT090	8,000	2,300	10,000	2,900	2	1,305	2,217	6	1/2	5/8	1/4	3/4	51	23
BEL0105*S6A^A	ADT090 ADT104	9,200	2,650	12,500	3,600	2	1,305	2,217	6	1/2	5/8	1/4	3/4	52	24
BEL0115*S6A^A	ADT120	11,700	3,370	14,500	4,180	2	1,220	2,073	6	1/2	7/8	1/4	3/4	56	26
BEL0125*S6A^A	ADT130	13,000	3,800	15,500	4,500	2	1,220	2,073	6	1/2	7/8	1/4	3/4	56	26
BEL0155*S6A^A	ADT140	14,000	4,100	16,800	4,900	3	1,958	3,327	6	1/2	7/8	1/4	3/4	67	30
BEL0190*S6A^A	ADT156, ADT180	18,000	5,300	21,200	6,200	3	1,830	3,109	6	1/2	7/8	1/4	3/4	73	33
BEL0250*S6A^A	ADT208	20,800	6,100	24,600	7,200	4	2,440	4,146	6	1/2	7/8	1/4	3/4	94	43
BEL0295*S6A^A	ADT260	26,000	7,600	30,700	9,000	5	3,050	5,182	6	1/2	7/8	1/4	3/4	115	52
BEL0350*S6A^A	ADT312	31,200	9,100	36,800	10,800	6	3,660	6,218	6	1/2	1-1/8	1/4	3/4	133	60
BEL0380*S6A^A	ADT370	37,000	10,800	44,400	13,000	6	3,660	6,218	6	1/2	1-1/8	1/4	3/4	137	62

Notes:

' = Capacities shown are Application Capacities reflecting nominal operation at 10°F TD. For models within the scope of the DOE AWEF (Annual Walk-in Energy Factor) standard, the Net Capacity is determined by the AHRI 1250 test method. DOE will publish this compliance data at www.regulations.doe.gov

*** = Electrical Code Designator (see Nomenclature details)**

		PSC Motor (Totally Enclosed)						2-Speed EC Motor (Totally Enclosed)				1-Speed EC Motor (Totally Enclosed)			
		115/1/60		208-230/1/60		460/1/60		115/1/60		208-230/1/60		115/1/60		208-230/1/60	
New Model	HP	Amps	Watts	Amps	Watts	Amps	Watts	Amps	Watts	Amps	Watts	Amps	Watts	Amps	Watts
BEL0045*S6A^A	1/20	1	82	0.5	91	0.4	117	0.9	55	0.5	55	0.9	55	0.5	59
BEL0055*S6A^A	1/20	1	82	0.5	91	0.4	117	0.9	55	0.5	55	0.9	55	0.5	59
BEL0060*S6A^A	1/20	1	82	0.5	91	0.4	117	0.9	55	0.5	55	0.9	55	0.5	59
BEL0095*S6A^A	1/20	2	164	1	182	0.8	234	1.8	110	1	110	1.8	110	1	118
BEL0105*S6A^A	1/20	2	164	1	182	0.8	234	1.8	110	1	110	1.8	110	1	118
BEL0115*S6A^A	1/20	2	164	1	182	0.8	234	1.8	110	1	110	1.8	110	1	118
BEL0125*S6A^A	1/20	2	164	1	182	0.8	234	1.8	110	1	110	1.8	110	1	118
BEL0155*S6A^A	1/20	3	246	1.5	273	1.2	351	2.7	165	1.5	165	2.7	165	1.5	177
BEL0190*S6A^A	1/20	3	246	1.5	273	1.2	351	2.7	165	1.5	165	2.7	165	1.5	177
BEL0250*S6A^A	1/20	4	328	2	364	1.6	468	3.6	220	2	220	3.6	220	2	236
BEL0295*S6A^A	1/20	5	410	2.5	455	2	585	4.5	275	2.5	275	4.5	275	2.5	295
BEL0350*S6A^A	1/20	6	492	3	546	2.4	702	5.4	330	3	330	5.4	330	3	354
BEL0380*S6A^A	1/20	6	492	3	546	2.4	702	5.4	330	3	330	5.4	330	3	354

Notes:

*** = Electrical Code Designator (see Nomenclature details)**

^ = Motor Code Designator (see Nomenclature details)

AWEF

	Cooler			
Model	R-404A/ R-507A	R-448A/ R-449A	R-407A/ R-407F	R-407C
BEL0045*S6AMA	9	9	9	9
BEL0055*S6AMA	9	9	9	9
BEL0060*S6AMA	9	9	9	9
BEL0095*S6AMA	9	9	9	9
BEL0105*S6AMA	9	9	9	9
BEL0115*S6AMA	9	9	9	9
BEL0125*S6AMA	9	9	9	9
BEL0155*S6AMA	9	9	9	9
BEL0190*S6AMA	9	9	9	9
BEL0250*S6AMA	9	9	9	9
BEL0295*S6AMA	9	9	9	9
BEL0350*S6AMA	9	9	9	9
BEL0380*S6AMA	9	9	9	9

DIMENSIONS

No. of Fans	A		B		C		D	
	in.	mm	in.	mm	in.	mm	in.	mm
1	29.5	749	17.25	438	-	-	-	-
2	45.5	1,156	33.25	845	-	-	-	-
3	61.5	1,562	49.25	1,251	-	-	-	-
4	77.5	1,969	65.25	1,657	-	-	-	-
5	93.5	2,375	81.25	2,064	48.63	1,235	32.63	829
6	109.5	2,781	97.25	2,470	48.63	1,235	48.63	1,235

Note:

Hanger brackets will accept 3/8" / 9.5 mm hanger rods

The capacities of the units are listed at sea level. The BTU valve needs to be adjusted at the elevation of the installation

UNITS COOLERS

BOHN

LOW PROFILE UNIT COOLERS | Electric Defrost- 60 Hz

PERFORMANCE DATA

PHYSICAL DATA

		R-404A/R-507A		R-407A/F, R-448A/R-449A											
		10°F TD/-20°F SST (6°C TD/-29°C SST)				Fan Data								Approx. Net Weight	
New Model	Legacy Model	BTUH	Watts	BTUH	Watts	No. of Fans	CFM	m3H	FPI	Coil Inlet OD	Suction OD	Equalizer OD	Drain MPT	Lbs.	Kg
BEL0040*S6E^A	LET035 LET040	3,500	1,000	3,900	1,000	1	685	1,164	6	1/2	5/8	1/4	3/4	36	16
BEL0045*S6E^A	LET040 LET047	4,700	1,400	5,300	1,600	1	641	1,088	6	1/2	5/8	1/4	3/4	38	17
BEL0065*S6E^A	LET065	6,500	1,900	7,200	2,100	2	1,371	2,329	6	1/2	5/8	1/4	3/4	54	24
BEL0080*S6E^A	LET075	7,500	2,200	8,400	2,500	2	1,371	2,329	6	1/2	5/8	1/4	3/4	54	24
BEL0100*S6E^A	LET090	9,000	2,600	9,900	2,900	2	1,281	2,176	6	1/2	7/8	1/4	3/4	59	27
BEL0130*S6E^A	LET120	12,000	3,500	13,500	4,000	3	2,056	3,493	6	1/2	7/8	1/4	3/4	71	32
BEL0155*S6E^A	LET140	14,000	4,100	16,000	4,700	3	1,922	3,265	6	1/2	1-1/8	1/4	3/4	78	35
BEL0170*S6E^A	LET160	16,000	4,700	17,900	5,200	4	2,741	4,658	6	1/2	7/8	1/4	3/4	91	41
BEL0205*S6E^A	LET180	18,000	5,300	20,100	5,900	4	2,562	4,353	6	1/2	1-1/8	1/4	3/4	100	45
BEL0240*S6E^A	LET200	20,000	5,900	22,800	6,600	5	3,203	5,441	6	1/2	1-1/8	1/4	3/4	120	54
BEL0255*S6E^A	LET240	24,000	7,000	26,900	7,900	6	4,112	6,986	6	1/2	1-1/8	1/4	3/4	134	61
BEL0310*S6E^A	LET280	28,000	8,200	31,400	9,200	6	3,843	6,529	6	1/2	1-1/8	1/4	3/4	146	66
BEL0045*S4E^A	LLE041	4,100	1,200	4,500	1,300	1	667	1,132	4	1/2	5/8	1/4	3/4	38	17
BEL0070*S4E^A	LLE068	6,800	2,000	7,400	2,200	2	1,425	2,422	4	1/2	5/8	1/4	3/4	53	24
BEL0090*S4E^A	LLE080	8,000	2,300	8,800	2,600	2	1,332	2,263	4	1/2	7/8	1/4	3/4	59	27
BEL0135*S4E^A	LLE102	10,200	3,000	12,800	3,700	3	1,998	3,395	4	1/2	7/8	1/4	3/4	77	35
BEL0180*S4E^A	LLE136	13,600	4,000	17,300	5,000	4	2,664	4,527	4	1/2	1-1/8	1/4	3/4	100	45
BEL0220*S4E^A	LLE170	17,000	5,000	19,500	5,600	5	3,331	5,659	4	1/2	1-1/8	1/4	3/4	119	54
BEL0275*S4E^A	LLE204 LLE235	23,500	6,900	25,900	7,600	6	3,997	6,790	4	1/2	1-1/8	1/4	3/4	142	64

Notes:

' = Capacities shown are Application Capacities reflecting nominal operation at 10°F TD. For models within the scope of the DOE AWEF (Annual Walk-in Energy Factor) standard, the Net Capacity is determined by the AHRI 1250 test method. DOE will publish this compliance data at www.regulations.doe.gov

*** = Electrical Code Designator (see Nomenclature details)**

SPECIFICATIONS

			2-Speed EC Motor (Totally Enclosed)		1-Speed EC Motor (Totally Enclosed)		PSC Motor (Totally Enclosed)		PSC Motor (Totally Enclosed)		Defrost Heaters-230V			Defrost Heaters-460V	
			208-230/1/60		208-230/1/60		208-230/1/60		460/1/60		Watts	230/1/60	230/3/60	Watts	460/1/60
FPI	New Model	HP	Amps	Watts	Amps	Watts	Amps	Watts	Amps	Watts		Total Amps			Total Amps
6	BEL0040*S6E^A	1/20	0.5	55	0.5	59	0.5	91	0.4	117	1,050	4.6	2.8	900	2
6	BEL0045*S6E^A	1/20	0.5	55	0.5	59	0.5	91	0.4	117	1,050	4.6	2.8	900	2
6	BEL0065*S6E^A	1/20	1	110	1	118	1	182	0.8	234	2,100	9.1	5.7	1,800	3.9
6	BEL0080*S6E^A	1/20	1	110	1	118	1	182	0.8	234	2,100	9.1	5.7	1,800	3.9
6	BEL0100*S6E^A	1/20	1	110	1	118	1	182	0.8	234	2,100	9.1	5.7	1,800	3.9
6	BEL0130*S6E^A	1/20	1.5	165	1.5	177	1.5	273	1.2	351	3,150	13.7	8.5	2,700	5.9
6	BEL0155*S6E^A	1/20	1.5	165	1.5	177	1.5	273	1.2	351	3,150	13.7	8.5	2,700	5.9
6	BEL0170*S6E^A	1/20	2	220	2	236	2	364	1.6	468	4,200	18.3	11.4	3,600	7.8
6	BEL0205*S6E^A	1/20	2	220	2	236	2	364	1.6	468	4,200	18.3	11.4	3,600	7.8
6	BEL0240*S6E^A	1/20	2.5	275	2.5	295	2.5	455	2	585	5,250	22.8	14.2	4,500	9.8
6	BEL0255*S6E^A	1/20	3	330	3	354	3	546	2.4	702	6,300	27.4	17.1	5,400	11.7
6	BEL0310*S6E^A	1/20	3	330	3	354	3	546	2.4	702	6,300	27.4	17.1	5,400	11.7
4	BEL0045*S4E^A	1/20	0.5	55	0.5	59	0.5	91	0.4	117	1,050	4.6	2.8	900	2
4	BEL0070*S4E^A	1/20	1	110	1	118	1	182	0.8	234	2,100	9.1	5.7	1,800	3.9
4	BEL0090*S4E^A	1/20	1	110	1	118	1	182	0.8	234	2,100	9.1	5.7	1,800	3.9
4	BEL0135*S4E^A	1/20	1.5	165	1.5	177	1.5	273	1.2	351	3,150	13.7	8.5	2,700	5.9
4	BEL0180*S4E^A	1/20	2	220	2	236	2	364	1.6	468	4,200	18.3	11.4	3,600	7.8
4	BEL0220*S4E^A	1/20	2.5	275	2.5	295	2.5	455	2	585	5,250	22.8	14.2	4,500	9.8
4	BEL0275*S4E^A	1/20	3	330	3	354	3	546	2.4	702	6,300	27.4	17.1	5,400	11.7

Notes:

*** = Electrical Code Designator (see Nomenclature details)**

^ = Motor Code Designator (see Nomenclature details)

AWEF

	Freezer(Single Speed EC Motors)				Cooler(Dual-Rated 2-Speed EC Motors)				Freezer(Dual-Rated 2-Speed EC Motors)			
Model	R-404A/ R-507A	R-448A/ R-449A	R-407A/ R-407F	R-407C	R-404A/ R-507A	R-448A/ R-449A	R-407A/ R-407F	R-407C	R-404A/ R-507A	R-448A/ R-449A	R-407A/ R-407F	R-407C
BEL0040*S6EEA	3.96	3.96	3.96	-	9	9	9	-	3.96	3.96	3.96	-
BEL0045*S6EEA	3.96	3.96	3.96	-	9	9	9	-	3.96	3.96	3.96	-
BEL0065*S6EEA	4	4.03	4.02	-	9	9	9	-	4	4.03	4.02	-
BEL0080*S6EEA	4.03	4.03	4.03	-	9	9	9	-	4	4	4	-
BEL0100*S6EEA	4	4.06	4.06	-	9	9	9	-	4.03	4.03	4.03	-
BEL0130*S6EEA	4.09	4.09	4.09	-	9	9	9	-	4.06	4.06	4.06	-
BEL0155*S6EEA	4.1	4.1	4.1	-	9	9	9	-	4.09	4.09	4.09	-
BEL0170*S6EEA	4.14	4.14	4.14	-	9	9	9	-	4.1	4.1	4.1	-
BEL0205*S6EEA	4.15	4.15	4.15	-	9	9	9	-	4.14	4.14	4.14	-
BEL0240*S6EEA	4.15	4.15	4.15	-	9	9	9	-	4.15	4.15	4.15	-
BEL0255*S6EEA	4.15	4.15	4.15	-	9	9	9	-	4.15	4.15	4.15	-
BEL0310*S6EEA	4.15	4.15	4.15	-	9	9	9	-	4.15	4.15	4.15	-
BEL0045*S4EEA	3.96	3.96	3.96	-	9	9	9	-	3.96	3.96	3.96	-
BEL0070*S4EEA	3.99	3.99	3.99	-	9	9	9	-	3.99	3.99	3.99	-
BEL0090*S4EEA	4.02	4.02	4.02	-	9	9	9	-	4.02	4.02	4.02	-
BEL0135*S4EEA	4.07	4.07	4.07	-	9	9	9	-	4.07	4.07	4.07	-
BEL0180*S4EEA	4.12	4.12	4.12	-	9	9	9	-	4.12	4.12	4.12	-

UNITS COOLERS

BOHN

LOW PROFILE UNIT COOLERS | Hotgas Defrost- 60 Hz

PERFORMANCE DATA

PHYSICAL DATA

		R-404A/R-507A		R-407A/F,R-448A/R-449A										
		10°F TD/-20°F SST (6°C TD/-29°C SST)				Fan Data								
New Model	Legacy Model	BTUH	Watts	BTUH	Watts	No. of Fans	CFM	m_3H	FPI	Coil Inlet OD	Suction OD	Equalizer OD	Drain MPT	Side Port OD	Hot Gas Pan
BEL0040*S6H^A	HGT035 HGT040	3,500	1,000	3,900	1,000	1	685	1,164	6	1/2	5/8	1/4	3/4	1/2	5/8
BEL0045*S6H^A	HGT040 HGT047	4,700	1,400	5,300	1,600	1	641	1,088	6	1/2	5/8	1/4	3/4	1/2	5/8
BEL0065*S6H^A	HGT065	6,500	1,900	7,200	2,100	2	1,371	2,329	6	1/2	5/8	1/4	3/4	1/2	5/8
BEL0080*S6H^A	HGT075	7,500	2,200	8,400	2,500	2	1,371	2,329	6	1/2	5/8	1/4	3/4	1/2	5/8
BEL0100*S6H^A	HGT090	9,000	2,600	9,900	2,900	2	1,281	2,176	6	1/2	7/8	1/4	3/4	1/2	5/8
BEL0130*S6H^A	HGT120	12,000	3,500	13,500	4,000	3	2,056	3,493	6	1/2	7/8	1/4	3/4	1/2	5/8
BEL0155*S6H^A	HGT140	14,000	4,100	16,000	4,700	3	1,922	3,265	6	1/2	1-1/8	1/4	3/4	1/2	5/8
BEL0170*S6H^A	HGT160	16,000	4,700	17,900	5,200	4	2,741	4,658	6	1/2	7/8	1/4	3/4	1/2	5/8
BEL0205*S6H^A	HGT180	18,000	5,300	20,100	5,900	4	2,562	4,353	6	1/2	1-1/8	1/4	3/4	1/2	5/8
BEL0240*S6H^A	HGT200	20,000	5,900	22,800	6,600	5	3,203	5,441	6	1/2	1-1/8	1/4	3/4	1/2	5/8
BEL0255*S6H^A	HGT240	24,000	7,000	26,900	7,900	6	4,112	6,986	6	1/2	1-1/8	1/4	3/4	1/2	5/8
BEL0310*S6H^A	HGT280	28,000	8,200	31,400	9,200	6	3,843	6,529	6	1/2	1-1/8	1/4	3/4	1/2	5/8
BEL0045*S4H^A	HGT041	4,100	1,200	4,500	1,300	1	667	1,132	4	1/2	5/8	1/4	3/4	1/2	5/8
BEL0070*S4H^A	HGT068	6,800	2,000	7,400	2,200	2	1,425	2,422	4	1/2	5/8	1/4	3/4	1/2	5/8
BEL0090*S4H^A	HGT080	8,000	2,300	8,800	2,600	2	1,332	2,263	4	1/2	7/8	1/4	3/4	1/2	5/8
BEL0135*S4H^A	HGT102	10,200	3,000	12,800	3,700	3	1,998	3,395	4	1/2	7/8	1/4	3/4	1/2	5/8
BEL0180*S4H^A	HGT136	13,600	4,000	17,300	5,000	4	2,664	4,527	4	1/2	1-1/8	1/4	3/4	1/2	5/8
BEL0220*S4H^A	HGT170	17,000	5,000	19,500	5,600	5	3,331	5,659	4	1/2	1-1/8	1/4	3/4	1/2	5/8
BEL0275*S4H^A	HGT204 HGT235	23,500	6,900	25,900	7,600	6	3,997	6,790	4	1/2	1-1/8	1/4	3/4	1/2	5/8

Notes:

'= Capacities shown are Application Capacities reflecting nominal operation at 10˚F TD. For models within the scope of the DOE AWEF (Annual Walk-in Energy Factor) standard, the Net Capacity is determined by the AHRI 1250 test method. DOE will publish this compliance data at www.regulations.doe.gov

*** = Electrical Code Designator (see Nomenclature details)**

SPECIFICATIONS

		2-Speed EC Motor (Totally Enclosed)				1-Speed EC Motor (Totally Enclosed)				Drain Pan Heaters			
		115/1/60		208-230/1/60		115/1/60		208-230/1/60		Watts	115/1/60	230/1/60	460/1/60
New Model	HP	Amps	Watts	Amps	Watts	Amps	Watts	Amps	Watts		Total Amps		
BEL0040*S6H^A	1/20	0.9	55	0.5	55	0.9	55	0.5	59	150	1.3	0.7	0.3
BEL0045*S6H^A	1/20	0.9	55	0.5	55	0.9	55	0.5	59	150	1.3	0.7	0.3
BEL0065*S6H^A	1/20	1.8	110	1	110	1.8	110	1	118	300	2.6	1.3	0.7
BEL0080*S6H^A	1/20	1.8	110	1	110	1.8	110	1	118	300	2.6	1.3	0.7
BEL0100*S6H^A	1/20	1.8	110	1	110	1.8	110	1	118	300	2.6	1.3	0.7
BEL0130*S6H^A	1/20	2.7	165	1.4	165	2.7	165	1.5	177	450	3.9	2	1
BEL0155*S6H^A	1/20	2.7	165	1.4	165	2.7	165	1.5	177	450	3.9	2	1
BEL0170*S6H^A	1/20	3.6	220	1.9	220	3.6	220	2	236	600	5.2	2.6	1.3
BEL0205*S6H^A	1/20	3.6	220	1.9	220	3.6	220	2	236	600	5.2	2.6	1.3
BEL0240*S6H^A	1/20	4.5	275	2.4	275	4.5	270	2.5	295	750	6.5	3.3	1.6
BEL0255*S6H^A	1/20	5.4	330	2.9	330	5.4	330	3	354	900	7.8	3.9	2
BEL0310*S6H^A	1/20	5.4	330	2.9	330	5.4	330	3	354	900	7.8	3.9	2
BEL0045*S4H^A	1/20	0.9	55	0.5	55	0.9	55	0.5	59	150	1.3	0.7	0.3
BEL0070*S4H^A	1/20	1.8	110	1	110	1.8	110	1	118	300	2.6	1.3	0.7
BEL0090*S4H^A	1/20	1.8	110	1	110	1.8	110	1	118	300	2.6	1.3	0.7
BEL0135*S4H^A	1/20	2.7	165	1.4	165	2.7	165	1.5	177	450	3.9	2	1
BEL0180*S4H^A	1/20	3.6	220	1.9	220	3.6	220	2	236	600	5.2	2.6	1.3
BEL0220*S4H^A	1/20	4.5	275	2.4	275	4.5	275	2.5	295	750	6.5	3.3	1.6
BEL0275*S4H^A	1/20	5.4	330	2.9	330	5.4	330	3	354	900	7.8	3.9	2

Notes:

*** = Electrical Code Designator (see Nomenclature details)**

^ = Motor Code Designator (see Nomenclature details)

UNITS COOLERS

BOHN

LOW PROFILE UNIT COOLERS | Hotgas Defrost- 60 Hz (cont'd)

		PSC Motor (Totally Enclosed)						Drain Pan Heaters			
		115/1/60		208-230/1/60		460/1/60		Watts	115/1/60	230/1/60	460/1/60
New Model	HP	Amps	Watts	Amps	Watts	Amps	Watts		Total Amps		
BEL0040*S6H^A	1/20	1	82	0.5	91	0.4	117	150	1.3	0.7	0.3
BEL0045*S6H^A	1/20	1	82	0.5	91	0.4	117	150	1.3	0.7	0.3
BEL0065*S6H^A	1/20	2	164	1	182	0.8	234	300	2.6	1.3	0.7
BEL0080*S6H^A	1/20	2	164	1	182	0.8	234	300	2.6	1.3	0.7
BEL0100*S6H^A	1/20	2	164	1	182	0.8	234	300	2.6	1.3	0.7
BEL0130*S6H^A	1/20	3	246	1.5	273	1.2	351	450	3.9	2	1
BEL0155*S6H^A	1/20	3	246	1.5	273	1.2	351	450	3.9	2	1
BEL0170*S6H^A	1/20	4	328	2	364	1.6	468	600	5.2	2.6	1.3
BEL0205*S6H^A	1/20	4	328	2	364	1.6	468	600	5.2	2.6	1.3
BEL0240*S6H^A	1/20	5	410	2.5	455	2	585	750	6.5	3.3	1.6
BEL0255*S6H^A	1/20	6	492	3	546	2.4	702	900	7.8	3.9	2
BEL0310*S6H^A	1/20	6	492	3	546	2.4	702	900	7.8	3.9	2
BEL0045*S4H^A	1/20	1	82	0.5	91	0.4	117	150	1.3	0.7	0.3
BEL0070*S4H^A	1/20	2	164	1	182	0.8	234	300	2.6	1.3	0.7
BEL0090*S4H^A	1/20	2	164	1	182	0.8	234	300	2.6	1.3	0.7
BEL0135*S4H^A	1/20	3	246	1.5	273	1.2	351	450	3.9	2	1
BEL0180*S4H^A	1/20	4	328	2	364	1.6	468	600	5.2	2.6	1.3
BEL0220*S4H^A	1/20	5	410	2.5	455	2	585	750	6.5	3.3	1.6
BEL0275*S4H^A	1/20	6	492	3	546	2.4	702	900	7.8	3.9	2

Notes:

*** = Electrical Code Designator (see Nomenclature details)**

^ = Motor Code Designator (see Nomenclature details)

AWEF

	Freezer(Single Speed EC Motors)				Cooler(Dual-Rated 2-Speed EC Motors)				Freezer(Dual-Rated 2-Speed EC Motors)			
Model	R-404A/ R-507A	R-448A/ R-449A	R-407A/ R-407F	R-407C	R-404A/ R-507A	R-448A/ R-449A	R-407A/ R-407F	R-407C	R-404A/ R-507A	R-448A/ R-449A	R-407A/ R-407F	R-407C
BEL0040*S6HEA	3.96	3.96	3.96	-	9	9	9	-	3.96	3.96	3.96	-
BEL0045*S6HEA	3.96	3.96	3.96	-	9	9	9	-	3.96	3.96	3.96	-
BEL0065*S6HEA	4	4.03	4.02	-	9	9	9	-	4	4.03	4.02	-
BEL0080*S6HEA	4.03	4.03	4.03	-	9	9	9	-	4	4	4	-
BEL0100*S6HEA	4.06	4.06	4.06	-	9	9	9	-	4.03	4.03	4.03	-
BEL0130*S6HEA	4.09	4.09	4.09	-	9	9	9	-	4.06	4.06	4.06	-
BEL0155*S6HEA	4.1	4.1	4.1	-	9	9	9	-	4.09	4.09	4.09	-
BEL0170*S6HEA	4.14	4.14	4.14	-	9	9	9	-	4.1	4.1	4.1	-
BEL0205*S6HEA	4.15	4.15	4.15	-	9	9	9	-	4.14	4.14	4.14	-
BEL0240*S6HEA	4.15	4.15	4.15	-	9	9	9	-	4.15	4.15	4.15	-
BEL0255*S6HEA	4.15	4.15	4.15	-	9	9	9	-	4.15	4.15	4.15	-
BEL0310*S6HEA	4.15	4.15	4.15	-	9	9	9	-	4.15	4.15	4.15	-
BEL0045*S4HEA	3.96	3.96	3.96	-	9	9	9	-	3.96	3.96	3.96	-
BEL0070*S4HEA	3.99	3.99	3.99	-	9	9	9	-	3.99	3.99	3.99	-
BEL0090*S4HEA	4.02	4.02	4.02	-	9	9	9	-	4.02	4.02	4.02	-
BEL0135*S4HEA	4.07	4.07	4.07	-	9	9	9	-	4.07	4.07	4.07	-
BEL0180*S4HEA	4.12	4.12	4.12	-	9	9	9	-	4.12	4.12	4.12	-
BEL0220*S4HEA	4.15	4.15	4.15	-	9	9	9	-	4.15	4.15	4.15	-
BEL0275*S4HEA	4.15	4.15	4.15	-	9	9	9	-	4.15	4.15	4.15	-

Notes:

*** = Electrical Code Designator (see Nomenclature details)**

intelliGen
BY HEATCRAFT REFRIGERATION PRODUCTS

The **intelliGen™ Refrigeration Controller** is a factory-mounted electronic control that delivers reliable operation and system performance. intelliGen helps reduce product spoilage by maintaining better temperature control and provides energy savings through optimizing defrosts.



WE MADE IT SIMPLE TO HELP YOU WIN

Be the leader in your market. Convert end-users from mechanical to electronic control with these benefits!

- Energy Savings
- Improved product integrity
- Increased shelf life
- Operational Savings
- Less disruption to the business

intelliGen
BY HEATCRAFT REFRIGERATION PRODUCTS

START DIFFERENTIATING YOUR BUSINESS TODAY

TRAINING

- Regional trainings
- Online Modules
- Heatcraft facility

CERTIFICATION

- 1 year extended warranty
- Free webpage listing
- Finance support

24/7 SUPPORT

- Round the clock support at (800) 537-7775
- Spare parts shipped next day

SELLING & SUPPORT TOOLS

- Payback calculator
- System selection tool
- Videos
- Collateral



Scan the QR code or visit us at **www.intelliGencontrols.com**

HEATCRAFT Worldwide Refrigeration

BOHN · CHANDLER REFRIGERATION · CLIMATE CONTROL · LARKIN

intelliGencontrols.com

HEATCRAFT Worldwide Refrigeration

SIMPLICITY REFINED

Introducing the New **intelliGen** Refrigeration Controller



THE INTELLIGEN™

Intuitive. Simple. Smart.

Intuitive Design

The user interface design allows the operator to immediately know when and where there is a problem and provides the contractor a user-friendly interface to install and service the unit.

INTEGRATED USER INTERFACE



Light bar with alerts
The light bar with alerts immediately shows the status of your system.

Full text display
Guided text instructions for setup.

Quick menu buttons
Establish preferred settings and quickly make changes.

Turn & press knob
Quickly navigate system configuration & servicing.

Simple Setup

System configuration quickly guides technicians through each step.

- Guided quick setup.
- No wiring between condensing unit and unit cooler, when controlling unit cooler only.
- Components factory mounted, tested, and calibrated.

SETUP IN MINUTES, NOT HOURS



intelliGen Control



Mechanical Components*

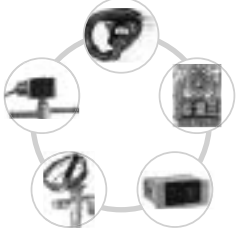

* Factory Mounted Mechanical Components

Smart Servicing

Reduce diagnosis, service and downtime with intuitive user interface.

REMOTE MONITORING CAPABILITY



Field installable optional intelliGen Webserver Card (iWC) enables local and remote monitoring on any phone, tablet or laptop.

- Optional intelliGen Integration Card (iIC) allows connection with Building Management System (BMS)

RECEIVE ALERTS BY



Web BMS Text (SMS) E-mail



- **60 DAYS OF DATA LOGGING**
- **SOFTWARE UPDATES**

EASY MAINTENANCE

Functional design exclusive to unit coolers with factory installed intelliGen:

- Labeled wiring
- Hinged Bracket**
- Removable and color-coded terminals

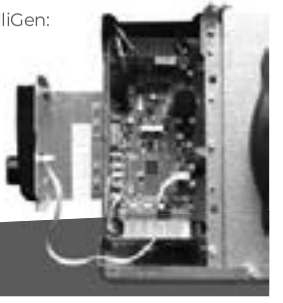

** Low Profile only

UNITS COOLERS

BOHN

CENTER MOUNT EVAPORATOR

BRAND
B = Bohn

EVAPORATOR STYLE
C = Center Mount

VOLTAGE
A = 115/1/60
B = 208-230/1/60

FINS PER INCH
6
7

MOTOR
M = 2 Speed EC

FACTORY INSTALLED OPTION PACKAGES
B#### = Preferred Option Packages
D#### = A la Carte Options
Y#### = Custom Option Packages

B	E	C	0065	B	S	7	A	M	A	B####

PRODUCT IDENTIFIER
E = Evaporator

BTU CAPACITY
0050 = 5,000
0065 = 6,500
0075 = 7,500
0120 = 12,000
0130 = 13,000
0135 = 13,500
0175 = 17,500
0180 = 18,000
0200 = 20,000
0225 = 22,500
0250 = 25,000
0285 = 28,500
0360 = 36,000

APPLICATION
S = Standard Refrigerants

DEFROST
A = Air
E = Electric

REVISION

Capacity Correction Factors

Electric and Hot Gas Defrost Units				
Saturated Suction Temperature °F	20	-10	-20	-30
Saturated Suction Temperature °C	-7	-23	-29	-34
Multiply Capacity By	1.15	1.04	1	0.9

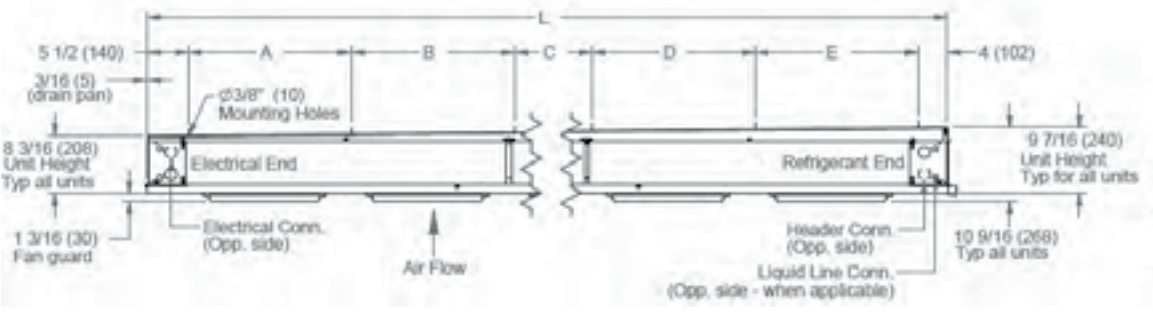

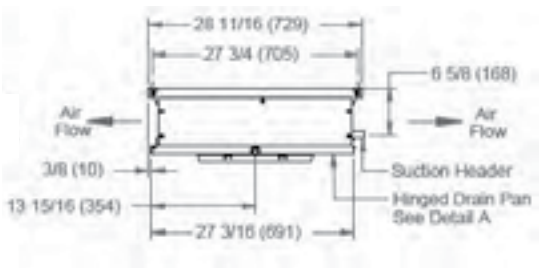

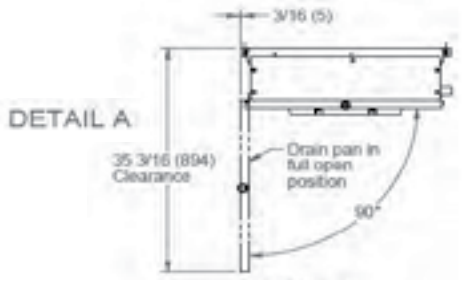

UNITS COOLERS

BOHN

CENTER MOUNT EVAPORATOR

PERFORMANCE DATA

SPECIFICATIONS

		R-404A/R-507A		R-448A/R-449A, R-407A/C/F						2 Speed EC Motor				Defrost Heaters	
		10°F TD/25°F SST (6°C TD/4°C SST)				Fan Data			HP	115/1/60		208-230/1/60			
New Model	Legacy Model	BTUH	Watts	BTUH	Watts	No. of Fans	CFM	m_3H		Amps	Watts	Amps	Watts	Watts	Total Amps
BEC0065*S7AMA	SM052	5,200	1,524	6,400	1,875	1	610	1,036	1/20	0.8	55	0.4	55		
BEC0095*S7AMA	SM076 SM090	7,000	2,051	9,100	2,666	2	1,220	2,073	1/20	1.7	110	0.8	110		
BEC0130*S7AMA	SM102	9,100	2,666	13,000	3,809	2	1,220	2,073	1/20	1.7	110	0.8	110		
BEC0175*S7AMA	SM108	10,800	3,164	17,350	5,084	3	1,830	3,109	1/20	2.5	165	1.3	165		
BEC0200*S7AMA	SM134	13,400	3,926	19,900	5,831	3	1,830	3,109	1/20	2.5	165	1.3	165		
BEC0225*S7AMA	SM156	15,600	4,571	22,300	6,534	3	1,830	3,109	1/20	2.5	165	1.3	165		
BEC0250*S7AMA	SM179	17,900	5,245	24,700	7,237	4	2,440	4,146	1/20	3.4	220	1.7	220		
BEC0285*S7AMA	SM208	20,800	6,094	28,300	8,292	4	2,440	4,146	1/20	3.4	220	1.7	220		
BEC0360*S7AMA	SM249	24,900	7,296	35,750	10,475	5	3,050	5,182	1/20	4.2	275	2.1	275		
BEC0050BS6EMA	SME040	4,000	1,172	5,500	1,612	1	610	1,036	1/20			0.4	55	1,200	5.3
BEC0075BS6EMA	SME054 SME065	6,500	1,905	8,700	2,549	2	1,220	2,073	1/20			0.8	110	2,000	8.7
BEC0120BS6EMA	SME090	9,000	2,637	13,600	3,985	3	1,830	3,109	1/20			1.3	165	2,400	10.5
BEC0135BS6EMA	SME130	13,000	3,809	15,700	4,600	3	1,830	3,109	1/20			1.3	165	3,600	15.7
BEC0180BS6EMA	SME174	17,400	5,098	21,100	6,182	4	2,440	4,146	1/20			1.7	220	4,800	20.9

PHYSICAL DATA

AWEF DATA

						Approx. Net Weight			Cooler				Freezer			
Model	No. of Fans	Coil Inlet OD	Suction OD	Equalizer OD	Drain MPT	Lbs.	Kg	FPI	R-404A/ R-507A	R-448A/ R-449A	R-407A/ R-407F	R-407C	R-404A/ R-507A	R-448A/ R-449A	R-407A/ R-407F	R-407C
BEC0065*S7AMA	1	3/8	1 - 1/8	1/4	3/4	50	23	7	9	9	9	9				
BEC0095*S7AMA	2	3/8	1 - 1/8	1/4	3/4	100	45	7	9	9	9	9				
BEC0130*S7AMA	2	3/8	1 - 1/8	1/4	3/4	100	45	7	9	9	9	9				
BEC0175*S7AMA	3	3/8	1 - 1/8	1/4	3/4	126	57	7	9	9	9	9				
BEC0200*S7AMA	3	3/8	1 - 1/8	1/4	3/4	141	64	7	9	9	9	9				
BEC0225*S7AMA	3	3/8	1 - 1/8	1/4	3/4	148	67	7	9	9	9	9				
BEC0250*S7AMA	4	3/8	1 - 1/8	1/4	3/4	179	81	7	9	9	9	9				
BEC0285*S7AMA	4	3/8	1 - 1/8	1/4	3/4	197	89	7	9	9	9	9				
BEC0360*S7AMA	5	3/8	1 - 1/8	1/4	3/4	248	112	7	9	9	9	9				
BEC0050BS6EMA	1	3/8	1 - 1/8	1/4	3/4	108	49	6	-	9	9	9	3.96	3.99	3.99	3.98
BEC0075BS6EMA	2	3/8	1 - 1/8	1/4	3/4	144	65	6	-	9	9	9	4	4.04	4.04	4.02
BEC0120BS6EMA	3	3/8	1 - 1/8	1/4	3/4	192	87	6	9	9	9	9	4.05	4.12	4.11	4.09
BEC0135BS6EMA	3	3/8	1 - 1/8	1/4	3/4	209	95	6	9	9	9	9	4.07	4.15	4.14	4.12
BEC0180BS6EMA	4	3/8	1 - 1/8	1/4	3/4	262	119	6	9	9	9	9	4.12	4.15	4.15	4.15

Dimensional data of Air Defrost models

Model	No. of Fans	L Inches (mm)	A Inches (mm)	B Inches (mm)	C Inches (mm)	D Inches (mm)	E Inches (mm)
BEC0065*S7AMA	1	31 1/2 (800)	22 (559)	-	-	-	-
BEC0095*S7AMA	2	53 1/2 (1359)	22 (559)	22 (559)	-	-	-
BEC0130*S7AMA	2	53 1/2 (1359)	22 (559)	22 (559)	-	-	-
BEC0175*S7AMA	3	75 1/2 (1918)	22 (559)	22 (559)	22 (559)	-	-
BEC0200*S7AMA	3	75 1/2 (1918)	22 (559)	22 (559)	22 (559)	-	-
BEC0225*S7AMA	3	75 1/2 (1918)	22 (559)	22 (559)	22 (559)	-	-
BEC0250*S7AMA	4	97 1/2 (2477)	22 (559)	22 (559)	22 (559)	22 (559)	-
BEC0285*S7AMA	4	97 1/2 (2477)	22 (559)	22 (559)	22 (559)	22 (559)	-
BEC0360*S7AMA	5	119 1/2 (3035)	22 (559)	22 (559)	22 (559)	22 (559)	22 (559)

Dimensional data of Electric Defrost models

Model	No. of Fans	L Inches (mm)	A Inches (mm)	B Inches (mm)	C Inches (mm)	D Inches (mm)
BEC0050BS6EMA	1	31 1/2 (800)	22 (559)	-	-	-
BEC0075BS6EMA	2	53 1/2 (1359)	22 (559)	22 (559)	-	-
BEC0120BS6EMA	3	75 1/2 (1918)	22 (559)	22 (559)	22 (559)	-
BEC0135BS6EMA	3	75 1/2 (1918)	22 (559)	22 (559)	22 (559)	-
BEC0180BS6EMA	4	97 1/2 (1918)	22 (559)	22 (559)	22 (559)	22 (559)

Notes:
Capacities shown are Application Capacities reflecting nominal operation at 10°F TD. For models within the scope of the DOE AWEF (Annual Walk-in Energy Factor) standard, the Net Capacity is determined by the AHRI 1250 test method. DOE will publish this compliance data at www.regulations.doe.gov
* = Electrical Code Designator (see Nomenclature details)
All connections are in "

UNITS COOLERS

BOHN

LOW VELOCITY CENTER MOUNT EVAPORATOR | Air Defrost- 60 Hz

BRAND
B = Bohn

EVAPORATOR STYLE
V = Low Velocity Center Mount

VOLTAGE
A = 115/1/60
B = 208-230/1/60

FINS PER INCH
6

MOTOR
M = 2 Speed EC

FACTORY INSTALLED OPTION PACKAGES
B#### = Preferred Option Packages
D#### = A la Carte Options
Y#### = Custom Option Packages

B	E	V	0080	B	S	6	A	M	A	B####

PRODUCT IDENTIFIER
E = Evaporator

BTU CAPACITY
0080 = 8,050
0125 = 12,150
0160 = 15,950
0180 = 17,850
0215 = 21,450
0245 = 24,300
0290 = 28,550
0360 = 35,750

APPLICATION
S = Standard Refrigerants
C = CO_2 DX

DEFROST
A = Air
E = Electric
H = Hot Gas

REVISION

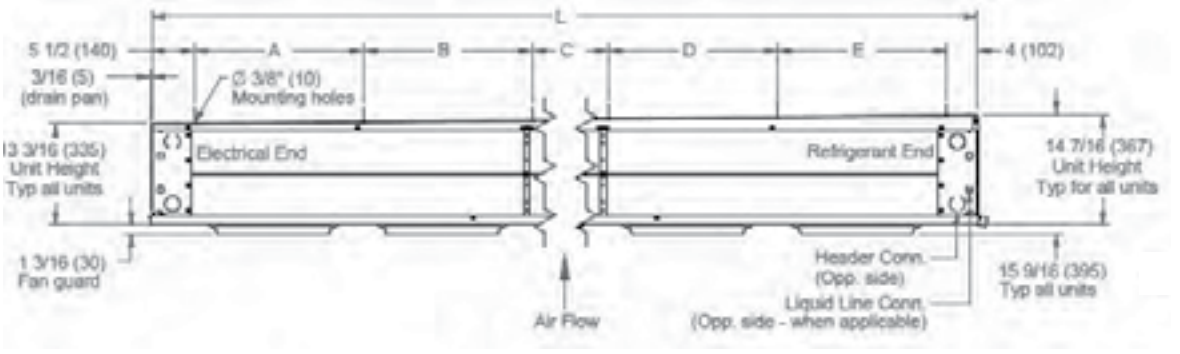

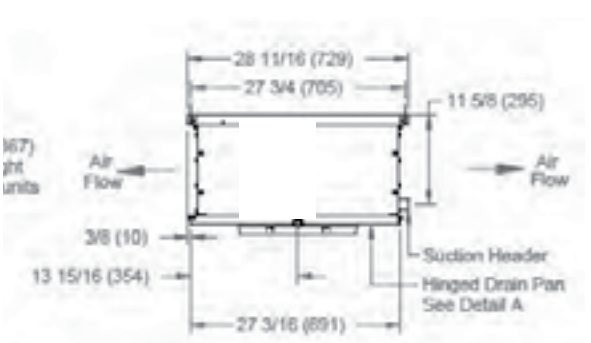

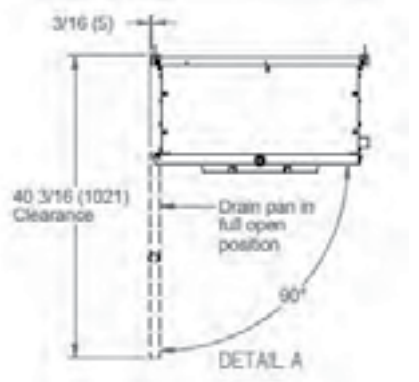

UNITS COOLERS

BOHN

LOW VELOCITY CENTER MOUNT EVAPORATOR | Air Defrost- 60 Hz

PERFORMANCE DATA

SPECIFICATIONS

New Model	Legacy Model	R-404A/R-507A 10°F TD/25°F SST (6°C TD/4°C SST) BTUH	R-404A/R-507A 10°F TD/25°F SST (6°C TD/4°C SST) Watts	R-448A/R-449A, R-407A/C/F 10°F TD/25°F SST (6°C TD/4°C SST) BTUH	R-448A/R-449A, R-407A/C/F 10°F TD/25°F SST (6°C TD/4°C SST) Watts	Fan Data No. of Fans	Fan Data CFM	Fan Data m^3H	HP	2 Speed EC Motor 115/1/60 Amps	115/1/60 Watts	115/1/60 MCA	115/1/60 MOPD	208-230/1/60 Amps	208-230/1/60 Watts	208-230/1/60 MCA	208-230/1/60 MOPD
BEV0055*S6AMA	WK050	5,000	1,465	5,500	1,612	1	725	1,232	1/20	0.8	55	1.1	20	0.4	55	0.6	15
BEV0080*S6AMA	WK075	7,500	2,198	8,400	2,461	1	725	1,232	1/20	0.8	55	1.1	20	0.4	55	0.6	15
BEV0125*S6AMA	WK100	10,000	2,930	11,600	3,399	2	1,450	2,464	1/20	1.7	110	2	20	0.8	110	1.1	15
BEV0160*S6AMA	WK130	13,000	3,809	14,300	4,190	2	1,450	2,464	1/20	1.7	110	2	20	0.8	110	1.1	15
BEV0180*S6AMA	WK155‡	15,500	4,542	17,360	5,086	3	2,175	3,695	1/20	2.5	165	2.9	20	1.3	165	1.6	15
BEV0215*S6AMA	WK180	18,000	5,274	20,880	6,118	3	2,175	3,695	1/20	2.5	165	2.9	20	1.3	165	1.6	15
BEV0245*S6AMA	WK210	21,000	6,153	23,940	7,014	4	2,900	4,927	1/20	3.4	220	3.8	20	1.7	220	2.1	15
BEV0290*S6AMA	WK270	27,000	7,911	31,860	9,335	4	2,900	4,927	1/20	3.4	220	3.8	20	1.7	220	2.1	15
BEV0360*S6AMA	WK340	34,000	9,962	40,120	11,755	5	3,625	6,159	1/20	4.2	275	4.7	20	2.1	275	2.6	15

Notes:
Capacities shown are Application Capacities reflecting nominal operation at 10°F TD. For models within the scope of the DOE AWEF (Annual Walk-in Energy Factor) standard, the Net Capacity is determined by the AHRI 1250 test method. DOE will publish this compliance data at www.regulations.doe.gov
* = Electrical Code Designator (see Nomenclature details)
‡ = Number of fans increases from 2 in legacy to 3 in new model Net Capacity is available upon request

PHYSICAL DATA

AWEF DATA

Model	No. of Fans	Coil Inlet OD	Suction OD	Equalizer OD	Drain MPT	Approx. Net Weight Lbs.	Approx. Net Weight Kg	FPI	Cooler R-404A/ R-507A	Cooler R-448A/ R-449A	Cooler R-407A/ R-407F	Cooler R-407C
BEV0055*S6AMA	1	3/8	1 - 3/8	1/4	3/4	84	38	6	9	9	9	9
BEV0080*S6AMA	1	3/8	1 - 3/8	1/4	3/4	84	38	6	9	9	9	9
BEV0125*S6AMA	2	3/8	1 - 3/8	1/4	3/4	117	53	6	9	9	9	9
BEV0160*S6AMA	2	3/8	1 - 3/8	1/4	3/4	164	74	6	9	9	9	9
BEV0180*S6AMA	3	3/8	1 - 3/8	1/4	3/4	179	81	6	9	9	9	9
BEV0215*S6AMA	3	3/8	1 - 3/8	1/4	3/4	192	87	6	9	9	9	9
BEV0245*S6AMA	4	3/8	1 - 3/8	1/4	3/4	232	105	6	9	9	9	9
BEV0290*S6AMA	4	3/8	1 - 3/8	1/4	3/4	240	109	6	9	9	9	9
BEV0360*S6AMA	5	3/8	1 - 3/8	1/4	3/4	291	132	6	9	9	9	9

Notes:
* = Electrical Code Designator (see Nomenclature details)
All connections are in "

DIMENSIONAL DATA

Air Defrost

Model	No. of Fans	L Inches (mm)	A Inches (mm)	B Inches (mm)	C Inches (mm)	D Inches (mm)	E Inches (mm)
BEV0055*S6AMA	1	31 1/2 (800)	22 (559)	-	-	-	-
BEV0080*S6AMA	1	31 1/2 (800)	22 (559)	-	-	-	-
BEV0125*S6AMA	2	53 1/2 (1359)	22 (559)	22 (559)	-	-	-
BEV0160*S6AMA	2	53 1/2 (1359)	22 (559)	22 (559)	-	-	-
BEV0180*S6AMA	3	75 1/2 (1918)	22 (559)	22 (559)	22 (559)	-	-
BEV0215*S6AMA	3	75 1/2 (1918)	22 (559)	22 (559)	22 (559)	-	-
BEV0245*S6AMA	4	97 1/2 (2477)	22 (559)	22 (559)	22 (559)	22 (559)	-
BEV0290*S6AMA	4	97 1/2 (2477)	22 (559)	22 (559)	22 (559)	22 (559)	-
BEV0360*S6AMA	5	119 1/2 (3035)	22 (559)	22 (559)	22 (559)	22 (559)	22 (559)

UNITS COOLERS

BOHN

LOW VELOCITY CENTER MOUNT EVAPORATOR

Medium Temperature Electric & Hot Gas Defrost- 60 Hz

PERFORMANCE DATA

SPECIFICATIONS

		R-404A/R-507A		R-448A/R-449A, R-407A/C/F						2 Speed EC Motor				Defrost Heaters		Drain Pan Heaters		
		10°F TD/25°F SST (6°C TD/4°C SST)				Fan Data			HP	115/1/60		208-230/1/60				Watts	115/1/60	208-230/1/60
New Model	Legacy Model	BTUH	Watts	BTUH	Watts	No. of Fans	CFM	m³H		Amps	Watts	Amps	Watts	Watts	Total Amps		Total Amps	Total Amps
BEV0055BS6EMA	WKE050	5,000	1,465	5,500	1,612	1	725	1,232	1/20			0.4	55	1,600	7			
BEV0080BS6EMA	WKE075	7,500	2,198	8,400	2,461	1	725	1,232	1/20			0.4	55	1,600	7			
BEV0125BS6EMA	WKE100	10,000	2,930	11,600	3,399	2	1,450	2,464	1/20			0.8	55	2,800	12.2			
BEV0160BS6EMA	WKE130	13,000	3,809	14,300	4,190	2	1,450	2,464	1/20			0.8	110	2,800	12.2			
BEV0180BS6EMA	WKE155‡	15,500	4,542	17,360	5,086	3	2,175	3,695	1/20			1.3	110	4,000	17			
BEV0215BS6EMA	WKE180	18,000	5,274	20,880	6,118	3	2,175	3,695	1/20			1.3	165	4,000	17.4			
BEV0245BS6EMA	WKE210	21,000	6,153	23,940	7,014	4	2,900	4,927	1/20			1.7	165	5,200	22.6			
BEV0290BS6EMA	WKE270	27,000	7,911	31,860	9,335	4	2,900	4,927	1/20			1.7	220	5,200	22.6			
BEV0360BS6EMA	WKE340	34,000	9,962	40,120	11,755	5	3,625	6,159	1/20			2.1	220	7,000	30.4			
BEV0080*S6HMA	NA	7,500	2,198	8,400	2,461	1	725	1,232	1/20	0.8	55	0.4	55			200	1.7	0.9
BEV0125*S6HMA	WKG100	10,000	2,930	11,600	3,399	2	1,450	2,464	1/20	1.7	110	0.8	110			350	3	1.5
BEV0160*S6HMA	WKG130	13,000	3,809	14,300	4,190	2	1,450	2,464	1/20	1.7	110	0.8	110			350	3	1.5
BEV0180*S6HMA	WKG155‡	15,500	4,542	17,360	5,086	3	2,175	3,695	1/20	2.5	165	1.3	165			500	4	2.2
BEV0215*S6HMA	WKG180	18,000	5,274	20,880	6,118	3	2,175	3,695	1/20	2.5	165	1.3	165			500	4	2.2
BEV0245*S6HMA	WKG210	21,000	6,153	23,940	7,014	4	2,900	4,927	1/20	3.4	220	1.7	220			650	6	2.8
BEV0290*S6HMA	WKG270	27,000	7,911	31,860	9,335	4	2,900	4,927	1/20	3.4	220	1.7	220			650	6	2.8
BEV0360*S6HMA	WKG340	34,000	9,962	40,120	11,755	5	3,625	6,159	1/20	4.2	275	2.1	275			875	8	3.8

Notes:

Capacities shown are Application Capacities reflecting nominal operation at 10°F TD. For models within the scope of the DOE AWEF (Annual Walk-in Energy Factor) standard, the Net Capacity is determined by the AHRI 1250 test method. DOE will publish this compliance data at www.regulations.doe.gov

* = Electrical Code Designator (see Nomenclature details)

‡ = Number of fans increases from 2 in legacy to 3 in new model Net Capacity is available upon request

PHYSICAL DATA

Model	No. of Fans	Coil Inlet OD	Suction OD	Equalizer OD	Drain MPT	Side Port OD	Approx. Net Weight Lbs.	Approx. Net Weight Kg	FPI
BEV0055BS6EMA	1	3/8	1 - 3/8	1/4	3/4		90	41	6
BEV0080BS6EMA	1	3/8	1 - 3/8	1/4	3/4		90	41	6
BEV0125BS6EMA	2	3/8	1 - 3/8	1/4	3/4		124	56	6
BEV0160BS6EMA	2	3/8	1 - 3/8	1/4	3/4		180	82	6
BEV0180BS6EMA	3	3/8	1 - 3/8	1/4	3/4		185	84	6
BEV0215BS6EMA	3	3/8	1 - 3/8	1/4	3/4		189	86	6
BEV0245BS6EMA	4	3/8	1 - 3/8	1/4	3/4		244	111	6
BEV0290BS6EMA	4	3/8	1 - 3/8	1/4	3/4		250	113	6
BEV0360BS6EMA	5	3/8	1 - 3/8	1/4	3/4		300	136	6
BEV0080*S6HMA	1	3/8	1 - 3/8	1/4	3/4	0.5	90	41	6
BEV0125*S6HMA	2	3/8	1 - 3/8	1/4	3/4	0.5	148	67	6
BEV0160*S6HMA	2	3/8	1 - 3/8	1/4	3/4	0.625	176	80	6
BEV0180*S6HMA	3	3/8	1 - 3/8	1/4	3/4	0.625	209	95	6
BEV0215*S6HMA	3	3/8	1 - 3/8	1/4	3/4	0.625	222	101	6
BEV0245*S6HMA	4	3/8	1 - 3/8	1/4	3/4	0.625	268	122	6
BEV0290*S6HMA	4	3/8	1 - 3/8	1/4	3/4	0.625	274	124	6
BEV0360*S6HMA	5	3/8	1 - 3/8	1/4	3/4	0.875	324	147	6

AWEF DATA

Model	Cooler R-404A/ R-507A	Cooler R-448A/ R-449A	Cooler R-407A/ R-407F	Cooler R-407C
BEV0055BS6EMA	9	9	9	9
BEV0080BS6EMA	9	9	9	9
BEV0125BS6EMA	9	9	9	9
BEV0160BS6EMA	9	9	9	9
BEV0180BS6EMA	9	9	9	9
BEV0215BS6EMA	9	9	9	9
BEV0245BS6EMA	9	9	9	9
BEV0290BS6EMA	9	9	9	9
BEV0360BS6EMA	9	9	9	9
BEV0080*S6HMA	9	9	9	9
BEV0125*S6HMA	9	9	9	9
BEV0160*S6HMA	9	9	9	9
BEV0180*S6HMA	9	9	9	9
BEV0215*S6HMA	9	9	9	9
BEV0245*S6HMA	9	9	9	9
BEV0290*S6HMA	9	9	9	9
BEV0360*S6HMA	9	9	9	9

HOT GAS REVERSE CYCLE KITS

Models Used On	TXV Bypass Kits: TXV Type	TXV Bypass Kits: Bypass Kit Assy
BEV0125	EG, EGSE	50747611
BEV0125	SBF	50747612
BEV0125	SQE	50747613
BEV0125	BBI	50747614
BEV0160 to BEV0290	SBF, SQE	50747511
BEV0160 to BEV0290	BBI	50747512
BEV0160 to BEV0290	EG,EGSE	50747513
BEV0160 to BEV0245	EGSE-1-ZP, EGSE-2-ZP	50747515
BEV0360	SBF, SQE	50747311
BEV0360	BBI	50747312
BEV0360	EG	50747313
BEV0290	EBF	50747411

Notes:

* = Electrical Code Designator (see Nomenclature details)

All connections are in "

DIMENSIONAL DATA

Electric Defrost

Model	No. of Fans	L Inches (mm)	A Inches (mm)	B Inches (mm)	C Inches (mm)	D Inches (mm)	E Inches (mm)
BEV0055BS6EMA	1	31 1/2 (800)	22 (559)	-	-	-	-
BEV0080BS6EMA	1	31 1/2 (800)	22 (559)	-	-	-	-
BEV0125BS6EMA	2	53 1/2 (1359)	22 (559)	22 (559)	-	-	-
BEV0160BS6EMA	2	53 1/2 (1359)	22 (559)	22 (559)	-	-	-
BEV0180BS6EMA	3	75 1/2 (1918)	22 (559)	22 (559)	22 (559)	-	-
BEV0215BS6EMA	3	75 1/2 (1918)	22 (559)	22 (559)	22 (559)	-	-
BEV0245BS6EMA	4	97 1/2 (2477)	22 (559)	22 (559)	22 (559)	22 (559)	-
BEV0290BS6EMA	4	97 1/2 (2477)	22 (559)	22 (559)	22 (559)	22 (559)	-
BEV0360BS6EMA	5	119 1/2 (3035)	22 (559)	22 (559)	22 (559)	22 (559)	22 (559)

Hot Gas Defrost

Model	No. of Fans	L Inches (mm)	A Inches (mm)	B Inches (mm)	C Inches (mm)	D Inches (mm)	E Inches (mm)
BEV0080*S6HMA	1	31 1/2 (800)	22 (559)	-	-	-	-
BEV0125*S6HMA	2	53 1/2 (1359)	22 (559)	22 (559)	-	-	-
BEV0160*S6HMA	2	53 1/2 (1359)	22 (559)	22 (559)	-	-	-
BEV0180*S6HMA	3	53 1/2 (1359)	22 (559)	22 (559)	-	-	-
BEV0215*S6HMA	3	75 1/2 (1918)	22 (559)	22 (559)	22 (559)	-	-
BEV0245*S6HMA	4	75 1/2 (1918)	22 (559)	22 (559)	22 (559)	22 (559)	-
BEV0290*S6HMA	4	97 1/2 (2477)	22 (559)	22 (559)	22 (559)	22 (559)	-
BEV0360*S6HMA	5	97 1/2 (2477)	22 (559)	22 (559)	22 (559)	22 (559)	22 (559)

UNITS COOLERS

BOHN

MEDIUM PROFILE EVAPORATOR

PRODUCT IDENTIFIER	NOMINAL CAPACITY	APPLICATION	DEFROST	REVISION						
E = Evaporator	**x100** = BTU/h	**S** = Standard Refrigerants **C** = CO_2 DX	**A** = Air **E** = Electric **H** = Hot Gas							
B	**E**	**M**	**0185**	**A**	**S**	**8**	**A**	**M**	**B**	**B0000**
BRAND **B** = Bohn	**EVAPORATOR STYLE** **M** = Medium Profile	**VOLTAGE** **A** = 115/1/60 **B** = 208–230/1/60 **C** = 208–230/3/60 **M** = 460/1/60 **D** = 460/3/60 **E** = 575/3/60 **L** = 575/1/60		**FINS PER INCH (fpi)** **4** **6** **8**		**MOTOR** **M** = 2 Speed EC **E** = Fixed Speed EC **C** = PSC Totally Enclosed **V** = Variable Speed EC **P** = PSC		**FACTORY–INSTALLED OPTION PACKAGES** **B####** = Preferred Option Packages **D####** = A la Carte Options **Y####** = Custom Option Packages		

Capacity Correction Factors

Electric and Hot Gas Defrost Units				
Saturated Suction Temperature °F	20	-10	-20	-30
Saturated Suction Temperature °C	-7	-23	-29	-34
Multiply Capacity By	1.15	1.04	1	0.9

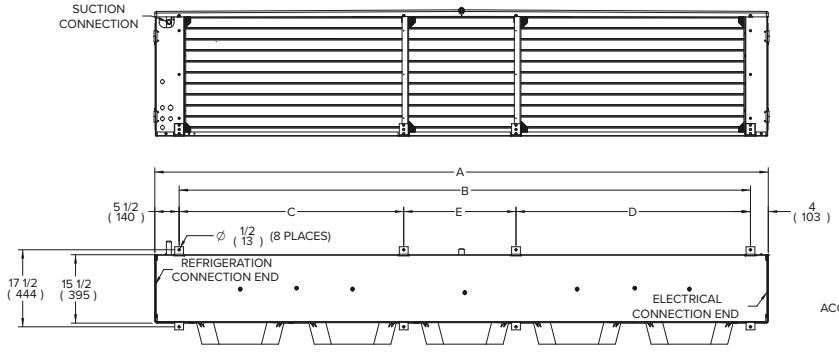

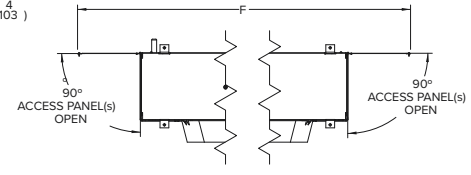

HINGED & REMOVABLE ACCESS PANEL(s)

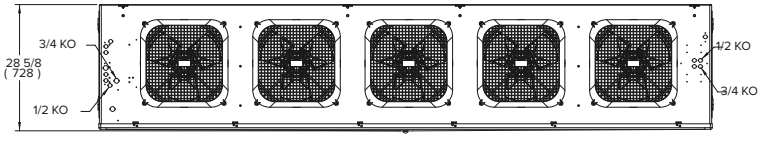

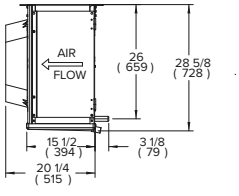

UNITS COOLERS

BOHN

MEDIUM PROFILE EVAPORATOR

PERFORMANCE DATA

		R-404A/R-507A		R-448A/R-449A		R-407A/R-407F		R-407C										
		Application Capacity[1]								Fan Data			Air Throw					
		10°F TD/ 25°F SST	6°C TD/- 4°C SST	10°F TD/ 25°F SST	6°C TD/- 4°C SST	10°F TD/ 25°F SST	6°C TD/- 4°C SST	10°F TD/ 25°F SST	6°C TD/- 4°C SST				Diameter		Standard (Molded Fan Guard)		Diffused (Wire Fan Guard)	
New Model	Legacy Model	BTUH	Watts	BTUH	Watts	BTUH	Watts	BTUH	Watts	No. of Fans	CFM	m³H	in.	mm	ft.	m	ft.	m
BEM0185*S7A^A	BMA130	13,000	3,800	18,350	5,400	15,000	4,400	15,000	4,400	1	2,200	3,738	18	457	60	18.5	45	14
BEM0225*S7A^A	BMA155	16,500	4,850	24,000	7,050	20,000	5,850	20,000	5,850	1	2,100	3,568	18	457	60	18.5	45	14
BEM0405*S7A^A	BMA245	24,500	7,200	35,000	10,250	29,500	8,650	29,500	8,650	2	4,450	7,561	18	457	60	18.5	45	14
BEM0475*S7A^A	BMA300	32,100	9,400	47,500	13,900	37,900	11,100	37,900	11,100	2	4,250	7,221	18	457	60	18.5	45	14
BEM0575*S7A^A	BMA365	36,500	10,700	57,500	16,850	46,250	13,550	45,400	13,300	3	6,650	11,298	18	457	60	18.5	45	14
BEM0675*S7A^A	BMA450	45,000	13,200	67,100	19,650	53,750	15,750	52,500	15,400	3	6,350	10,789	18	457	60	18.5	45	14
BEM0775*S7A^A	BMA510	51,000	14,950	77,100	22,600	61,250	17,950	60,850	17,850	4	8,900	15,121	18	457	60	18.5	45	14
BEM0975*S7A^A	BMA600	65,000	19,050	97,100	28,450	77,100	22,600	77,100	22,600	4	8,500	14,442	18	457	60	18.5	45	14
BEM1115*S7A^A	BMA710	74,150	21,750	111,215	32,600	88,750	26,000	87,100	25,550	5	10,150	17,245	18	457	60	18.5	45	14

Notes:

Capacities shown are Application Capacities reflecting nominal operation at 10°F TD. For models within the scope of the DOE AWEF (Annual Walk-in Energy Factor) standard, the Net Capacity is determined by the AHRI 1250 test method. DOE will publish this compliance data at www.regulations.doe.gov

*** = Electrical Code Designator (see Nomenclature details)**

SPECIFICATIONS

		EC Motors (includes 2-Speed, Fixed Speed and VSEC)						PSC Motors (includes Standard and Totally Enclosed)					
		115/1/60		208-230/1/60		460/1/60		115/1/60		208-230/1/60		460/1/60	
New Model	HP	Amps	Watts	Amps	Watts	Amps	Watts	Amps	Watts	Amps	Watts	Amps	Watts
BEM0185*S7A^A	1/4	3.5	208	1.7	208	1.6	191	4	300	1.8	305	1	305
BEM0225*S7A^A	1/4	3.5	208	1.7	208	1.6	191	4	300	1.8	305	1	305
BEM0405*S7A^A	1/4	7	417	3.5	417	3.2	382	8	600	3.6	610	2	610
BEM0475*S7A^A	1/4	7	417	3.5	417	3.2	382	8	600	3.6	610	2	610
BEM0575*S7A^A	1/4	10.4	625	5.2	625	4.8	573	12	900	5.4	915	3	915
BEM0675*S7A^A	1/4	10.4	625	5.2	625	4.8	573	12	900	5.4	915	3	915
BEM0775*S7A^A	1/4	13.9	834	7	834	6.4	764	16	1,200	7.2	1,220	4	1,220
BEM0975*S7A^A	1/4	13.9	834	7	834	6.4	764	16	1,200	7.2	1,220	4	1,220
BEM1115*S7A^A	1/4	-	-	8.7	1,042	8	955	-	-	9	1,525	5	1,525

Notes:

*** = Electrical Code Designator (see Nomenclature details)**

^ = Motor Code Designator (see Nomenclature details)

PHYSICAL DATA

							Approx. Net Weight	
FPI	Model	No. of Fans	Coil Inlet OD	Suction OD	Equalizer OD	Drain MPT	Lbs.	Kg
7	BEM0185*S7A^A	1	1/2	7/8	1/4	3/4	140	64
7	BEM0225*S7A^A	1	1/2	1-1/8	1/4	3/4	149	68
7	BEM0405*S7A^A	2	7/8	1-3/8	1/4	3/4	163	74
7	BEM0475*S7A^A	2	7/8	1-3/8	1/4	3/4	180	82
7	BEM0575*S7A^A	3	7/8	1-3/8	1/4	3/4	243	110
7	BEM0675*S7A^A	3	1-1/8	1-3/8	1/4	3/4	276	125
7	BEM0775*S7A^A	4	1-1/8	1-5/8	1/4	3/4	279	127
7	BEM0975*S7A^A	4	1-3/8	1-5/8	1/4	3/4	310	141
7	BEM1115*S7A^A	5	1-3/8	1-5/8	1/4	3/4	346	157

Notes:

*** = Electrical Code Designator (see Nomenclature details)**

^ = Motor Code Designator (see Nomenclature details)

AWEF

Model	Cooler			
	R-404A/ R-507A	R-448A/ R-449A	R-407A/ R-407F	R-407C
	AWEF	AWEF	AWEF	AWEF
BEM0185*S7AMA	-	9	-	-
BEM0225*S7AMA	-	9	9	9
BEM0405*S7AMA	-	9	9	9
BEM0475*S7AMA	9	9	9	9
BEM0575*S7AMA	-	9	9	9
BEM0675*S7AMA	-	9	9	9
BEM0775*S7AMA	-	9	9	9
BEM0975*S7AMA	9	9	9	9
BEM1115*S7AMA	-	9	9	9

Notes:

*** = Electrical Code Designator (see Nomenclature details)**

DIMENSIONS

No. of Fans	Unit Dimensions											
	A		B		C		D		E		F	
	in.	mm	in.	mm	in.	mm	in.	mm	in.	mm	in.	mm
1	39 7/8	1,011	30 1/4	768	-	-	-	-	-	-	68 1/4	1,733
2	67 7/8	1,722	58 1/4	1,480	-	-	-	-	-	-	96 1/4	2,444
3	95 7/8	2,434	86 1/4	2,191	-	-	-	-	-	-	124 1/4	3,155
4	123 7/8	3,145	114 1/4	2,902	56	1,422	58 1/4	1,480	-	-	152 1/4	3,866
5	139 3/8	3,539	129 3/4	3,296	51	1,295	53 1/4	1,353	25 1/2	648	167 1/4	4,260

UNITS COOLERS

BOHN

MEDIUM PROFILE EVAPORATOR

PERFORMANCE DATA

		R-404A/R-507A		R-448A/R-449A		R-407A/R-407F		R-407C									
		Application Capacity[1]								Fan Data			Air Throw				
		10°F TD/ -20°F SST	6°C TD/-29°C SST	10°F TD/ -20°F SST	6°C TD/-29°C SST	10°F TD/ -20°F SST	6°C TD/-29°C SST	10°F TD/ -20°F SST	6°C TD/-29°C SST				Diameter		Standard (Molded Fan Guard)		Diffused (Wire Fan Guard)	
New Model	Legacy Model	BTUH	Watts	BTUH	Watts	BTUH	Watts	BTUH	Watts	No. of Fans	CFM	m^3H	in.	mm	ft.	m	ft.	m
BEM0125*S6E^A	BME101	10,100	2,950	12,500	3,650	11,200	3,300	11,200	3,300	1	2,250	3,823	18	457	60	18.5	45	14
BEM0135*S6E^A	BME140	14,000	4,100	17,000	5,000	16,000	4,700	15,000	4,400	1	2,150	3,653	18	457	60	18.5	45	14
BEM0250*S6E^A	BME190	19,600	5,750	25,000	7,350	21,650	6,350	20,500	6,000	2	4,450	7,731	18	457	60	18.5	45	14
BEM0300*S6E^A	BME260	26,000	7,600	29,600	8,650	28,500	8,350	28,500	8,350	2	4,350	7,391	18	457	60	18.5	45	14
BEM0370*S6E^A	BME310	31,000	9,100	36,650	10,750	34,000	9,950	34,000	9,950	3	6,800	11,553	18	457	60	18.5	45	14
BEM0475*S6E^A	BME390	39,000	11,450	47,100	13,800	43,000	12,600	43,000	12,600	3	6,500	11,044	18	457	60	18.5	45	14
BEM0595*S6E^A	BME430	43,750	12,800	59,150	17,350	49,150	14,400	46,500	13,650	4	8,500	14,442	18	457	60	18.5	45	14
BEM0735*S6E^A	BME520	53,750	15,750	73,350	21,500	61,250	17,950	57,000	16,700	4	8,100	13,762	18	457	60	18.5	45	14
BEM0850*S6E^A	BME620	62,000	18,150	84,600	24,800	71,520	20,950	68,000	19,950	5	9,650	16,395	18	457	60	18.5	45	14
BEM0125*S4E^A	BML100	10,000	2,950	14,000	4,100	12,500	3,650	12,000	3,500	1	2,250	3,823	18	457	60	18.5	45	14
BEM0225*S4E^A	BML165	17,100	5,000	21,500	6,300	18,750	5,500	18,750	5,500	2	4,750	8,070	18	457	60	18.5	45	14
BEM0250*S4E^A	BML220	22,000	6,450	25,500	7,450	24,000	7,050	24,000	7,050	2	4,550	7,731	18	457	60	18.5	45	14
BEM0325*S4E^A	BML250	25,000	7,350	32,500	7,500	27,900	8,200	27,000	7,900	3	7,100	12,063	18	457	60	18.5	45	14
BEM0420*S4E^A	BML330	33,000	9,650	41,650	12,200	36,500	10,700	36,500	10,700	3	6,750	11,468	18	457	60	18.5	45	14
BEM0490*S4E^A	BML370	37,000	10,850	48,750	14,300	40,500	11,850	40,000	11,700	4	8,800	14,951	18	457	60	18.5	45	14
BEM0620*S4E^A	BML440	45,400	13,300	61,650	10,850	51,250	15,000	48,500	14,200	4	8,400	14,272	18	457	60	18.5	45	14
BEM0720*S4E^A	BML530	53,000	15,550	71,250	20,900	59,600	17,450	58,000	17,000	5	10,000	16,990	18	457	60	18.5	45	14

Notes:

Capacities shown are Application Capacities reflecting nominal operation at 10°F TD. For models within the scope of the DOE AWEF (Annual Walk-in Energy Factor) standard, the Net Capacity is determined by the AHRI 1250 test method. DOE will publish this compliance data at www.regulations.doe.gov

*** = Electrical Code Designator (see Nomenclature details)**

^ = Motor Code Designator (see Nomenclature details) Net Capacity is available upon request

SPECIFICATIONS

		EC Motors (includes 2-Speed, Fixed Speed and		PSC Motors (includes Standard and Totally-Enclosed)		Defrost Heaters		PSC Motors (includes Standard and Totally-Enclosed)		EC Motors (includes 2-Speed, Fixed Speed and		Defrost Heaters		PSC Motors (includes Standard and Totally-Enclosed)		Defrost Heaters	
		208-230/1/60				208-230/1/60	208-230/3/60	460/1/60				460/1/60	460/3/60	575/1/60		575/3/60	
New Model	HP	Amps	Watts	Amps	Watts	Total Amps		Amps	Watts	Amps	Watts	Total Amps		Amps	Watts	Total Amps	Watts
BEM0125*S6E^A	1/4	1.7	208	1.8	305	11.9	8.2	1	305	1.6	191	5.9	4.1	0.8	310	3.3	2,730
BEM0135*S6E^A	1/4	1.7	208	1.8	305	11.9	8.2	1	305	1.6	191	5.9	4.1	0.8	310	3.3	2,730
BEM0250*S6E^A	1/4	3.5	417	3.6	610	23.3	16	2	610	3.2	382	11.6	8.3	1.5	620	6.6	5,350
BEM0300*S6E^A	1/4	3.5	417	3.6	610	23.3	16	2	610	3.2	382	11.6	8.3	1.5	620	6.6	5,350
BEM0370*S6E^A	1/4	5.2	625	5.4	915	33.7	23.2	3	915	4.8	573	16.8	12	2.3	930	9.6	7,750
BEM0475*S6E^A	1/4	5.2	625	5.4	915	33.7	23.2	3	915	4.8	573	16.8	12	2.3	930	9.6	7,750
BEM0595*S6E^A	1/4	7	834	7.2	1,220	-	30.5	4	1,220	6.4	764	22.2	15.8	3	1,240	12.6	10,200
BEM0735*S6E^A	1/4	7	834	7.2	1,220	-	30.5	4	1,220	6.4	764	22.2	15.8	3	1,240	12.6	10,200
BEM0850*S6E^A	1/4	8.7	1,042	9	1,525	-	34.7	5	1,525	8	955	25.2	18.1	3.8	1,550	14.4	11,600
BEM0125*S4E^A	1/4	1.7	208	1.8	305	11.9	8.2	1	305	1.6	191	5.9	4.1	0.8	310	3.3	2,730
BEM0225*S4E^A	1/4	3.5	417	3.6	610	23.3	16	2	610	3.2	382	11.6	8.3	1.5	620	6.6	5,350
BEM0250*S4E^A	1/4	3.5	417	3.6	610	23.3	16	2	610	3.2	382	11.6	8.3	1.5	620	6.6	5,350
BEM0325*S4E^A	1/4	5.2	625	5.4	915	33.7	23.2	3	915	4.8	573	16.8	12	2.3	930	9.6	7,750
BEM0420*S4E^A	1/4	5.2	625	5.4	915	33.7	23.2	3	915	4.8	573	16.8	12	2.3	930	9.6	7,750
BEM0490*S4E^A	1/4	7	834	7.2	1,220	-	30.5	4	1,220	6.4	764	22.2	15.8	3	1,240	12.6	10,200
BEM0620*S4E^A	1/4	7	834	7.2	1,220	-	30.5	4	1,220	6.4	764	22.2	15.8	3	1,240	12.6	10,200
BEM0720*S4E^A	1/4	8.7	1,042	9	1,525	-	34.7	5	1,525	8	955	25.2	18.1	3.8	1,550	14.4	11,600

Notes:

*** = Electrical Code Designator (see Nomenclature details)**

^ = Motor Code Designator (see Nomenclature details)

UNITS COOLERS

BOHN

MEDIUM PROFILE EVAPORATOR (cont'd)

PHYSICAL DATA

FPI	Model	Coil Inlet OD	Suction OD	Equalizer OD	Drain MPT	Side Port OD	Hot Gas Pan Conns OD	Approx. Net Weight Lbs.	Approx. Net Weight Kg
6	BEM0125*S6E^A	1/2	7/8	1/4	3/4			143	65
6	BEM0135*S6E^A	1/2	7/8	1/4	3/4			153	69
6	BEM0250*S6E^A	7/8	1-3/8	1/4	3/4			168	76
6	BEM0300*S6E^A	1-1/8	1-3/8	1/4	3/4			186	84
6	BEM0370*S6E^A	1-1/8	1-5/8	1/4	3/4			255	116
6	BEM0475*S6E^A	1-3/8	1-5/8	1/4	3/4			288	131
6	BEM0595*S6E^A	1-1/8	1-5/8	1/4	3/4			324	147
6	BEM0735*S6E^A	1-3/8	1-5/8	1/4	3/4			365	165
6	BEM0850*S6E^A	1-3/8	1-5/8	1/4	3/4			411	186
4	BEM0125*S4E^A	7/8	7/8	1/4	3/4			152	69
4	BEM0225*S4E^A	1-3/8	1-3/8	1/4	3/4			165	75
4	BEM0250*S4E^A	1-3/8	1-3/8	1/4	3/4			183	83
4	BEM0325*S4E^A	1-5/8	1-5/8	1/4	3/4			252	114
4	BEM0420*S4E^A	1-5/8	1-5/8	1/4	3/4			284	129
4	BEM0490*S4E^A	1-5/8	1-5/8	1/4	3/4			318	144
4	BEM0620*S4E^A	1-5/8	1-5/8	1/4	3/4			358	163
4	BEM0720*S4E^A	1-5/8	1-5/8	1/4	3/4			403	183

Notes:

*** = Electrical Code Designator (see Nomenclature details)**

^ = Motor Code Designator (see Nomenclature details)

AWEF

FPI	Model	Cooler				Freezer			
		R-404A/ R-507A	R-448A/ R-449A	R-407A/ R-407F	R-407C	R-404A/ R-507A	R-448A/ R-449A	R-407A/ R-407F	R-407C
		AWEF	AWEF	AWEF	AWEF	AWEF	AWEF	AWEF	AWEF
6	BEM0125*S6EMA	-	-	-	-	4.04	4.1	4.06	4.05
6	BEM0135*S6EMA	-	-	9	9	4.06	4.12	4.09	4.07
6	BEM0250*S6EMA	-	-	9	9	4.15	4.15	4.15	4.15
6	BEM0300*S6EMA	-	9	9	9	4.15	4.15	4.15	4.15
6	BEM0370*S6EMA	-	-	-	9	4.15	4.15	4.15	4.15
6	BEM0475*S6EMA	9	9	9	9	4.15	4.15	4.15	4.15
6	BEM0595*S6EMA	-	9	9	9	4.15	4.15	4.15	4.15
6	BEM0735*S6EMA	9	9	9	9	4.15	4.15	4.15	4.15
6	BEM0850*S6EMA	9	9	9	9	4.15	4.15	4.15	4.15
4	BEM0125*S4EMA	-	-	-	9	4.04	4.09	4.06	4.05
4	BEM0225*S4EMA	-	-	-	-	-	4.15	4.15	-
4	BEM0250*S4EMA	-	-	9	9	4.15	4.15	4.15	4.15
4	BEM0325*S4EMA	-	-	-	-	-	4.15	4.15	-
4	BEM0420*S4EMA	-	9	9	9	4.15	4.15	4.15	4.15
4	BEM0490*S4EMA	-	-	-	-	-	4.15	4.15	4.15
4	BEM0620*S4EMA	-	9	9	9	4.15	4.15	4.15	4.15
4	BEM0720*S4EMA	-	9	9	9	4.15	4.15	4.15	4.15

Notes: *** = Electrical Code Designator (see Nomenclature details)**

UNITS COOLERS

BOHN

MEDIUM PROFILE EVAPORATOR

PERFORMANCE DATA

		R-404A/R-507A		R-448A/R-449A		R-407A/R-407F		R-407C										
		Application Capacity‹								Fan Data			Air Throw					
		10°F TD/ -20°F SST	6°C TD/-29°C SST	10°F TD/ -20°F SST	6°C TD/-29°C SST	10°F TD/ -20°F SST	6°C TD/-29°C SST	10°F TD/ -20°F SST	6°C TD/-29°C SST				Diameter		Standard (Molded Fan Guard)		Diffused (Wire Fan Guard)	
New Model	Legacy Model	BTUH	Watts	BTUH	Watts	BTUH	Watts	BTUH	Watts	No. of Fans	CFM	m3H	in.	mm	ft.	m	ft.	m
BEM0250*S6H^A	BMG190	19,600	5,750	25,000	7,350	21,650	6,350	20,500	6,000	2	4,450	7,731	18	457	60	18.5	45	14
BEM0300*S6H^A	BMG260	26,000	7,600	29,600	8,650	28,500	8,350	28,500	8,350	2	4,350	7,391	18	457	60	18.5	45	14
BEM0370*S6H^A	BMG310	31,000	9,100	36,650	10,750	34,000	9,950	34,000	9,950	3	6,800	11,553	18	457	60	18.5	45	14
BEM0475*S6H^A	BMG390	39,000	11,450	47,100	13,800	43,000	12,600	43,000	12,600	3	6,500	11,044	18	457	60	18.5	45	14
BEM0595*S6H^A	BMG430	43,750	12,800	59,150	17,350	49,150	14,400	46,500	13,650	4	8,500	14,442	18	457	60	18.5	45	14
BEM0735*S6H^A	BMG520	53,750	15,750	73,350	21,500	61,250	17,950	57,000	16,700	4	8,100	13,762	18	457	60	18.5	45	14
BEM0225*S4H^A	BMF165	17,100	5,000	21,500	6,300	18,750	5,500	18,750	5,500	2	4,750	8,070	18	457	60	18.5	45	14
BEM0250*S4H^A	BMF220	22,000	6,450	25,500	7,450	24,000	7,050	24,000	7,050	2	4,550	7,731	18	457	60	18.5	45	14
BEM0325*S4H^A	BMF250	25,000	7,350	32,500	9,500	27,900	8,200	27,000	7,900	3	7,100	12,063	18	457	60	18.5	45	14
BEM0420*S4H^A	BMF330	33,000	9,650	41,650	12,200	36,500	10,700	36,500	10,700	3	6,750	11,468	18	457	60	18.5	45	14
BEM0490*S4H^A	BMF370	37,000	10,850	48,750	14,300	40,500	11,850	40,000	11,700	4	8,800	14,951	18	457	60	18.5	45	14
BEM0620*S4H^A	BMF440	45,400	13,300	61,650	18,050	51,250	15,000	48,500	14,200	4	8,400	14,272	18	457	60	18.5	45	14

Notes:
‹ = Capacities shown are Application Capacities reflecting nominal operation at 10°F TD. For models within the scope of the DOE AWEF (Annual Walk-in Energy Factor) standard, the Net Capacity is determined by the AHRI 1250 test method. DOE will publish this compliance data at www.regulations.doe.gov
*** = Electrical Code Designator (see Nomenclature details)**
^ = Motor Code Designator (see Nomenclature details) Net Capacity is available upon request

SPECIFICATIONS

		EC Motors (includes 2-Speed, Fixed Speed and VSEC)						PSC Motors (includes Standard and Totally-Enclosed)						Drain Pan Heaters			
		115/1/60		208-230/1/60		460/1/60		115/1/60		208-230/1/60		460/1/60		Watts	115/1/60	208-230/1/60	460/1/61
New Model	HP	Amps	Watts	Amps	Watts	Amps	Watts	Amps	Watts	Amps	Watts	Amps	Watts		Total Amps		
BEM0250*S6H^A	1/4	7	417	3.5	417	3.2	382	8	600	3.6	610	2	610	950	8.3	4.1	2.1
BEM0300*S6H^A	1/4	7	417	3.5	417	3.2	382	8	600	3.6	610	2	610	950	8.3	4.1	2.1
BEM0370*S6H^A	1/4	10.4	625	5.2	625	4.8	573	12	900	5.4	915	3	915	1,350	11.7	5.9	2.9
BEM0475*S6H^A	1/4	10.4	625	5.2	625	4.8	573	12	900	5.4	915	3	915	1,350	11.7	5.9	2.9
BEM0595*S6H^A	1/4	13.9	834	7	834	6.4	764	16	1,200	7.2	1,220	4	1220	1,800	15.7	7.8	3.9
BEM0735*S6H^A	1/4	13.9	834	7	834	6.4	764	16	1,200	7.2	1,200	4	1220	1,800	15.7	7.8	3.9
BEM0225*S4H^A	1/4	7	417	3.5	417	3.2	382	8	600	3.6	610	2	610	950	8.3	4.1	2.1
BEM0250*S4H^A	1/4	7	417	3.5	417	3.2	382	8	600	3.6	610	2	610	950	8.3	4.1	2.1
BEM0325*S4H^A	1/4	10.4	625	5.2	625	4.8	573	12	900	5.4	915	3	915	1,350	11.7	5.9	2.9
BEM0420*S4H^A	1/4	10.4	625	5.2	625	4.8	573	12	900	5.4	915	3	915	1,350	11.7	5.9	2.9
BEM0490*S4H^A	1/4	13.9	834	7	834	6.4	764	16	1,200	7.2	1,220	4	1220	1,800	15.7	7.8	3.9
BEM0620*S4H^A	1/4	13.9	834	7	834	6.4	764	16	1,200	7.2	1,200	4	1220	1,800	15.7	7.8	3.9

Notes:
*** = Electrical Code Designator (see Nomenclature details)**
^ = Motor Code Designator (see Nomenclature details)

PHYSICAL DATA

FPI	Model	Coil Inlet OD	Suction OD	Equalizer OD	Drain MPT	Side Port OD	Hot Gas Pan Conns OD	Approx. Net Weight Lbs.	Approx. Net Weight Kg
6	BEM0250*S6H^A	7/8	1-3/8	1/4	3/4	5/8	7/8	213	96
6	BEM0300*S6H^A	1-1/8	1-3/8	1/4	3/4	5/8	7/8	231	105
6	BEM0370*S6H^A	1-1/8	1-5/8	1/4	3/4	5/8	7/8	255	116
6	BEM0475*S6H^A	1-3/8	1-5/8	1/4	3/4	5/8	7/8	288	131
6	BEM0595*S6H^A	1-1/8	1-5/8	1/4	3/4	5/8	7/8	324	147
6	BEM0735*S6H^A	1-3/8	1-5/8	1/4	3/4	5/8	7/8	365	165
4	BEM0225*S4H^A	7/8	1-3/8	1/4	3/4	5/8	7/8	210	95
4	BEM0250*S4H^A	1-1/8	1-3/8	1/4	3/4	5/8	7/8	228	104
4	BEM0325*S4H^A	1-1/8	1-5/8	1/4	3/4	5/8	7/8	252	114
4	BEM0420*S4H^A	1-3/8	1-5/8	1/4	3/4	5/8	7/8	284	129
4	BEM0490*S4H^A	1-1/8	1-5/8	1/4	3/4	5/8	7/8	318	144
4	BEM0620*S4H^A	1-3/8	1-5/8	1/4	3/4	5/8	7/8	358	163

Notes:
*** = Electrical Code Designator (see Nomenclature details)**
^ = Motor Code Designator (see Nomenclature details)

AWEF

FPI	Model	Cooler				Freezer			
		R-404A/ R-507A	R-448A/ R-449A	R-407A/ R-407F	R-407C	R-404A/ R-507A	R-448A/ R-449A	R-407A/ R-407F	R-407C
		AWEF	AWEF	AWEF	AWEF	AWEF	AWEF	AWEF	AWEF
6	BEM0250*S6HMA	-	-	9	9	4.15	4.15	4.15	4.15
6	BEM0300*S6HMA	-	9	9	9	4.15	4.15	4.15	4.15
6	BEM0370*S6HMA	-	-	-	9	4.15	4.15	4.15	4.15
6	BEM0475*S6HMA	9	9	9	9	4.15	4.15	4.15	4.15
6	BEM0595*S6HMA	-	9	9	9	4.15	4.15	4.15	4.15
6	BEM0735*S6HMA	9	9	9	9	4.15	4.15	4.15	4.15
4	BEM0225*S4HMA	-	-	-	-	4.15	4.15	4.15	4.15
4	BEM0250*S4HMA	-	-	9	9	4.15	4.15	4.15	4.15
4	BEM0325*S4HMA	-	-	-	-	4.15	4.15	4.15	4.15
4	BEM0420*S4HMA	-	9	9	9	4.15	4.15	4.15	4.15
4	BEM0490*S4HMA	-	-	-	-	4.15	4.15	4.15	4.15
4	BEM0620*S4HMA	-	9	9	9	4.15	4.15	4.15	4.15

Notes:
*** = Electrical Code Designator (see Nomenclature details)**

INDOOR & OUTDOOR AIR COOLED CONDENSING UNITS

1/2 - 6 HP AIR-COOLED CONDENSING UNITS

NOMENCLATURE

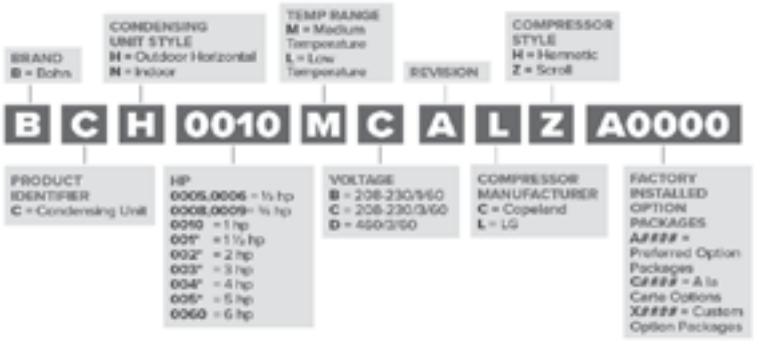

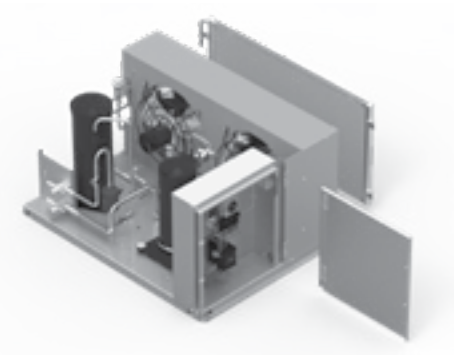

STANDARD FEATURES

Microchannel Coil	Fixed High Pressure Control
Head Pressure Control Valve	Sealed Liquid Line Drier (new)
• 150 psi standard - except Low Temperature Scroll models which are 100 psi	Liquid Line Sight Glass (new)
Crankcase Heater (optional for indoor models)	Liquid Line and Suction Line Base Valves
Adjustable Low Pressure Control	Painted Steel Cabinet (outdoor and indoor models)
	Removable & Hinged E-box Door with Captive Fasteners

ELECTRICAL OPTIONS

Option	Outdoor	Indoor
Fixed low pressure control	**Option**	**Option**
Air or Electric defrost timer only	**Option**	**Option**
intelliGen™/Beacon II™	**Option**	**N/A**
Crankcase Heater	**Standard**	**Option**
Dual pressure control (not available with intelliGen™/Beacon II™ or Low Ambient Kit)	**Option**	**Option**
Electric defrost with timer & contactors (C3 cabinet)	**Option**	**Option**
Fused disconnect	**Option**	**Option**
Phase loss / low voltage monitor (not available with intelliGen™/Beacon II™ or Low Ambient Kit)	**Option**	**Option**
Smart Defrost Kit™ (Factory-Installed)	**Option**	**Option**
Variable speed EC (VSEC) motors with Orbus controller	**Option**	**Option**

MECHANICAL OPTIONS

Option	Outdoor	Indoor
12” Extended legs	**Option**	**Option**
Head pressure control flooding valve	**Standard**	**N/A**
Liquid line drier, sight glass	**Standard**	**Standard**
Liquid line solenoid valve and pumpdown switch (not available with intelliGen™/Beacon II™)	**Option**	**Option**
Low ambient kit with heated and insulated receiver, Time Delay relay	**Option**	**N/A**
Oil separator with discharge line check valve (C3 cabinet)	**Option**	**Option**
Oversize receiver (C2 & C3 cabinets)	**Option**	**Option**
Precharged refrigerant with quick connect fittings	**Option**	**Option**
Replaceable core liquid line filter (C3 cabinet)	**Option**	**Option**
Replaceable core suction line filter (C3 cabinet)	**Option**	**Option**

INDOOR & OUTDOOR AIR COOLED CONDENSING UNITS

1/2 - 6 HP AIR-COOLED CONDENSING UNITS

PREFERRED OPTION PACKAGES:

Please see Price Book or The HUB for availability

Package	Description (standard base model features + indicated option below)
A0000	Standard Base
A0100	Timer-Air
A0200	Timer-Elec
A0201	Timer-Elec + Fixed Speed EC Motor
A0300	Timer Contactor
A0301	Timer Contactor + Fixed Speed EC Motor
A0400	intelliGen™/Beacon II™
A0401	intelliGen™/Beacon II™ + Fixed Speed EC Motor
A0500	Timer-Air-Paragon
A0600	Timer-Elec-Paragon
A0601	Timer-Elec-Paragon + Fixed Speed EC Motor
A0700	Timer-Contactor-Paragon
A0701	Timer-Contactor-Paragon + Fixed Speed EC Motor
A0800	Timer-Air-Paragon + Aluminum Fin/CopperTube Coil
A0900	intelliGen™/Beacon II™ + Suction Filter
A0901	intelliGen™/Beacon II™ + Suction Filter + Fixed Speed EC Motor
A1000	Accumulator
A1001	Accumulator + Fixed Speed EC Motor
A1100	Timer-Air-Paragon + Aluminum Fin/CopperTube Coil + Accumulator
A1200	R-404A Precharge
A1201	R-404A Precharge + Fixed Speed EC Motor
A1202	R-407A Precharge
A1203	R-407A Precharge + Fixed Speed EC Motor
A1204	R-448A Precharge
A1205	R-448A Precharge + Fixed Speed EC Motor

INDOOR & OUTDOOR AIR COOLED CONDENSING UNITS

1/2 - 6 HP AIR-COOLED CONDENSING UNITS

STANDARD FEATURES

Microchannel Coil	Sealed Liquid Line Drier (new)
Head Pressure Control Valve (optional for indoor models)	Liquid Line Sight Glass (new)
Crankcase Heater (optional for indoor models)	Liquid Line and Suction Line Base Valves
Adjustable Low Pressure Control	Painted Steel Cabinet
Fixed High Pressure Control	Removable & Hinged E-box Door with Captive Fasteners

ELECTRICAL OPTIONS

Option	Outdoor	Indoor
Fixed low pressure control	**Option**	**Option**
Air or Electric defrost timer only	**Option**	**Option**
intelliGen™/Beacon II™	**Option**	**N/A**
Crankcase Heater	**Standard**	**Option**
Dual pressure control (not available with intelliGen™/Beacon II™ or Low Ambient Kit)	**Option**	**Option**
Electric defrost with timer & contactors (C3 cabinet)	**Option**	**Option**
Fused disconnect	**Option**	**Option**
Phase loss / low voltage monitor	**Option**	**Option**
Smart Defrost Kit™ (Factory-Installed)	**Option**	**Option**
Variable speed EC (VSEC) motors with Orbus controller	**Option**	**Option**

MECHANICAL OPTIONS

Option	Outdoor	Indoor
12” Extended legs	**Option**	**Option**
Head pressure control flooding valve	**Standard**	**N/A**
Liquid line drier, sight glass	**Standard**	**Standard**
Liquid line solenoid valve and pumpdown switch (not available with intelliGen™/Beacon II™)	**Option**	**Option**
Low ambient kit with heated and insulated receiver, TD relay	**Option**	**N/A**
Oil separator with discharge line check valve (C3 cabinet)	**Option**	**Option**
Oversize receiver (C2 & C3 cabinets)	**Option**	**Option**
Precharged refrigerant with quick connect fittings	**Option**	**Option**
Replaceable core liquid line filter (C3 cabinet)	**Option**	**Option**
Replaceable core suction line filter (C3 cabinet)	**Option**	**Option**

INDOOR & OUTDOOR AIR COOLED CONDENSING UNITS

1/2 - 6 HP AIR-COOLED CONDENSING UNITS

Medium Temperature Models - Hermetic Compressors



PERFORMANCE DATA

R-448A/R-449A		Capacity BTUH @ 90°F Ambient by SST							
Model	Compressor	+40°F	+35°F	+30°F	+25°F	+20°F	+15°F	+10°F	+0°F
BC*0015M^ACH	CS10K6E	—	—	15,900	14,040	12,300	10,670	[illegible]	6,480
BC*0020M^ACH	CS12K6E	—	—	17,470	15,360	13,460	11,680	10,030	7,230
BC*0025M^ACH	CS14K6E	—	—	19,860	17,650	15,450	13,460	11,570	8,350
BC*0030M^ACH	CS18K6E	—	—	27,040	23,940	21,080	18,450	16,010	11,610
BC*0032M^ACH	CS20K6E	—	—	30,330	27,140	24,110	21,280	18,620	13,660

R-407A		Capacity BTUH @ 90°F Ambient by SST							
Model	Compressor	+40°F	+35°F	+30°F	+25°F	+20°F	+15°F	+10°F	+0°F
BC*0015M^ACH	CS10K6E	—	—	15,940	14,130	12,440	10,860	9,370	6,750
BC*0020M^ACH	CS12K6E	—	—	17,630	15,680	13,810	12,060	10,420	7,510
BC*0025M^ACH	CS14K6E	—	—	19,910	17,740	15,640	13,680	11,830	8,570
BC*0030M^ACH	CS18K6E	—	—	28,190	24,630	21,410	18,530	15,900	11,430
BC*0032M^ACH	CS20K6E	—	—	31,100	27,570	24,300	21,340	18,610	13,690

Notes:

UNIT SPECIFICATIONS

		Refrigerant Line Connections (OD)		Rec. Capacity @90% full (lbs)			Dimensions (In.)			Net Wt.	Sound Data
Model	Compressor	Liquid	Suction	Std	Opt	Cabinet	Depth	Width	Height	(lbs.)	dBa_a
BC*0015M^ACH	CS10K6E	1/2	7/8	14	20	C2	28.25	39.125	19.75	213	64
BC*0020M^ACH	CS12K6E	1/2	7/8	14	20	C2	28.25	39.125	19.75	223	64
BC*0025M^ACH	CS14K6E	1/2	7/8	14	20	C2	28.25	39.125	19.75	228	64
BC*0030M^ACH	CS18K6E	1/2	7/8	20	40	C3	30.25	43.875	29.25	300	64
BC*0032M^ACH	CS20K6E	1/2	7/8	20	40	C3	30.25	43.875	29.25	305	64

INDOOR & OUTDOOR AIR COOLED CONDENSING UNITS

1/2 - 6 HP AIR-COOLED CONDENSING UNITS

Medium Temperature Models - Hermetic Compressors

ELECTRICAL DATA

Model	Compressor	Power	Compressor		Condenser		Air Defrost or Remote Controller		Remote Loads			
											Electric Defrost	
			RLA[c]	LRA	No. Fans	FLA	MCA	MOPD	Evap. Fan Amps	Defrost Htrs. Amps	MCA	MOPD
BC*0015MBACH	CS10K6E-PFV	208-230/1/60	11.1	56	2	1	15	25	10	30	37.5	40
BC*0015MCACH	CS10K6E-TF5	208-230/3/60	7.2	51	2	1	15	15	9	23	28.8	30
BC*0020MBACH	CS12K6E-PFV	208-230/1/60	9.8	56	2	1	15	20	10	30	37.5	40
BC*0020MCACH	CS12K6E-TF5	208-230/3/60	6.7	51	2	1	15	15	9	23	28.8	30
BC*0025MBACH	CS14K6E-PFV	208-230/1/60	12.4	61	2	1	20	25	10	30	37.5	40
BC*0025MCACH	CS14K6E-TF5	208-230/3/60	8.5	55	2	1	15	20	9	23	28.8	30
BC*0030MBACH	CS18K6E-PFV	208-230/1/60	14.4	82	1	3.5	21.4	35	10	30	37.5	45
BC*0030MCACH	CS18K6E-TF5	208-230/3/60	9.4	65.5	1	3.5	20	20	10	30	37.5	40
BC*0030MDACH	CS18K6E-TFD	460/3/60	4.2	33	1	1.9	15	15	9	23	28.8	30
BC*0032MBACH	CS20K6E-PFV	208-230/1/60	17.9	96	1	3.5	25.9	40	10	30	37.5	50
BC*0032MCACH	CS20K6E-TF5	208-230/3/60	13.3	75	1	3.5	20.2	30	10	30	37.5	40
BC*0032MDACH	CS20K6E-TFD	460/3/60	4.6	40	1	1.9	15	15	9	23	28.8	30

Notes:
* H = Outdoor, N = Indoor
b. Power supplied by customer
c. Per UL and NEC, RLA values have been calculated by dividing the Maximum Continuous Current (MCC) by 1.56.
d. Unless otherwise noted, model is available for 50 Hz. Consult factory for details.

AWEF DATA

Model	Indoor						Outdoor					
	R-404A/ R-507A	R-448A	R-449A	R-407A	R-407C	R-407F	R-404A/ R-507A	R-448A	R-449A	R-407A	R-407C	R-407F
BC*0015MBACH	—	—	—	—	X	X	7.6	7.6	7.6	7.6	X	X
BC*0015MCACH	—	—	—	—	X	X	7.6	7.6	7.6	7.6	X	X
BC*0020MBACH	—	X	X	X	X	X	7.6	X	X	X	X	X
BC*0020MCACH	—	—	—	—	X	X	7.6	7.6	7.6	7.6	X	X
BC*0025MBACH	—	—	—	—	X	X	7.6	7.6	7.6	7.6	X	X
BC*0025MCACH	—	—	—	—	X	X	7.6	7.6	7.6	7.6	X	X
BC*0030MBACH	5.61	—	—	—	X	X	7.6	7.6	7.6	7.6	X	X
BC*0030MCACH	5.61	5.61	5.61	—	X	X	7.6	7.6	7.6	7.6	X	X
BC*0030MDACH	5.61	5.61	5.61	5.61	X	X	7.6	7.6	7.6	7.6	X	X
BC*0032MBACH	5.61	—	—	—	X	X	7.6	7.6	7.6	7.6	X	X
BC*0032MCACH	5.61	5.61	5.61	—	X	X	7.6	7.6	7.6	7.6	X	X
BC*0032MDACH	5.61	5.61	5.61	—	X	X	7.6	7.6	7.6	7.6	X	X

Notes:
*H = Outdoor, N = Indoor
X = model not suitable for this refrigerant
— = model is not DOE AWEF compliant

INDOOR & OUTDOOR SCROLL CONDENSING UNITS

1/2 - 6 HP AIR-COOLED CONDENSING UNITS

Medium Temperature Models - Scroll Compressors

PERFORMANCE DATA

R-448A/R-449A		Capacity BTUH @ 90°F Ambient by SST							
Model	Compressor	+40°F	+35°F	+30°F	+25°F	+20°F	+15°F	+10°F	+0°F
BC*0005M^ACZ	ZB06KAE	9,680	8,840	8,030	7,260	6,530	5,840	5,200	4,090
BC*0008M^ACZ	ZB07KAE	11,150	10,260	9,420	8,590	7,790	7,030	6,300	4,950
BC*0009M^ACZ	ZB08KAE	12,580	11,680	10,770	9,870	9,020	8,160	7,340	5,780
BC*0010M^A‡Z	ZS09KAE / MPA010	13,500	12,240	11,080	10,050	9,130	8,310	7,570	6,330
BC*0015M^A‡Z	ZS13KAE / MPA013	19,570	17,670	15,910	14,340	12,930	11,690	10,580	8,710
BC*0020M^A‡Z	ZS15KAE / MPA015	22,970	20,760	18,730	16,950	15,330	13,900	12,630	10,480
BC*0025M^A‡Z	ZS19KAE / MPA019	25,270	22,880	20,700	18,720	17,000	15,460	14,070	11,760
BC*0030M^A‡Z	ZS21KAE / MBA021	37,270	34,140	31,100	28,270	25,610	23,160	20,880	16,860
BC*0035M^A‡Z	ZS26KAE / MBA026	45,170	41,130	37,250	33,700	30,310	27,240	24,440	19,780
BC*0045M^A‡Z	ZS29KAE / MBA029	45,790	42,010	38,410	35,040	31,820	28,810	26,030	21,100
BC*0050M^A‡Z	ZS33KAE / MBA033	50,040	46,000	42,110	38,410	34,880	31,620	28,470	22,790
BC*0055M^A‡Z	ZS38K4E / MRA038	55,890	51,810	47,850	43,820	39,900	36,130	32,480	25,820
BC*0060M^A‡Z	ZS45K4E / MRA045	64,210	59,590	54,990	50,460	46,130	41,830	37,700	30,120

R-407A		Capacity BTUH @ 90°F Ambient by SST							
Model	Compressor	+40°F	+35°F	+30°F	+25°F	+20°F	+15°F	+10°F	+0°F
BC*0005M^ACZ	ZB06KAE	10,150	9,230	8,340	7,510	6,740	6,040	5,420	4,430
BC*0008M^ACZ	ZB07KAE	11,520	10,680	9,850	8,970	8,080	7,230	6,430	5,050
BC*0009M^ACZ	ZB08KAE	12,540	11,940	11,210	10,340	9,430	8,490	7,520	5,790
BC*0010M^A‡Z	ZS09KAE / MPA010	14,550	13,360	12,240	11,200	10,230	9,360	8,550	7,050
BC*0015M^A‡Z	ZS13KAE / MPA013	21,110	19,300	17,610	16,050	14,610	13,300	12,080	9,900
BC*0020M^A‡Z	ZS15KAE / MPA015	24,710	22,630	20,680	18,910	17,250	15,700	14,290	11,750
BC*0025M^A‡Z	ZS19KAE / MPA019	27,230	24,970	22,870	20,920	19,090	17,450	15,890	13,090
BC*0030M^A‡Z	ZS21KAE / MBA021	38,360	35,160	32,010	29,090	26,340	23,770	21,370	17,080
BC*0035M^A‡Z	ZS26KAE / MBA026	42,110	38,470	35,120	31,890	28,900	26,130	23,550	18,940
BC*0045M^A‡Z	ZS29KAE / MBA029	46,300	42,460	38,760	35,370	32,110	29,070	26,200	20,980
BC*0050M^A‡Z	ZS33KAE / MBA033	51,350	47,200	43,230	39,460	35,870	32,550	29,350	23,530
BC*0055M^A‡Z	ZS38K4E / MRA038	56,200	52,290	48,280	44,370	40,570	36,920	33,460	26,920
BC*0060M^A‡Z	ZS45K4E / MRA045	65,340	60,610	56,130	51,600	47,260	43,130	39,200	31,980

R-407C		Capacity BTUH @ 90°F Ambient by SST							
Model	Compressor	+40°F	+35°F	+30°F	+25°F	+20°F	+15°F	+10°F	+0°F
BC*0005M^ACZ	ZB06KAE	9,050	8,160	7,330	6,550	5,840	5,190	4,610	3,640
BC*0008M^ACZ	ZB07KAE	10,540	9,640	8,740	7,890	7,080	6,320	5,610	4,370
BC*0009M^ACZ	ZB08KAE	12,060	11,070	10,100	9,180	8,280	7,430	6,620	5,160
BC*0010M^A‡Z	ZS09KAE / MPA010	13,360	12,280	11,230	10,210	9,240	8,320	7,400	5,630
BC*0015M^A‡Z	ZS13KAE / MPA013	19,040	17,460	15,900	14,420	13,010	11,650	10,330	7,780
BC*0020M^A‡Z	ZS15KAE / MPA015	22,470	20,610	18,810	17,100	15,420	13,830	12,290	9,320
BC*0025M^A‡Z	ZS19KAE / MPA019	24,930	22,890	20,910	19,000	17,190	15,440	13,760	10,580
BC*0030M^A‡Z	ZS21KAE / MBA021	35,120	32,080	29,200	26,450	23,820	21,330	18,950	14,510
BC*0035M^A‡Z	ZS26KAE / MBA026	38,430	35,230	32,090	29,110	26,260	23,530	20,890	15,790
BC*0045M^A‡Z	ZS29KAE / MBA029	42,540	38,950	35,570	32,320	29,140	26,130	23,240	17,760
BC*0050M^A‡Z	ZS33KAE / MBA033	46,520	42,680	38,930	35,410	32,010	28,700	25,520	19,430
BC*0055M^A‡Z	ZS38K4E / MRA038	57,160	52,990	48,750	44,620	40,630	36,830	33,190	26,540
BC*0060M^A‡Z	ZS45K4E / MRA045	66,930	61,820	56,840	52,150	47,540	43,190	39,070	31,570

Notes:
* H = Outdoor, N = Indoor
^ B = 208-230/1/60, C = 208-230/3/60, D = 460/3/60
‡ C = Copeland, L = LG

INDOOR & OUTDOOR SCROLL CONDENSING UNITS

1/2 - 6 HP AIR-COOLED CONDENSING UNITS

Medium Temperature Models - Scroll Compressors

UNIT SPECIFICATIONS

Model	Compressor	Refrigerant Line Connections (OD)		Rec. Capacity @90% full (lbs)		Cabinet[h]	Dimensions (In.)			Net Wt.	Sound Data
		Liquid	Suction	Std	Opt		Depth	Width	Height	(lbs.)	dBa[a]
BC*0005M^ACZ	ZB06KAE	3/8	5/8	9	—	C1	28.25	24.625	19.75	167	61
BC*0008M^ACZ	ZB07KAE	3/8	5/8	9	—	C1	28.25	24.625	19.75	168	61
BC*0009M^ACZ	ZB08KAE	3/8	5/8	9	—	C1	28.25	24.625	19.75	168	61
BC*0010M^A‡Z	ZS09KAE / MPA010	3/8	5/8	9	—	C1	28.25	24.625	19.75	179	61
BC*0015M^A‡Z	ZS13KAE / MPA013	1/2	7/8	14	20	C2	28.25	39.125	19.75	221	63
BC*0020M^A‡Z	ZS15KAE / MPA015	1/2	7/8	14	20	C2	28.25	39.125	19.75	221	63
BC*0025M^A‡Z	ZS19KAE / MPA019	1/2	7/8	14	20	C2	28.25	39.125	19.75	230	63
BC*0030M^A‡Z	ZS21KAE / MBA021	1/2	7/8	20	40	C3	30.25	43.875	29.25	297	63
BC*0035M^A‡Z	ZS26KAE / MBA026	1/2	7/8	20	40	C3	30.25	43.875	29.25	300	63
BC*0045M^A‡Z	ZS29KAE / MBA029	1/2	1 1/8	20	40	C3	30.25	43.875	29.25	327	63
BC*0050M^A‡Z	ZS33KAE / MBA033	1/2	1 1/8	20	40	C3	30.25	43.875	29.25	330	63
BC*0055M^A‡Z	ZS38K4E / MRA038	1/2	1 1/8	20	40	C3	30.25	43.875	29.25	332	63
BC*0060M^A‡Z	ZS45K4E / MRA045	1/2	1 1/8	20	40	C3	30.25	43.875	29.25	335	63

Notes:
* H = Outdoor, N = Indoor
^ B = 208-230/1/60, C = 208-230/3/60, D = 460/3/60
‡ C = Copeland, L = LG
a. Estimated sound pressure values are 10 feet from the unit. For estimating sound pressure from the unit at different distances, deduct the following from the unit values: 20 feet, deduct 6 dBA; for 40 feet, deduct 12 dBA; for 80 feet,

ELECTRICAL DATA

Model	Compressor	Power[d]	Compressor		Condenser		Air Defrost or Remote Controller		Remote Loads			
			RLA[c]	LRA	No. Fans	FLA	MCA	MOPD	Evap. Fan Amps	Defrost Htrs. Amps	Electric Defrost MCA	Electric Defrost MOPD
BC*0005MBACZ	ZB06KAE-PFV	208-230/1/60	5.4	35.7	1	0.5	15	15	5	15	20	20
BC*0005MCACZ	ZB06KAE-TF5	208-230/3/60	4.3	37.8	1	0.5	15	15	5	15	20	20
BC*0008MBACZ	ZB07KAE-PFV	208-230/1/60	5.6	48	1	0.5	15	15	5	15	20	20
BC*0008MCACZ	ZB07KAE-TF5	208-230/3/60	4.7	37.8	1	0.5	15	15	5	15	20	20
BC*0009MBACZ	ZB08KAE-PFV	208-230/1/60	7.2	47.2	1	0.5	15	15	5	15	20	20
BC*0009MCACZ	ZB08KAE-TF5	208-230/3/60	4.7	37.8	1	0.5	15	15	5	15	20	20
BC*0010MBACZ	ZS09KAE-PFV	208-230/1/60	9	40.3	1	0.5	15	20	5	15	20	25
BC*0010MCACZ	ZS09KAE-TF5	208-230/3/60	7.2	55.4	1	0.5	15	15	5	15	20	20
BC*0010MDACZ	ZS09KAE-TFD	460/3/60	3.4	28	1	0.5	15	15	5	15	20	20
BC*0015MBACZ	ZS13KAE-PFV	208-230/1/60	10.8	56	2	1	15	25	10	30	37.5	40
BC*0015MCACZ	ZS13KAE-TF5	208-230/3/60	8.7	58	2	1	15	20	9	23	28.8	30
BC*0015MDACZ	ZS13KAE-TFD	460/3/60	4.3	29	2	1	15	15	b	b	15	15
BC*0020MBACZ	ZS15KAE-PFV	208-230/1/60	14.1	68	2	1	20	30	10	30	37.5	40
BC*0020MCACZ	ZS15KAE-TF5	208-230/3/60	9.6	58	2	1	15	20	9	23	28.8	30
BC*0020MDACZ	ZS15KAE-TFD	460/3/60	4.8	29	2	1	15	15	b	b	15	15
BC*0025MBACZ	ZS19KAE-PFV	208-230/1/60	16.2	75	2	1	21.2	35	10	30	37.5	45
BC*0025MCACZ	ZS19KAE-TF5	208-230/3/60	12.3	73	2	1	20	25	9	23	28.8	35
BC*0025MDACZ	ZS19KAE-TFD	460/3/60	5.8	38	2	1	15	15	b	b	15	15
BC*0030MBACZ	ZS21KAE-PFV	208-230/1/60	20.8	112	1	3.5	29.5	50	10	30	39.5	60
BC*0030MCACZ	ZS21KAE-TF5	208-230/3/60	13.7	93	1	3.5	20.6	30	10	30	37.5	40
BC*0030MDACZ	ZS21KAE-TFD	460/3/60	6.2	48	1	1.9	15	15	9	23	28.8	30
BC*0035MBACZ	ZS26KAE-PFV	208-230/1/60	21.2	104	1	3.5	29.9	50	10	30	39.9	60
BC*0035MCACZ	ZS26KAE-TF5	208-230/3/60	13.9	93	1	3.5	20.9	30	10	30	37.5	40
BC*0035MDACZ	ZS26KAE-TFD	460/3/60	6.2	48	1	1.9	15	15	9	23	28.8	30
BC*0045MBACZ	ZS29KAE-PFV	208-230/1/60	23.4	137	1	3.5	32.7	50	10	30	42.7	60
BC*0045MCACZ	ZS29KAE-TF5	208-230/3/60	18.4	114	1	3.5	26.5	40	10	30	37.5	50
BC*0045MDACZ	ZS29KAE-TFD	460/3/60	8.4	58	1	1.9	15	20	9	23	28.8	30
BC*0050MBACZ	ZS33KAE-PFV	208-230/1/60	23	146	1	3.5	32.3	50	10	30	42.3	60
BC*0050MCACZ	ZS33KAE-TF5	208-230/3/60	20	114	1	3.5	28.5	45	10	30	38.5	50
BC*0050MDACZ	ZS33KAE-TFD	460/3/60	9	52	1	1.9	15	20	9	23	28.8	30
BC*0055MBACZ	ZS38K4E-PFV	208-230/1/60	28.5	169	1	3.5	39.2	60	10	30	49.2	60
BC*0055MCACZ	ZS38K4E-TF5	208-230/3/60	19.2	123	1	3.5	27.5	45	10	30	37.5	50
BC*0055MDACZ	ZS38K4E-TFD	460/3/60	8.7	62	1	1.9	15	20	9	23	28.8	30
BC*0060MCACZ	ZS45K4E-TF5	208-230/3/60	21.5	156	1	3.5	30.3	50	10	30	40.3	60
BC*0060MDACZ	ZS45K4E-TFD	460/3/60	8.3	75	1	1.9	15	20	9	23	28.8	30

Notes:
* H = Outdoor, N = Indoor
b. Power supplied by customer
c. Per UL and NEC, RLA values have been calculated by dividing the Maximum Continuous Current (MCC) by 1.56.

INDOOR & OUTDOOR SCROLL CONDENSING UNITS

1/2 - 6 HP AIR-COOLED CONDENSING UNITS

Medium Temperature Models - Scroll Compressors

AWEF DATA – MEDIUM TEMPERATURE

Model	Indoor						Outdoor					
	R-404A/ R-507A	R-448A	R-449A	R-407A	R-407C	R-407F	R-404A/ R-507A	R-448A	R-449A	R-407A	R-407C	R-407F
BC*0005MBACZ	—	—	—	—	—	X	7.6	7.6	7.6	—	7.6	X
BC*0005MCACZ	—	—	—	—	—	X	7.6	7.6	7.6	7.6	7.6	X
BC*0008MBACZ	—	—	—	—	—	X	7.6	7.6	7.6	7.6	7.6	X
BC*0008MCACZ	—	—	—	—	—	X	7.6	7.6	7.6	7.6	7.6	X
BC*0009MBACZ	—	—	—	—	—	X	7.6	7.6	7.6	7.6	7.6	X
BC*0009MCACZ	—	—	—	—	—	X	7.6	7.6	7.6	7.6	7.6	X
BC*0010MBACZ	—	—	—	—	—	X	7.6	7.6	7.6	7.6	7.6	X
BC*0010MCACZ	—	—	—	—	—	X	7.6	7.6	7.6	7.6	7.6	X
BC*0010MDACZ	—	—	—	—	—	X	7.6	7.6	7.6	7.6	7.6	X
BC*0015MBACZ	5.61	—	—	5.61	—	X	7.6	7.6	7.6	7.6	7.6	X
BC*0015MCACZ	5.61	—	—	5.61	—	X	7.6	7.6	7.6	7.6	7.6	X
BC*0015MDACZ	5.61	—	—	5.61	—	X	7.6	7.6	7.6	7.6	7.6	X
BC*0020MBACZ	5.61	—	—	5.61	5.61	X	7.6	7.6	7.6	7.6	7.6	X
BC*0020MCACZ	5.61	5.61	5.61	5.61	5.61	X	7.6	7.6	7.6	7.6	7.6	X
BC*0020MDACZ	5.61	5.61	5.61	5.61	5.61	X	7.6	7.6	7.6	7.6	7.6	X
BC*0025MBACZ	5.61	—	—	5.61	—	X	7.6	7.6	7.6	7.6	7.6	X
BC*0025MCACZ	5.61	—	—	5.61	—	X	7.6	7.6	7.6	7.6	7.6	X
BC*0025MDACZ	5.61	—	—	5.61	—	X	7.6	7.6	7.6	7.6	7.6	X
BC*0030MBACZ	5.61	5.61	5.61	5.61	5.61	X	7.6	7.6	7.6	7.6	7.6	X
BC*0030MCACZ	5.61	5.61	5.61	5.61	5.61	X	7.6	7.6	7.6	7.6	7.6	X
BC*0030MDACZ	5.61	5.61	5.61	5.61	5.61	X	7.6	7.6	7.6	7.6	7.6	X
BC*0035MBACZ	5.61	5.61	5.61	5.61	5.61	X	7.6	7.6	7.6	7.6	7.6	X
BC*0035MCACZ	5.61	5.61	5.61	5.61	5.61	X	7.6	7.6	7.6	7.6	7.6	X
BC*0035MDACZ	5.61	5.61	5.61	5.61	5.61	X	7.6	7.6	7.6	7.6	7.6	X
BC*0045MBACZ	5.61	5.61	5.61	5.61	5.61	X	7.6	7.6	7.6	7.6	7.6	X
BC*0045MCACZ	5.61	5.61	5.61	5.61	5.61	X	7.6	7.6	7.6	7.6	7.6	X
BC*0045MDACZ	5.61	5.61	5.61	5.61	5.61	X	7.6	7.6	7.6	7.6	7.6	X
BC*0050MBACZ	5.61	5.61	5.61	5.61	5.61	X	7.6	7.6	7.6	7.6	7.6	X
BC*0050MCACZ	5.61	5.61	5.61	5.61	5.61	X	7.6	7.6	7.6	7.6	7.6	X
BC*0050MDACZ	5.61	5.61	5.61	5.61	5.61	X	7.6	7.6	7.6	7.6	7.6	X
BC*0055MBACZ	5.61	—	X	—	5.61	X	7.6	—	X	7.6	7.6	X
BC*0055MCACZ	5.61	—	—	—	5.61	X	7.6	7.6	7.6	7.6	7.6	X
BC*0055MDACZ	5.61	—	—	—	5.61	X	7.6	7.6	7.6	7.6	7.6	X
BC*0060MCACZ	5.61	—	—	—	5.61	X	7.6	7.6	7.6	7.6	7.6	X
BC*0060MDACZ	5.61	—	—	—	5.61	X	7.6	7.6	7.6	7.6	7.6	X

Notes:
*H = Outdoor, N = Indoor
X = model not suitable for this refrigerant
— = model is not DOE AWEF compliant

C1 Dimensional Drawing

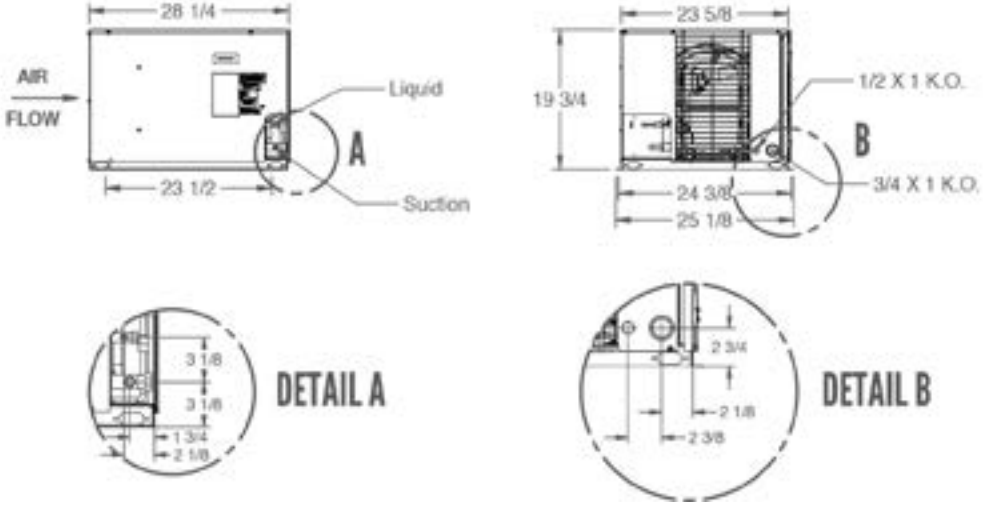

INDOOR & OUTDOOR SCROLL CONDENSING UNITS

1/2 - 6 HP AIR-COOLED CONDENSING UNITS

Low Temperature Models - Scroll Compressors

PERFORMANCE DATA

R-448A/R-449A		Capacity BTUH @ 90°F Ambient by SST								
Model	Compressor	0°F	-5°F	-10°F	-15°F	-20°F	-25°F	-30°F	-35°F	-40°F
BC*0006L^ACZ	ZF03KAE	4,620	4,120	3,680	3,280	2,930	2,610	2,330	2,070	1,830
BC*0008L^ACZ	ZF04KAE	6,240	5,560	4,930	4,340	3,810	3,340	2,930	2,570	2,280
BC*0010L^ACZ	ZF05KAE	7,250	6,480	5,770	5,110	4,490	3,940	3,440	3,000	2,620
BC*0022L^ACZ	ZF07KAE	10,270	9,260	8,330	7,500	6,740	6,030	5,350	4,710	4,070
BC*0025L^ACZ	ZF08K4E	13,370	11,990	10,740	9,590	8,530	7,560	6,680	5,870	5,130
BC*0030L^ACZ	ZF09K4E	14,660	13,180	11,820	10,550	9,370	8,270	7,240	6,260	5,320
BC*0035L^ACZ	ZF11K4E	17,820	16,080	14,460	12,960	11,550	10,270	9,090	8,010	7,010
BC*0045L^ACZ	ZF13K4E	22,270	19,950	17,790	15,790	13,940	12,260	10,730	9,350	8,110
BC*0055L^ACZ	ZF15K4E	26,700	23,950	21,440	19,110	16,980	15,030	13,270	11,670	10,250
BC*0060L^ACZ	ZF18K4E	31,050	28,020	25,200	22,560	20,110	17,860	15,790	13,890	12,140

R-407A/R-407F		Capacity BTUH @ 90°F Ambient by SST								
Model	Compressor	0°F	-5°F	-10°F	-15°F	-20°F	-25°F	-30°F	-35°F	-40°F
BC*0006L^ACZ	ZF03KAE	4,670	4,170	3,720	3,310	2,950	2,630	2,340	2,090	1,860
BC*0008L^ACZ	ZF04KAE	6,350	5,640	4,980	4,380	3,840	3,360	2,940	2,590	2,310
BC*0010L^ACZ	ZF05KAE	7,360	6,560	5,810	5,120	4,480	3,910	3,410	2,980	2,610
BC*0022L^ACZ	ZF07KAE	10,530	9,550	8,620	7,780	6,970	6,210	5,490	4,780	4,080
BC*0025L^ACZ	ZF08K4E	13,690	12,330	11,050	9,840	8,710	7,650	6,680	5,800	4,990
BC*0030L^ACZ	ZF09K4E	14,900	13,580	12,260	10,930	9,640	8,440	7,360	6,440	5,730
BC*0035L^ACZ	ZF11K4E	18,010	16,490	14,920	13,320	11,770	10,300	8,980	7,860	6,990
BC*0045L^ACZ	ZF13K4E	22,420	20,090	17,870	15,780	13,840	12,090	10,560	9,260	8,250
BC*0055L^ACZ	ZF15K4E	27,000	24,170	21,540	19,080	16,830	14,810	13,060	11,590	10,430
BC*0060L^ACZ	ZF18K4E	31,670	28,520	25,520	22,650	20,010	17,620	15,530	13,750	12,330

R-407C		Capacity BTUH @ 90°F Ambient by SST								
Model	Compressor	0°F	-5°F	-10°F	-15°F	-20°F	-25°F	-30°F	-35°F	-40°F
BC*0006L^ACZ	ZF03KAE	4,130	3,670	3,260	2,900	2,580	2,310	2,070	1,860	1,670
BC*0008L^ACZ	ZF04KAE	5,600	4,950	4,360	3,820	3,340	2,920	2,560	2,260	2,020
BC*0010L^ACZ	ZF05KAE	6,550	5,810	5,130	4,500	3,930	3,430	2,990	2,610	2,300
BC*0022L^ACZ	ZF07KAE	9,420	8,420	7,560	6,790	6,090	5,440	4,820	4,180	3,500
BC*0025L^ACZ	ZF08K4E	—	—	—	—	—	—	—	—	—
BC*0030L^ACZ	ZF09K4E	13,120	11,920	10,710	9,520	8,380	7,330	6,410	5,630	5,040
BC*0035L^ACZ	ZF11K4E	16,020	14,600	13,140	11,660	10,260	8,960	7,810	6,870	6,200
BC*0045L^ACZ	ZF13K4E	19,420	17,330	15,370	13,520	11,830	10,330	9,030	7,940	7,120
BC*0055L^ACZ	ZF15K4E	23,430	20,950	18,610	16,440	14,450	12,690	11,170	9,930	9,000
BC*0060L^ACZ	ZF18K4E	27,620	24,750	22,070	19,540	17,230	15,160	13,370	11,880	10,740

INDOOR & OUTDOOR SCROLL CONDENSING UNITS

1/2 - 6 HP AIR-COOLED CONDENSING UNITS

Low Temperature Models - Scroll Compressors

UNIT SPECIFICATIONS

Model	Compressor	Refrigerant Line Connections (OD)		Rec. Capacity @90% full (lbs)		Cabinet	Dimensions (In.)			Net Wt.	Sound Data
		Liquid	Suction	Std	Opt		Depth	Width	Height	(lbs.)	dBa[a]
BC*0006L^ACZ	ZF03KAE	3/8	5/8	9	—	C1	28.25	24.625	19.75	169	63
BC*0008L^ACZ	ZF04KAE	3/8	5/8	9	—	C1	28.25	24.625	19.75	171	63
BC*0010L^ACZ	ZF05KAE	3/8	5/8	9	—	C1	28.25	24.625	19.75	172	63
BC*0022L^ACZ	ZF07KAE	3/8	5/8	9	—	C1	28.25	24.625	19.75	173	63
BC*0025L^ACZ	ZF08K4E	1/2	7/8	14	20	C2	28.25	39.125	19.75	230	64
BC*0030L^ACZ	ZF09K4E	1/2	7/8	14	20	C2	28.25	39.125	19.75	230	64
BC*0035L^ACZ	ZF11K4E	1/2	7/8	14	20	C2	28.25	39.125	19.75	232	64
BC*0045L^ACZ	ZF13K4E	1/2	7/8	20	40	C3	30.25	43.875	29.25	317	64
BC*0055L^ACZ	ZF15K4E	1/2	7/8	20	40	C3	30.25	43.875	29.25	323	64
BC*0060L^ACZ	ZF18K4E	1/2	7/8	20	40	C3	30.25	43.875	29.25	327	64

Notes:
* H = Outdoor, N = Indoor
^ B = 208-230/1/60, C = 208-230/3/60, D = 460/3/60
‡ C = Copeland, L = LG
a. Estimated sound pressure values are 10 feet from the unit. For estimating sound pressure from the unit at different distances, deduct the following from the unit values: 20 feet, deduct 6 dBA; for 40 feet, deduct 12

ELECTRICAL DATA

Model	Compressor	Power[d]	Compressor		Condenser		Air Defrost or Remote Controller		Remote Loads			
			RLA[c]	LRA	No. Fans	FLA	MCA	MOPD	Evap. Fan Amps	Defrost Htrs. Amps	Electric Defrost MCA	Electric Defrost MOPD
BC*0006LBACZ	ZF03KAE-PFV	208-230/1/60	5.4	42.3	1	0.5	15	15	5	15	20	20
BC*0006LCACZ	ZF03KAE-TF5	208-230/3/60	3.7	31.7	1	0.5	15	15	5	15	20	20
BC*0008LBACZ	ZF04KAE-PFV	208-230/1/60	6.6	40.3	1	0.5	15	15	5	15	20	20
BC*0008LCACZ	ZF04KAE-TF5	208-230/3/60	6	55.4	1	0.5	15	15	5	15	20	20
BC*0008LDACZ	ZF04KAE-TFD	460/3/60	3	28	1	0.5	15	15	5	15	20	20
BC*0010LBACZ	ZF05KAE-PFV	208-230/1/60	7.8	55	1	0.5	15	15	5	15	20	20
BC*0010LCACZ	ZF05KAE-TF5	208-230/3/60	6.6	58	1	0.5	15	15	5	15	20	20
BC*0010LDACZ	ZF05KAE-TFD	460/3/60	2.9	28	1	0.5	15	15	5	15	20	20
BC*0022LBACZ	ZF07KAE-PFV	208-230/1/60	12.4	75	1	0.5	20	25	5	15	21	30
BC*0022LCACZ	ZF07KAE-TF5	208-230/3/60	7.8	58	1	0.5	15	15	5	15	20	20
BC*0022LDACZ	ZF07KAE-TFD	460/3/60	3.6	28	1	0.5	15	15	5	15	20	20
BC*0025LBACZ	ZF08K4E-PFV	208-230/1/60	14.7	73	2	1	20	30	10	30	37.5	40
BC*0025LCACZ	ZF08K4E-TF5	208-230/3/60	8.7	63	2	1	15	20	9	23	28.8	30
BC*0025LDACZ	ZF08K4E-TFD	460/3/60	4.5	31	2	1	15	15	b	b	15	15
BC*0030LBACZ	ZF09K4E-PFV	208-230/1/60	12.8	88	2	1	20	25	10	30	37.5	40
BC*0030LCACZ	ZF09K4E-TF5	208-230/3/60	9.9	77	2	1	15	20	9	23	28.8	30
BC*0030LDACZ	ZF09K4E-TFD	460/3/60	4.5	39	2	1	15	15	b	b	15	15
BC*0035LBACZ	ZF11K4E-PFV	208-230/1/60	16.3	109	2	1	21.4	35	10	30	37.5	45
BC*0035LCACZ	ZF11K4E-TF5	208-230/3/60	12.2	88	2	1	20	25	9	23	28.8	35
BC*0035LDACZ	ZF11K4E-TFD	460/3/60	5.8	44	2	1	15	15	b	b	15	15
BC*0045LBACZ	ZF13K4E-PFV	208-230/1/60	24	129	1	3.5	33.5	50	10	30	43.5	60
BC*0045LCACZ	ZF13K4E-TF5	208-230/3/60	11.9	99	1	3.5	20	30	10	30	37.5	40
BC*0045LDACZ	ZF13K4E-TFD	460/3/60	6.4	49.5	1	1.9	15	15	9	23	28.8	30
BC*0055LBACZ	ZF15K4E-PFV	208-230/1/60	24.7	169	1	3.5	34.3	50	10	30	44.3	60
BC*0055LCACZ	ZF15K4E-TF5	208-230/3/60	17	123	1	3.5	24.7	40	10	30	37.5	50
BC*0055LDACZ	ZF15K4E-TFD	460/3/60	8.7	62	1	1.9	15	20	9	23	28.8	30
BC*0060LCACZ	ZF18K4E-TF5	208-230/3/60	21.5	156	1	3.5	30.3	50	10	30	40.3	60
BC*0060LDACZ	ZF18K4E-TFD	460/3/60	8	75	1	1.9	15	15	9	23	28.8	30

Notes:
* H = Outdoor, N = Indoor
b. Power supplied by customer
c. Per UL and NEC, RLA values have been calculated by dividing the Maximum Continuous Current (MCC) by 1.56.
d. Unless otherwise noted, model is available for 50 Hz. Consult factory for details.
e. Compressor not rated for 50 Hz operation.

INDOOR & OUTDOOR SCROLL CONDENSING UNITS

1/2 - 6 HP AIR-COOLED CONDENSING UNITS

Low Temperature Models - Scroll Compressors

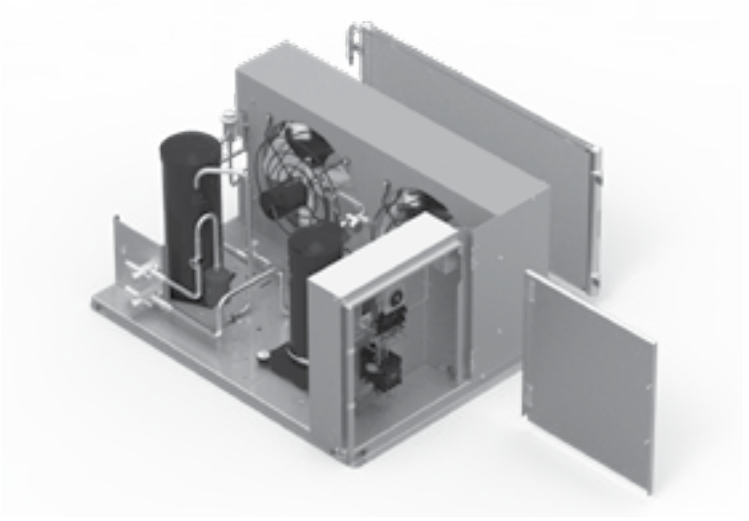

AWEF DATA

Model	Indoor						Outdoor					
	R-404A/ R-507A	R-448A	R-449A	R-407A	R-407C	R-407F	R-404A/ R-507A	R-448A	R-449A	R-407A	R-407C	R-407F
BC*0006LBACZ	2.04	—	—	—	—	2.01	2.88	2.87	2.87	2.87	—	2.87
BC*0006LCACZ	2.04	—	—	—	—	2.01	2.88	2.87	2.87	2.87	—	2.87
BC*0008LBACZ	—	—	—	—	—	—	—	—	—	—	—	—
BC*0008LCACZ	—	—	—	—	—	2.07	2.93	2.91	2.9	2.91	2.89	2.91
BC*0008LDACZ	—	—	—	—	—	2.07	2.93	2.91	2.9	2.91	2.89	2.91
BC*0010LBACZ	2.16	—	—	—	—	—	2.97	2.94	2.94	2.94	2.91	2.94
BC*0010LCACZ	—	—	—	—	—	—	2.97	2.94	2.94	2.94	2.91	2.94
BC*0010LDACZ	—	—	—	—	—	—	2.97	2.94	2.94	2.94	2.91	2.94
BC*0022LBACZ	—	—	—	—	—	—	3.09	3.04	3.04	3.06	3.02	3.07
BC*0022LCACZ	—	—	—	—	—	—	3.09	3.04	3.04	3.06	3.02	3.07
BC*0022LDACZ	—	—	—	—	—	—	3.09	3.04	3.04	3.06	3.02	3.07
BC*0025LBACZ	—	—	—	X	X	X	3.15	3.14	3.13	X	X	X
BC*0025LCACZ	—	—	—	—	X	—	3.15	3.12	3.12	3.13	X	3.14
BC*0025LDACZ	—	—	—	—	X	—	3.15	3.12	3.12	3.13	X	3.14
BC*0030LBACZ	2.4	—	—	—	—	X	3.15	3.15	3.15	3.14	3.1	X
BC*0030LCACZ	2.4	—	—	—	—	—	3.15	3.15	3.15	3.15	3.13	3.15
BC*0030LDACZ	2.4	—	—	—	—	—	3.15	3.15	3.15	3.15	3.13	3.15
BC*0035LBACZ	—	—	—	—	—	X	3.15	3.15	3.15	—	3.15	X
BC*0035LCACZ	2.4	—	—	—	—	—	3.15	3.15	3.15	3.15	3.15	3.15
BC*0035LDACZ	2.4	—	—	—	—	—	3.15	3.15	3.15	3.15	3.15	3.15
BC*0045LBACZ	2.4	—	—	—	2.4	X	3.15	3.15	3.15	3.15	3.15	X
BC*0045LCACZ	2.4	—	—	—	—	2.4	3.15	3.15	3.15	3.15	3.15	3.15
BC*0045LDACZ	2.4	—	—	—	—	2.4	3.15	3.15	3.15	3.15	3.15	3.15
BC*0055LBACZ	2.4	—	—	—	—	X	3.15	3.15	3.15	3.15	3.15	X
BC*0055LCACZ	2.4	—	—	—	—	—	3.15	3.15	3.15	3.15	3.15	3.15
BC*0055LDACZ	2.4	—	—	—	—	—	3.15	3.15	3.15	3.15	3.15	3.15
BC*0060LCACZ	2.4	—	—	—	—	—	3.15	3.15	3.15	3.15	3.15	3.15
BC*0060LDACZ	2.4	—	—	—	—	—	3.15	3.15	3.15	3.15	3.15	3.15

Notes:
*H = Outdoor, N = Indoor
X = model not suitable for this refrigerant
— = model is not DOE AWEF compliant

AIR COOLED CONDENSING UNITS

BOHN 6.5 - 14 HP AIR-COOLED CONDENSING UNITS

NOMENCLATURE

BRAND
B = Bohn

CONDENSING UNIT STYLE
H = Outdoor Horizontal
N = Indoor Horizontal

TEMP RANGE
M = Medium Temperature
L = Low Temperature

REVISION

COMPRESSOR STYLE
D = Discus™
Z = Scroll
X = Bitzer Semi-Hermetic

B	C	H	0030	L	C	A	C	D	A####

PRODUCT IDENTIFIER
C = Condensing Unit

HP

0030 = 3 hp	**0080** = 8 hp
0040 = 4 hp	**0086** = 8.5 hp
0041 = 4 hp	**0090** = 9 hp
0050 = 5 hp	**0091** = 9 hp
0051 = 5 hp	**0100** = 10 hp
0056 = 5.5 hp	**0101** = 10 hp
0060 = 6 hp	**0120** = 12 hp
0061 = 6 hp	**0121** = 12 hp
0062 = 6 hp	**0130** = 13 hp
0065 = 6.5 hp	**0131** = 13 hp
0070 = 7 hp	**0141** = 14 hp
0075 = 7.5 hp	**0150** = 15 hp
0076 = 7.5 hp	**0220** = 22 hp

VOLTAGE
C = 208-230/3/60
D = 460/3/60
E = 575/3/60

COMPRESSOR MANUFACTURER
C = Copeland
B = Bitzer

FACTORY INSTALLED OPTION PACKAGES
A#### = Preferred Option Packages
C#### = A la Carte Options
X#### = Custom Option Packages

STANDARD FEATURES

- ServiceMate™ Diagnostic Module
- Manual Pump Down Switch
- Electronic Oil Failure Switch (Discus™ Compressors Only)
- Fixed Head Pressure Control Valve (C4 & C5 cabinets only)
  - Medium temp - 150 psi
  - Low temp - 100 psi
- Adjustable Head Pressure Control Valve (C6 cabinet only)
- Spring Mounted Compressors with Suction and Discharge Vibration Eliminators (Discus™ and Bitzer Compressors only)
- Crank Case Heater
- Adjustable Low Pressure Control
- Fixed High Pressure Control
- Liquid Line Sight Glass
- Permanent Liquid Line Filter
- Outdoor Painted Cabinet
- Floating Tube™ Design



AIR COOLED CONDENSING UNITS

BOHN 6.5 - 14 HP AIR-COOLED CONDENSING UNITS

Medium Temperature Models - Scroll Compressors

PERFORMANCE DATA

R-404A/R-507A		Capacity BTUH @ 90°F Ambient by SST									
Model	Compressor	+40°F	+35°F	+30°F	+25°F	+20°F	+15°F	+10°F	+5°F	+0°F	-10°F
BC*0065M@ACZ	ZB48KCE	77,170	71,490	66,240	61,130	56,270	51,710	47,250	43,000	39,010	31,710
BC*0070M@ACZ	ZB58K5E	97,540	90,190	83,040	76,350	69,890	63,750	57,930	52,330	46,990	36,810
BC*0075M@ACZ	ZB66K5E	110,080	102,060	94,260	86,900	79,720	72,820	66,510	60,360	54,570	43,810
BC*0086M@ACZ	ZB76K5E	123,580	114,420	105,850	97,690	89,890	82,600	75,480	68,760	62,470	50,390
BC*0100M@ACZ	ZB95K5E	142,810	133,070	123,590	114,100	105,300	96,760	88,420	80,420	72,550	57,420
BC*0141M@ACZ	ZB114K5E	180,210	167,570	154,860	142,890	131,330	120,170	109,580	99,210	89,310	70,820

R-448A/R-449A		Capacity BTUH @ 90°F Ambient by SST									
Model	Compressor	+40°F	+35°F	+30°F	+25°F	+20°F	+15°F	+10°F	+5°F	+0°F	-10°F
BC*0065M@ACZ	ZB48KCE	78,750	72,150	65,840	59,920	54,250	48,990	44,090	39,590	35,490	28,390
BC*0070M@ACZ	ZB58K5E	96,260	87,510	79,120	71,240	63,930	57,190	51,010	45,450	40,490	32,300
BC*0075M@ACZ	ZB66K5E	108,670	99,160	89,840	81,060	72,860	65,370	58,480	52,340	46,930	38,460
BC*0086M@ACZ	ZB76K5E	122,870	112,200	102,050	92,310	83,240	74,870	67,290	60,470	54,460	44,960
BC*0100M@ACZ	ZB95K5E	146,390	133,550	121,290	109,740	99,090	88,870	79,190	69,950	60,840	43,070
BC*0141M@ACZ	ZB114K5E	184,480	167,570	151,530	136,480	122,610	109,520	97,230	85,630	74,580	53,090

R-407A/R-407F		Capacity BTUH @ 90°F Ambient by SST									
Model	Compressor	+40°F	+35°F	+30°F	+25°F	+20°F	+15°F	+10°F	+5°F	+0°F	-10°F
BC*0065M@ACZ	ZB48KCE	78,690	72,600	66,610	60,880	55,240	49,890	44,790	40,010	35,620	27,830
BC*0070M@ACZ	ZB58K5E	96,810	88,720	80,910	73,690	66,900	60,630	54,560	48,660	42,810	30,800
BC*0075M@ACZ	ZB66K5E	109,470	100,600	92,040	83,620	75,530	67,810	60,620	53,840	47,570	36,710
BC*0086M@ACZ	ZB76K5E	125,510	115,590	105,720	96,180	86,680	77,590	68,930	61,020	53,730	41,930
BC*0100M@ACZ	ZB95K5E	143,590	133,110	122,480	111,830	101,300	91,190	81,190	71,730	62,930	48,410
BC*0141M@ACZ	ZB114K5E	182,540	168,040	153,710	139,770	126,400	113,490	101,240	89,780	79,160	61,000

R-407C		Capacity BTUH @ 90°F Ambient by SST									
Model	Compressor	+40°F	+35°F	+30°F	+25°F	+20°F	+15°F	+10°F	+5°F	+0°F	-10°F
BC*0065M@ACZ	ZB48KCE	71,130	65,160	59,300	53,610	48,150	42,820	—	—	—	—
BC*0070M@ACZ	ZB58K5E	90,610	82,250	74,430	67,060	60,330	53,930	48,010	42,400	37,070	—
BC*0075M@ACZ	ZB66K5E	102,960	93,420	84,540	76,210	68,450	61,330	54,690	48,420	42,500	—
BC*0086M@ACZ	ZB76K5E	118,020	107,560	97,670	88,460	79,780	71,780	64,380	57,560	51,300	—
BC*0100M@ACZ	ZB95K5E	138,290	125,810	113,930	102,750	92,270	82,520	73,440	64,780	56,570	—
BC*0141M@ACZ	ZB114K5E	168,890	153,790	139,360	125,770	113,200	101,460	—	—	—	—

Notes:

UNIT SPECIFICATIONS

		Refrigerant Line Connections (OD)		Rec. Capacity @90% full (lbs)			Dimensions (In.)			Net Wt.	Sound Data
Model	Compressor	Liquid	Suction	Std	Opt	Cabinet[h]	Depth	Width	Height	(lbs.)	dBa†
BC*0065M@ACZ	ZB48KCE	1/2	1 1/8	28	52	C4	36.75	51.75	39.25	574	78
BC*0070M@ACZ	ZB58K5E	5/8	1 3/8	67	78	C5	36.75	63.75	39.25	800	80
BC*0075M@ACZ	ZB66K5E	5/8	1 3/8	67	78	C5	36.75	63.75	39.25	813	80
BC*0086M@ACZ	ZB76K5E	5/8	1 3/8	67	78	C5	36.75	63.75	39.25	818	80
BC*0100M@ACZ	ZB95K5E	5/8	1 3/8	67	78	C5	36.75	63.75	39.25	908	82
BC*0141M@ACZ	ZB114K5E	7/8	1 5/8	87	98	C6	41.75	75.125	48.75	1,235	82

Notes:

* H = Outdoor, N = Indoor

@ C = 208-230/3/60, D = 460/3/60, E = 575/3/60

† Estimated sound pressure values are 10 feet from the unit. For estimating sound pressure from the unit at different distances, deduct the following from the unit values: 20 feet, deduct 6 dBA; for 40 feet, deduct 12 dBA; for 80 feet, deduct 18 dBA. This data is typical of "free field" conditions for horizontal air cooled condensing units at the outlet of the discharge air. The actual sound measurements may vary depending on the condensing unit installation. Factors such as reflecting walls, background noise and mounting conditions may have a significant influence on this data.

AIR COOLED CONDENSING UNITS

BOHN 6.5 - 14 HP AIR-COOLED CONDENSING UNITS

Medium Temperature Models - Scroll Compressors

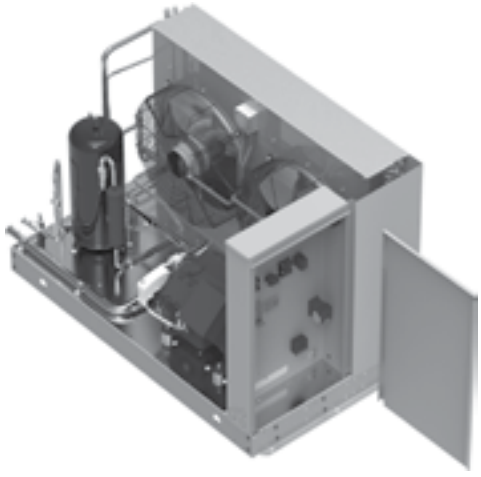

ELECTRICAL DATA

Model	Compressor	Power†	Compressor		Condenser		intelliGen™/ Beacon II		Remote Loads- Low Amps				Remote Loads- High Amps			
									Evap. Fan Amps	Defrost Htrs. Amps‡	Electric Defrost		Evap. Fan Amps	Defrost Htrs. Amps‡	Electric Defrost	
			RLAε	LRA	No. Fans	FLA (ea)	MCA	MOPD			MCA	MOPD			MCA	MOPD
BC*0065MCACZ	ZB48KCE-TF5	208-230/3/60	22.8	164	1	2.7	31.1	50	—	—	—	—	15	40 (1)	50	60
BC*0065MDACZ	ZB48KCE-TFD	460/3/60	12.2	100	1	1.9	20	25	—	—	—	—	8	20 (1)	25.2	35
BC*0065MEACZ[1,2]	ZB48KCE-TFE	575/3/60	9	78	1	1.2	15	20	—	—	—	—	6.4	16 (1)	20	25
BC*0070MCACZ	ZB58K5E-TFC	208-230/3/60	30.8	195	2	2.7	43.9	70	—	—	—	—	20	48 (1)	63.9	90
BC*0070MDACZ	ZB58K5E-TFD	460/3/60	16	95	2	1.9	23.8	35	—	—	—	—	10	25 (1)	33.8	45
BC*0070MEACZ[1]	ZB58K5E-TFE	575/3/60	12.2	80	2	1.2	20	25	—	—	—	—	8	20 (1)	25.6	35
BC*0075MCACZ	ZB66K5E-TFC	208-230/3/60	35.3	225	2	2.7	49.5	80	—	—	—	—	20	48 (1)	69.5	100
BC*0075MDACZ	ZB66K5E-TFD	460/3/60	15.4	114	2	1.9	23	35	—	—	—	—	10	25 (1)	33	45
BC*0075MEACZ[1]	ZB66K5E-TFE	575/3/60	12.8	80	2	1.2	20	30	—	—	—	—	8	20 (1)	26.4	35
BC*0086MCACZ	ZB76K5E-TFC	208-230/3/60	38.6	239	2	2.7	53.6	90	—	—	—	—	20	70 (2)	87.5	110
BC*0086MDACZ	ZB76K5E-TFD	460/3/60	18.6	125	2	1.9	27	45	—	—	—	—	13	35 (1)	43.8	50
BC*0086MEACZ[1]	ZB76K5E-TFE	575/3/60	13.1	80	2	1.2	20	30	–	—	—	—	10.4	28 (1)	35	40
BC*0100MCACZ	ZB95K5E-TWC	208-230/3/60	47.4	298	2	2.7	64.7	110	—	—	—	—	20	70 (2)	87.5	125
BC*0100MDACZ	ZB95K5E-TFD	460/3/60	21.8	150	2	1.9	31	50	—	—	—	—	13	35 (1)	44	60
BC*0100MEACZ[1]	ZB95K5E-TFE	575/3/60	18.7	123	2	1.2	25.7	40	—	—	—	—	10.4	28 (1)	36.1	50
BC*0141MCACZ[3]	ZB114K5E-TWC	208-230/3/60	56.5	321	2	4.4	79.5	125	15	70(2)	94.5	150	20	80 (2)	100	150
BC*0141MDACZ[3]	ZB114K5E-TFD	460/3/60	24.4	179	2	2.2	34.8	50	15	40(1)	50	70	15	60 (2)	75	80
BC*0141MEACZ[1]	ZB114K5E-TWE	575/3/60	20.1	132	2	1.8	28.8	45	12	32(1)	40.8	60	12	48 (1)	60	60

Notes:
* H = Outdoor, N = Indoor
Per UL and NEC, RLA values have been calculated by dividing the Maximum Continuous Current (MCC) by 1.56.
† Unless otherwise noted, model is available for 50 Hz. Consult factory for details.
‡ = Number of defrost heater contactors in parentheses
[1] R407F not available in 575/3/60.
[2] R407C not available in 575/3/60.
[3] R407C not available in 208-230/3/60 or 460/3/60.

AWEF DATA

Model	Indoor						Outdoor					
	R-404A/ R-507A	R-448A	R-449A	R-407A	R-407C	R-407F	R-404A/ R-507A	R-448A	R-449A	R-407A	R-407C	R-407F
BC*0065MCACZ	—	5.61	5.61	5.61	X	5.61	7.6	7.6	7.6	7.6	X	7.6
BC*0065MDACZ	—	5.61	5.61	5.61	X	5.61	7.6	7.6	7.6	7.6	X	7.6
BC*0065MEACZ	—	5.61	5.61	5.61	X	5.61	7.6	7.6	7.6	7.6	X	7.6
BC*0070MCACZ	5.61	5.61	5.61	—	X	5.61	7.6	7.6	7.6	7.6	X	7.6
BC*0070MDACZ	5.61	5.61	5.61	—	X	5.61	7.6	7.6	7.6	7.6	X	7.6
BC*0070MEACZ	5.61	5.61	5.61	—	X	5.61	7.6	7.6	7.6	7.6	X	7.6
BC*0075MCACZ	5.61	5.61	5.61	5.61	X	5.61	7.6	7.6	7.6	7.6	X	7.6
BC*0075MDACZ	5.61	5.61	5.61	5.61	X	5.61	7.6	7.6	7.6	7.6	X	7.6
BC*0075MEACZ	5.61	5.61	5.61	5.61	X	5.61	7.6	7.6	7.6	7.6	X	7.6
BC*0086MCACZ	—	5.61	5.61	—	5.61	5.61	7.6	7.6	7.6	7.6	7.6	7.6
BC*0086MDACZ	—	5.61	5.61	—	5.61	5.61	7.6	7.6	7.6	7.6	7.6	7.6
BC*0086MEACZ	—	5.61	5.61	—	5.61	5.61	7.6	7.6	7.6	7.6	7.6	7.6
BC*0100MCACZ	—	—	—	—	—	—	7.6	7.6	7.6	7.6	7.6	7.6
BC*0100MDACZ	—	—	—	—	—	—	7.6	7.6	7.6	7.6	7.6	7.6
BC*0100MEACZ	—	—	—	—	—	—	7.6	7.6	7.6	7.6	7.6	7.6
BC*0141MCACZ	—	—	—	—	5.61	—	7.6	7.6	7.6	7.6	7.6	7.6
BC*0141MDACZ	—	—	—	—	5.61	—	7.6	7.6	7.6	7.6	7.6	7.6
BC*0141MEACZ	—	—	—	—	5.61	—	7.6	7.6	7.6	7.6	7.6	7.6

Notes:
*H = Outdoor, N = Indoor
X = model not suitable for this refrigerant
— = model is not DOE AWEF compliant
If model has a numerical value in the table, the following statement applies. "This refrigeration system is designed and certified for use in walk-in cooler applications."

AIR COOLED CONDENSING UNITS

BOHN 6.5 - 14 HP AIR-COOLED CONDENSING UNITS

Low Temperature Models - Scroll Compressors

PERFORMANCE DATA

R-404A/R-507A		Capacity BTUH @ 90°F Ambient by SST								
Model	Compressor	+0°F	-5°F	-10°F	-15°F	-20°F	-25°F	-30°F	-35°F	-40°F
BC*0075L@ACZ	ZF25K4E	42,170	38,520	34,960	31,610	28,460	25,560	22,850	20,350	18,060
BC*0100L@ACZ	ZF34K5E	52,610	48,550	44,450	40,530	36,780	33,240	29,880	26,690	23,670
BC*0130L@ACZ	ZF41K5E	70,440	64,440	58,730	53,360	48,150	43,250	38,600	34,130	29,850
BC*0150L@ACZ	ZF49K5E	79,070	72,190	65,690	59,530	53,680	48,300	43,250	38,430	33,920

R-448A/R-449A		Capacity BTUH @ 90°F Ambient by SST								
Model	Compressor	+0°F	-5°F	-10°F	-15°F	-20°F	-25°F	-30°F	-35°F	-40°F
BC*0075L@ACZ	ZF25K4E	40,360	36,240	32,420	28,870	25,650	22,720	20,090	17,770	15,730
BC*0100L@ACZ	ZF34K5E	51,380	46,450	41,790	37,360	33,220	29,350	25,770	22,410	19,280
BC*0130L@ACZ	ZF41K5E	66,930	60,210	53,960	48,140	42,730	37,720	33,110	28,820	24,840
BC*0150L@ACZ	ZF49K5E	79,680	71,820	64,430	57,440	50,980	44,940	39,430	34,370	29,790

R-407A/R-407F		Capacity BTUH @ 90°F Ambient by SST								
Model	Compressor	+0°F	-5°F	-10°F	-15°F	-20°F	-25°F	-30°F	-35°F	-40°F
BC*0075L@ACZ	ZF25K4E	40,540	36,530	32,690	29,060	25,710	22,680	20,000	17,720	15,920
BC*0100L@ACZ	ZF34K5E	50,640	45,740	41,010	36,500	32,250	28,410	25,010	22,080	19,710
BC*0130L@ACZ	ZF41K5E	64,250	57,740	51,630	45,840	40,450	35,570	31,270	27,590	24,590
BC*0150L@ACZ	ZF49K5E	77,330	69,510	62,070	54,980	48,490	42,590	37,470	33,150	29,820

R-407C		Capacity BTUH @ 90°F Ambient by SST								
Model	Compressor	+0°F	-5°F	-10°F	-15°F	-20°F	-25°F	-30°F	-35°F	-40°F
BC*0075L@ACZ	ZF25K4E	35,540	31,870	28,370	25,120	22,110	19,440	17,140	15,250	13,840
BC*0100L@ACZ	ZF34K5E	48,670	43,870	39,370	35,140	31,230	27,620	24,370	21,370	18,660
BC*0130L@ACZ	ZF41K5E	63,520	56,880	50,790	45,090	39,900	35,150	30,850	26,960	23,460
BC*0150L@ACZ	ZF49K5E	72,880	65,250	57,970	51,150	44,920	39,330	34,590	30,790	28,020

Notes:
* H = Outdoor, N = Indoor
@ C = 208-230/3/60, D = 460/3/60, E = 575/3/60
† Estimated sound pressure values are 10 feet from the unit. For estimating sound pressure from the unit at different distances, deduct the following from the unit values: 20 feet, deduct 6 dBA; for 40 feet, deduct 12 dBA; for 80 feet, deduct 18 dBA. This data is typical of "free field" conditions for horizontal air cooled condensing units at the outlet of the discharge air. The actual sound measurements may vary depending on the condensing unit installation. Factors such as reflecting walls, background noise and mounting condi-

UNIT SPECIFICATIONS

		Refrigerant Line Connections (OD)		Rec. Capacity @90% full (lbs)			Dimensions (In.)			Net Wt.	Sound Data
Model	Compressor	Liquid	Suction	Std	Opt	Cabinet[h]	Depth	Width	Height	(lbs.)	dBa†
BC*0075L@ACZ	ZF25K4E	1/2	1 1/8	28	52	C4	36.75	51.75	39.25	671	82
BC*0100L@ACZ	ZF34K5E	1/2	1 1/8	28	52	C4	36.75	51.75	39.25	671	82
BC*0130L@ACZ	ZF41K5E	5/8	1 3/8	67	78	C5	36.75	63.75	39.25	910	84
BC*0150L@ACZ	ZF49K5E	5/8	1 3/8	67	78	C5	36.75	63.75	39.25	891	83

Notes:
* H = Outdoor, N = Indoor
@ C = 208-230/3/60, D = 460/3/60, E = 575/3/60
† Estimated sound pressure values are 10 feet from the unit. For estimating sound pressure from the unit at different distances, deduct the following from the unit values: 20 feet, deduct 6 dBA; for 40 feet, deduct 12 dBA; for 80 feet, deduct 18 dBA. This data is typical of "free field" conditions for horizontal air cooled condensing units at the outlet of the discharge air. The actual sound measurements may vary depending on the condensing unit installation. Factors such as reflecting walls, background noise and mounting condi-
tions may have a significant influence on this data.

BOHN 6.5 - 14 HP AIR-COOLED CONDENSING UNITS

Low Temperature Models - Scroll Compressors

PERFORMANCE DATA

R-404A/R-507A		Capacity BTUH @ 90°F Ambient by SST								
Model	Compressor	+0°F	-5°F	-10°F	-15°F	-20°F	-25°F	-30°F	-35°F	-40°F
BC*0075L@ACZ	ZF25K4E	42,170	38,520	34,960	31,610	28,460	25,560	22,850	20,350	18,060
BC*0100L@ACZ	ZF34K5E	52,610	48,550	44,450	40,530	36,780	33,240	29,880	26,690	23,670
BC*0130L@ACZ	ZF41K5E	70,440	64,440	58,730	53,360	48,150	43,250	38,600	34,130	29,850
BC*0150L@ACZ	ZF49K5E	79,070	72,190	65,690	59,530	53,680	48,300	43,250	38,430	33,920

R-448A/R-449A		Capacity BTUH @ 90°F Ambient by SST								
Model	Compressor	+0°F	-5°F	-10°F	-15°F	-20°F	-25°F	-30°F	-35°F	-40°F
BC*0075L@ACZ	ZF25K4E	40,360	36,240	32,420	28,870	25,650	22,720	20,090	17,770	15,730
BC*0100L@ACZ	ZF34K5E	51,380	46,450	41,790	37,360	33,220	29,350	25,770	22,410	19,280
BC*0130L@ACZ	ZF41K5E	66,930	60,210	53,960	48,140	42,730	37,720	33,110	28,820	24,840
BC*0150L@ACZ	ZF49K5E	79,680	71,820	64,430	57,440	50,980	44,940	39,430	34,370	29,790

R-407A/R-407F		Capacity BTUH @ 90°F Ambient by SST								
Model	Compressor	+0°F	-5°F	-10°F	-15°F	-20°F	-25°F	-30°F	-35°F	-40°F
BC*0075L@ACZ	ZF25K4E	40,540	36,530	32,690	29,060	25,710	22,680	20,000	17,720	15,920
BC*0100L@ACZ	ZF34K5E	50,640	45,740	41,010	36,500	32,250	28,410	25,010	22,080	19,710
BC*0130L@ACZ	ZF41K5E	64,250	57,740	51,630	45,840	40,450	35,570	31,270	27,590	24,590
BC*0150L@ACZ	ZF49K5E	77,330	69,510	62,070	54,980	48,490	42,590	37,470	33,150	29,820

R-407C		Capacity BTUH @ 90°F Ambient by SST								
Model	Compressor	+0°F	-5°F	-10°F	-15°F	-20°F	-25°F	-30°F	-35°F	-40°F
BC*0075L@ACZ	ZF25K4E	35,540	31,870	28,370	25,120	22,110	19,440	17,140	15,250	13,840
BC*0100L@ACZ	ZF34K5E	48,670	43,870	39,370	35,140	31,230	27,620	24,370	21,370	18,660
BC*0130L@ACZ	ZF41K5E	63,520	56,880	50,790	45,090	39,900	35,150	30,850	26,960	23,460
BC*0150L@ACZ	ZF49K5E	72,880	65,250	57,970	51,150	44,920	39,330	34,590	30,790	28,020

Notes:
* H = Outdoor, N = Indoor
@ C = 208-230/3/60, D = 460/3/60, E = 575/3/60
† Estimated sound pressure values are 10 feet from the unit. For estimating sound pressure from the unit at different distances, deduct the following from the unit values: 20 feet, deduct 6 dBA; for 40 feet, deduct 12 dBA; for 80 feet, deduct 18 dBA. This data is typical of "free field" conditions for horizontal air cooled condensing units at the outlet of the discharge air. The actual sound measurements may vary depending on the condensing unit installation. Factors such as reflecting walls, background noise and mounting condi-

UNIT SPECIFICATIONS

		Refrigerant Line Connections (OD)		Rec. Capacity @90% full (lbs)			Dimensions (In.)			Net Wt.	Sound Data
Model	Compressor	Liquid	Suction	Std	Opt	Cabinet[h]	Depth	Width	Height	(lbs.)	dBa†
BC*0075L@ACZ	ZF25K4E	1/2	1 1/8	28	52	C4	36.75	51.75	39.25	671	82
BC*0100L@ACZ	ZF34K5E	1/2	1 1/8	28	52	C4	36.75	51.75	39.25	671	82
BC*0130L@ACZ	ZF41K5E	5/8	1 3/8	67	78	C5	36.75	63.75	39.25	910	84
BC*0150L@ACZ	ZF49K5E	5/8	1 3/8	67	78	C5	36.75	63.75	39.25	891	83

Notes:
* H = Outdoor, N = Indoor
@ C = 208-230/3/60, D = 460/3/60, E = 575/3/60
† Estimated sound pressure values are 10 feet from the unit. For estimating sound pressure from the unit at different distances, deduct the following from the unit values: 20 feet, deduct 6 dBA; for 40 feet, deduct 12 dBA; for 80 feet, deduct 18 dBA. This data is typical of "free field" conditions for horizontal air cooled condensing units at the outlet of the discharge air. The actual sound measurements may vary depending on the condensing unit installation. Factors such as reflecting walls, background noise and mounting condi-
tions may have a significant influence on this data.

AIR COOLED CONDENSING UNITS

BOHN 6.5 - 14 HP AIR-COOLED CONDENSING UNITS

Low Temperature Models - Scroll Compressors

ELECTRICAL DATA

Model	Compressor	Power†	Compressor		Condenser		intelliGen™/ Beacon II		Remote Loads- Low Amps				Remote Loads- High Amps			
			RLA·	LRA	No. Fans	FLA (ea)	MCA	MOPD	Evap. Fan Amps	Defrost Htrs. Amps	Electric Defrost MCA	Electric Defrost MOPD	Evap. Fan Amps	Defrost Htrs. Amps‡	Electric Defrost MCA	Electric Defrost MOPD
BC*0075LCACZ	ZF25K4E-TF5	208-230/3/60	24	224	1	2.7	32.7	50	—	—	—	—	20	60 (2)	75	80
BC*0075LDACZ	ZF25K4E-TFD	460/3/60	10.6	99	1	1.9	20	25	—	—	—	—	10	30 (1)	37.5	40
BC*0075LEACZ	ZF25K4E-TFE	575/3/60	8.1	82.4	1	1.2	15	15	—	—	—	—	8	24 (1)	30	30
BC*0100LCACZ3	ZF34K5E-TFC	208-230/3/60	33.3	239	1	2.7	44.4	70	—	—	—	—	20	60 (2)	75	90
BC*0100LDACZ	ZF34K5E-TFD	460/3/60	16	100	1	1.9	21.9	35	—	—	—	—	10	30 (1)	37.5	45
BC*0100LEACZ1	ZF34K5E-TFE	575/3/60	12.8	100	1	1.2	20	30	—	—	—	—	8	24 (1)	30	35
BC*0130LCACZ	ZF41K5E-TFC	208-230/3/60	37.8	248	2	2.7	52.7	90	—	—	—	—	20	70 (2)	87.5	110
BC*0130LDACZ	ZF41K5E-TFD	460/3/60	17.3	125	2	1.9	25.4	40	—	—	—	—	13	35 (1)	43.8	50
BC*0130LEACZ	ZF41K5E-TFE	575/3/60	14	100	2	1.2	20	30	—	—	—	—	10.4	28 (1)	35	40
BC*0150LCACZ1	ZF49K5E-TFC	208-230/3/60	45.5	338.7	2	2.7	62.3	100	—	—	—	—	20	70 (2)	87.5	125
BC*0150LDACZ	ZF49K5E-TFD	460/3/60	18.1	139	2	1.9	26.5	40	—	—	—	—	13	35 (1)	43.8	50
BC*0150LEACZ1	ZF49K5E-TFE	575/3/60	16.3	123	2	1.2	22.8	35	–	—	—	—	10.4	28 (1)	35	45

Notes:
* H = Outdoor, N = Indoor
Per UL and NEC, RLA values have been calculated by dividing the Maximum Continuous Current (MCC) by 1.56.
† Unless otherwise noted, model is available for 50 Hz. Consult factory for details.
‡ = Number of defrost heater contactors in parentheses
·R407F not available in 575/3/60.
·R407C not available in 575/3/60.
·R407C not available in 208-230/3/60 or 460/3/60.

AWEF DATA

Model	Indoor						Outdoor					
	R-404A/ R-507A	R-448A	R-449A	R-407A	R-407C	R-407F	R-404A/ R-507A	R-448A	R-449A	R-407A	R-407C	R-407F
BC*0075LCACZ	2.4	—	—	—	—	—	3.15	3.15	3.15	3.15	3.15	3.15
BC*0075LDACZ	2.4	—	—	—	—	—	3.15	3.15	3.15	3.15	3.15	3.15
BC*0075LEACZ	—	—	—	—	—	—	3.15	3.15	—	—	3.15	3.15
BC*0100LCACZ	—	—	—	—	—	—	3.15	3.15	3.15	—	—	3.15
BC*0100LDACZ	—	—	—	—	—	—	3.15	3.15	3.15	—	—	3.15
BC*0100LEACZ	—	—	—	—	—	—	3.15	3.15	3.15	—	—	3.15
BC*0130LCACZ	2.4	2.4	2.4	—	—	—	3.15	3.15	3.15	—	3.15	3.15
BC*0130LDACZ	2.4	2.4	2.4	—	—	—	3.15	3.15	3.15	—	3.15	3.15
BC*0130LEACZ	—	2.4	2.4	—	—	—	3.15	3.15	3.15	—	—	3.15
BC*0150LCACZ	—	—	2.4	—	—	—	3.15	3.15	3.15	—	—	3.15
BC*0150LDACZ	—	—	2.4	—	—	—	3.15	3.15	3.15	—	—	3.15
BC*0150LEACZ	—	—	—	—	—	—	3.15	3.15	3.15	—	—	3.15

Notes:
*H = Outdoor, N = Indoor
X = model not suitable for this refrigerant
— = model is not DOE AWEF compliant
If model has a numerical value in the table, the following statement applies. "This refrigeration system is designed and certified for use in walk-in cooler applications."

C4 CABINET

LEFT

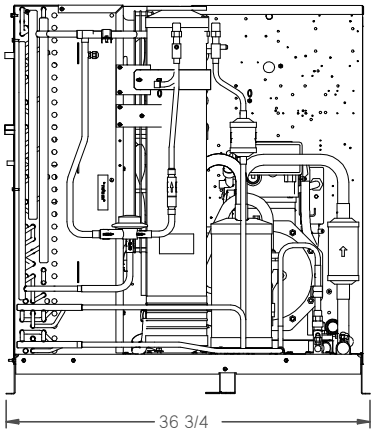

FRONT

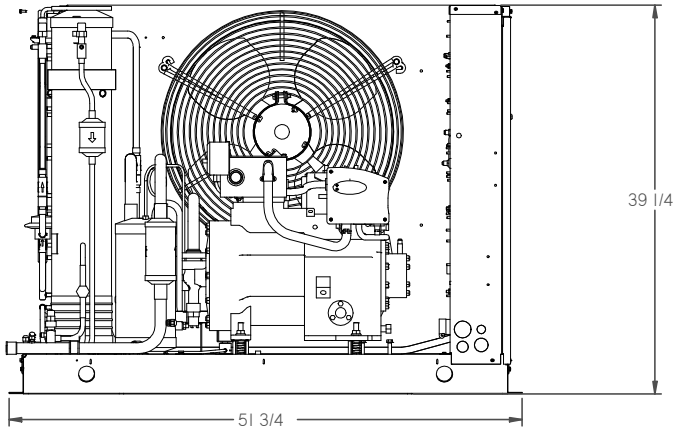

BOHN 6.5 - 14 HP AIR-COOLED CONDENSING UNITS

Medium Temperature Models - Discus™ Compressors

PERFORMANCE DATA

R-404A/R-507A		Capacity BTUH @ 90°F Ambient by SST									
Model	Compressor	+40°F	+35°F	+30°F	+25°F	+20°F	+15°F	+10°F	+5°F	+0°F	-10°F
BC*0050M@ACD	2DC3R53KE	60,650	55,700	50,840	46,270	41,940	37,750	33,860	30,210	26,820	20,890
BC*0051M@ACD	2DD3R63KE	69,020	64,010	58,800	53,620	48,820	44,230	39,810	35,720	31,930	25,270
BC*0075M@ACD	2DL3R78KE	81,700	75,800	70,110	64,340	58,670	53,440	48,450	43,710	39,290	31,270
BC*0076M@ACD	2DA3R89KE	101,530	93,490	86,120	78,770	71,990	65,420	59,280	53,490	48,110	38,250
BC*0080M@ACD	3DA3R10ME	118,200	109,220	100,350	92,040	84,200	76,540	69,330	62,450	56,100	44,430
BC*0100M@ACD	3DB3R12ME	133,270	124,030	114,660	105,400	96,850	88,670	80,800	73,300	66,170	52,670
BC*0120M@ACD	3DF3R15ME	153,030	142,480	132,770	123,400	113,810	104,640	95,640	87,180	79,020	63,780
BC*0150M@ACD	3DS3R17ME	184,960	171,910	159,010	146,210	134,330	122,900	111,960	101,600	91,680	73,230

R-448A/R-449A		Capacity BTUH @ 90°F Ambient by SST									
Model	Compressor	+40°F	+35°F	+30°F	+25°F	+20°F	+15°F	+10°F	+5°F	+0°F	-10°F
BC*0050M@ACD	2DC3R53KE	60,640	55,060	49,740	44,780	40,050	35,750	31,770	28,190	24,940	19,460
BC*0051M@ACD	2DD3R63KE	68,070	62,120	56,390	50,940	45,890	41,110	36,750	32,730	29,150	23,280
BC*0075M@ACD	2DL3R78KE	83,020	76,130	69,580	63,380	57,540	52,140	46,930	41,980	37,290	28,290
BC*0076M@ACD	2DA3R89KE	100,200	91,440	83,200	75,180	67,550	60,630	53,980	47,900	42,350	32,640
BC*0080M@ACD	3DA3R10ME	119,190	109,550	100,040	90,900	81,920	73,340	65,310	57,790	50,940	39,130
BC*0100M@ACD	3DB3R12ME	135,650	125,280	115,000	104,920	95,110	85,840	76,820	68,400	60,530	47,080
BC*0120M@ACD	3DF3R15ME	152,510	141,100	129,740	118,290	107,400	96,880	86,760	77,310	68,390	53,050
BC*0150M@ACD	3DS3R17ME	187,720	173,320	158,990	144,930	131,260	118,240	105,600	93,600	82,440	62,440

R-407A/R-407F		Capacity BTUH @ 90°F Ambient by SST									
Model	Compressor	+40°F	+35°F	+30°F	+25°F	+20°F	+15°F	+10°F	+5°F	+0°F	-10°F
BC*0050M@ACD	2DC3R53KE	61,510	55,840	50,430	45,430	40,600	36,300	32,310	28,740	25,490	19,970
BC*0051M@ACD	2DD3R63KE	69,070	62,720	56,950	51,480	46,440	41,660	37,280	33,290	29,720	23,830
BC*0075M@ACD	2DL3R78KE	83,660	76,600	69,730	63,420	57,490	52,060	46,880	42,120	37,890	30,440
BC*0076M@ACD	2DA3R89KE	101,470	92,620	84,110	76,210	68,650	61,680	55,100	49,050	43,510	33,610
BC*0080M@ACD	3DA3R10ME	120,960	110,860	101,140	91,870	83,220	74,930	67,240	59,960	53,350	41,340
BC*0100M@ACD	3DB3R12ME	137,510	126,310	115,860	105,810	96,220	87,160	78,670	70,560	62,960	49,410
BC*0120M@ACD	3DF3R15ME	152,510	140,890	129,520	118,480	107,610	97,570	88,020	79,010	70,770	55,990
BC*0150M@ACD	3DS3R17ME	186,520	171,360	157,130	143,430	130,330	117,860	106,210	95,060	84,550	65,380

R-407C		Capacity BTUH @ 90°F Ambient by SST									
Model	Compressor	+40°F	+35°F	+30°F	+25°F	+20°F	+15°F	+10°F	+5°F	+0°F	-10°F
BC*0050M@ACD	2DC3R53KE	57,780	51,970	46,480	41,390	36,630	32,380	28,510	25,040	22,020	17,290
BC*0051M@ACD	2DD3R63KE	65,540	58,940	52,830	47,140	41,950	37,130	32,870	29,080	25,770	20,550
BC*0075M@ACD	2DL3R78KE	79,980	72,320	65,210	58,530	52,340	46,730	41,530	36,880	32,800	26,300
BC*0076M@ACD	2DA3R89KE	95,180	86,060	77,480	69,300	61,730	54,710	48,400	42,670	37,510	29,010
BC*0080M@ACD	3DA3R10ME	111,190	101,710	92,460	83,570	75,140	67,170	59,670	52,760	46,370	35,480
BC*0100M@ACD	3DB3R12ME	128,190	117,670	107,230	97,360	87,910	78,960	70,560	62,630	55,430	42,750
BC*0120M@ACD	3DF3R15ME	144,160	132,710	121,330	110,250	99,550	89,240	79,660	70,740	62,620	48,580
BC*0150M@ACD	3DS3R17ME	172,680	158,620	144,820	131,450	118,640	106,580	95,020	84,170	74,130	56,110

Notes:

* H = Outdoor, N = Indoor

@ C = 208-230/3/60, D = 460/3/60, E = 575/3/60

† Estimated sound pressure values are 10 feet from the unit. For estimating sound pressure from the unit at different distances, deduct the following from the unit values: 20 feet, deduct 6 dBA; for 40 feet, deduct 12 dBA; for 80 feet, deduct 18 dBA. This data is typical of "free field" conditions for horizontal air cooled condensing units at the outlet of the discharge air. The actual sound measurements may vary depending on the condensing unit installation. Factors such as reflecting walls, background noise and mounting conditions may have a significant influence on this data.

AIR COOLED CONDENSING UNITS

BOHN 6.5 - 14 HP AIR-COOLED CONDENSING UNITS

Medium Temperature Models - Discus™ Compressors

UNIT SPECIFICATIONS

Model	Compressor	Refrigerant Line Connections (OD)		Rec. Capacity @90% full (lbs)		Cabinet	Dimensions (In.)			Net Wt.	Sound Data
		Liquid	Suction	Std	Opt		Depth	Width	Height	(lbs.)	dBa†
BC*0050M@ACD	2DC3R53KE	1/2	1 1/8	28	52	C4	36.75	51.75	39.25	751	78
BC*0051M@ACD	2DD3R63KE	1/2	1 1/8	28	52	C4	36.75	51.75	39.25	751	78
BC*0075M@ACD	2DL3R78KE	1/2	1 1/8	28	52	C4	36.75	51.75	39.25	761	78
BC*0076M@ACD	2DA3R89KE	5/8	1 3/8	67	78	C5	36.75	63.75	39.25	985	82
BC*0080M@ACD	3DA3R10ME	5/8	1 3/8	67	78	C5	36.75	63.75	39.25	1,020	82
BC*0100M@ACD	3DB3R12ME	5/8	1 3/8	67	78	C5	36.75	63.75	39.25	1,045	82
BC*0120M@ACD	3DF3R15ME	5/8	1 3/8	67	78	C5	36.75	63.75	39.25	1,065	82
BC*0150M@ACD	3DS3R17ME	7/8	1 5/8	87	98	C6	41.75	75.125	48.75	1,182	81

Notes:
* H = Outdoor, N = Indoor
@ C = 208-230/3/60, D = 460/3/60, E = 575/3/60
† Estimated sound pressure values are 10 feet from the unit. For estimating sound pressure from the unit at different distances, deduct the following from the unit values: 20 feet, deduct 6 dBA; for 40 feet, deduct 12 dBA; for 80 feet, deduct 18 dBA. This data is typical of "free field" conditions
for horizontal air cooled condensing units at the outlet of the discharge air. The actual sound measurements may vary depending on the condensing
unit installation. Factors such as reflecting walls, background noise and mounting conditions may have a significant influence on this data.

ELECTRICAL DATA

Model	Compressor	Power†	Compressor		Condenser		intelliGen™/ Beacon II		Remote Loads- Low Amps^				Remote Loads- High Amps^			
									Evap. Fan Amps	Defrost Htrs. Amps‡	Electric Defrost		Evap. Fan Amps	Defrost Htrs. Amps‡	Electric Defrost	
			RLA	LRA	No. Fans	FLA (ea)	MCA	MOPD			MCA	MOPD			MCA	MOPD
BC*0050MCACD	2DC3R53KE-TFC	208-230/3/60	20	120	1	2.7	27.7	45	—	—	—	—	15	40(1)	50	60
BC*0050MDACD	2DC3R53KE-TFD	460/3/60	9.4	60	1	1.9	15	20	—	—	—	—	8	20(1)	25	30
BC*0050MEACD	2DC3R53KE-TFE	575/3/60	6.9	49	1	1.2	15	15	—	—	—	—	6.4	16(1)	20	20
BC*0051MCACD	2DD3R63KE-TFC	208-230/3/60	20	120	1	2.7	27.7	45	—	—	—	—	15	40(1)	50	60
BC*0051MDACD	2DD3R63KE-TFD	460/3/60	9.4	60	1	1.9	15	20	—	—	—	—	8	20(1)	25	30
BC*0051MEACD	2DD3R63KE-TFE	575/3/60	7.1	49	1	1.2	15	15	—	—	—	—	6.4	16(1)	20	20
BC*0075MCACD	2DL3R78KE-TFC	208-230/3/60	28.3	169	1	2.7	38.1	60	—	—	—	—	20	48(1)	60	80
BC*0075MDACD	2DL3R78KE-TFD	460/3/60	12.4	85	1	1.9	20	25	—	—	—	—	10	25(1)	31.3	35
BC*0075MEACD	2DL3R78KE-TFE	575/3/60	11.9	67	1	1.2	20	25	—	—	—	—	8	20(1)	25	35
BC*0076MCACD	2DA3R89KE-TFC	208-230/3/60	28.7	169	2	2.7	41.3	70	—	—	—	—	20	48(1)	61.3	90
BC*0076MDACD	2DA3R89KE-TFD	460/3/60	12.6	85	2	1.9	20	30	—	—	—	—	10	25(1)	31.3	40
BC*0076MEACD	2DA3R89KE-TFE	575/3/60	11.9	67	2	1.2	20	25	–	—	—	—	8	20(1)	25.3	35
BC*0080MCACD	3DA3R10ME-TFC	208-230/3/60	36.8	215	2	2.7	51.4	80	—	—	—	—	20	70(2)	87.5	100
BC*0080MDACD	3DA3R10ME-TFD	460/3/60	17.9	106	2	1.9	26.2	40	—	—	—	—	13	35(1)	43.8	50
BC*0080MEACD	3DA3R10ME-TFE	575/3/60	14.7	84	2	1.2	20.8	35	—	—	—	—	10.4	28(1)	35	45
BC*0100MCACD	3DB3R12ME-TFC	208-230/3/60	39.1	215	2	2.7	54.3	90	—	—	—	—	20	70(2)	87.5	110
BC*0100MDACD	3DB3R12ME-TFD	460/3/60	17.9	106	2	1.9	26.2	40	—	—	—	—	13	35(1)	43.8	50
BC*0100MEACD	3DB3R12ME-TFE	575/3/60	14.8	84	2	1.2	20.9	35	—	—	—	—	10.4	28(1)	35	45
BC*0120MCACD	3DF3R15ME-TFC	208-230/3/60	43.2	275	2	2.7	59.4	100	—	—	—	—	20	70(2)	87.5	110
BC*0120MDACD	3DF3R15ME-TFD	460/3/60	21.2	138	2	1.9	30.2	50	—	—	—	—	13	35(1)	43.8	60
BC*0150MCACD	3DS3R17ME-TFC	208-230/3/60	53.5	275	2	4.4	75.7	125	15	70(2)	90.7	125	20	80(2)	100	125
BC*0150MDACD	3DS3R17ME-TFD	460/3/60	26	138	2	2.2	36.9	60	15	40(1)	51.9	70	15	60(2)	75	80
BC*0150MEACD	3DS3R17ME-TFE	575/3/60	21.2	110	2	1.8	30	50	12	32(1)	42	60	12	48(1)	60	60

Notes:
* H = Outdoor, N = Indoor
Per UL and NEC, RLA values have been calculated by dividing the Maximum Continuous Current (MCC) by 1.56.
† Unless otherwise noted, model is available for 50 Hz. Consult factory for details.
‡ = Number of defrost heater contactors in parentheses
^ = Two fan large units have ability for a reduced amp electric defrost kit (low amps). Confirm proper defrost kit prior to ordering or installing.

AIR COOLED CONDENSING UNITS

BOHN 6.5 - 14 HP AIR-COOLED CONDENSING UNITS

Medium Temperature Models - Discus™ Compressors

AWEF DATA

Model	Indoor						Outdoor					
	R-404A/ R-507A	R-448A	R-449A	R-407A	R-407C	R-407F	R-404A/ R-507A	R-448A	R-449A	R-407A	R-407C	R-407F
BC*0050MCACD	5.61	5.61	5.61	5.61	5.61	5.61	7.6	7.6	7.6	7.6	7.6	7.6
BC*0050MDACD	5.61	5.61	5.61	5.61	5.61	5.61	7.6	7.6	7.6	7.6	7.6	7.6
BC*0050MEACD	5.61	5.61	5.61	5.61	5.61	5.61	7.6	7.6	7.6	7.6	7.6	7.6
BC*0051MCACD	5.61	5.61	5.61	5.61	5.61	5.61	7.6	7.6	7.6	7.6	7.6	7.6
BC*0051MDACD	5.61	5.61	5.61	5.61	5.61	5.61	7.6	7.6	7.6	7.6	7.6	7.6
BC*0051MEACD	5.61	5.61	5.61	5.61	5.61	5.61	7.6	7.6	7.6	7.6	7.6	7.6
BC*0075MCACD	5.61	5.61	5.61	5.61	5.61	5.61	7.6	7.6	7.6	7.6	7.6	7.6
BC*0075MDACD	5.61	5.61	5.61	5.61	5.61	5.61	7.6	7.6	7.6	7.6	7.6	7.6
BC*0075MEACD	5.61	5.61	5.61	5.61	5.61	5.61	7.6	7.6	7.6	7.6	7.6	7.6
BC*0076MCACD	5.61	5.61	5.61	5.61	5.61	5.61	7.6	7.6	7.6	7.6	7.6	7.6
BC*0076MDACD	5.61	5.61	5.61	5.61	5.61	5.61	7.6	7.6	7.6	7.6	7.6	7.6
BC*0076MEACD	5.61	5.61	5.61	5.61	5.61	5.61	7.6	7.6	7.6	7.6	7.6	7.6
BC*0080MCACD	5.61	5.61	5.61	5.61	5.61	5.61	7.6	7.6	7.6	7.6	7.6	7.6
BC*0080MDACD	5.61	5.61	5.61	5.61	5.61	5.61	7.6	7.6	7.6	7.6	7.6	7.6
BC*0080MEACD	5.61	5.61	5.61	5.61	5.61	5.61	7.6	7.6	7.6	7.6	7.6	7.6
BC*0100MCACD	5.61	5.61	5.61	5.61	5.61	5.61	7.6	7.6	7.6	7.6	7.6	7.6
BC*0100MDACD	5.61	5.61	5.61	5.61	5.61	5.61	7.6	7.6	7.6	7.6	7.6	7.6
BC*0100MEACD	5.61	5.61	5.61	5.61	5.61	5.61	7.6	7.6	7.6	7.6	7.6	7.6
BC*0120MCACD	—	5.61	5.61	—	5.61	5.61	7.6	7.6	7.6	7.6	7.6	7.6
BC*0120MDACD	—	5.61	5.61	—	5.61	5.61	7.6	7.6	7.6	7.6	7.6	7.6
BC*0120MEACD	X	X	X	X	X	X	X	X	X	X	X	X
BC*0150MCACD	—	5.61	5.61	5.61	5.61	5.61	7.6	7.6	7.6	7.6	7.6	7.6
BC*0150MDACD	—	5.61	5.61	5.61	5.61	5.61	7.6	7.6	7.6	7.6	7.6	7.6
BC*0150MEACD	—	5.61	5.61	5.61	5.61	5.61	7.6	7.6	7.6	7.6	7.6	7.6

Notes:
* H = Outdoor, N = Indoor
X = model not suitable for this refrigerant
— = model is not DOE AWEF compliant
If model has a numerical value in the table, the following statement applies. "This refrigeration system is designed and certified for use in walk-in cooler applications."

C5 CABINET

LEFT

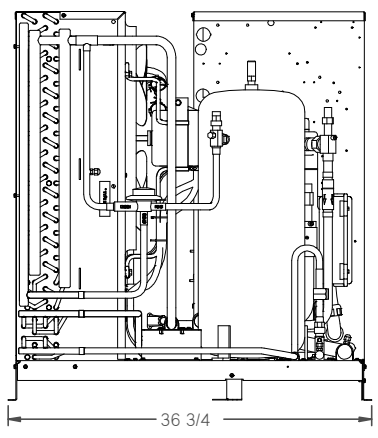

FRONT

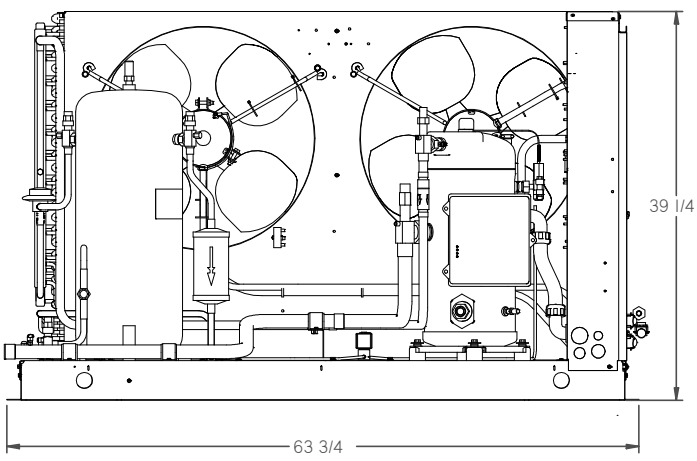

BOHN 6.5 - 14 HP AIR-COOLED CONDENSING UNITS

Low Temperature Models - Discus™ Compressors

PERFORMANCE DATA

R-404A/R-507A		Capacity BTUH @ 90°F Ambient by SST								
Model	Compressor	+0°F	-5°F	-10°F	-15°F	-20°F	-25°F	-30°F	-35°F	-40°F
BC*0030L@ACD	2DF3F16KE	34,720	31,190	27,800	24,530	21,540	18,730	16,130	13,720	11,510
BC*0040L@ACD	2DL3F20KE	38,770	34,970	31,360	27,850	24,530	21,480	18,630	15,980	13,510
BC*0060L@ACD	2DB3F25KE	45,520	41,220	37,200	33,300	29,560	25,950	22,580	19,380	16,370
BC*0061L@ACD	3DA3F28KE	49,930	45,460	41,030	36,820	32,770	28,930	25,280	21,920	18,800
BC*0075L@ACD	3DB3F33KE	58,360	53,100	48,160	43,330	38,720	34,260	30,010	26,050	22,290
BC*0090L@ACD	3DF3F40KE	76,720	69,450	62,360	55,580	49,230	43,330	37,830	32,740	28,080
BC*0100L@ACD	3DS3F46KE	83,270	75,860	68,790	61,820	55,190	48,850	42,980	37,400	32,190
BC*0120L@ACD	4DBNF54KE	97,570	88,280	79,570	71,140	63,290	55,790	48,690	41,680	34,670
BC*0150L@ACD	4DHNF63KE	111,010	100,980	91,410	82,240	73,570	65,200	57,110	49,370	41,700
BC*0220L@ACD	4DJNF76KE	126,430	116,140	105,810	95,900	86,120	76,550	67,260	57,900	48,980

R-448A/R-449A		Capacity BTUH @ 90°F Ambient by SST								
Model	Compressor	+0°F	-5°F	-10°F	-15°F	-20°F	-25°F	-30°F	-35°F	-40°F
BC*0030L@ACD	2DF3F16KE	30,170	26,290	22,820	19,700	16,920	14,420	12,210	10,210	8,370
BC*0040L@ACD	2DL3F20KE	34,930	30,890	27,070	23,430	20,110	17,040	14,280	11,880	9,860
BC*0060L@ACD	2DB3F25KE	41,710	36,860	32,450	28,300	24,570	21,140	17,910	14,780	11,760
BC*0061L@ACD	3DA3F28KE	46,610	41,110	36,090	31,430	27,190	23,350	20,020	17,090	14,540
BC*0075L@ACD	3DB3F33KE	55,730	49,480	43,740	38,510	33,570	29,100	25,030	21,120	17,380
BC*0090L@ACD	3DF3F40KE	72,550	63,930	55,960	48,610	42,040	36,080	30,670	25,750	21,280
BC*0100L@ACD	3DS3F46KE	78,190	68,980	60,530	52,660	45,540	39,090	33,260	27,890	22,990
BC*0120L@ACD	4DBNF54KE	92,720	82,620	72,740	63,340	54,530	46,530	39,210	32,590	26,850
BC*0150L@ACD	4DHNF63KE	103,640	93,150	83,080	73,250	63,950	55,420	47,770	40,940	35,040
BC*0220L@ACD	4DJNF76KE	125,150	111,250	98,440	86,630	75,730	65,580	55,760	46,390	36,730

R-407A/R-407F		Capacity BTUH @ 90°F Ambient by SST								
Model	Compressor	+0°F	-5°F	-10°F	-15°F	-20°F	-25°F	-30°F	-35°F	-40°F
BC*0030L@ACD	2DF3F16KE	30,720	26,810	23,330	20,170	17,340	14,740	12,360	10,140	8,030
BC*0040L@ACD	2DL3F20KE	35,250	31,330	27,510	23,910	20,510	17,350	14,430	11,760	9,410
BC*0060L@ACD	2DB3F25KE	42,080	37,310	32,880	28,770	24,920	21,410	18,150	15,070	12,160
BC*0061L@ACD	3DA3F28KE	46,820	41,470	36,580	31,990	27,690	23,720	20,110	16,630	13,300
BC*0075L@ACD	3DB3F33KE	55,850	49,780	44,160	38,920	34,050	29,410	25,110	20,880	16,660
BC*0090L@ACD	3DF3F40KE	72,680	64,500	56,810	49,500	42,890	36,690	30,930	25,490	20,430
BC*0100L@ACD	3DS3F46KE	77,230	68,550	60,530	53,020	45,900	39,460	33,350	27,510	21,830
BC*0120L@ACD	4DBNF54KE	93,530	83,540	73,940	64,580	55,560	47,270	39,530	32,330	25,840
BC*0150L@ACD	4DHNF63KE	103,910	93,780	83,890	74,320	64,930	56,090	47,880	40,210	33,200
BC*0220L@ACD	4DJNF76KE	117,480	106,250	95,530	85,250	75,540	66,130	57,200	48,330	39,660

R-407C		Capacity BTUH @ 90°F Ambient by SST								
Model	Compressor	+0°F	-5°F	-10°F	-15°F	-20°F	-25°F	-30°F	-35°F	-40°F
BC*0030L@ACD	2DF3F16KE	26,570	23,160	20,110	17,360	14,900	12,710	10,720	8,870	7,100
BC*0040L@ACD	2DL3F20KE	30,760	27,190	23,830	20,660	17,680	14,920	12,430	10,160	8,170
BC*0060L@ACD	2DB3F25KE	37,130	32,760	28,770	25,030	21,650	18,500	15,590	12,910	10,390
BC*0061L@ACD	3DA3F28KE	41,900	36,900	32,290	28,000	24,000	20,330	17,010	13,960	11,260
BC*0075L@ACD	3DB3F33KE	49,790	44,010	38,740	33,800	29,300	25,060	21,240	17,650	14,350
BC*0090L@ACD	3DF3F40KE	64,030	56,580	49,570	42,970	36,740	31,080	25,910	21,220	17,130
BC*0100L@ACD	3DS3F46KE	68,490	60,540	53,000	46,050	39,510	33,510	28,050	22,970	18,380
BC*0120L@ACD	4DBNF54KE	82,720	72,560	63,010	54,310	46,290	39,020	32,490	26,480	21,110
BC*0150L@ACD	4DHNF63KE	92,760	81,950	72,050	62,650	54,240	46,530	39,450	33,040	27,100
BC*0220L@ACD	4DJNF76KE	106,920	94,180	82,860	72,640	63,380	55,020	47,360	39,930	32,610

Notes:

* H = Outdoor, N = Indoor

@ C = 208-230/3/60, D = 460/3/60, E = 575/3/60

† Estimated sound pressure values are 10 feet from the unit. For estimating sound pressure from the unit at different distances, deduct the following from the unit values: 20 feet, deduct 6 dBA; for 40 feet, deduct 12 dBA; for 80 feet, deduct 18 dBA. This data is typical of “free field” conditions for horizontal air cooled condensing units at the outlet of the discharge air. The actual sound measurements may vary depending on the condensing unit installation. Factors such as reflecting walls, background noise and mounting conditions may have a significant influence on this data.

AIR COOLED CONDENSING UNITS

BOHN 6.5 - 14 HP AIR-COOLED CONDENSING UNITS

Low Temperature Models - Discus™ Compressors

UNIT SPECIFICATIONS

Model	Compressor	Refrigerant Line Connections (OD)		Rec. Capacity @90% full (lbs)		Cabinet	Dimensions (In.)			Net Wt.	Sound Data
		Liquid	Suction	Std	Opt		Depth	Width	Height	(lbs.)	dBa†
BC*0030L@ACD	2DF3F16KE	1/2	1 1/8	28	52	C4	36.75	51.75	39.25	737	78
BC*0040L@ACD	2DL3F20KE	1/2	1 1/8	28	52	C4	36.75	51.75	39.25	741	78
BC*0060L@ACD	2DB3F25KE	1/2	1 1/8	28	52	C4	36.75	51.75	39.25	751	78
BC*0061L@ACD	3DA3F28KE	1/2	1 1/8	28	52	C4	36.75	51.75	39.25	781	81
BC*0075L@ACD	3DB3F33KE	1/2	1 1/8	28	52	C4	36.75	51.75	39.25	805	81
BC*0090L@ACD	3DF3F40KE	5/8	1 3/8	67	78	C5	36.75	63.75	39.25	1,030	82
BC*0100L@ACD	3DS3F46KE	5/8	1 3/8	67	78	C5	36.75	63.75	39.25	1,035	82
BC*0120L@ACD	4DBNF54KE	7/8	1 5/8	87	98	C6	41.75	75.125	48.75	1,199	82
BC*0150L@ACD	4DHNF63KE	7/8	1 5/8	87	98	C6	41.75	75.125	48.75	1,234	82
BC*0220L@ACD	4DJNF76KE	7/8	1 5/8	87	98	C6	41.75	75.125	48.75	1,224	82

Notes:
* H = Outdoor, N = Indoor
@ C = 208-230/3/60, D = 460/3/60, E = 575/3/60
† Estimated sound pressure values are 10 feet from the unit. For estimating sound pressure from the unit at different distances, deduct the following from the unit values: 20 feet, deduct 6 dBA; for 40 feet, deduct 12 dBA; for 80 feet, deduct 18 dBA. This data is typical of "free field" conditions
for horizontal air cooled condensing units at the outlet of the discharge air. The actual sound measurements may vary depending on the condensing unit installation. Factors such as reflecting walls, background noise and mounting conditions may have a significant influence on this data.

AWEF DATA

Model	Indoor						Outdoor					
	R-404A/ R-507A	R-448A	R-449A	R-407A	R-407C	R-407F	R-404A/ R-507A	R-448A	R-449A	R-407A	R-407C	R-407F
BC*0030LCACD	2.4	2.4	2.4	2.4	2.4	2.4	3.15	3.15	3.15	3.15	3.15	3.15
BC*0030LDACD	2.4	2.4	2.4	2.4	2.4	2.4	3.15	3.15	3.15	3.15	3.15	3.15
BC*0030LEACD	2.4	2.4	2.4	2.4	2.4	2.4	3.15	3.15	3.15	3.15	3.15	3.15
BC*0040LCACD	2.4	2.4	2.4	2.4	2.4	2.4	3.15	3.15	3.15	3.15	3.15	3.15
BC*0040LDACD	2.4	2.4	2.4	2.4	2.4	2.4	3.15	3.15	3.15	3.15	3.15	3.15
BC*0040LEACD	2.4	2.4	2.4	2.4	2.4	2.4	3.15	3.15	3.15	3.15	3.15	3.15
BC*0060LCACD	2.4	2.4	2.4	2.4	2.4	2.4	3.15	3.15	3.15	3.15	3.15	3.15
BC*0060LDACD	2.4	2.4	2.4	2.4	2.4	2.4	3.15	3.15	3.15	3.15	3.15	3.15
BC*0060LEACD	2.4	2.4	2.4	2.4	2.4	2.4	3.15	3.15	3.15	3.15	3.15	3.15
BC*0061LCACD	2.4	2.4	2.4	—	2.4	2.4	3.15	3.15	3.15	3.15	3.15	3.15
BC*0061LDACD	2.4	2.4	2.4	—	2.4	2.4	3.15	3.15	3.15	3.15	3.15	3.15
BC*0061LEACD	2.4	2.4	2.4	—	2.4	2.4	3.15	3.15	3.15	3.15	3.15	3.15
BC*0075LCACD	2.4	2.4	2.4	2.4	2.4	2.4	3.15	3.15	3.15	3.15	3.15	3.15
BC*0075LDACD	2.4	2.4	2.4	2.4	2.4	2.4	3.15	3.15	3.15	3.15	3.15	3.15
BC*0075LEACD	2.4	2.4	2.4	2.4	2.4	2.4	3.15	3.15	3.15	3.15	3.15	3.15
BC*0090LCACD	2.4	2.4	2.4	2.4	2.4	2.4	3.15	3.15	3.15	3.15	3.15	3.15
BC*0090LDACD	2.4	2.4	2.4	2.4	2.4	2.4	3.15	3.15	3.15	3.15	3.15	3.15
BC*0090LEACD	2.4	2.4	2.4	2.4	2.4	2.4	3.15	3.15	3.15	3.15	3.15	3.15
BC*0100LCACD	2.4	—	—	—	2.4	2.4	3.15	3.15	3.15	3.15	3.15	3.15
BC*0100LDACD	2.4	—	—	—	2.4	2.4	3.15	3.15	3.15	3.15	3.15	3.15
BC*0100LEACD	2.4	—	—	—	2.4	2.4	3.15	3.15	3.15	3.15	3.15	3.15
BC*0120LCACD	—	—	—	—	—	2.4	3.15	3.15	3.15	3.15	3.15	3.15
BC*0120LDACD	—	—	—	—	—	2.4	3.15	3.15	3.15	3.15	3.15	3.15
BC*0120LEACD	—	—	—	—	—	—	—	—	—	—	—	—
BC*0150LCACD	—	—	—	—	—	2.4	3.15	—	—	—	—	3.15
BC*0150LDACD	—	—	—	—	—	2.4	3.15	—	—	—	—	3.15
BC*0150LEACD	—	—	—	—	—	—	—	—	—	—	—	—
BC*0220LCACD	—	—	—	—	—	—	3.15	—	—	—	—	3.15
BC*0220LDACD	—	—	—	—	—	—	3.15	—	—	—	—	3.15
BC*0220LEACD	—	—	—	—	—	—	—	—	—	—	—	—

Notes:
* H = Outdoor, N = Indoor
X = model not suitable for this refrigerant
— = model is not DOE AWEF compliant
If model has a numerical value in the table, the following statement applies. "This refrigeration system is designed and certified for use in walk-in freezer applications."

AIR COOLED CONDENSING UNITS

BOHN 6.5 - 14 HP AIR-COOLED CONDENSING UNITS

Low Temperature Models - Discus™ Compressors

ELECTRICAL DATA

Model	Compressor	Power†	Compressor		Condenser		intelliGen™/ Beacon II		Remote Loads- Low Amps^				Remote Loads- High Amps^			
									Evap. Fan Amps	Defrost Htrs. Amps‡	Electric Defrost		Evap. Fan Amps	Defrost Htrs. Amps‡	Electric Defrost	
			RLA*	LRA	No. Fans	FLA (ea)	MCA	MOPD			MCA	MOPD			MCA	MOPD
BC*0030LCACD	2DF3F16KE-TFC	208-230/3/60	14.4	102	1	2.7	20.6	35	—	—	—	—	15	40(1)	50	50
BC*0030LDACD	2DF3F16KE-TFD	460/3/60	7.1	52	1	1.9	15	15	—	—	—	—	8	20(1)	25	25
BC*0030LEACD	2DF3F16KE-TFE	575/3/60	6	41	1	1.2	15	15	—	—	—	—	6.4	16(1)	20	20
BC*0040LCACD	2DL3F20KE-TFC	208-230/3/60	23.6	161	1	2.7	32.2	50	—	—	—	—	15	48(1)	60	70
BC*0040LDACD	2DL3F20KE-TFD	460/3/60	9.2	60	1	1.9	15	20	—	—	—	—	8	25(1)	31.3	35
BC*0040LEACD	2DL3F20KE-TFE	575/3/60	6.9	49	1	1.2	15	15	—	—	—	—	6.4	20(1)	25	25
BC*0060LCACD	2DB3F25KE-TFC	208-230/3/60	25.3	161	1	2.7	34.4	50	—	—	—	—	20	60(2)	75	80
BC*0060LDACD	2DB3F25KE-TFD	460/3/60	11.9	80	1	1.9	20	25	—	—	—	—	10	30(1)	37.5	40
BC*0060LEACD	2DB3F25KE-TFE	575/3/60	8.6	63	1	1.2	15	20	—	—	—	—	8	24(1)	30	30
BC*0061LCACD	3DA3F28KE-TFC	208-230/3/60	24	150	1	2.7	32.7	50	—	—	—	—	20	60(2)	75	80
BC*0061LDACD	3DA3F28KE-TFD	460/3/60	10.8	77	1	1.9	20	25	—	—	—	—	10	30(1)	37.5	40
BC*0061LEACD	3DA3F28KE-TFE	575/3/60	9.4	62	1	1.2	15	20	–	—	—	—	8	24(1)	30	30
BC*0075LCACD	3DB3F33KE-TFC	208-230/3/60	27.6	161	1	2.7	37.2	60	—	—	—	—	20	60(2)	75	80
BC*0075LDACD	3DB3F33KE-TFD	460/3/60	14.1	83	1	1.9	20	30	—	—	—	—	10	30(1)	37.5	40
BC*0075LEACD	3DB3F33KE-TFE	575/3/60	9.9	67	1	1.2	15	20	—	—	—	—	8	24(1)	30	30
BC*0090LCACD	3DF3F40KE-TFC	208-230/3/60	33.2	215	2	2.7	46.9	80	—	—	—	—	20	70(2)	87.5	100
BC*0090LDACD	3DF3F40KE-TFD	460/3/60	15	106	2	1.9	22.6	35	—	—	—	—	13	35(1)	43.8	50
BC*0090LEACD	3DF3F40KE-TFE	575/3/60	14.1	84	2	1.2	20	30	—	—	—	—	10.4	28(1)	35	40
BC*0100LCACD	3DS3F46KE-TFC	208-230/3/60	37.2	215	2	2.7	51.9	80	—	—	—	—	20	70(2)	87.5	100
BC*0100LDACD	3DS3F46KE-TFD	460/3/60	16.7	106	2	1.9	24.6	40	—	—	—	—	13	35(1)	43.8	50
BC*0100LEACD	3DS3F46KE-TFE	575/3/60	14.6	84	2	1.2	20.6	35	—	—	—	—	10.4	28(1)	35	45
BC*0120LCACD	4DBNF54KE-TSK	208-230/3/60	46	220	2	4.4	66.3	110	15	40(1)	81.3	125	20	70(2)	87.5	125
BC*0120LDACD	4DBNF54KE-TSK	460/3/60	23	110	2	2.2	33.2	50	15	25(1)	48.2	70	15	40(1)	50	70
BC*0150LCACD	4DHNF63KE-TSK	208-230/3/60	47.2	278	2	4.4	67.8	110	15	48(1)	82.8	125	25	70(2)	92.8	125
BC*0150LDACD	4DHNF63KE-TSK	460/3/60	23.6	139	2	2.2	33.9	50	15	25(1)	48.9	70	15	40(1)	50	70
BC*0220LCACD	4DJNF76KE-TSK	208-230/3/60	57.7	374	2	4.4	80.9	125	15	48(1)	95.9	150	25	70(2)	105.9	150
BC*0220LDACD	4DJNF76KE-TSK	460/3/60	28.8	187	2	2.2	40.5	60	15	25(1)	55.5	80	15	48(1)	60	80

Notes:
* H = Outdoor, N = Indoor
Per UL and NEC, RLA values have been calculated by dividing the Maximum Continuous Current (MCC) by 1.56.
† Unless otherwise noted, model is available for 50 Hz. Consult factory for details.
‡ = Number of defrost heater contactors in parentheses
^ = Two fan large units have ability for a reduced amp electric defrost kit (low amps). Confirm proper defrost kit prior to ordering or installing.

C6 CABINET

LEFT

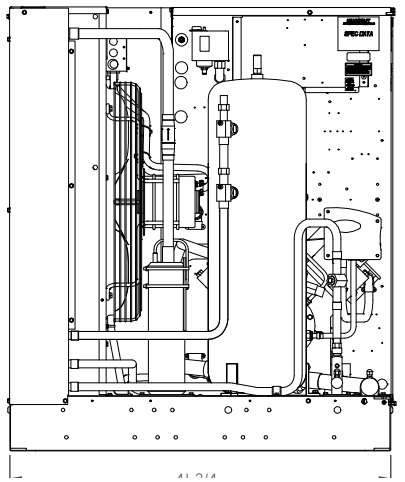

FRONT

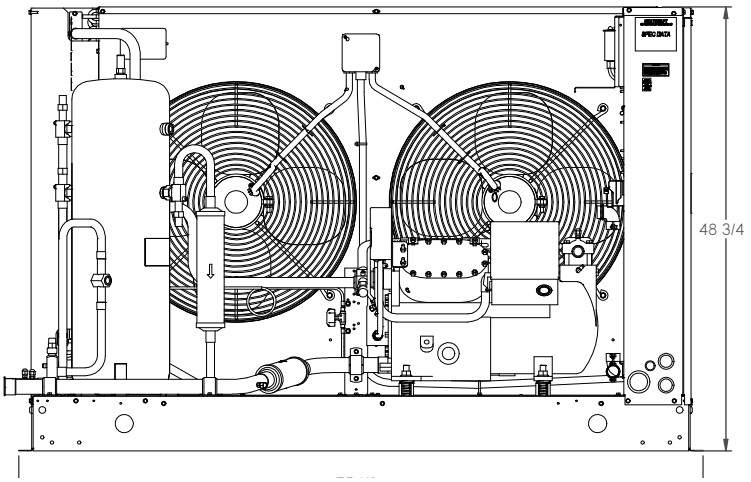

PRO^3 PACKAGED REFRIGERATION SYSTEMS

PRO 3 TOP MOUNT PACKAGED REFRIGERATION SYSTEMS

NOMENCLATURE

P	T	0097	M	A	T	A	M	C	A

PRODUCT LINE
P = PRO^3 Packaged Refrigeration System

DESIGN ORIENTATION
T = Top Mount

BTU CAPACITY
0024 = 2,400
0027 = 2,700
0028 = 2,800
0032 = 3,200
0036 = 3,600
0042 = 4,200
0046 = 4,600
0062 = 6,200
0068 = 6,800
0069 = 6,900
0078 = 7,800
0097 = 9,700
0115 = 11,500

TEMPERATURE RANGE
M = Medium
L = Low

VOLTAGE
A = 115/1/60
B = 208-230/1/60
C = 230/3/60

APPLICATION LOCATION
N = Indoor
T = Outdoor

DEFROST
A = Air
E = Electric

EVAPORATOR MOTOR
M = 2 Speed EC
E = Fixed Speed EC

PACKAGING
C = Crate
S = Standard

REVISION

AIR & ELECTRIC DEFROST
Medium Temperature/Cooler (R-448A)

Model	80°F Ambient		90°F Ambient		95°F Ambient		100°F Ambient		110°F Ambient	
	Box Temperature									
	35°F	38°F	35°F	38°F	35°F	38°F	35°F	38°F	35°F	38°F
PT0024MAN#ESA	2,520	2,640	2,380	2,510	2,310	2,420	2,230	2,340	2,080	2,180
PT0028MAN#ESA	2,930	3,070	2,770	2,920	2,670	2,820	2,590	2,720	2,430	2,590
PT0032MAN#ESA	3,380	3,530	3,210	3,360	3,090	3,270	3,010	3,180	2,830	2,990
PT0046MAN#M§A	4,640	4,910	4,410	4,660	4,290	4,550	4,150	4,400	3,860	4,110
PT0046MBN#M§A	4,820	5,140	4,550	4,820	4,430	4,680	4,290	4,540	4,000	4,250
PT0068MB*#M§A	7,120	7,460	6,770	7,150	6,620	7,020	6,460	6,740	6,000	6,360
PT0078MB*#M§A	8,240	8,660	7,760	8,270	7,720	8,060	7,460	7,720	7,060	7,380
PT0097MB*#M§A	9,980	10,390	9,560	10,100	9,370	9,900	9,120	9,560	8,600	8,980
PT0097MC*#M§A	10,030	10,450	9,730	10,190	9,430	9,980	9,190	9,770	8,660	9,090
PT0115MB*#M§A	11,830	12,490	11,510	12,160	11,240	11,850	10,890	11,460	10,180	10,690
PT0115MC*#M§A	12,070	12,570	11,580	12,080	11,330	11,850	10,990	11,560	10,270	10,780

PRO^3 PACKAGED REFRIGERATION SYSTEMS

PRO 3 TOP MOUNT PACKAGED REFRIGERATION SYSTEMS

ELECTRIC DEFROST
Low Temperature/Cooler (R-448A)

Model	80°F Ambient			90°F Ambient			95°F Ambient			100°F Ambient			110°F Ambient		
	Box Temperature														
	0°F	-10°F	-20°F	0°F	-10°F	-20°F	0°F	-10°F	-20°F	0°F	-10°F	-20°F	0°F	-10°F	-20°F
PT0027LB*EM§A	3,450	2,830	2,350	3,270	2,730	2,230	3,200	2,680	2,210	3,110	2,590	2,110	2,960	2,430	2,010
PT0036LB*EM§A	4,550	3,710	2,960	4,360	3,570	2,800	4,250	3,460	2,740	4,150	3,340	2,690	3,860	3,120	2,480
PT0042LB*EM§A	5,420	4,440	3,520	5,210	4,220	3,390	5,100	4,110	3,230	4,890	3,980	3,170	4,570	3,670	2,900
PT0062LB*EM§A	7,900	6,470	5,190	7,670	6,170	4,870	7,450	6,030	4,830	7,130	5,880	4,710	6,810	5,480	4,340
PT0062LC*EM§A	7,910	6,470	5,200	7,610	6,170	4,870	7,440	6,030	4,830	7,290	5,880	4,710	6,810	5,480	4,340
PT0069LB*EM§A	8,650	7,180	5,780	8,350	6,860	5,600	8,150	6,680	5,500	7,850	6,500	5,220	7,390	6,030	4,960
PT0069LC*EM§A	8,650	7,180	5,780	8,360	6,860	5,610	8,160	6,690	5,500	7,850	6,500	5,220	7,390	6,040	4,960

Notes:
A = Air defrost, E = Electric defrost
* N = Indoor, T = Outdoor
§ C = Crate, S = Standard

DIMENSIONAL DRAWINGS

FIGURE 1 P1 CABINET DESIGN/INDOOR ONLY

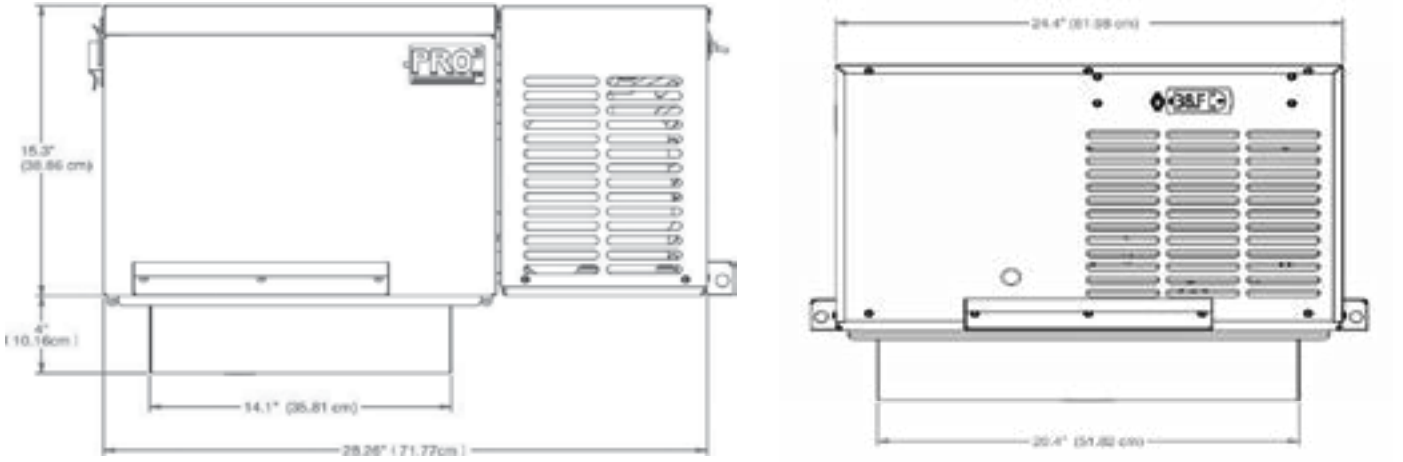

14.25" X 20.75" PANEL OPENING REQUIRED FOR EVAPORATOR SECTION OF "P1" CABINET SIZES.

PRO^3 PACKAGED REFRIGERATION SYSTEMS

PRO 3 TOP MOUNT PACKAGED REFRIGERATION SYSTEMS

P2 CABINET DESIGN



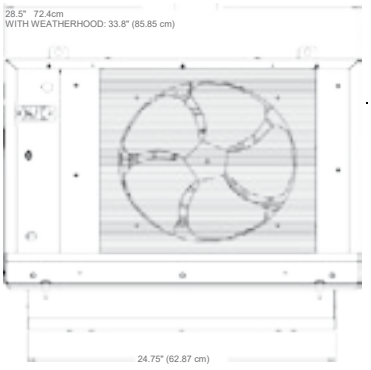

25”X25” PANEL OPENING REQUIRED FOR EVAPORATOR SECTION OF “P2” CABINET SIZES.
*** - 23.5” (59.69 cm) ON OUTDOOR MODELS WITH WEATHERHOOD**

P3 CABINET DESIGN

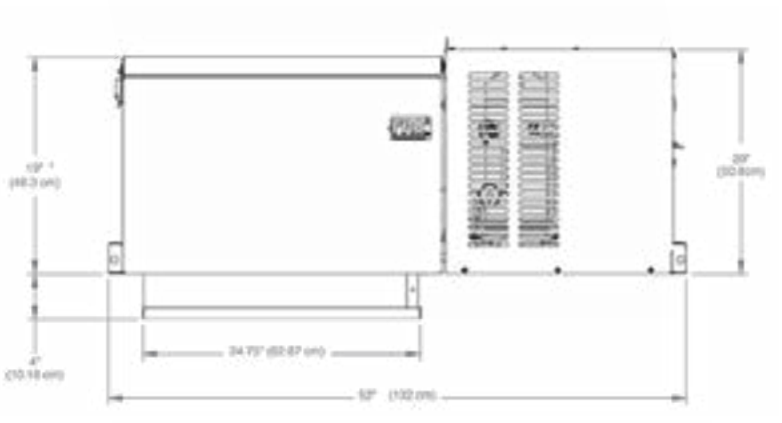

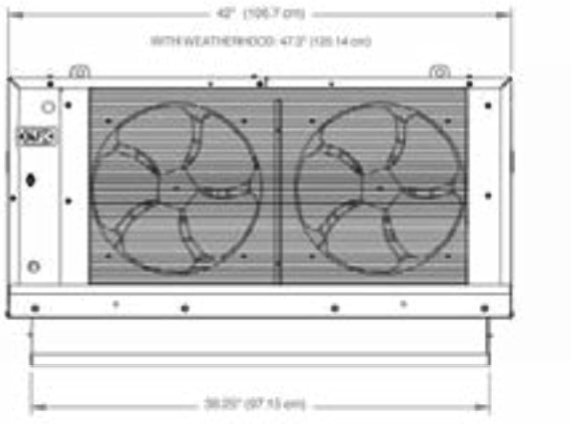

25”X38.5” PANEL OPENING REQUIRED FOR EVAPORATOR SECTION OF “P3” CABINET SIZES.
*** - 25.5” (64.77 cm) ON OUTDOOR MODELS WITH WEATHERHOOD**

REACH-IN UNIT COOLERS

KEEPRITE REFRIGERATION

Half Round Evaporators

R 395 - S1 D - XXXX

- **Half Round Evaporator**
- **Nominal Capacity:** x 10 @ 10°F TD, BTU/h
- **Voltage:** S1 = 115/1/60 S2 = 208-230/1/60
- **Design Generation**
- **Optional Suffix** Does not affect design

QR CODE FOR PRODUCT DATA SHEET

STANDARD FEATURES

- EC motors with patented SmartSpeed® Technology.
- Compatible with Low GWP Refrigerants
- Direct backwall location and minimum height provides maximum usable storage space.
- Textured heavy gauge aluminum cabinet - lightweight, doesn't show scratches.
- Rigid, slotted channel hangers simplify installation.
- Hinged drain pan for ease of cleaning and service.
- Full collar aluminum plate fins on expanded seamless copper tubes ensure optimum heat transfer efficiency.
- Fan motors are inherently protected

AVAILABLE OPTIONS

- TXV
- Liquid Line Solenoid Valve
- Mechanical Thermostat
- Painted Cabinet

SELECTION DATA

R407A R448A R449A Medium Temperature

Model R	Qty. Fans	Evap. Temp. Selection Capacity BTU/h	Air Flow		Refrig. Charge R407A **	
		25°F *(-4°C)*	CFM	L/S	LB.	*KG*
395	1	3950	587	*280*	1.4	*0.6*
495		4950	530	*250*	1.9	*0.9*
650		6500	1080	*510*	2.3	*1.0*
840		8400	1080	*510*	3.3	*1.5*
945		9450	1200	*570*	3.6	*1.6*
1100		11000	1300	*610*	4.1	*1.9*
1270		12700	1200	*570*	5.3	*2.4*
2150	2	21500	2050	*970*	8.3	*3.8*

- Capacities at other TD within a range of 8 to 15 °F *(4.4 to 8.3°C)* are directly proportional to TD, or use formula: Capacity = Rated capacity ÷ 10 x TD.

** For R448A/R449A, use conversion factor 0.96

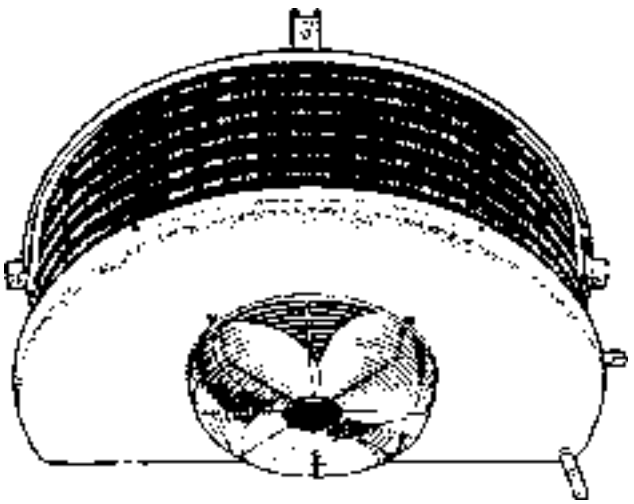

R404A R507 Medium Temperature

Model R	Qty. Fans	Evap. Temp. Selection Capacity BTU/h	Air Flow		Refrig. Charge R404A R507	
		25°F *(-4°C)*	CFM	L/S	LB.	*KG*
395	1	3690	587	*280*	1.3	*0.6*
495		4640	530	*250*	1.7	*0.8*
650		6070	1080	*510*	2.1	*1.0*
840		7860	1080	*510*	3.0	*1.4*
945		8840	1202	*570*	3.3	*1.5*
1100		10250	1300	*610*	3.8	*1.7*
1270		11850	1200	*570*	4.9	*2.2*
2150	2	20010	2050	*970*	7.6	*3.5*

- Capacities at other TD within a range of 8 to 15 °F *(4.4 to 8.3°C)* are directly proportional to TD, or use formula: Capacity = Rated capacity ÷ 10 x TD.

WALK-IN UNIT COOLERS

KEEPRITE REFRIGERATION

KLV Low Velocity Evaporator

QR CODE FOR PRODUCT DATA SHEET

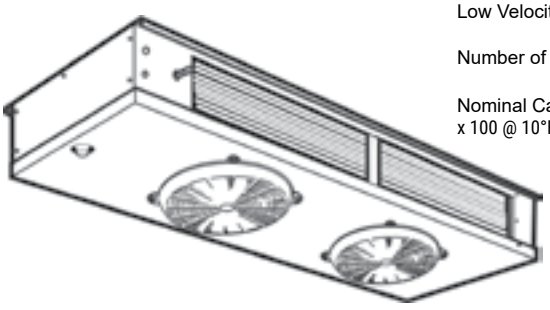

KLV 2 12 MA - S2 D

- KLV — Low Velocity Evaporator
- 2 — Number of Fans
- 12 — Nominal Capacity: x 100 @ 10°F TD, BTU/h
- MA — Defrost:
  MA = Air ME = Electric
  MG= Reverse Cycle Hot Gas Defrost w/ Electric Heater Pan
  MT= 3 Pipe Hot Gas Defrost w/ Electric Heater Pan
- S2 — Voltage:
  S1 = 115/1/60
  S2 = 208-230/1/60
- D — Design Generation

STANDARD FEATURES

- EC motors with patented SmartSpeed® Technology.
- Compatible with Low GWP Refrigerants
- Heavy gauge textured aluminum cabinet construction resists scratches/corrosion and minimizes weight for shipment, installation and service.
- Specially designed for quiet operation - ideal for prep. rooms.
- Dual refrigeration coils with two-way air distribution reduces air velocities to minimize product dehydration.
- Reduced operating charge with 3/8" OD tubing
- Spacious end compartment allows for easy component installation.
- Attractive and durable high-density polypropylene fan guards.
- Hinged drain pan provides convenient access for cleaning.
- Terminal board allows for easy electrical connections.
- Internally enhanced tube

AVAILABLE OPTIONS

- ESP+ Intuitive Evaporator Control Technology. See page 16
- Hot gas loop pan with hot gas defrost models
- Factory installed expansion valve, solenoid valve and room thermostat
- Painted cabinet
- Corrosion protection: alternate fin materials and coatings
- PSC Motors (115, 230 + 460V) - contact factory
- Additional options available, please contact factory

Medium Temperature - 7 FPI Models

Model KLV	Qty. Fans	R404A R507 Evaporator Temperature Selection Capacity BTU/h			R404A R507 Refrig. Charge		R407A R407C R448A R449A Evaporator Temperature Selection Capacity BTU/h			R407A R407C R448A R449A Refrig. Charge **		Air Flow	
		20/25°F (-4/-7°C)	15°F (-9°C)	10°F (-12°C)	LB.	KG	20/25°F (-4/-7°C)	15°F (-9°C)	10°F (-12°C)	LB.	KG	CFM	L/S
106	1	4870	4820	4770	2.4	*1.1*	5990	5930	5870	2.6	*1.2*	850	*401*
109		7040	6970	6900	4.0	*1.8*	8670	6910	8500	4.4	*2.0*	1120	*529*
212	2	10100	10000	9900	6.0	*2.7*	12400	12300	12200	6.5	*2.9*	1500	*708*
217		14100	14000	13800	6.7	*3.0*	17400	17200	17100	7.3	*3.3*	2000	*944*
325	3	20500	20300	20100	9.3	*4.2*	25200	24900	24700	10.1	*4.6*	2785	*1314*
331		25400	25100	24900	9.1	*4.1*	31300	31000	30700	9.9	*4.5*	3400	*1605*
437	4	30300	30000	29700	10.9	*5.0*	37200	36800	36500	11.9	*5.4*	4000	*1888*
441		33300	33000	32600	14.0	*6.3*	40900	40500	40100	15.2	*6.9*	4370	*2062*
546	5	37000	36600	36300	14.0	*6.3*	45600	45100	44700	15.2	*6.9*	4840	*2284*

- Capacities at other TD within a range of 8 to 15 °F *(4.4 to 8.3°C)* are directly proportional to TD, or use formula:
Capacity = Rated capacity ÷ 10 x TD.

** For R448A/R449A, use conversion factor 0.96

WALK-IN UNIT COOLERS

KEEPRITE REFRIGERATION

KTM Two-Way Evaporator

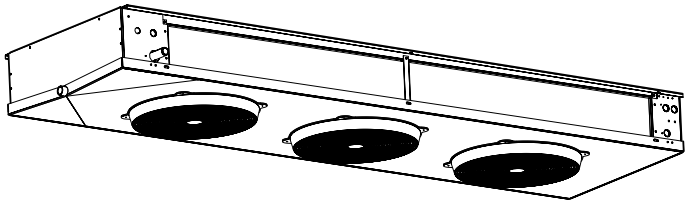

QR CODE FOR PRODUCT DATA SHEET

KTM 5 31 L E - S1 D

Two-Way Evaporator

Number of Fans

Nominal Capacity:
x 1000 @ 10°F TD, BTU/h

Application Range:
M = Medium Temp 6 FPI (10°F to 45°F Evap Temp)
L = Low Temp 6 FPI (-20°F to 0°F Evap Temp)

Design Generation

Voltage:
S1 = 115/1/60
S2 = 208-230/1/60 S6 = 200-220/1/50

Defrost:
A = Air
E = Electric
G = Reverse Cycle w/ Electric Heater Pan

Medium Temperature - 6 FPI Models

Model KTM	Qty. Fans	R404A R507 Evaporator Temperature Selection Capacity BTU/h			R404A R507 Refrig. Charge		R407A R407C R448A R449A Evaporator Temperature Selection Capacity BTU/h			R407A R407C R448A R449A Refrig. Charge **		Air Flow	
		20/25°F (-4/-7°C)	15°F (-9°C)	10°F (-12°C)	LB.	KG	20/25°F (-4/-7°C)	15°F (-9°C)	10°F (-12°C)	LB.	KG	CFM	L/S
207M	2	5680	5620	5570	1.3	0.6	6980	6910	6840	1.4	0.6	773	365
208M	2	6850	6780	6710	2.1	1.0	8430	6910	8260	2.3	1.0	672	317
313M	3	10400	10300	10200	3.1	1.4	12800	12700	12500	3.4	1.5	1035	488
215M	2	12500	12400	12300	2.9	1.3	15400	15200	15100	3.1	1.4	1900	897
318M	3	14800	14700	14500	3.1	1.4	18300	18100	17900	3.4	1.5	3030	1430
321M	3	16800	16600	16500	4.2	1.9	20700	20500	20300	4.6	2.1	2850	1345
426M	4	21100	20900	20700	5.2	2.4	26000	25700	25500	5.7	2.6	3780	1784
531M	5	25400	25100	24900	5.2	2.4	31300	31000	30700	5.7	2.6	4630	2185

- Capacities rated using 10°F (5.6°C) TD & 100°F (38°C) liquid temperature.
Capacities at other TD within a range of 8 to 15 °F (4.4 to 8.3°C) are directly proportional to TD, or use formula: Capacity = Rated capacity ÷ 10 x TD.
For capacities at TD outside of range 8 to 15 °F (4.4 to 8.3°C), or liquid temperature lower than 75°F (24°), consult factory.
** For R448A/R449A, use conversion factor 0.96

Low Temperature - 6 FPI Models

Model KTM	Qty. Fans	R404A R507 Evaporator Temperature Selection Capacity BTU/h			R404A R507 Refrig. Charge		R407A R448A R449A Evaporator Temperature Selection Capacity BTU/h			R407A R448A R449A Refrig. Charge **		Air Flow	
		20/25°F (-4/-7°C)	15°F (-9°C)	10°F (-12°C)	LB.	KG	20/25°F (-4/-7°C)	15°F (-9°C)	10°F (-12°C)	LB.	KG	CFM	L/S
204L	2	3370	3280	3180	1.3	0.6	4140	4030	3910	1.4	0.6	773	365
206L	2	4920	4780	4640	2.1	1.0	6040	5870	5700	2.3	1.0	672	317
309L	3	7410	7200	6990	3.1	1.4	9120	8860	8600	3.4	1.5	1035	488
212L	2	10500	10200	9920	2.9	1.3	12900	12600	12200	3.1	1.4	1900	897
315L	3	13100	12800	12400	3.1	1.4	16100	15700	15200	3.4	1.5	3030	1430
318L	3	15600	15100	14700	4.2	1.9	19200	18600	18100	4.6	2.1	2850	1345
422L	4	19000	18400	17900	5.2	2.4	23300	22700	22000	5.7	2.6	3780	1784
526L	5	22400	21700	21100	5.2	2.4	27500	26700	25900	5.7	2.6	4630	2185

- Capacities rated using 10°F (5.6°C) TD & 100°F (38°C) liquid temperature.
Capacities at other TD within a range of 8 to 15 °F (4.4 to 8.3°C) are directly proportional to TD, or use formula: Capacity = Rated capacity ÷ 10 x TD.
For capacities at TD outside of range 8 to 15 °F (4.4 to 8.3°C), or liquid temperature lower than 75°F (24°), consult factory.
** For R448A/R449A, use conversion factor 0.96

WALK-IN UNIT COOLERS

KEEPRITE REFRIGERATION

KLP Low Profile Evaporator

QR CODE FOR PRODUCT DATA SHEET

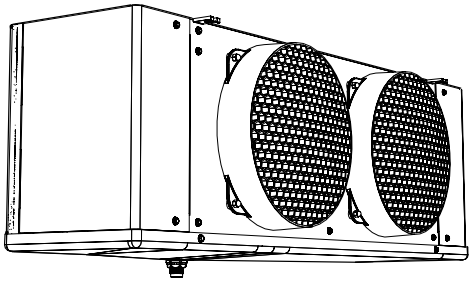

KLP 3 16 L E - S2 D

Low Profile Evaporator

Number of Fans

Nominal Capacity:
x 1000 @ 10°F TD, BTU/h

Application Range:
M = Medium to HighTemp 6 FPI (10°F to 45°F Evap Temp)
L = Low Temp 6 FPI (-40°F to 0°F Evap Temp)
V = Low Temp 4 FPI (-40°F to 0°F Evap Temp)

Defrost:
A = Air E = Electric
T = 3 Pipe Hot Gas w/ Electric Heater Pan
H = 3 Pipe Hot Gas w/ Hot Gas Loop Pan
G = Reverse Cycle w/ Electric Heater Pan
R = Reverse Cycle w/ Hot Gas Loop Pan

Voltage:
S1 = 115/1/60
T3 = 208-230/3/60
S2 = 208-230/1/60

Design Generation

STANDARD FEATURES

- EC motors with patented SmartSpeed® Technology.
- Compatible with Low GWP Refrigerants
- High efficiency and high strength fan guard
- Front access
- Internally enhanced tubing
- Convenient mounting brackets
- Ample electrical and header compartments
- Liquid line solenoid valve wire harness factory installed
- Schrader valve on suction header
- Positive slope, hinged drain pan
- Central drain connections (approximate)
- Universal drain fitting
- Large 3/4" ID (3/4" MPT) drain hole
- Factory installed distributor nozzle

AVAILABLE OPTIONS

- ESP+ Intuitive Evaporator Control Technology.
  See page 15
- Hot gas loop pan with hot gas defrost models
- Factory installed expansion valve, solenoid valve and room thermostat
- Wire fan guard
- Corrosion protection: alternate fin materials and coatings
- Additional options available, please contact factory

Medium Temperature - 6 FPI Models

Model KLP	Qty. Fans	R404A R507 Evaporator Temperature Selection Capacity BTU/h			R404A R507 Refrig. Charge		R407A R407C R448A R449A Evaporator Temperature Selection Capacity BTU/h			R407A R407C R448A R449A Refrig. Charge **		Air Flow	
		20/25°F (-4/-7°C)	15°F (-9°C)	10°F (-12°C)	LB.	KG	20/25°F (-4/-7°C)	15°F (-9°C)	10°F (-12°C)	LB.	KG	CFM	L/S
104M	1	4200	4160	4120	0.6	0.3	4310	4270	4220	0.7	0.3	750	350
106M		5770	5710	5650	1.0	0.5	5910	5850	5790	1.1	0.5	705	330
107M		6830	6760	6690	1.4	0.6	7000	6930	6860	1.5	0.7	680	320
209M	2	8500	8420	8330	1.2	0.5	8700	8610	8530	1.3	0.6	1500	710
211M		11100	10990	10880	1.3	0.6	11400	11300	11170	1.4	0.6	1410	670
214M		13300	13200	13030	1.8	0.8	13700	13600	13430	2.0	0.9	1360	640
317M	3	16600	16400	16270	2.8	1.3	16900	16700	16560	3.0	1.4	2115	1000
320M		19800	19600	19400	3.7	1.7	20300	20100	19890	4.0	1.8	2040	960
422M	4	21800	21600	21360	3.0	1.4	22400	22200	21950	3.3	1.5	2820	1330
427M		26400	26100	25870	3.6	1.6	27000	26700	26460	3.9	1.8	2720	1280
534M	5	32900	32600	32240	6.0	2.7	33700	33400	33030	6.5	2.9	3400	1600
640M	6	39400	39000	38610	7.2	3.3	40400	40000	39590	7.8	3.5	4080	1930

- Capacities at other TD within a range of 8 to 15 °F *(4.4 to 8.3°C)* are directly proportional to TD, or use formula:
Capacity = Rated capacity ÷ 10 x TD.

** For R448A/R449A, use conversion factor 0.96

WALK-IN UNIT COOLERS

KEEPRITE REFRIGERATION

KLP Low Profile Evaporator

QR CODE FOR PRODUCT DATA SHEET

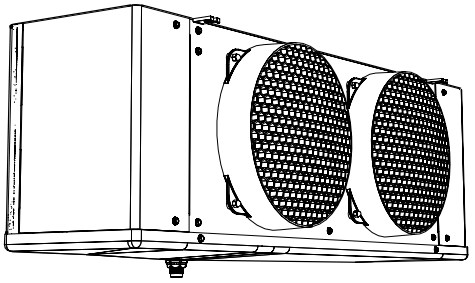

Low Temperature - 6 FPI Models

Model KLP	Qty. Fans	R404A R507 Evaporator Temperature Selection Capacity BTU/h					Refrig. Charge		R407A R448A R449A Evaporator Temperature Selection Capacity BTU/h					Refrig. Charge **		Air Flow	
		0°F (-18°C)	-10°F (-23°C)	-20°F (-29°C)	-30°F (-34°C)	-40°F (-40°C)	LB.	KG	0°F (-18°C)	-10°F (-23°C)	-20°F (-29°C)	-30°F (-34°C)	-40°F (-40°C)	LB.	KG	CFM	L/S
104L	1	4210	4090	3970	3650	3370	0.6	0.3	4310	4190	4070	3740	3460	0.7	0.3	750	350
105L		5070	4920	4780	4400	4060	1.0	0.5	5190	5050	4900	4510	4170	1.1	0.5	705	330
106L		6540	6360	6170	5680	5240	1.4	0.6	6710	6520	6330	5820	5380	1.5	0.7	680	320
207L	2	7400	7190	6980	6420	5930	1.2	0.5	7590	7370	7160	6590	6090	1.3	0.6	1500	710
209L		9710	9430	9160	8430	7790	1.3	0.6	9950	9670	9390	8640	7980	1.4	0.6	1410	670
211L		11660	11330	11000	10120	9350	1.8	0.8	11980	11600	11300	10400	9610	2.0	0.9	1360	640
314L	3	14420	14000	13600	12500	11560	2.8	1.3	14730	14300	13900	12800	11800	3.0	1.4	2115	1000
316L		16750	16300	15800	14500	13430	3.7	1.7	17170	16700	16200	14900	13800	4.0	1.8	2040	960
418L	4	18970	18400	17900	16500	15220	3.0	1.4	19500	19000	18400	16900	15600	3.3	1.5	2820	1330
421L		21840	21200	20600	19000	17510	3.6	1.6	22470	21800	21200	19500	18000	3.9	1.8	2720	1280
526L	5	27140	26400	25600	23600	21760	6.0	2.7	27670	26900	26100	24000	22200	6.5	2.9	3400	1600
631L	6	32220	31300	30400	28000	25840	7.2	3.3	32970	32000	31100	28600	26400	7.8	3.5	4080	1930

Low Temperature - 4 FPI Models

Model KLP	Qty. Fans	R404A R507 Evaporator Temperature Selection Capacity BTU/h					Refrig. Charge		R407A R448A R449A Evaporator Temperature Selection Capacity BTU/h					Refrig. Charge **		Air Flow	
		0°F (-18°C)	-10°F (-23°C)	-20°F (-29°C)	-30°F (-34°C)	-40°F (-40°C)	LB.	KG	0°F (-18°C)	-10°F (-23°C)	-20°F (-29°C)	-30°F (-34°C)	-40°F (-40°C)	LB.	KG	CFM	L/S
103V	1	3640	3530	3430	3160	2920	0.6	0.3	3880	3770	3660	3370	3110	0.7	0.3	750	350
104V		4300	4180	4060	3740	3450	1.0	0.5	4610	4480	4350	4000	3700	1.1	0.5	705	330
106V		5500	5350	5190	4770	4410	1.4	0.6	5880	5720	5550	5110	4720	1.5	0.7	680	320
207V	2	6600	6420	6230	5730	5300	1.2	0.5	7070	6870	6670	6140	5670	1.3	0.6	1500	710
208V		8020	7800	7570	6960	6430	1.3	0.6	8590	8340	8100	7450	6890	1.4	0.6	1410	670
211V		10460	10170	9870	9080	8390	1.8	0.8	11200	10900	10600	9750	9010	2.0	0.9	1360	640
313V	3	12400	12100	11700	10760	9950	2.8	1.3	13400	13000	12600	11600	10700	3.0	1.4	2115	1000
316V		15370	14900	14500	13300	12330	3.7	1.7	16500	16100	15600	14400	13300	4.0	1.8	2040	960
418V	4	17600	17100	16600	15300	14110	3.0	1.4	18800	18200	17700	16300	15000	3.3	1.5	2820	1330
421V		20880	20300	19700	18100	16750	3.6	1.6	22300	21600	21000	19300	17900	3.9	1.8	2720	1280
524V	5	23640	23000	22300	20500	18960	6.0	2.7	25300	24600	23900	22000	20300	6.5	2.9	3400	1600
627V	6	26610	25900	25100	23100	21340	7.2	3.3	28400	27600	26800	24700	22800	7.8	3.5	4080	1930

- Capacities at other TD within a range of 8 to 15 °F *(4.4 to 8.3°C)* are directly proportional to TD, or use formula:
Capacity = Rated capacity ÷ 10 x TD.

** For R448A/R449A, use conversion factor 0.96

WALK-IN UNIT COOLERS

KEEPRITE REFRIGERATION

KMP Medium Profile Evaporator

QR CODE FOR PRODUCT DATA SHEET

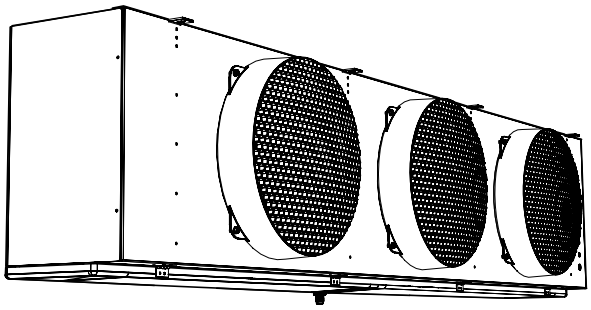

INCLUDES RATINGS FOR LOW GWP REFRIGERANTS

KMP 3 48 L E - T4 D - V

Medium Profile Evaporator

Number of Fans

Nominal Capacity:
x 1000 @ 10°F TD, BTU/h

Application Range:
M = Medium Temp 6 FPI (10°F to 35°F Evap Temp)
L = Low Temp 6 FPI (-40°F to 0°F Evap Temp)
V = Low Temp 4 FPI (-40°F to 0°F Evap Temp)
W = Fluid Air Cooler (with water or glycol)

Defrost:
A = Air E = Electric
T = 3 Pipe Hot Gas w/ Electric Heater Pan
or Warm Fluid w/ Electric Heater Pan for Fluid Air Coolers
H = 3 Pipe Hot Gas w/ Hot Gas Loop Pan
G = Reverse Cycle w/ Electric Heater Pan
R = Reverse Cycle w/ Hot Gas Loop Pan

Voltage:
S2 = 208-230/1/60
S4 = 460/1/60
T3 = 208-230/3/60
T4 = 460/3/60

Design Generation

Motor:
Blank = 2 speed SmartSpeed® EC Motor
V = Variable Speed EC Motors

STANDARD FEATURES

- EC motors with patented SmartSpeed® Technology.
- Compatible with Low GWP Refrigerants
- Totally enclosed high efficiency EC motors
- High efficiency and high strength fan guard
- Hinged access panels
- Internally enhanced tubing
- Ample electrical and header compartments
- Adjustable Fan Delay on medium temp. Electric Defrost and Hot Gas units
- Liquid line solenoid valve wire harness factory installed
- Schrader valve on suction header
- Positive slope, hinged drain pan
- Central drain connections (approximate)
- Universal drain fitting
- Large 3/4” ID (3/4” MPT) drain hole
- Factory installed distributor nozzle

AVAILABLE OPTIONS

- ESP+ Intuitive Evaporator Control Technology.
- Hot gas loop pan with hot gas defrost models
- 230/460V Variable Speed EC Motors
- Factory installed expansion valve, solenoid valve and room thermostat
- Corrosion protection: alternate fin materials and coatings
- Additional options available, please contact factory
- Wire fan guard

WALK-IN UNIT COOLERS

KEEPRITE REFRIGERATION

KMP Medium Profile Evaporator

Medium Temperature - 6 FPI Models (except +)

Model KMP	Qty. Fans	R404A R507					R407A R407C R448A R449A					Air Flow	
		Evaporator Temperature Selection Capacity BTU/h			Refrig. Charge		Evaporator Temperature Selection Capacity BTU/h			Refrig. Charge **			
		20/25°F (-4/-7°C)	15°F (-9°C)	10°F (-12°C)	LB.	KG	20/25°F (-4/-7°C)	15°F (-9°C)	10°F (-12°C)	LB.	KG	CFM	L/S
120M	1	16200	16040	15880	3.7	1.7	20000	19800	19600	4.0	1.8	3030	1430
124M	1	19400	19210	19010	4.9	2.2	23900	23700	23400	5.3	2.4	2860	1350
232M	2	26000	25740	25480	5.9	2.7	32000	31700	31400	6.4	2.9	6420	3030
240M	2	32500	32180	31850	7.1	3.2	40000	39600	39200	7.7	3.5	6070	2865
248M	2	38600	38210	37830	9.2	4.2	47500	47000	46600	10.0	4.5	5730	2704
360M	3	48900	48410	47920	10.1	4.6	60100	59500	58900	11.0	5.0	9100	4295
372M	3	58900	58310	57720	13.8	6.3	72400	71700	71000	15.0	6.8	8590	4054
486M	4	70100	69400	68700	16.6	7.5	86200	85300	84500	18.0	8.2	11490	5423
495M +	4	77100	76330	75560	16.6	7.5	94800	93900	92900	18.0	8.2	10780	5088

- Capacities at other TD within a range of 8 to 15 °F *(4.4 to 8.3°C)* are directly proportional to TD, or use formula:
Capacity = Rated capacity ÷ 10 x TD.

** For R448A/R449A, use conversion factor 0.96
+ 8 FPI unit

Low Temperature - 6 FPI Models

Model KMP	Qty. Fans	R404A R507							R407A R448A R449A							Air Flow	
		Evaporator Temperature Selection Capacity BTU/h					Refrig. Charge		Evaporator Temperature Selection Capacity BTU/h					Refrig. Charge **			
		0°F (-18°C)	-10°F (-23°C)	-20°F (-29°C)	-30°F (-34°C)	-40°F (-40°C)	LB.	KG	0°F (-18°C)	-10°F (-23°C)	-20°F (-29°C)	-30°F (-34°C)	-40°F (-40°C)	LB.	KG	CFM	L/S
116LE	1	13600	13200	12800	11800	10900	3.7	1.7	16700	16300	15800	14500	13400	4.0	1.8	3030	1430
120LE	1	16900	16400	15900	14600	13500	4.9	2.2	20800	20200	19600	18000	16700	5.3	2.4	2860	1350
224LE	2	20200	19700	19100	17600	16200	4.2	1.9	24900	24200	23500	21600	20000	4.6	2.1	6420	3030
233LE	2	28000	27200	26400	24300	22400	7.1	3.2	34500	33500	32500	29900	27600	7.7	3.5	6070	2865
239LE	2	33800	32900	31900	29300	27100	9.2	4.2	41600	40400	39200	36100	33300	10.0	4.5	5730	2704
347LE	3	40200	39000	37900	34900	32200	10.1	4.6	49400	48000	46600	42900	39600	11.0	5.0	9100	4295
355LE	3	47200	45800	44500	40900	37800	13.8	6.3	58000	56300	54700	50300	46500	15.0	6.8	8590	4054
470LE	4	60600	58900	57200	52600	48600	16.6	7.5	74500	72400	70300	64700	59800	18.0	8.2	11490	5423

Low Temperature - 4 FPI Models

Model KMP	Qty. Fans	R404A R507							R407A R448A R449A							Air Flow	
		Evaporator Temperature Selection Capacity BTU/h					Refrig. Charge		Evaporator Temperature Selection Capacity BTU/h					Refrig. Charge **			
		0°F (-18°C)	-10°F (-23°C)	-20°F (-29°C)	-30°F (-34°C)	-40°F (-40°C)	LB.	KG	0°F (-18°C)	-10°F (-23°C)	-20°F (-29°C)	-30°F (-34°C)	-40°F (-40°C)	LB.	KG	CFM	L/S
113VE	1	11000	10700	10400	9600	8800	3.7	1.7	13600	13200	12800	11800	10900	4.0	1.8	3220	1520
117VE	1	14400	14000	13600	12500	11600	4.9	2.2	17700	17200	16700	15400	14200	5.3	2.4	3030	1430
221VE	2	18000	17500	17000	15600	14500	4.2	1.9	22200	21500	20900	19200	17800	4.6	2.1	6800	3209
226VE	2	22600	21900	21300	19600	18100	7.1	3.2	27700	26900	26100	24000	22200	7.7	3.5	6430	3035
234VE	2	28800	28000	27200	25000	23100	9.2	4.2	35500	34500	33500	30800	28500	10.0	4.5	6070	2865
338VE	3	32500	31600	30700	28200	26100	10.1	4.6	40100	38900	37800	34800	32100	11.0	5.0	9630	4545
349VE	3	42000	40800	39600	36400	33700	13.8	6.3	51700	50300	48800	44900	41500	15.0	6.8	9100	4295
457VE	4	49300	47900	46500	42800	39500	16.6	7.5	60600	58900	57200	52600	48600	18.0	8.2	12100	5711

- Capacities at other TD within a range of 8 to 15 °F *(4.4 to 8.3°C)* are directly proportional to TD, or use formula:
Capacity = Rated capacity ÷ 10 x TD.

** For R448A/R449A, use conversion factor 0.96

WALK-IN UNIT COOLERS

KEEPRITE REFRIGERATION

KEP Extended Profile Evaporator

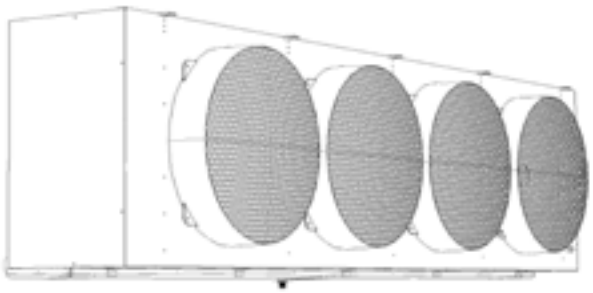

QR CODE FOR
PRODUCT DATA
SHEET

INCLUDES RATINGS FOR
LOW GWP
REFRIGERANTS

KEP 129 M A - S2 D

Extended Profile Evaporator

Nominal Capacity:
x 1000 @ 10°F TD, BTU/h

Application Range:
H = High Temp 7 FPI (25+°F Evap Temp)
M = Medium Temp 6 FPI (10°F to 35°F Evap Temp)
L = Low Temp 6 FPI (-40°F to 0°F Evap Temp)
V = Low Temp 4 FPI (-40°F to 0°F Evap Temp)

Design Generation

Voltage:
S2 = 208-230/1/60 T3 = 208-230/3/60
S4 = 460/1/60 T4 = 460/3/60

Defrost:
A = Air E = Electric
T = 3 Pipe Hot Gas w/ Electric Heater Pan
or Warm Fluid w/ Electric Heater Pan for Fluid Air Coolers
H = 3 Pipe Hot Gas w/ Hot Gas Loop Pan
G = Reverse Cycle w/ Electric Heater Pan
R = Reverse Cycle w/ Hot Gas Loop Pan

STANDARD FEATURES

- EC motors with patented SmartSpeed® Technology.
- Compatible with Low GWP Refrigerants
- High efficiency and high strength fan guard
- Hinged access panels
- Internally enhanced tubing
- Ample electrical and header compartments
- Adjustable Fan Delay on Electric Defrost units
- Liquid line solenoid valve wire harness factory installed
- Schrader valve on suction header
- Positive slope, hinged drain pan
- Central drain connections (approximate)
- Universal drain fitting
- Large 3/4” ID (3/4” MPT) drain hole
- Factory installed distributor nozzle

AVAILABLE OPTIONS

- **ESP+ Intuitive Evaporator Control Technology**
- Hot gas loop pan with hot gas defrost models
- 230/460V Variable Speed EC Motors
- Wire fan guard
- Factory installed expansion valve (TXV + EEV), solenoid valve and room thermostat
- Corrosion protection: alternate fin material and coatings
- Additional options available, please contact factory

WALK-IN UNIT COOLERS

KEEPRITE REFRIGERATION

KEP Extended Profile Evaporator

High Temperature - 7 FPI Models

Model KEP	Qty. Fans	R404A R507 Evaporator Temperature Selection Capacity BTU/h			R404A R507 Refrig. Charge		R407A R407C R448A R449A Evaporator Temperature Selection Capacity BTU/h			R407A R407C R448A R449A Refrig. Charge **		Air Flow	
		20/25°F (-4/-7°C)	15°F (-9°C)	10°F (-12°C)	LB.	KG	20/25°F (-4/-7°C)	15°F (-9°C)	10°F (-12°C)	LB.	KG	CFM	L/S
031H	1	24900	24700	24400	9.2	4.2	30600	30300	30000	10.0	4.5	3700	1750
036H	1	29400	29100	28800	12.2	5.6	36200	35800	35500	13.3	6.0	3500	1650
055H	2	44400	44000	43500	13.2	6.0	54700	54200	53600	14.4	6.5	7800	3680
061H	2	49800	49300	48800	17.8	8.1	61200	60600	60000	19.3	8.8	7300	3450
072H	2	58700	58100	57500	23.0	10.5	72100	71400	70700	25.0	11.4	6900	3260
094H	3	76200	75400	74700	25.3	11.5	93700	92800	91800	27.5	12.5	11000	5190
109H	3	88300	87400	86500	34.5	15.7	109000	107900	106800	37.5	17.0	10400	4910
135H	4	109000	107900	106800	41.4	18.8	135000	133700	132300	45.0	20.5	13600	6420

Medium Temperature - 6 FPI Models

Model KEP	Qty. Fans	R404A R507 Evaporator Temperature Selection Capacity BTU/h			R404A R507 Refrig. Charge		R407A R407C R448A R449A Evaporator Temperature Selection Capacity BTU/h			R407A R407C R448A R449A Refrig. Charge **		Air Flow	
		20/25°F (-4/-7°C)	15°F (-9°C)	10°F (-12°C)	LB.	KG	20/25°F (-4/-7°C)	15°F (-9°C)	10°F (-12°C)	LB.	KG	CFM	L/S
029M	1	23300	23100	22800	9.2	4.2	28700	28400	28100	10.0	4.5	3700	1750
034M	1	27500	27200	27000	12.2	5.6	33800	33500	33100	13.3	6.0	3500	1650
051M	2	41600	41200	40800	13.2	6.0	51200	50700	50200	14.4	6.5	7900	3730
057M	2	46600	46100	45700	17.8	8.1	57300	56700	56200	19.3	8.8	7500	3540
068M	2	55000	54500	53900	23.0	10.5	67600	66900	66200	25.0	11.4	7000	3300
088M	3	71300	70600	69900	25.3	11.5	87700	86800	85900	27.5	12.5	11200	5290
101M	3	82400	81600	80800	34.5	15.7	101000	100000	99000	37.5	17.0	10600	5000
125M	4	102000	101000	100000	41.4	18.8	125000	123800	122500	45.0	20.5	13900	6560

Low Temperature - 6 FPI Models

Model KEP	Qty. Fans	R404A R507 Evaporator Temperature Selection Capacity BTU/h					R404A R507 Refrig. Charge		R407A R448A R449A Evaporator Temperature Selection Capacity BTU/h					R407A R448A R449A Refrig. Charge **		Air Flow	
		0°F (-18°C)	-10°F (-23°C)	-20°F (-29°C)	-30°F (-34°C)	-40°F (-40°C)	LB.	KG	0°F (-18°C)	-10°F (-23°C)	-20°F (-29°C)	-30°F (-34°C)	-40°F (-40°C)	LB.	KG	CFM	L/S
025L	1	23200	22600	21900	20100	18600	9.2	4.2	26600	25900	25100	22800	21300	10.0	4.5	3700	1750
030L	1	26800	26100	25300	23300	21500	12.2	5.6	31600	30700	29800	27100	25300	13.3	6.0	3400	1600
038L	2	38800	37700	36600	33700	31100	13.2	6.0	40500	39300	38200	34800	32500	14.4	6.5	7700	3630
050L	2	45700	44400	43100	39700	36600	17.8	8.1	53300	51800	50300	45800	42800	19.3	8.8	7300	3450
060L	2	54200	52600	51100	47000	43400	23.0	10.5	63200	61400	59600	54200	50700	25.0	11.4	6900	3260
075L	3	68500	66500	64600	59400	54900	25.3	11.5	79900	77700	75400	68600	64100	27.5	12.5	11000	5190
089L	3	81200	78900	76600	70500	65100	34.5	15.7	94800	92100	89400	81400	76000	37.5	17.0	10300	4860
108L	4	98500	95700	92900	85500	79000	41.4	18.8	114500	111200	108000	98300	91800	45.0	20.5	13600	6420

Low Temperature - 4 FPI Models

Model KEP	Qty. Fans	R404A R507 Evaporator Temperature Selection Capacity BTU/h					R404A R507 Refrig. Charge		R407A R448A R449A Evaporator Temperature Selection Capacity BTU/h					R407A R448A R449A Refrig. Charge **		Air Flow	
		0°F (-18°C)	-10°F (-23°C)	-20°F (-29°C)	-30°F (-34°C)	-40°F (-40°C)	LB.	KG	0°F (-18°C)	-10°F (-23°C)	-20°F (-29°C)	-30°F (-34°C)	-40°F (-40°C)	LB.	KG	CFM	L/S
022V	1	18900	18300	17800	16400	15100	9.2	4.2	21600	21000	20400	18800	17300	10.0	4.5	3700	1750
025V	1	21800	21200	20600	19000	17500	12.2	5.6	25700	24900	24200	22300	20600	13.3	6.0	3400	1600
037V	2	31600	30700	29800	27400	25300	13.2	6.0	33000	32000	31100	28600	26400	14.4	6.5	7700	3630
043V	2	37100	36100	35000	32200	29800	17.8	8.1	43400	42100	40900	37600	34800	19.3	8.8	7300	3450
051V	2	44000	42700	41500	38200	35300	23.0	10.5	51300	49900	48400	44500	41100	25.0	11.4	6900	3260
065V	3	55700	54100	52500	48300	44600	25.3	11.5	65000	63100	61300	56400	52100	27.5	12.5	11000	5190
077V	3	66000	64200	62300	57300	53000	34.5	15.7	77000	74800	72600	66800	61700	37.5	17.0	10300	4860
093V	4	80000	77800	75500	69500	64200	41.4	18.8	93300	90600	88000	81000	74800	45.0	20.5	13600	6420

- Capacities at other TD within a range of 8 to 15 °F *(4.4 to 8.3°C)* are directly proportional to TD, or use formula:
  Capacity = Rated capacity ÷ 10 x TD.

** For R448A/R449A, use conversion factor 0.96

CONDENSING UNITS

KEEPRITE REFRIGERATION

KEH Condensing Units

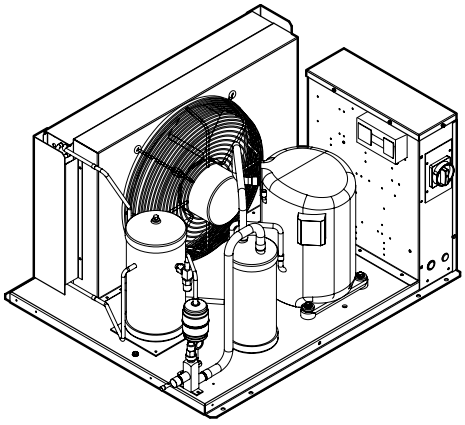

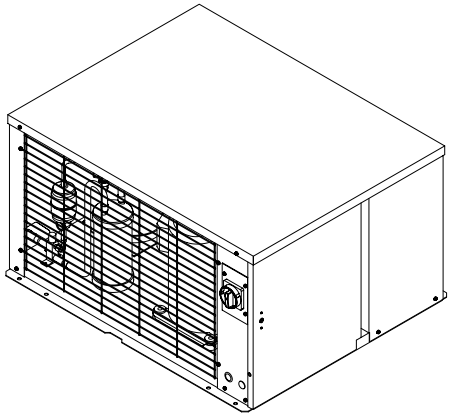

KEH A 010 M 8 - H T3 D - A D J

Model Series
KEH = Excel Hermetic Air Cooled Condensing Unit Line

Compressor Manufacturer
A = Copeland

Nominal HP
005 - 035 = 1/2 - 3.5 HP

Application Range
M = Medium Temp
L = Low Temp

Refrigerant*
6 = R404A / R507
8 = R404A / R407A / R448A / R449A

Pre-Selected Factory Mounted Option Packages
See detail on next page

Design Generation
D = Latest Catalog Series

Voltage*
S2 = 208/230-1-60
S3 = 230-1-60
S6 = 200/220-1-50
S7 = 200-1-50
T3 = 208/230-3-60
T4 = 460-3-60
T5 = 575-3-60
T7 = 200/220-3-50
T9 = 380/400-3-50

* subject to compressor availability

Enclosure
H = Outdoor
I = Indoor

STANDARD FEATURES

Indoor Unit:

- Weatherproof electrical control box with compressor contactor and fused control circuit
- Welded-hermetic compressor
- High efficiency enhanced tube and fin condenser design
- Pre-formed piping
- Quiet fan motor operation
- SmartSpeed EC Fan Motor Technology standard on models using chassis 1 and 2 (see page 13)
- Energy efficient PSC condenser fan motor on models using chassis 3 (see page 13)
- Electrical control panel away from air flow stream
- Unit leak tested and shipped with helium holding charge
- Painted cabinet
- Receiver with fusible plug and liquid shut off valve
- Suction service valve
- Copper tubing secured with cushion clamps
- Fixed high and adjustable low pressure control

Outdoor Unit: All Standard Features of Indoor Unit, Plus:

- Painted weather-resistant housing with removable hood
- Flooded head pressure control (adjustable)
- Crankcase heater

CONDENSING UNITS

KEEPRITE REFRIGERATION

SELECTION CAPACITY DATA

R404A R507 Medium Temperature

Model KEH	Saturated Suction Temp.		Selection Capacity BTU/h 95°F *(35°C)* Ambient Temp		
	° F	° C	404/ 507	407A	448/ 449
	40	*4.4*	8350	-	-
	35	*1.7*	7710	-	-
KEHA006M8	30	*-1.1*	7080	-	6860
	25	*-3.9*	6480	-	6200
Compressor	20	*-6.7*	5890	-	5560
Model	15	*-9.4*	5340	-	4980
RST45C2E	10	*-12.2*	4810	-	4420
	5	*-15.0*	4310	-	3910
	0	*-17.8*	3850	-	3430
	40	*4.4*	18100	-	-
	35	*1.7*	16800	-	-
KEHA015M8	30	*-1.1*	15400	15000	15500
	25	*-3.9*	14100	13200	13700
Compressor	20	*-6.7*	12800	11500	12100
Model	15	*-9.4*	11500	10000	10500
CS10K6E	10	*-12.2*	10200	8540	9050
	5	*-15.0*	8920	7160	7680
	0	*-17.8*	7710	5860	6410
	40	*4.4*	21300	-	-
	35	*1.7*	19500	-	-
KEHA020M8	30	*-1.1*	17700	16800	17400
	25	*-3.9*	16000	14900	15400
Compressor	20	*-6.7*	14400	13100	13500
Model	15	*-9.4*	12900	11300	11900
CS12K6E	10	*-12.2*	11500	9720	10200
	5	*-15.0*	10100	8250	8800
	0	*-17.8*	8820	6920	7530
	40	*4.4*	27000	-	-
	35	*1.7*	25000	-	-
KEHA025M8	30	*-1.1*	23000	21500	23800
	25	*-3.9*	21000	19000	21100
Compressor	20	*-6.7*	19000	16500	18400
Model	15	*-9.4*	17100	14200	15900
CS14K6E	10	*-12.2*	15300	12100	13600
	5	*-15.0*	13500	10200	11500
	0	*-17.8*	11800	8560	9740
	40	*4.4*	33200	-	-
	35	*1.7*	30800	-	-
KEHA030M8	30	*-1.1*	28500	26800	29100
	25	*-3.9*	26000	23600	25800
Compressor	20	*-6.7*	23600	20500	22800
Model	15	*-9.4*	21200	17700	20000
CS18K6E	10	*-12.2*	18800	15200	17400
	5	*-15.0*	16500	12900	15000
	0	*-17.8*	14300	10800	12700
	40	*4.4*	39900	-	-
	35	*1.7*	35900	-	-
KEHA035M8	30	*-1.1*	32200	29700	-
	25	*-3.9*	28800	26200	-
Compressor	20	*-6.7*	25600	23100	-
Model	15	*-9.4*	22800	20200	-
CS20K6E	10	*-12.2*	20200	17500	-
	5	*-15.0*	17900	15000	-
	0	*-17.8*	15700	12600	-

R404A R507 Low Temperature

Model KEH	Saturated Suction Temp.		Selection Capacity BTU/h 95°F *(35°C)* Ambient Temp		
	° F	° C	404/ 507	407A	448/ 449
	0	*-17.8*	4460	----	----
KEHA008L6	-5	*-20.6*	3980	----	----
	-10	*-23.3*	3530	----	----
Compressor	-15	*-26.1*	3100	----	----
Model	-20	*-28.9*	2700	----	----
RFT26C1E	-25	*-31.7*	2330	----	----
	-30	*-34.4*	1990	----	----
	0	*-17.8*	7190	----	----
KEHA010L6	-5	*-20.6*	6280	----	----
	-10	*-23.3*	5460	----	----
Compressor	-15	*-26.1*	4710	----	----
Model	-20	*-28.9*	4000	----	----
CF04K6E	-25	*-31.7*	3310	----	----
	-30	*-34.4*	2620	----	----
	0	*-17.8*	9750	-----	----
KEHA015L6	-5	*-20.6*	8760	----	----
	-10	*-23.3*	7770	----	----
Compressor	-15	*-26.1*	6790	----	----
Model	-20	*-28.9*	5820	----	----
CF06K6E	-25	*-31.7*	4900	----	----
	-30	*-34.4*	4050	----	----
	0	*-17.8*	10300	-----	-----
KEHA020L6	-5	*-20.6*	9250	----	----
	-10	*-23.3*	8180	----	----
Compressor	-15	*-26.1*	7120	----	----
Model	-20	*-28.9*	6090	----	----
CF06K6E	-25	*-31.7*	5110	----	----
	-30	*-34.4*	4210	----	----
	0	*-17.8*	15900	-----	-----
KEHA025L6	-5	*-20.6*	14200	-----	-----
	-10	*-23.3*	12500	-----	-----
Compressor	-15	*-26.1*	10900	-----	-----
Model	-20	*-28.9*	9340	-----	----
CF09K6E	-25	*-31.7*	7860	----	----
	-30	*-34.4*	6470	----	----

CONDENSING UNITS

KEEPRITE REFRIGERATION

KEZ Condensing Units

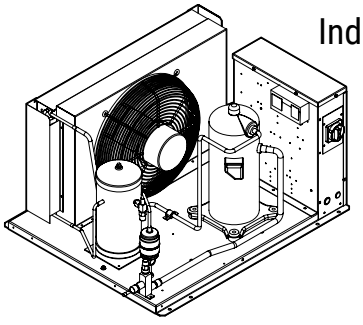

Indoor Unit

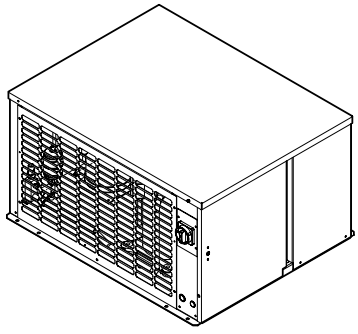

Outdoor Unit

KEZ A 075 H 8 - H T4 D -A D J

Model Series
KEZ = Excel Scroll Air Cooled Condensing Unit Line

Compressor Manufacturer
A = Copeland

Nominal HP
007 - 170 = 3/4 - 17 HP

Application Range
H = High and Med Temp
L = Low Temp

Refrigerant*
8 = R407A, R407C, R448A, R449A, R404A, R507

Enclosure
H = Outdoor
I = Indoor

Voltage*
S2 = 208/230-1-60
S3 = 230-1-60
S6 = 200/220-1-50
S7 = 200-1-50
T3 = 208/230-3-60
T4 = 460-3-60
T5 = 575-3-60
T7 = 200/220-3-50
T9 = 380/400-3-50

* subject to compressor availability

Design Generation
D = Latest Catalog Series

Pre-Selected Factory Mounted Option Packages
See detail on next page

STANDARD FEATURES

Indoor Unit:

- Compatible with Low GWP Refrigerants
- Weatherproof electrical control box with compressor contactor and fused control circuit
- Copeland scroll compressor
- High efficiency enhanced tube and fin condenser design
- SmartSpeed EC Fan Motor Technology standard on models using chassis 1 (see page 35)
- Energy efficient PSC condenser fan motor on models using chassis 2 thru 6 (see page 35)
- Receiver with fusible plug and liquid shut off valve
- Suction service valve
- Pre-formed copper tubing
- Liquid injection (low temp. models)
- Unit leak tested and shipped with helium holding charge
- Fixed high pressure switch and adjustable low pressure control
- Receiver inlet valve on 2-fan units models only
- Discharge thermostat on applicable models only
- Painted cabinet
- Time delay relay for compressor

Outdoor Unit: All Standard Features of Indoor Unit, Plus:

- Painted weather-resistant housing with removable hood
- Flooded head pressure control (adjustable)
- Crankcase heater
- Fan cycling control with flex hose (2 fan units)

CONDENSING UNITS

KEEPRITE REFRIGERATION

KEZ CONDENSING UNITS SELECTION CAPACITY DATA
Low Temperature

Model KEZA	Saturated Suction Temp.		Selection Capacity BTU/h 95°F *(35°C)* Ambient Temp		
	° F	° C	404/ 507	407A	448/ 449
KEZA008L8 Compressor Model ZF03KAE	0	-17.8	5070	4470	4740
	-5	-20.6	4530	4000	4230
	-10	-23.3	4050	3570	3790
	-15	-26.1	3620	3190	3390
	-20	-28.9	3230	2850	3030
	-25	-31.7	2900	2540	2710
	-30	-34.4	2600	2270	2420
	-35	-37.2	2330	2030	2140
	-40	-40.0	2100	1800	1880
KEZA010L8 Compressor Model ZF04KAE	0	-17.8	6710	6100	6420
	-5	-20.6	6000	5410	5710
	-10	-23.3	5350	4770	5060
	-15	-26.1	4750	4190	4460
	-20	-28.9	4210	3680	3930
	-25	-31.7	3730	3210	3440
	-30	-34.4	3310	2820	3020
	-35	-37.2	2940	2510	2670
	-40	-40.0	2650	2260	2360
KEZA015L8 Compressor Model ZF05KAE	0	-17.8	7920	7140	7510
	-5	-20.6	7160	6340	6710
	-10	-23.3	6430	5600	5960
	-15	-26.1	5760	4910	5280
	-20	-28.9	5130	4310	4640
	-25	-31.7	4550	3760	4070
	-30	-34.4	4020	3290	3560
	-35	-37.2	3550	2890	3110
	-40	-40.0	3140	2550	2720
KEZA020L8 Compressor Model ZF07KAE	0	-17.8	11000	10200	10600
	-5	-20.6	10100	9250	9600
	-10	-23.3	9190	8340	8640
	-15	-26.1	8340	7500	7780
	-20	-28.9	7550	6710	6980
	-25	-31.7	6780	5960	6250
	-30	-34.4	6040	5260	5550
	-35	-37.2	5300	4580	4880
	-40	-40.0	4560	3910	4200
KEZA025L8 Compressor Model ZF08K4E	0	-17.8	14000	13100	14000
	-5	-20.6	12800	11800	12500
	-10	-23.3	11600	10500	11200
	-15	-26.1	10500	9390	10000
	-20	-28.9	9470	8320	8900
	-25	-31.7	8500	7320	7880
	-30	-34.4	7590	6410	6930
	-35	-37.2	6730	5570	6070
	-40	-40.0	5940	4810	5280
KEZA030L8 Compressor Model ZF09K4E	0	-17.8	15500	14600	14800
	-5	-20.6	14100	12800	13400
	-10	-23.3	12900	11200	12200
	-15	-26.1	11700	9850	11000
	-20	-28.9	10600	8620	9860
	-25	-31.7	9540	7540	8790
	-30	-34.4	8540	6570	7770
	-35	-37.2	7590	5700	6780
	-40	-40.0	6680	4910	5820
KEZA035L8 Compressor Model ZF11K4E	0	-17.8	18200	17600	18000
	-5	-20.6	16700	15500	16300
	-10	-23.3	15300	13700	14600
	-15	-26.1	14000	12000	13100
	-20	-28.9	12700	10500	11800
	-25	-31.7	11400	9170	10500
	-30	-34.4	10300	8020	9300
	-35	-37.2	9170	6990	8240
	-40	-40.0	8110	6060	7280

Model KEZA	Saturated Suction Temp.		Selection Capacity BTU/h 95°F *(35°C)* Ambient Temp		
	° F	° C	404/ 507	407A	448/ 449
KEZA045L8 Compressor Model ZF13K4E	0	-17.8	23000	21500	22700
	-5	-20.6	20900	19200	20400
	-10	-23.3	18900	17000	18200
	-15	-26.1	17000	14900	16100
	-20	-28.9	15200	13000	14200
	-25	-31.7	13500	11400	12500
	-30	-34.4	12000	10000	10900
	-35	-37.2	10600	8860	9630
	-40	-40.0	9290	8040	8490
KEZA055L8 Compressor Model ZF15K4E	0	-17.8	28300	26300	27700
	-5	-20.6	25700	23500	24900
	-10	-23.3	23300	20800	22300
	-15	-26.1	21000	18400	19800
	-20	-28.9	18900	16200	17600
	-25	-31.7	16900	14300	15600
	-30	-34.4	15100	12600	13900
	-35	-37.2	13400	11200	12200
	-40	-40.0	11800	10200	10800
KEZA060L8 Compressor Model ZF18K4E	0	-17.8	33100	31100	32400
	-5	-20.6	30200	27900	29400
	-10	-23.3	27500	24900	26500
	-15	-26.1	24900	22100	23700
	-20	-28.9	22500	19400	21100
	-25	-31.7	20200	17100	18800
	-30	-34.4	18100	15100	16700
	-35	-37.2	16100	13400	14700
	-40	-40.0	14100	12200	13000
KEZA075L8 Compressor Model ZF25K4E	0	-17.8	41800	38700	41100
	-5	-20.6	37900	34800	36800
	-10	-23.3	34300	31000	32900
	-15	-26.1	31000	27400	29200
	-20	-28.9	27800	24300	25900
	-25	-31.7	25000	21300	23000
	-30	-34.4	22300	18800	20400
	-35	-37.2	19800	16700	18100
	-40	-40.0	17600	15100	16200
KEZA085L8 Compressor Model ZF28K4E	0	-17.8	46400	44500	46800
	-5	-20.6	42200	40000	42100
	-10	-23.3	38300	35600	37700
	-15	-26.1	34600	31600	33700
	-20	-28.9	31200	27900	29900
	-25	-31.7	28000	24600	26600
	-30	-34.4	25100	21700	23600
	-35	-37.2	22400	19300	21100
	-40	-40.0	19900	17500	18900
KEZA100L8 Compressor Model ZF34K5E	0	-17.8	51500	51800	51300
	-5	-20.6	47200	46400	46400
	-10	-23.3	43000	41400	41800
	-15	-26.1	39100	36600	37400
	-20	-28.9	35400	32300	33300
	-25	-31.7	31800	28400	29400
	-30	-34.4	28300	24900	25800
	-35	-37.2	25000	22100	22500
	-40	-40.0	21800	19700	19300
KEZA130L8 Compressor Model ZF41K5E	0	-17.8	66400	65800	66900
	-5	-20.6	60700	59100	60400
	-10	-23.3	55400	52700	54300
	-15	-26.1	50300	46700	48600
	-20	-28.9	45500	41300	43400
	-25	-31.7	40900	36300	38300
	-30	-34.4	36600	32000	33700
	-35	-37.2	32400	28400	29300
	-40	-40.0	28400	25500	25300

Model KEZA	Saturated Suction Temp.		Selection Capacity BTU/h 95°F *(35°C)* Ambient Temp		
	° F	° C	404/ 507	407A	448/ 449
KEZA150L8 Compressor Model ZF49K5E	0	-17.8	77800	77900	79200
	-5	-20.6	71100	69800	71400
	-10	-23.3	64800	62200	64200
	-15	-26.1	58800	55000	57300
	-20	-28.9	53100	48400	50900
	-25	-31.7	47700	42500	45000
	-30	-34.4	42600	37500	39600
	-35	-37.2	37900	33300	34700
	-40	-40.0	33400	30100	30100
KEZA170L8 Compressor Model ZF54K5E	0	-17.8	95100	87300	89900
	-5	-20.6	86300	78100	80700
	-10	-23.3	78000	69600	72200
	-15	-26.1	70400	61700	64400
	-20	-28.9	63200	54600	57200
	-25	-31.7	56600	48000	50600
	-30	-34.4	50500	42100	44500
	-35	-37.2	44800	36600	39100
	-40	-40.0	39500	31700	34100

CONDENSING UNITS

KEEPRITE REFRIGERATION

KES Condensing Units

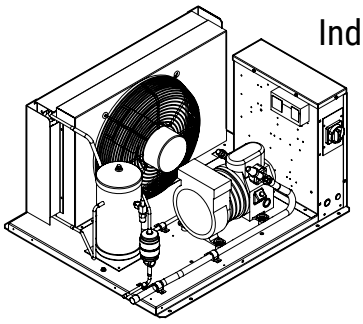

Indoor Unit

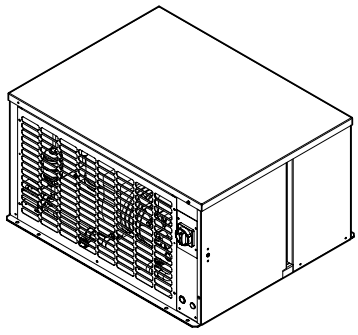

Outdoor Unit

KES A 075 H 8 - H T4 D - A D J

Model Series
KES = Excel Semi-Hermetic Air Cooled Condensing Unit Line

Compressor Manufacturer
A = Copeland
B = Bitzer

Nominal HP
029 - 220 = 3 - 22 HP

Application Range
H = High and Med Temp
L = Low Temp

Pre-Selected Factory Mounted Option Packages
See detail on next page

Design Generation
D = Latest Catalog Series

Voltage*
S2 = 208/230-1-60
S3 = 230-1-60
S6 = 200/220-1-50
S7 = 200-1-50
T3 = 208/230-3-60
T4 = 460-3-60
T5 = 575-3-60
T7 = 200/220-3-50
T9 = 380/400-3-50
* subject to compressor availability

Enclosure
H = Outdoor
I = Indoor

Refrigerant*
6 = R404A, R507
8 = R407A, R407C, R404A, R507, R448

AVAILABLE OPTIONS

- Suction accumulator
- Suction accumulator with boil-out coil
- Discharge line Check valve
- Oil separator
- Oil separator c/w oil return filter & solenoid valve
- Receiver inlet ball valve (standard on 2 fan models)
- Heated and Insulated receiver
- Over-sized receiver
- Sealed liquid line filter drier & sight-glass
- Ball valve - liquid line (shipped loose)
- Insulated suction lines
- Leg Kits
- Discharge air hood
- Sub cooling circuit on 5 - 22 HP models
- Variable speed EC motors as head pressure control (see Bulletin K40-HPC-AG or http://docs.k-rp.com/1101110.pdf for details)
- QuickVac Evacuation and Refrigerant Recovery Valves
- Liquid line solenoid valve-(with standard 230 volt coil) - shipped loose
- Compressor Circuit breaker
- Current sensing relay - for use with oil safety control (where applicable)
- Defrost heater contactor c/w fuse block
- Evaporator Fan contactor c/w fuse block
- Disconnect switch
- Disconnect Fusing
- Pump down toggle switch
- Lock out control circuit
- Time delay relay for compressor
- Mechanical Time Clock
- Defrost Kit
- Electronic Voltage/Phase Monitor
- **SmartSpeed Fan Motor Technology (see page 4)**
- **Limitrol+ Floating Head Pressure Control System (see page 5 or Bulletin K40-HPC-AG or http://docs.k-rp.com/1101113.pdf for details)**

CONDENSING UNITS

KEEPRITE REFRIGERATION

KES Condensing Units

STANDARD FEATURES

Indoor Unit:

- Compatible with Low GWP Refrigerants
- Weatherproof electrical control box with compressor contactor and fused control circuit
- Spring mounted accessible semi-hermetic compressor with suction and discharge vibration eliminator
- High efficiency enhanced tube and fin condenser design
- Energy efficient PSC condenser fan motor
- Receiver with fusible plug and liquid shut off valve
- Fixed high pressure switch and adjustable low pressure control
- Receiver inlet and outlet shutoff valve (8HP and above)
- Suction service valve
- Pre-formed copper tubing
- Unit leak tested and shipped with Helium holding charge
- Electronic liquid injection on L8 units
- Painted cabinet

Outdoor Unit: All Standard Features of Indoor Unit, Plus:

- Painted outdoor weather-resistant housing with removable hood
- Flooded head pressure control (adjustable)
- Crankcase heater
- Fan cycling control (all 2 fan models)

SELECTION CAPACITY DATA

Low Temperature - BITZER

Model KESB	Saturated Suction Temperature		Selection Capacity BTU/h 95°F *(35°C)* Ambient Temp		
			404/ 507	407A	448/ 449
	° F	° C			
KESB030L6 Compressor Model 2CES-3	0	*-17.8*	24800	21700	22800
	-5	*-20.6*	22300	19100	20100
	-10	*-23.3*	19900	16700	17600
	-15	*-26.1*	17700	14500	15300
	-20	*-28.9*	15600	12500	13300
	-25	*-31.7*	13600	10600	11400
	-30	*-34.4*	11800	8930	9660
	-35	*-37.2*	10000	7350	8090
	-40	*-40.0*	8400	5990	6620
KESB031L6 Compressor Model 4FES-3	0	*-17.8*	26200	22100	24500
	-5	*-20.6*	23500	19200	21500
	-10	*-23.3*	21100	16600	18800
	-15	*-26.1*	18700	14300	16400
	-20	*-28.9*	16600	12200	14200
	-25	*-31.7*	14600	10200	12100
	-30	*-34.4*	12700	8400	10300
	-35	*-37.2*	11000	6830	8510
	-40	*-40.0*	9400	5250	6930
KESB039L6 Compressor Model 4EES-4	0	*-17.8*	33100	28200	30500
	-5	*-20.6*	29700	24600	26800
	-10	*-23.3*	26600	21300	23300
	-15	*-26.1*	23600	18400	20300
	-20	*-28.9*	20900	15600	17500
	-25	*-31.7*	18300	13200	14900
	-30	*-34.4*	16000	10900	12600
	-35	*-37.2*	13800	8930	10500
	-40	*-40.0*	11700	7040	8510
KESB050L6 Compressor Model 4DES-5	0	*-17.8*	40000	34500	36100
	-5	*-20.6*	36000	30300	31800
	-10	*-23.3*	32200	26500	27900
	-15	*-26.1*	28700	22900	24400
	-20	*-28.9*	25400	19600	21000
	-25	*-31.7*	22300	16700	18000
	-30	*-34.4*	19400	14000	15200
	-35	*-37.2*	16700	11600	12600
	-40	*-40.0*	14300	9240	10200

Model KESB	Saturated Suction Temperature		Selection Capacity BTU/h 95°F *(35°C)* Ambient Temp		
			404/ 507	407A	448/ 449
	° F	° C			
KESB060L6 Compressor Model 4CES-6	0	*-17.8*	46100	41700	43500
	-5	*-20.6*	41500	36800	38400
	-10	*-23.3*	37200	32200	33800
	-15	*-26.1*	33100	28000	29600
	-20	*-28.9*	29300	24300	25700
	-25	*-31.7*	25700	20800	22300
	-30	*-34.4*	22400	17600	18900
	-35	*-37.2*	19300	14600	16000
	-40	*-40.0*	16400	11900	13100
KESB080L6 Compressor Model 4TES-9	0	*-17.8*	59900	55700	57400
	-5	*-20.6*	53600	48800	50600
	-10	*-23.3*	47700	42600	44300
	-15	*-26.1*	42100	36900	38500
	-20	*-28.9*	37000	31500	33200
	-25	*-31.7*	32200	26600	28400
	-30	*-34.4*	27700	22100	23800
	-35	*-37.2*	23600	17700	19700
	-40	*-40.0*	19800	13800	16000
KESB100L6 Compressor Model 4PES-12	0	*-17.8*	65300	60500	62400
	-5	*-20.6*	58300	52800	54700
	-10	*-23.3*	51700	45800	47700
	-15	*-26.1*	45500	39400	41200
	-20	*-28.9*	39800	33400	35300
	-25	*-31.7*	34400	27800	29900
	-30	*-34.4*	29400	22700	24900
	-35	*-37.2*	24800	18000	20400
	-40	*-40.0*	20500	13400	16100
KESB120L6 Compressor Model 4NES-14	0	*-17.8*	75300	70600	73200
	-5	*-20.6*	67700	62000	64500
	-10	*-23.3*	60500	54000	56600
	-15	*-26.1*	53700	46700	49400
	-20	*-28.9*	47400	40000	42700
	-25	*-31.7*	41400	33700	36500
	-30	*-34.4*	35800	27900	30900
	-35	*-37.2*	30600	22500	25700
	-40	*-40.0*	25700	17300	20800

CONDENSING UNITS

KEEPRITE REFRIGERATION

KES Condensing Units

SELECTION CAPACITY DATA

Low Temperature - COPELAND

Model KESA	Saturated Suction Temp.		Selection Capacity BTU/h 95°F *(35°C)* Ambient Temp		
			404/	407A	448/
	° F	° C	507		449
	0	*-17.8*	32700	28100	29600
	-5	*-20.6*	29300	24500	25700
KESA035L6	-10	*-23.3*	26100	21100	22300
	-15	*-26.1*	23100	18200	19200
Compressor	-20	*-28.9*	20300	15500	16500
Model	-25	*-31.7*	17600	13200	14100
2DF3F16KE	-30	*-34.4*	15200	11000	11900
	-35	*-37.2*	12900	8990	9860
	-40	*-40.0*	10800	6980	7940
	0	*-17.8*	36700	32600	34100
	-5	*-20.6*	33000	28700	30100
KESA040L6	-10	*-23.3*	29500	25100	26400
	-15	*-26.1*	26200	21600	22900
Compressor	-20	*-28.9*	23100	18500	19600
Model	-25	*-31.7*	20300	15600	16600
2DL3F20KE	-30	*-34.4*	17500	12900	14000
	-35	*-37.2*	15000	10500	11600
	-40	*-40.0*	12700	8380	9490
	0	*-17.8*	45000	40300	42100
	-5	*-20.6*	40600	35400	37000
KESA060L6	-10	*-23.3*	36400	30900	32300
	-15	*-26.1*	32400	26800	28100
Compressor	-20	*-28.9*	28700	23100	24400
Model	-25	*-31.7*	25100	19700	20800
2DB3F25KE	-30	*-34.4*	21800	16700	17500
	-35	*-37.2*	18600	13900	14400
	-40	*-40.0*	15700	11100	11100
	0	*-17.8*	49200	45000	47100
	-5	*-20.6*	44600	39600	41500
KESA061L6	-10	*-23.3*	40100	34500	36200
	-15	*-26.1*	35800	29900	31400
Compressor	-20	*-28.9*	31800	25700	27000
Model	-25	*-31.7*	28000	21800	23100
3DA3F28KE	-30	*-34.4*	24500	18200	19500
	-35	*-37.2*	21200	14700	16400
	-40	*-40.0*	18200	11300	13500
	0	*-17.8*	56000	52700	55000
	-5	*-20.6*	50900	46400	48500
KESA075L6	-10	*-23.3*	46000	40800	42600
	-15	*-26.1*	41300	35700	37400
Compressor	-20	*-28.9*	36800	30900	32400
Model	-25	*-31.7*	32600	26500	27900
3DB3F33KE	-30	*-34.4*	28600	22300	23600
	-35	*-37.2*	24800	18200	19600
	-40	*-40.0*	21200	14100	15800
	0	*-17.8*	72300	69000	72200
	-5	*-20.6*	65300	60600	63600
KESA090L6	-10	*-23.3*	58600	52900	55700
	-15	*-26.1*	52300	45900	48400
Compressor	-20	*-28.9*	46400	39500	41700
Model	-25	*-31.7*	40800	33600	35600
3DF3F40KE	-30	*-34.4*	35600	28000	30000
	-35	*-37.2*	30800	22800	24900
	-40	*-40.0*	26400	17600	20100

Model KESA	Saturated Suction Temp.		Selection Capacity BTU/h 95°F *(35°C)* Ambient Temp		
			404/	407A	448/
	° F	° C	507		449
	0	*-17.8*	78500	74300	77800
	-5	*-20.6*	71300	65400	68600
KESA100L6	-10	*-23.3*	64500	57200	60100
	-15	*-26.1*	58000	49700	52300
Compressor	-20	*-28.9*	51800	42700	45000
Model	-25	*-31.7*	46000	36300	38500
3DS3F46KE	-30	*-34.4*	40500	30300	32600
	-35	*-37.2*	35300	24600	26900
	-40	*-40.0*	30500	19100	21600
	0	*-17.8*	88400	81900	85700
	-5	*-20.6*	79400	72300	75700
KESA120L6	-10	*-23.3*	71100	63300	66200
	-15	*-26.1*	63500	54700	57200
Compressor	-20	*-28.9*	56500	46600	48900
Model	-25	*-31.7*	49900	39200	41200
4DANF47KE	-30	*-34.4*	43500	32200	34100
	-35	*-37.2*	37400	25800	27800
	-40	*-40.0*	31200	20000	22300
	0	*-17.8*	95800	89100	93200
	-5	*-20.6*	86200	78800	82400
KESA130L6	-10	*-23.3*	77300	69000	72100
	-15	*-26.1*	69100	59600	62400
Compressor	-20	*-28.9*	61500	50900	53300
Model	-25	*-31.7*	54300	42700	44900
4DBNF54KE	-30	*-34.4*	47500	35100	37300
	-35	*-37.2*	40800	28100	30300
	-40	*-40.0*	34100	21800	24400
	0	*-17.8*	110000	100000	104000
	-5	*-20.6*	99200	89500	93200
KESA150L6	-10	*-23.3*	89400	79200	82600
	-15	*-26.1*	80300	69500	72700
Compressor	-20	*-28.9*	71700	60400	63300
Model	-25	*-31.7*	63600	51800	54300
4DHNF63KE	-30	*-34.4*	55800	43800	45700
	-35	*-37.2*	48200	36300	37300
	-40	*-40.0*	40600	29500	29100
	0	*-17.8*	126000	125000	130000
	-5	*-20.6*	115000	110000	114000
KESA220L6	-10	*-23.3*	104000	96100	100000
	-15	*-26.1*	94400	83400	87400
Compressor	-20	*-28.9*	84600	72000	75700
Model	-25	*-31.7*	75200	62100	64800
4DJNF76KE	-30	*-34.4*	66100	53600	54500
	-35	*-37.2*	57100	46500	44400
	-40	*-40.0*	48400	41300	34400

CONDENSING UNITS

KEEPRITE REFRIGERATION

PRODUCT DATA & SPECIFICATIONS

Bulletin K40-KM-PDS-9
Part # 1092981

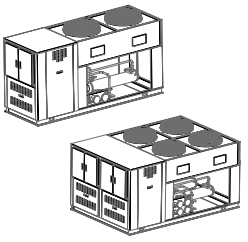

INCLUDES RATINGS FOR LOW GWP REFRIGERANTS

PRODUCT SUPPORT *scan:*
web: www.k-rp.com/km
email: mdcu-lgcu@k-rp.com
call: 1-844-893-3222 x522

KM-Line Condensing Units

Outdoor Air-Cooled Semi-Hermetic Condensing Units

6 to 44 HP -
High, Medium and Low Temperature Refrigeration

60 Hz

PRODUCT DATA & SPECIFICATIONS

Bulletin K40-KQD-PDS-2
Part # 1110230

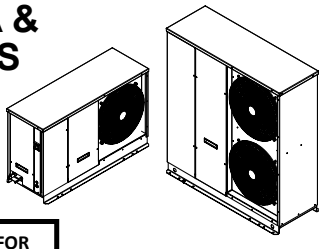

INCLUDES RATINGS FOR LOW GWP REFRIGERANTS

PRODUCT SUPPORT *scan:*
web: **www.k-rp.com/kq**
email: **smcu@k-rp.com**
call: **1-844-893-3222 x521**

KQ New Generation "D" Condensing Units

Outdoor Air-Cooled Condensing Units

1/2 to 6 HP -
High, Medium and Low Temperature Refrigeration

60 Hz

PRODUCT DATA & SPECIFICATIONS

Bulletin K40-KV-A-PDS-24, K40-KV-B-PDS-24
Part # 1073950-A, 1073950-B

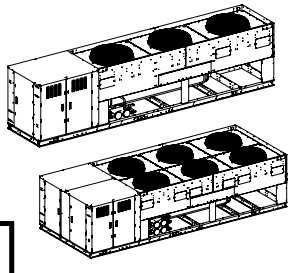

INCLUDES RATINGS FOR LOW GWP REFRIGERANTS

PRODUCT SUPPORT *scan:*
web: www.k-rp.com/kv
email: mdcu-lgcu@k-rp.com
call: 1-844-893-3222 x522

KV-Line Condensing Units

Outdoor Air-Cooled Condensing Units

5 to 100 HP - High and Medium Temperature Refrigeration
10 to 80 HP - Low Temperature Refrigeration

60 Hz

KEEPRITE REFRIGERATION

PRODUCT DATA & SPECIFICATIONS

Bulletin K40-KW-PDS-18
Part # 1064612



INCLUDES RATINGS FOR LOW GWP REFRIGERANTS

PRODUCT SUPPORT *scan:*
web: www.k-rp.com/kw
email: rcu-wccu@k-rp.com
call: 1-844-893-3222 x523

KW-Line Condensing Units

Indoor Water Cooled Condensing Units

1/2 to 40 HP -
High, Medium and Low Temperature Refrigeration

60 Hz

PRODUCT DATA & SPECIFICATIONS

Bulletin K40-KXC-PDS-3
Part # 1107224



INCLUDES RATINGS FOR LOW GWP REFRIGERANTS

PRODUCT SUPPORT *scan:*
web: www.k-rp.com/kx
email: rcu-wccu@k-rp.com
call: 1-844-893-3222 x523

KX-Line "C" Generation Condensing Units

Indoor Water Cooled Coaxial Hermetic, Scroll and Semi-Hermetic Condensing Units

1/2 to 6 HP -
High, Medium and Low Temperature Refrigeration

60 Hz

CONDENSERS

KEEPRITE REFRIGERATION

KCS SERIES AIR COOLED CONDENSERS

HORIZONTAL / VERTICAL AIR

- Refrigeration or Air Conditioning Duty
- Indoor or outdoor application
- 2 tons to 24 tons THR at 25 °F TD





KCM SERIES AIR COOLED CONDENSERS

HORIZONTAL / VERTICAL AIR

- Refrigeration or Air Conditioning Duty
- Indoor or outdoor application
- 9 tons to 49 tons THR at 25 °F TD



KCL SERIES AIR COOLED CONDENSERS

VERTICAL AIR

- Refrigeration or Air Conditioning Duty
- 7 to 270 Tons (R404A, 25ºF TD, 60 Hz)
- 1 to 14 Fan Models
- Single width and double width models available
- 550, 850, or 1140 RPM or EC motors



KCC SERIES CENTRIFUGAL FAN AIR COOLED CONDENSER

Ideal for conditions requiring flexible CFM and varied static pressures

- From 4 to 90 nominal tons THR
- Built to suit a wide range of applications by varying coil depth, fin spacing and air flow through the unit.
- Wide range of arrangements are available to meet installation requirements



SUSPENSION SYSTEMS

Channel

Channel Type	Channel Dimensions		Material & Thickness	LIST
	Height	Width	Steel	
P1000T/ E1000T	1-5/8" (41.3)	1-5/8" (41.3)	12 Ga. Slotted	$122.10
P1000 / E1000	1-5/8" (41.3)	1-5/8" (41.3)	12 Ga.	$192.00
P3300 / E3300	13/16" (20.6)	1-5/8" (41.3)	12 Ga.	
P3300T / E3300T	13/16" (20.6)	1-5/8" (41.3)	12 Ga. Slotted	$88.30

Also available in alum and stainless steel

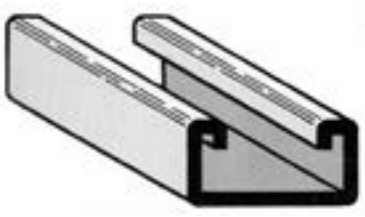

Channel Nuts

Part #	Description	LIST
P1008	spring nut 3/8" - 16	$3.10
TN-225	1/2" cone nut for connecting (1/2" - 13) rod to channel	$7.60
PS3500 (See Seismic)	rod stiffeners for channel	$19.30
K1063	3/8" Kwik nut/washer	$11.30

PS3500



K1063



SPRING NUT

Cush - A - Clamps

Part #	Copper & Steel Tubing OD Size	Tubing Size Nominal ID	LIST
HT04	1/4"	1/8"	$6.50
HT06	3/8"	1/4"	$6.50
HT08	1/2"	3/8"	$6.50
HT10	5/8"	1/2"	$6.90
HT12	3/4"	5/8"	
HT14	7/8"	3/4"	$8.10
HT18	1-1/8"	1"	
HT22	1-3/8"	1-1/4"	$11.00
HT26	1-5/8"	1-1/2"	$12.40
HT34	2-1/8"	2"	$112.20
HT42	2-5/8"	2-1/2"	
HT50	3-1/8"	3"	$36.10
HT58	3-5/8"	3-1/2"	$36.60
HT66	4-1/8"	4"	$64.90



* Temperature rating up to 340°F

Standard Finish: Yellow Zinc Chromate / Includes cushion, clamp, screw and nut Electrogalvanized, also available in stainless steel

- Endures both high (+300°F) and low (-40°F) temperatures
- Dampens vibration and noise
- Eliminates galvanic metal to metal contact
- Resists most industrial oils and solvents
- Reduces thermal loss and gain
- Secures tubing firmly to the channel (strut)

Pipe Clamp

Part #	OD Size	LIST	Part #	OD Size	LIST	Part #	OD Size	LIST
P2024	1/4"	$7.80	P2035	1-5/8"	$10.20	P2055	4-1/8"	$41.40
P2025	3/8"	$8.60	P2037	1-7/8"	$14.30	P2059	4-5/8"	$50.90
P2026	1/2"	$8.60	P2038	2"	$15.40	P1115	1-1/2" IPS	$12.70
P2027	5/8"	$8.70	P2039	2-1/8"	$17.80	P1117	2" IPS	$13.30
P2028	3/4"	$8.70	P2040	2-1/4"	$18.70	P1118	2-1/2" IPS	$16.40
P2029	7/8"	$9.10	P2043	2-5/8"	$19.70	P1119	3" IPS	$22.40
P2030	1"	$9.60	P2044	2-3/4"	$21.40	P1120	3-1/2" IPS	$40.00
P2031	1-1/8"		P2047	3-1/8"	$22.10	P1121	4" IPS	$40.70
P2032	1-1/4"	$10.10	P2048	3-1/4"	$23.90	P1123	5" IPS	$43.60
P2033	1-3/8"	$10.20	P2051	3-5/8"	$29.30	P1124	6" IPS	$49.20
P2034	1-1/2"	$10.20						

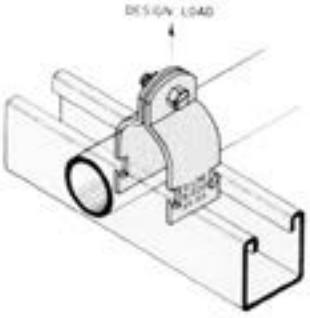

SUSPENSION SYSTEMS

MU Pipe Clamps (One piece)

Part #	OD TUBING (COPPER/ STEEL)	NOM. PIPE (IP/RIGID CONDUIT)	LIST
MU025	3/8"	1/4"	$6.30
MU037	1/2"	3/8"	$6.80
MU050	5/8 & 3/4	1/2"	$7.50
MU075	7/8"	3/4"	$10.40
MU100	1-1/8"	1"	$12.00
MU125	1-3/8"	1-1/4"	$12.30

Part #	OD TUBING (COPPER/ STEEL)	NOM. PIPE (IP/RIGID CONDUIT)	LIST
MU150	1-5/8"	1-1/2"	$14.80
MU200	2-1/8"	2"	$19.60
MU250	2-5/8"	2-1/2"	$26.40
MU300	3-1/8"	3"	$31.70
MU350	3-5/8"	3-1/2"	$38.10
MU400	4-1/8"	4"	$32.20



Copper Tube Strap - 2-Hole

Part #	Size	LIST
A1203	1/4"	$1.10
A1278	3/8"	$1.10
A1366	1/2"	$1.10
A2529	5/8"	$1.10
A1467	3/4"	$1.10
A2574	7/8"	$1.90
A2614	1-1/8"	$2.00
A2650	1-3/8"	$2.20
A2675	1-5/8"	$2.80
A2708	2-1/8"	$3.20

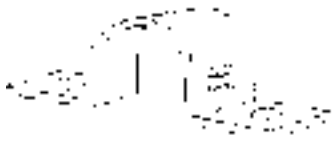

Adjustable Swivel Pipe Hangers (Galvinized or Coated Copper)

Part # (S*)	Part # (C*)	Nominal Tubing Size	Rod Size "A"	LIST(S*)	LIST(C*)
41-1/2	42-1/2	1/2"	3/8" - 16	$3.10	
41-3/4	42-3/4	3/4"	3/8" - 16	$3.10	$6.40
41-1	42-1	1"	3/8" - 16	$1.60	$3.80
41-1-1/2	42-1-1/2	1-1/2"	3/8" - 16	$3.10	$7.80
	42-1-1/4	1-1/4"	3/8" - 16		$6.80
41-2	42-2	2"	3/8" - 16	$3.90	$11.70
41-2-1/2	42-2-1/2	2-1/2"	3/8" - 13	$8.30	$16.00
41-3	42-3	3"	3/8" - 13	$8.90	$20.20
41-4	42-4	4"	3/8" - 13		$22.40
41-5		5"	3/8" - 13	$22.50	
41-6		6"	3/8" - 13	$28.20	
S*= Standard C*= Coated					

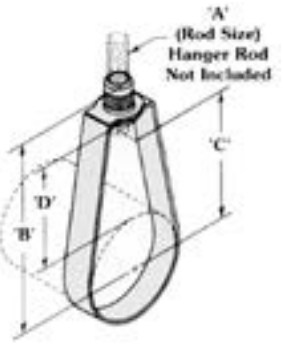

All Round Suspension Strap

Part #	Material	Size & Gauge	Feet per coil	LIST
3/4-25-GALV	Galv.	3/4 24 GA	25	$15.20
1/2-25	Copper	1/2 22 GA	25	$71.00
3/4-25	Copper	3/4 24 GA	25	$61.60
1/2-25-GALV	Galv.	1/2 22 GA	25	$12.60



SUSPENSION SYSTEMS

Side Beam Angle Bracket

Part #	Rod Size "A"	Rod Size "B"	Rod Size "C"	LIST
P1026	7/16"	2-3/16"	2"	

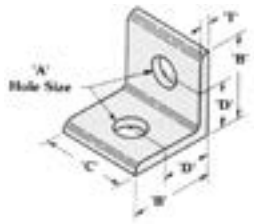

Ceiling Flange

Part #	Thread Size "A" Rod	LIST
28R-3/8(B3199R-3/8)	3/8" - 16	$7.80
28R-1/2(B3199R-1/2)		$9.80

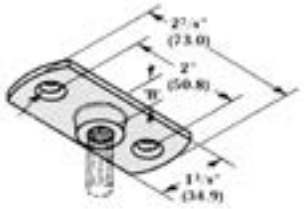

Q Deck Hanger

Part #	Description	LIST
QD-3/8	Q Deck Hanger	$12.20



Coach Screw Rod

Part #	Thread Size "A"	Standard Rod Lengths	LIST
B3213 - 3/8- 3	3/8	3-1/2	$2.30
B3213 - 3/8 - 8	3/8	8	$3.50
B3213 - 3/8 -12	3/8	12	$5.60

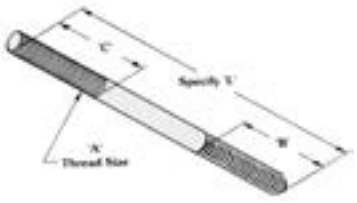

Maleable Iron C-Clamp

Part # (with locknut)		Rod Size "A"	Rod Size "B"	Rod Size "C"	LIST
301-3/8	B3036L-3/8	3/8" - 16	1-3/4"	1-3/4"	$7.60
301-1/2	B3036L-1/2	1/2" - 3	1-3/4"	1-3/4"	

Wide Mouth Top Beam C-Clamp

Part #	Rod Size "A"	Rod Size "B"	Rod Size "C"	LIST
407-3/8	3/8" - 16	2-1/8"	1-15/16"	-

Top Beam C-Clamp

Part #	Rod Size "A"	Rod Size "B"	Rod Size "C"	LIST
406-3/8	3/8" - 16	1-7/16"	1-3/4"	$6.60

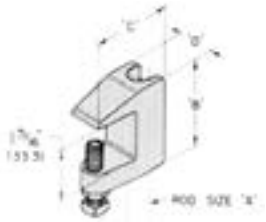

Setscrew and Locknut included.

FASTENERS

All Threaded Rod

Part #	Threads Per Inch	LIST
1/4 - 3FT - PLTD	20	$2.60
1/4 - 10FT - PLTD	20	$7.90
3/8 - 3FT - PLTD	16	$6.30
3/8 - 10FT - PLTD	16	$17.70
1/2 - 10FT - PLTD	13	$29.60



Rod Coupling

Part #	Alt #	LIST
141-914	CN-1/4	$0.50
141-918	CN-3/8	$1.40
141-922	CN-1/2	$2.50

*25/PACK





Nuts

Part #	Description	LIST
083-014	ZINC HEX NUT 1/4 - 100PK	$6.50
087-016	ZINC HEX NUT 5/16" - 100/PK	$11.00
087-018	ZINC HEX NUT 3/8" - 100/PK	$16.50
083-022	ZINC HEX NUT 1/2 50/PK	$15.40
087-024	ZINC HEX NUT 5/8 - 25/PK	$19.10







Washers

Part #	Description	LIST
148-014	PAULIN FLAT WASHER 1/4 - 100PK	$7.50
148-016	FLAT WASHER - 5/16 - 100/PK	$10.70
148-018	FLAT WASHER - 3/8" - 100/PK	$12.70
148-022	PAULIN FLAT WASHER 1/2 - 100PK	$15.10
157-014	PAULIN LOCKWASHER 1/4 - 100PK	$4.60
157-016	PAULIN LOCKWASHER 5/16 - 100PK	$6.20
157-018	LOCKWASHER 3/8" - 100/PK	$8.30
162-393	PAULIN FENDER WASHER 3/16 X 1 - 100PK	$12.90
162-395	FENDER WASHER 1/4X1-1/4 100/PK	$17.30
162-397	LILY FENDERWASHER 5/16 X 1-1/4	$17.40
162-398	PAULIN FENDERWASHER 3/8 X 1-1/2 100PK	$22.80
162-400	FENDER WASHER 1/2X2 100/PK	$45.10
WASHER KITS		
39516	HEX NUT KIT	$92.70
020-047	PAULIN LOCK-WASHER KIT	$46.60
020-057	PAULIN FENDER WASHER KIT	$57.20



Lag Bolts

Part #	Description	LIST
135-316	ZINC LAG BOLT 1/4 X 2	$0.30
135-451	ZINC LAG BOLT 5/16 X 2	$0.40
135-453	ZINC LAG BOLT 5/16 X 2-1/2	$0.80
135-455	ZINC LAG BOLT 5/16 X 3	$0.60
135-459	ZINC LAG BOLT 5/16 X 4	$0.90
135-500	ZINC LAG BOLT 3/8 X 3	$1.10









Also available in various sizes but not listed:

- machine screws
- capscrews
- lock nuts
- lock washers
- nyloc nuts
- coach screws
- lag bolts
- concrete inserts
- unistrut accesories
- wall anchors

Find these in plastic, zinc or stainless steel depending on availability and application.

SUSPENSION SYSTEMS

Seismic Restraints



Seismic Kit

Part #	Description	LIST
1/8-SEISMIC-KIT-ASE	400 lb load limit seismic kit c/w 4-10 ft. cables with 1 completed end, 4 brackets & buckles	$134.40
3/16-SEISMIC-KIT-ASE		$218.40

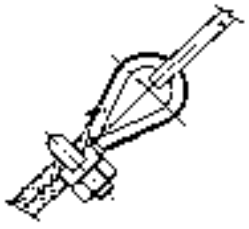

Seismic Angle Bracket

Part #	A	LIST
P1546-UBS	45°	$12.30
PS3500-ASE	Rod Stiffener 3/8 - 5/8 rod	$19.30

WIRE ROPE & ACCESSORIES

High Strength Cable with Zinc Finish

Part #	Size (in.)	Type Const.	Working Load Limit (lb)	LIST
7000427	1/8	7 x 7	340	$0.50
7000627	3/16	7 x 19	840	$1.00



Wire Rope Clips & Thimbles (malleable iron, zinc plated)

Part #	Size (in.)	Description	LIST
B7670419	1/8	wire rope clips	$0.70
B7670429	3/16	wire rope clips	$1.10
B7670439	1/4	wire rope clips	$1.80
B7670609	1/8	wire rope thimbles	$0.70
B7670619	3/16	wire rope thimbles	$0.80
B7670629	1/4	wire rope thimbles	$0.70



Wire Rope & Cable Cutter

Part #	Description	LIST
95-61-190-SBA	• Blades prevent wire rope from fanning out, and allows for burr free cutting • Cuts medium hard wire cables up to 6mm in diameter	$217.50



ACOUSTIC ISOLATORS

Spring Isolators - Ceiling Mount

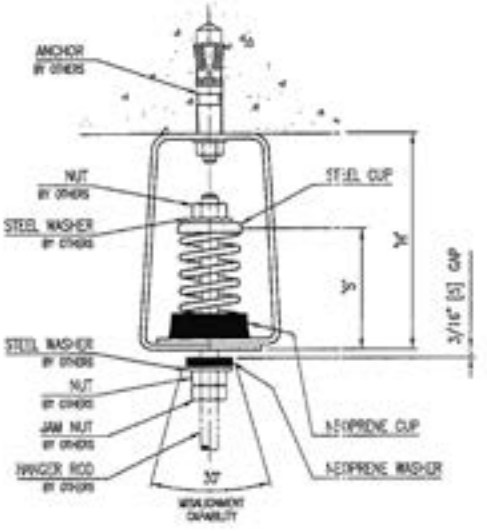

Hanger Type	A		S		H	
	in	mm	in	mm	in	mm
SHA	2.63	67	3.50	89	5.25	133
SHB	4.75	120	5.00	1.27	7.00	178

Part #	Max Load		Max Defection		Spring Constant		Spring Color	LIST
	lb	kg	in	mm	lb/in	kg/mm		
SHA-25	25	11	1.2	30	21	0.4	Black	$77.30
SHA-50	50	23	1.3	33	38	0.7	Beige	$77.30
SHA-100	100	45	1.3	33	77	1.4	Red	$77.30
SHA-250	250	113	1.3	33	192	3.4	White	$77.30
SHB-200	440	200	1.0	25	440	8.0	White	$124.30

ANCHORS

Drop-In Anchors



Part #	Size	LIST
227-200	1/4	$1.30
227-202	3/8	$1.50
227-204	1/2	$3.60

Setting Tool (for drop-in anchor)



Part #	Size	LIST
227-210	1/4	$19.20
227-212	3/8	$41.30

Lag Screw Shields



Part #	Size	LIST
135-810	3/8 Long	$7.70

Lead Shields



Part #	Size	LIST
135-838	10-12-14 x 1	$1.60

*100/Pack

Wedge Anchors



Part #	Size	LIST
227-150	3/8 x 2-3/4	$3.60
227-152	3/8 x 3	$2.20
227-154	3/8 x 3-3/4	$2.50

Hangermate Anchors



Part #	Size	LIST
59616E	3/8" for metal	
59617E	3/8 concrete/wood	

Sleeve Anchors



Part #	Size	LIST
227-180	Hex nut 3/8 x 1-7/8	$3.40
227-182	3/8 x 3	$4.30

Concrete Inserts & Anchors



Part #	Description	LIST
537-346	PLASTIC ANCHOR - 450PK	$37.40
537-355	E-Z WALL ANCHOR 8-10 - 350PK	$65.40
537-356	E-Z ANCHOR(NYLON) 150/PACK	$60.20
537-357	E-Z ANCHOR(ZINC) 150/PACK	$104.00

Plastic Anchors



Part #	Size	Box Qty	LIST
227-046	6-8	100	$10.40
227-050	10-12	100	$12.40
227-054	14-16	50	$9.90

COPPER TUBING

ACR Copper Tubing (12 and 20 ft. lengths)

ACR copper tubing - hard temper - is ideal for refrigeration and air conditioning installations. It is cleaned, dried and sealed with pressure tight plugs, each length mates perfectly with wrot copper or cast brass fittings for easy-to-make, trouble free solder joints.

Size O.D.	Wall	RATED INTERNAL WORKING PRESSURE (PSIG)	
		200°F	400°F
1/4-ACR			
3/8-ACR	.030	729	456
1/2-ACR	.035	623	389
5/8-ACR	.040	577	361
3/4-ACR	.042	505	316
7/8-ACR	.045	466	291
1-1/8-ACR	.050	395	247
1-3/8-ACR	.055	351	219
1-5/8-ACR	.060	327	204
2-1/8-ACR	.070	291	182
2-5/8-ACR	.080	269	168
3-1/8-ACR	.090	254	159
3-5/8-ACR	.100	243	152
4-1/8-ACR	.110	235	147



Seamless Soft Copper Tubing (50 ft. coils)

Our dehydrated and sealed copper tubing is of excellent quality and of a consistent dead soft temper. Each coil is bright and thoroughly dried, packaged in individual cartons and clearly labelled as to length, size, etc.
You may be sure that this tubing contains no moisture or particles of foreign matter that may cause trouble or inconvenience in a refrigerating system. All dehydrated seamless soft copper tubing is furnished in coils of 50 ft. lengths plus sealed ends. Tubing is available in OD sizes of 1/8" to 1-5/8", including some 16th inch sizes.

Size		Rated Internal Working Pressure (PSIG)		50 FT.	
O.D.	Wall	250°F	400°F	Coil Dia.	Wt/Coil
1/8-SD	.030	2459	1537	10-3/4	1.74
3/16-SD	.030	1548	968	11-3/4	2.88
1/4-SD	.030	1125	703	13-1/2	4.02
5/16-SD	.032	957	598	15-1/2	5.45
3/8-SD	.032	787	492	17	6.70
1/2-SD	.032	581	363	19-7/8	9.10
5/8-SD	.035	494	309	21-1/4	12.55
3/4-SD	.035	409	256	23-1/4	15.25
7/8-SD	.045	466	291	26-1/4	22.75
1-1/8-SD	.050	395	247	34-1/4	32.75
1-3/8-SD	.055	351	219	45	44.20
1-5/8-SD	.060	327	204	45	57.00



Copper Capillary Tubing

This capillary tubing, used to meter refrigerant flow, is of soft temper. Many manufacturers recommend specific lengths and diameters of capillary tubing for their units, but these specific tube sizes are not always readily available to the serviceman. A capillary tube length conversion chart is available in the references section at the back of this catalog.

Model No.	Dia I.D	OD	Model No.	Dia I.D	OD	Model No.	Dia I.D	OD
TC26-16	.026	.072	TC50-11	.050	.114	TC75-9	.075	.125
TC31-12	.031	.083	TC54-11	.054	.106	TC80-10	.080	.145
TC36-12	.036	.087	TC55-11	.055	.125	TC85-9	.085	.145
TC42-12	.042	.093	TC59-10	.059	.112	TC90-7	.090	.145
TC44-12	.044	.109	TC64-10	.064	.125	TC100-10	.100	.156
TC49-11	.049	.099	TC70-12	.070	.125			

Please call your local branch for pricing

PIPE INSULATION

Black Pipe Insulation (available in white colour)

Tubing Insulation Size (ID)	3/8" Wall ID			1/2" Wall ID			3/4" Wall ID			1" Wall ID		
	Lengths per ctn	Part #	LIST (/ 6ft)	Lengths per ctn	Part #	LIST (/ 6ft)	Lengths per ctn	Part #	LIST (/ 6ft)	Lengths per ctn	Part #	LIST (/ 6ft)
1/4"	100	3/8W-1/4	$59.30	45	1/2W-1/4	$20.80	45	3/4W-1/4	$31.80	35	1W-3/4	$59.50
3/8	100	3/8W-3/8	$15.10	75	1/2W-3/8	$22.90	40	3/4W-3/8	$34.60	30	1W-3/8	$63.70
1/2	80	3/8W-1/2	$16.20	66	1/2W-1/2	$24.40	38	3/4W-1/2	$37.60	24	1W-1/2	$68.80
5/8	65	3/8W-5/8	$18.60	54	1/2W-5/8	$26.90	28	3/4W-5/8	$41.00	20	1W-5/8	$73.20
3/4	55	3/8W-3/4	$19.70	44	1/2W-3/4	$27.80	23	3/4W-3/4	$44.90	15	1W-3/4	$81.10
7/8	50	3/8W-7/8	$20.70	35	1/2W-7/8	$30.10	22	3/4W-7/8	$48.90	15	1W-7/8	$90.30
1-1/8	35	3/8W-1-1/8	$23.50	28	1/2W-1-1/8	$33.70	16	3/4W-1-1/8	$59.80	13	1W-1-1/8	
1-3/8	30	3/8W-1-3/8	$26.70	20	1/2W-1-3/8	$37.00	12	3/4W-1-3/8	$68.30	10	1W-1-3/8	$127.10
1-5/8	20	3/8W-1-5/8	$33.00	15	1/2W-1-5/8	$42.60	10	3/4W-1-5/8	$90.70	8	1W-1-5/8	$141.00
2-1/8	16	3/8W-2-1/8	$39.30	10	1/2W-2-1/8	$54.40	9	3/4W-2-1/8	$110.20	6	1W-2-1/8	$169.60
2-5/8	12	3/8W-2-5/8	$59.30	10	1/2W-2-5/8	$73.40	8	3/4W-2-5/8	$139.30	6	1W-2-5/8	$239.50
3-1/8	9	3/8W-3-1/8	$72.80	7	1/2W-3-1/8	$86.20	7	3/4W-3-1/8	$159.20	5	1W-3-1/8	$290.20
3-5/8				6	1/2W-3-5/8	$113.70	5	3/4W-3-5/8	$193.00	4	1W-3-5/8	$317.00
4-1/8				4	1/2W-4-1/8	$125.80	4	3/4W-4-1/8	$207.90	3	1W-4-1/8	$372.00

*** INSULATION IS AVAILABLE IN WHITE COLOUR**
*** INSULATION IS ALSO AVAILABLE IN 1-1/2" & 2" WALL ID**
*** CONTACT YOUR LOCAL BRANCH FOR MORE INFORAMTION**

COPPER TUBING/ FITTINGS 199-247

Sheet Insulation



Model No. (in.)	Sheets per ctn	LIST (per sheet)
1/4W-36-48	24	$100.20
3/8W-36-48	16	$132.10
1/2W-36-48	12	$139.70
3/4W-36-48	8	$210.00
1W-36-48	6	$254.20
3/4W-48-50FT	roll (200 sqft)	$3,499.00

FLAMMABILITY TENDENCIES:

Armacell insulations have been evaluated for typical flame-spread classification and smoke-developed rating by ASTM E 84-(84A) Method of Test for "Surface-Burning Characteristics of Building Materials"**

- Armacell Pipe Insulation in thicknesses of 1" or less has a flame-spread rating of 25 or less and a smoke-developed rating of 50 or less
- Armacell Sheet Insulation in thicknesses of 3/4" or less has a flame-spread rating of 25 or less and a smoke-developed rating of 50 or less. 1" Armacell sheet has a flame-spread rating of 25 or less and a smoke-developed rating of 200 or less.

** Numerical flammability ratings alone may not define the performance of products under actual fire conditions. They are provided only for use in the selection of products to meet limits specified.

520 Adhesive

Model No.	LIST
520-1/2PT-BT	$25.00
520-1PT-BT	$38.20
520-1QT	$60.50
520-1GAL	$209.50



520 Black Low Voc Adhesive

Model No.	LIST
520-BLV-1PT-BT	$53.20



Armacell Water Base Finish



Model No.	Description	LIST
WBF8530005-INS	**1 Quart**	$98.50
WBF8530006-INS	**1 Gallon**	$303.00

ArmaFlex® Shield

Continuous Coil Pipe Insulation

New ArmaFlex® Shield flexible foam insulation is a moistureresistant and UV-resistant product with a durable protective jacket specially designed for line set, HVAC and refrigeration applications. This tough coating can take the abuse of challenging installations and stands up to extreme elements like UV, heat and cold, making it a great choice for outdoor applications.

- Protection against thermal losses, condensation and moisture ingress
- Meets code requirements for installation in plenums
- Comes in continuous coils for fast installation with fewer seams

Wall (inches)	1/2" (13 mm)	3/4" (19 mm)
ID (inches)	1/4", 3/8", 1/2", 5/8", 3/4", 7/8" and 1-1/8" (6, 10, 13, 16, 19, 22, 28 mm)	3/8", 1/2", 5/8", 3/4", 7/8" and 1-1/8" (6, 10, 13, 16, 19, 22, 28 mm)
Length (feet) corresponds to ID above	1/4" = 155', 3/8" = 115', 1/2" = 105', 5/8" = 95', 3/4" = 85', 7/8" = 75', 1-1/8" = 55'	3/8" = 80', 1/2" = 70', 5/8" = 60', 3/4" = 40', 7/8" = 40', 1-1/8" = 35'

Typical Properties

Property	Value	Test Method
Flame Spread and Smoke Developed Index through 1" wall thickness	25/50 rated	ASTM E 84 CAN ULC S102.2*

* CAN ULC S102.2 for up to 3/4" wall thickness.







SHUR-FIT

Aluminum Jacketed Insulation Protection System

Shur-Fit has developed this new product to protect exposed insulation in outdoor applications and harsh environments.

The product is available in smooth or textured (stucco) finish in a variety of sizes for a multitude of applications.

Contact Your Local Branch For Pricing and Availability

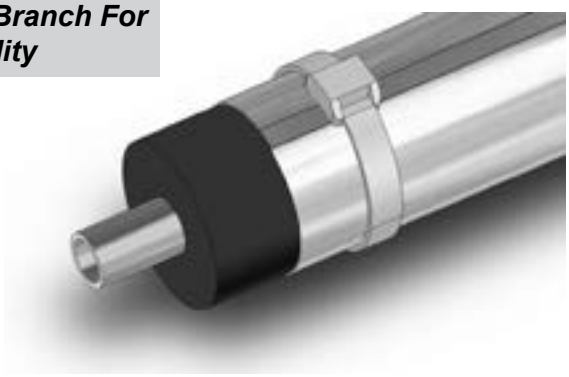

Small Dia. Aluminum Jacketing



Part #	Description	LIST
313.02.016	1-7/8" od max x 12" length	$6.10
313.04.016	2-3/8" od max x 18" length	$9.10
313.06.016	2-7/8" od max x 18" length	$9.10

Small Dia. Aluminum 90° & 45° Elbows



Part #	Description	LIST
314.02.90-PPF	90deg. Elbow cover up to 1-7/8"od	$25.80
314.04.90-PPF	90deg. Elbow cover up to 2-3/8"od	$25.80
314.06.90-PPF	90deg. Elbow cover up to 2-7/8"od	$25.80

Small Dia. Aluminum Tees



Part #	Description	LIST
314.03.T-PPF	This "T" fits 313.01/02/03.016	$71.50
314.06.T-PPF	This "T" fits 313.04/05/06.016	

Low Profile Tie Strap

Part #	Description	LIST
106.44.SS-PPF	SRFT CABLE TIES 3-1/2 INCH OD 100PK	$177.30

- Other sizes are available on request, 3-4 day delivery
- The larger the size of the diameters allows for longer length
- This product is sold by the length not the foot

INSULATED PIPE SUPPORTS

INSUGUARD

Insuguard

- Designed to accommodate movement of the pipes generated by thermal expansion and vibration
- Allows the pipe to slide easily in the protector
- Fits the standard channel used in the industry
- Protects your piping system and improves its appearance

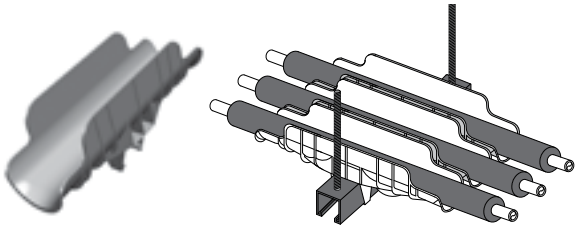

INSUGUARD

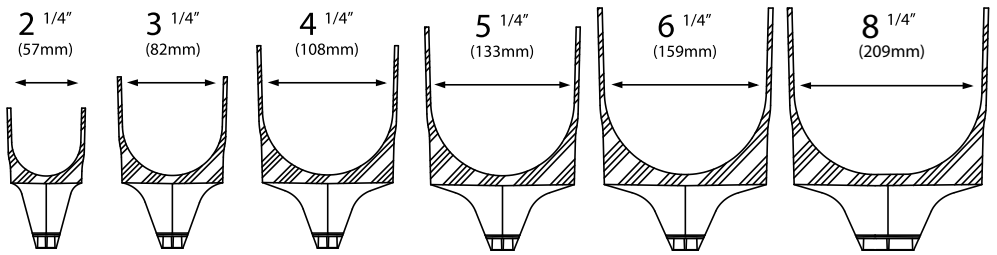

Part #	Alt #	Description	LIST
225B	I225B	Black Insuguard saddle 2 1/4" (57mm)	$13.90
325B	I325B	Black Insuguard saddle 3 1/4" (82mm)	$16.60
425B	I425B	Black Insuguard saddle 4 1/4" (108mm)	$17.90
525B	I525B	Black Insuguard saddle 5 1/4" (133mm)	$19.10
625B	I625B	Black Insuguard saddle 6 1/4" (159mm)	$22.70
825B	I825B	Black Insuguard saddle 8 1/4" (209mm)	$33.20
225W	I225W	White Insuguard saddle 2 1/4" (57mm)	$13.90
325W	I325W	White Insuguard saddle 3 1/4" (82mm)	$16.60
425W	I425W	White Insuguard saddle 4 1/4" (108mm)	$17.90
525W	I525W	White Insuguard saddle 5 1/4" (133mm)	$19.10
625W	I625W	White Insuguard saddle 6 1/4" (159mm)	$22.70
825W	I825W	White Insuguard saddle 8 1/4" (209mm)	$33.20

InsuClip

The dual-strap fasteener is first fixed to the pipe and then easily slid inside the Clevis Hanger upper space where it is attached to the cross-bolt. Both plastic straps are easily tightened and securely locked into place, just like you would do with a tie-wrap. The InsuClip fastener will not interfere with the swinging movement of the lower U-shaped metal strap as it is only attached to the cross-bolt.

* Consult with local branch for further information and pricing.



INSULATED PIPE SUPPORTS

INSUGUARD



InsuguardMulti®

- Allow use on various sizes of strut, Clevis, steel angle, H-Beam/I-Beam mountings and floor adaptor.

Part #	Alt #	Description	LIST
IM250G		Grey InsuguardMulti saddle 2 1/2” (60mm)	$13.10
IM350G		Grey InsuguardMulti saddle 3 1/2” (88mm)	$18.90
IM450G		Grey InsuguardMulti saddle 4 1/2” (114mm)	$21.50
IM550G		Grey InsuguardMulti saddle 5 1/2” (140mm)	$31.60
IM650G		Grey InsuguardMulti saddle 6 1/2” (165mm)	$31.60
IM850G		Grey InsuguardMulti saddle 8 1/2” (219mm)	$39.90
IM1050G		Grey InsuguardMulti saddle 10 1/2” (271mm)	$62.40
IM1250G		Grey InsuguardMulti saddle 12 1/2” (321mm)	$71.40
CL200EG*		Clevis Hanger (Require: 3/8" Reddi Rod)	$15.30
CL300EG*		Clevis Hanger (Require: 1/2" Reddi Rod)	$22.60
CL400EG*		Clevis Hanger (Require: 5/8" Reddi Rod)	$21.20
INSUGUARD Multi Adaptors**			
IM42X42	IM42X42G	Grey strut adaptor 1 5/8” (42mm) x 1 5/8” (42mm)	$4.00
IM2-5/8	IM2-5/8G	Grey steel angle adaptor opens from 1/2” to 2 5/8” (13mm to 87mm)	$15.30
IMCLEVIS	IMCLEVISG	Grey Clevis Hanger adaptor	$4.00
IMSTAB1050G		Grey strut stabilizer for IM1050G saddle	
IMSTAB1250G		Grey strut stabilizer for IM1250G saddle	

** Consult with local branch for requirements and pricing.*
*** Insugaurd adaptors are available in a multitude of configurations to mount the Insugaurd saddles on all sized of Strut, beams, decking and even the floor, please contact your local branch for pricing and availability.*

InsuCover

Insugaurd top covers are available to fit all sizes of saddles

* Consult with local branch for further information and pricing.



SHOCKTECH

Water hammer problems create extensive piping damages in various industries. The magnetic shock detection device is a great tool to help maintenance crew detecting water hammer areas BEFORE pipe damage occurs.

* Consult with local branch for further information and pricing.



COPPER FITTINGS

Coupling Rolled Stop C x C

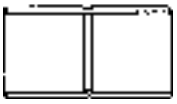

Part #	Size	Pcs / Pkg	LIST
W1000	1/8	100	$4.20
W1001	3/16	100	$1.80
W1003	1/4	100	$1.80
W1009	3/8	50	$1.60
W1017	1/2	50	$1.90
W1022	5/8	100	$1.50
W1028	3/4	25	$4.60
W1034	7/8	50	$3.00
W1047	1-1/8	25	$6.60
W1055	1-3/8	25	$10.90
W1063	1-5/8	10	$14.40
W1072	2-1/8	1	$54.30
W1082	2-5/8	1	$78.60
W1092	3-1/8	1	$147.50
W10100	3-5/8	1	$178.70
W10107	4-1/8	1	

90° ELL Short Radius C x C



Part #	Size	Pcs / Pkg	LIST
W2003	1/4	50	$6.00
W2009	3/8	50	$5.80
W2017	1/2	50	$6.00
W2022	5/8	100	$6.80
W2028	3/4	50	$11.20
W2034	7/8	50	$12.20
W2047	1-1/8	25	$16.40
W2084	1-3/8	25	$18.10
W2085	1-5/8	10	$663.00
W2086	2-1/8	10	$45.50
W2087	2-5/8	5	$95.90
W2088	3-1/8	5	$128.20
W2089	3-5/8	2	$448.00
W2090	4-1/8	2	$328.00
W2097	6-1/8	1	$3,278.00

90° ELL Short Radius Street FTG x C



Part #	Size	Pcs / Pkg	LIST
W2305	1/4	50	$10.30
W2312	3/8	50	$10.20
W2321	1/2	50	$7.70'
W2326	5/8	50	$8.60
W2330	3/4	25	$11.50
W2334	7/8	25	$14.00
W2344	1-1/8	25	$16.90
W2384	1-3/8	25	$25.70
W2385	1-5/8	10	$33.70
W2386	2-1/8	10	$125.30
W2387	2-5/8	5	$369.00
W2388	3-1/8	2	$1,423.00
W2389	3-5/8	1	$798.00
W2390	4-1/8	2	$798.00

90° ELL Long Radius C x C



Part #	Size	Pcs / Pkg	LIST
W2701	3/16	100	$32.20
W2715	1/4	50	$10.90
W2710	5/16	50	$11.20
W2716	3/8	50	$8.60
W2717	1/2	50	$11.40
W2722	5/8	50	$4.80
W2728	3/4	50	$7.80
W2734	7/8	25	$11.40
W2747	1-1/8	10	$20.20
W2055	1-3/8	10	$32.30
W2063	1-5/8	5	$43.30
W2072	2-1/8	5	$113.90
W2082	2-5/8	5	$180.30
W2092	3-1/8	2	$254.00
W2093	3-5/8	1	$810.00
W2095	4-1/8	1	$663.00

90° ELL Long Radius - Street FTG x C

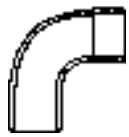

Part #	Size	Pcs / Pkg	LIST
W2809	3/8	50	$9.90
W2817	1/2	50	$18.90
W2822	5/8	50	$7.20
W2828	3/4	25	$8.70
W2834	7/8	25	$14.90
W2847	1-1/8	10	$28.90
W2350	1-3/8	10	$42.70
W2355	1-5/8	5	$59.40
W2359	2-1/8	5	$96.90
W2363	2-5/8	5	$186.80
W2368	3-1/8	2	$299.80
W2393	3-5/8	1	$907.00
W2395	4-1/8	1	$979.00

Symbols used to describe fittings ends are as follows:

C Copper (cup) manufactured to receive copper tube diameter

FTG Fitting end made to copper tube diameter

COPPER FITTINGS

Coupling Reducing C x C

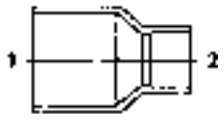

Part #	Size	Pcs / Box	LIST
W1004	1/4 x 3/16	50	
W1005	1/4 x 1/8	50	
W1010	3/8 x 5/16	50	$9.60
W1011	3/8 x 1/4	50	$9.10
W1019	1/2 x 3/8	50	$3.30
W1021	1/2 x 1/4	50	$4.40
W1023	5/8 x 1/2	50	$3.20
W1025	5/8 x 3/8	50	$3.90
W1027	5/8 x 1/4	100	$4.20
W1029	3/4 x 5/8	100	$7.80
W1030	3/4 x 1/2	100	$9.70
W1031	3/4 x 3/8	100	$8.00
W1035	7/8 x 3/4	100	$5.50
W1036	7/8 x 5/8	50	$5.20
W1037	7/8 x 1/2	50	$6.90
W1038	7/8 x 3/8	50	$6.80
W1049	1-1/8 x 7/8	25	$10.10
W1050	1-1/8 x 3/4	25	$10.80
W1051	1-1/8 x 5/8	25	$12.00
W1052	1-1/8 x 1/2	25	$11.60
W1056	1-3/8 x 1-1/8	10	$14.20
W1058	1-3/8 x 7/8	10	$14.20
W1060	1-3/8 x 5/8	10	$13.60
W1064	1-5/8 x 1-3/8	10	$23.50
W1065	1-5/8 x 1-1/8	10	$23.50
W1069	1-5/8 x 5/8	10	$23.50
W1073	2-1/8 x 1-5/8	100	$36.40
W1074	2-1/8 x 1-3/8	100	$36.40
W1075	2-1/8 x 1-1/8	100	$38.40
W1077	2-1/8 x 7/8	100	$75.60
W1079	2-1/8 x 5/8	75	$45.50
W1083	2-5/8 x 2-1/8	50	$80.50
W1084	2-5/8 x 1-5/8	50	$82.20
W1085	2-5/8 x 1-3/8	50	$92.90
W1086	2-5/8 x 1-1/8	50	$93.50
W1093	3-1/8 x 2-5/8	25	$105.90
W1094	3-1/8 x 2-1/8	25	$103.80
W1095	3-1/8 x 1-5/8	25	$342.00
W10101	3-5/8 x 3-1/8	25	$299.20
W10108	4-1/8 x 3-5/8	20	$417.00
W10109	4-1/8 x 3-1/8	20	$358.00
W10110	4-1/8 x 2-5/8	15	$406.00
W10111	4-1/8 x 2-1/8	20	$383.00

Symbols used to describe fittings ends are as follows:
C Copper (cup) manufactured to receive copper tube diameter
FTG Fitting end made to copper tube diameter

Bushing Reducing FTG x C

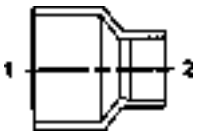

Part #	Size	Pcs / Box	LIST
W1302	1/4 x 1/8	50	$9.00
W1306	3/8 x 1/4	50	$4.30
W1312	1/2 x 3/8	50	$4.50
W1314	1/2 x 1/4	50	$5.50
W1315	5/8 x 1/2	50	$3.60
W1317	5/8 x 3/8	50	$4.00
W1320	3/4 x 5/8	100	$8.70
W1321	3/4 x 1/2	100	$8.80
W1322	3/4 x 3/8	100	$17.80
W1325	7/8 x 3/4	100	$5.50
W1326	7/8 x 5/8	50	$5.20
W1327	7/8 x 1/2	50	$7.20
W1328	7/8 x 3/8	50	$10.20
W1337	1-1/8 x 7/8	25	$8.40
W1338	1-1/8 x 3/4	25	$10.20
W1339	1-1/8 x 5/8	25	$11.00
W1340	1-1/8 x 1/2	20	$10.40
W1343	1-3/8 x 1-1/8	10	$15.50
W1345	1-3/8 x 7/8	10	$15.50
W1347	1-3/8 x 5/8	10	$15.50
W1350	1-5/8 x 1-3/8	10	$20.20
W1351	1-5/8 x 1-1/8	10	$20.20
W1353	1-5/8 x 7/8	10	$20.20
W1355	1-5/8 x 5/8	10	$20.20
W1358	2-1/8 x 1-5/8	100	$38.10
W1359	2-1/8 x 1-3/8	100	$38.10
W1360	2-1/8 x 1-1/8	100	$40.10
W1362	2-1/8 x 7/8	100	$37.30
W1364	2-1/8 x 5/8	100	$40.00
W1367	2-5/8 x 2-1/8	50	$75.80
W1368	2-5/8 x 1-5/8	50	$77.40
W1369	2-5/8 x 1-3/8	50	$72.50
W1370	2-5/8 x 1-1/8	50	$80.90
W1376	3-1/8 x 2-5/8	25	$97.30
W1377	3-1/8 x 2-1/8	25	$95.10
W1378	3-1/8 x 1-5/8	50	$179.60
W1379	3-1/8 x 1-3/8	50	$89.90
W1381	3-5/8 x 3-1/8	20	$138.50
W1382	3-5/8 x 2-5/8	20	$230.50
W1383	3-5/8 x 2-1/8	20	$138.50
W1386	4-1/8 x 3-5/8	20	$322.00
W1387	4-1/8 x 3-1/8	15	$204.70
W1388	4-1/8 x 2-5/8	15	$212.80
W1389	4-1/8 x 2-1/8	15	$362.00

COPPER FITTINGS

Cap (WC-415) C



Part #	Size	Pcs / Box	LIST
W7002	1/4	50	$2.90
W7004	3/8	50	$1.90
W7006	1/2	50	$3.00
W7007	5/8	100	$1.40
W7008	3/4	50	$3.60
W7009	7/8	50	$2.50
W7011	1-1/8	50	$5.80
W7012	1-3/8	25	$8.70
W7013	1-5/8	25	$12.70
W7014	2-1/8	100	$23.50
W7015	2-5/8	50	$75.10
W7016	3-1/8	50	$102.90
W7017	3-5/8	25	$644.00
W7018	4-1/8	20	$194.10

45° ELL
C x C



Part #	Size	Pcs / Box	LIST
W3005	1/4	50	$15.20
W3012	3/8	50	$10.90
W3021	1/2	50	$9.70
W3026	5/8	50	$3.50
W3030	3/4	50	$16.80
W3034	7/8	25	$6.20
W3044	1-1/8	25	$15.50
W3050	1-3/8	10	$22.10
W3055	1-5/8	10	$26.60
W3059	2-1/8	10	$44.50
W3063	2-5/8	5	$94.80
W3067	3-1/8	2	$140.60
W3070	3-5/8	2	$466.00
W3073	4-1/8	1	$480.00

45° ELL Street FTG x C



Part #	Size	Pcs / Box	LIST
W3312	3/8	100	$16.90
W3321	1/2	100	$13.30
W3326	5/8	50	$4.00
W3330	3/4	50	$25.50
W3334	7/8	25	$6.20
W3344	1-1/8	25	$21.60
W3350	1-3/8	10	$27.20
W3355	1-5/8	10	$33.30
W3359	2-1/8	5	$52.90
W3363	2-5/8	2	$226.70
W3368	3-1/8	2	$337.00
W3373	4-1/8	1	$692.00

Coupling (Union C-107)
C x C



Part #	Size	Pcs / Box	LIST
W8001	3/8	25	$35.10
W8002	1/2	25	$47.40
W8003	5/8	25	$25.10
W8004	7/8	10	$30.00
W8005	1-1/8	10	$58.40

Return Bend
C x C



Part #	Size	Pcs / Box	LIST
W6025	3/8 x 4-1/2	25	-
W6020	3/8 x 1-1/2	25	$17.40
W6048	1/2 x 6	100	-
W6045	1/2 x 4	200	-
W6041	1/2 x 3	25	$22.30
W6036	1/2 x 2	50	$23.40
W6032	1/2 x 1-1/2	50	$10.50
W6062	5/8 x 3-3/8	10	$79.70
W6060	5/8 x 3	25	$36.60
W6058	5/8 x 2-1/2	25	$17.10
W6056	5/8 x 2-1/4	25	$32.60
W6053	5/8 x 1-7/8	25	$40.00
W6051	5/8 x 1-9/16	25	$38.70
W6084	3/4 x 4	120	-
W6081	3/4 x 3-3/8	10	-
W6077	3/4 x 2-1/2	10	$84.20
W6074	3/4 x 2-1/8	10	$40.10
W6073	3/4 x 2	10	$92.20
W6095	7/8 x 3-3/8	10	$42.20
W6092	7/8 x 2-1/2	10	$30.20
W60111	1-1/8 x 3-1/4	5	$44.00
W60110	1-1/8 x 3	5	$65.70
W60121	1-3/8 x 3-3/4	5	$108.00
W60131	1-5/8 x 4-1/2	25	$135.60
W60140	2-1/8 x 5-1/2	5	$354.00

90° ELL
Reducing Short Radius
C x C



Part #	Size	Pcs / Box	LIST
W2011	3/8 x 1/4	50	$16.70
W2019	1/2 x 3/8	50	$22.30
W2023	5/8 x 1/2	50	$15.60
W2025	5/8 x 3/8	50	$29.30
W2029	3/4 x 5/8	50	$37.70
W2030	3/4 x 1/2	50	-
W2035	7/8 x 3/4	50	$26.40
W2036	7/8 x 5/8	50	$23.80
W2037	7/8 x 1/2	50	$30.60
W2049	1-1/8 x 7/8	25	$406.00
W2050	1-1/8 x 3/4	25	-
W2051	1-1/8 x 5/8	25	-
W2052	1-1/8 x 1/2	25	-
W2056	1-3/8 x 1-1/8	20	$108.50
W2077	1-5/8 x 1-3/8	10	$51.70
W2078	2-1/8 x 1-5/8	5	$164.60

Symbols used to describe fittings ends are as follows:

C Copper (cup) manufactured to receive copper tube diameter

FTG Fitting end made to copper tube diameter

COPPER FITTINGS

Male Adapters C x MPT

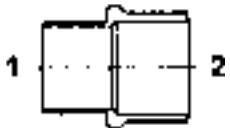

Part #	Size	Pcs / Box	LIST
W1105	1/4 x 3/8	50	$23.50
W1106	1/4 x 1/4	50	$42.30
W1107	1/4 x 1/8	100	$45.20
W1110	5/16 x 1/4	50	-
W1113	3/8 x 1/2	50	$11.60
W1114	3/8 x 3/8	50	$44.80
W1115	3/8 x 1/4	50	$8.80
W1116	3/8 x 1/8	50	$30.60
W1123	1/2 x 3/4	25	$35.60
W1124	1/2 x 1/2	50	$14.20
W1125	1/2 x 3/8	50	$10.50
W1126	1/2 x 1/4	50	$47.00
W1129	5/8 x 1	25	$73.80
W1130	5/8 x 3/4	25	$12.40
W1131	5/8 x 1/2	50	$4.20
W1132	5/8 x 3/8	50	$10.80
W1133	5/8 x 1/4	25	$26.60
W1138	3/4 x 3/4	25	$15.90
W1139	3/4 x 1/2	25	$22.20
W1145	7/8 x 1	25	$25.20
W1146	7/8 x 3/4	50	$7.10
W1147	7/8 x 1/2	25	$12.40
W1161	1-1/8 x 1-1/2	10	$148.80
W1162	1-1/8 x 1-1/4	10	$79.80
W1163	1-1/8 x 1	25	$17.50
W1164	1-1/8 x 3/4	10	$27.20
W1165	1-1/8 x 1/2	10	$68.60
W1170	1-3/8 x 1-1/2	10	$126.20
W1171	1-3/8 x 1-1/4	20	$27.20
W1172	1-3/8 x 1	10	$40.60
W1173	1-3/8 x 3/4	10	$93.70
W1178	1-5/8 x 2	50	$236.10
W1179	1-5/8 x 1-1/2	10	$31.20
W1180	1-5/8 x 1-1/4	10	$126.40
W1181	1-5/8 x 1	10	$150.00
W1187	2-1/8 x 2	50	$52.90
W1188	2-1/8 x 1-1/2	50	$122.30
W1189	2-1/8 x 1-1/4	50	$204.70
W1196	2-5/8 x 2-1/2	20	$127.20
W1197	2-5/8 x 2	20	$124.20
W1198	2-5/8 x 1-1/2	20	$325.00
W1199	3-1/8 x 3	20	$286.50
W1150	4-1/8 x 4	2	$597.00

Adapter FTG x MPT

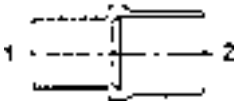

Part #	Size	Pcs / Box	LIST
W1414-CFT	3/8 x 3/8	50	
W1425-CFT	1/2 x 3/8	50	
W1431-CFT	5/8 x 1/2	50	$37.80
W1432	5/8 x 3/8	50	
W1446-CFT	7/8 x 3/4	50	$48.30
W1447	7/8 x 1/2	50	
W1463-CFT	1-1/8 x 1	25	$62.20
W1464-CFT	1-1/8 x 3/4	25	$105.00
W1471	1-3/8 x 1-1/4	10	
W1479-CFT	1-5/8 x 1-1/2	10	
W1487-CFT	2-1/8 x 2	50	$374.00
W1496	2-5/8 x 2-1/2	20	

Female Adapters C x FPT

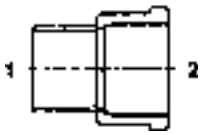

Part #	Size	Pcs / Box	LIST
W1204	1/4 x 1/2	100	$26.80
W1205	1/4 x 3/8	100	$11.70
W1206	1/4 x 1/4	100	$4.60
W1207	1/4 x 1/8	100	$14.30
W1214	3/8 x 3/8	50	$26.60
W1215	3/8 x 1/4	50	$12.30
W1216	3/8 x 1/8	100	$33.90
W1223	1/2 x 3/4	50	$30.40
W1224	1/2 x 1/2	50	$13.70
W1225	1/2 x 3/8	50	$14.10
W1226	1/2 x 1/4	50	$12.50
W1230	5/8 x 3/4	50	$13.60
W1231	5/8 x 1/2	50	$6.40
W1232	5/8 x 3/8	50	$21.30
W1233	5/8 x 1/4	50	$21.30
W1238	3/4 x 3/4	50	$15.90
W1239	3/4 x 1/2	50	$137.90
W1245	7/8 x 1	25	$29.00
W1246	7/8 x 3/4	25	$8.70
W1247	7/8 x 1/2	50	$14.60
W1263	1-1/8 x 1	25	$21.30
W1264	1-1/8 x 3/4	25	$30.90
W1265	1-1/8 x 1/2	25	$78.50
W1270	1-3/8 x 1-1/2	10	$348.00
W1271	1-3/8 x 1-1/4	10	$28.70
W1272	1-3/8 x 1	10	$131.60
W1278	1-5/8 x 2	60	$247.60
W1279	1-5/8 x 1-1/2	10	$48.90
W1280	1-5/8 x 1-1/4	10	$144.80
W1287	2-1/8 x 2	50	$60.80
W1296	2-5/8 x 2-1/2	25	$442.00
W1297	3-1/8 x 3	15	$623.00

COPPER FITTINGS

Tee C x C x C

Part #	Size	Pcs / Box	LIST
W40300	1/8	50	-
W40302	3/16	50	$16.90
W40306	1/4	100	$11.50
W40313	5/16	50	$6.70
W4000	3/8	50	$12.20
W4001	1/2	50	$10.30
W4006	5/8	50	$3.70
W4017	3/4	25	$22.30
W4031	7/8	25	$8.30
W4048	1-1/8	10	$24.50
W4068	1-3/8	5	$35.20
W4084	1-5/8	5	$54.40
W40102	2-1/8	5	$84.70
W40123	2-5/8	2	$171.00
W40152	3-1/8	2	$260.90
W40190	3-5/8	1	$756.00
W40200	4-1/8	1	$1,025.00
W40400	5-1/8	1	$3,192.00
W40500	6-1/8	1	-

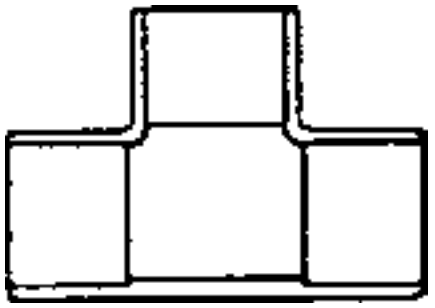

P-Trap (Suction Line) C x C

Part #	Size	Pcs / Box	LIST
W60999	5/8	10	$61.10
W61008	3/4	10	$91.10
W61000	7/8	5	$68.00
W61001	1-1/8	3	$103.20
W61002	1-3/8	4	$187.70
W61003	1-5/8	4	$284.60
W61009	2-1/8	3	$584.00

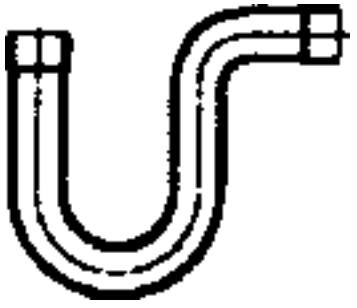

Symbols used to describe fittings ends are as follows:

C Copper (cup) manufactured to receive copper tube diameter

FTG Fitting end made to copper tube diameter

REFRIGERATION FLARE FITTINGS

Nut (Short Forged-Internal Flare to Tube)(40 Series)



Part #	Size	Pcs / Box	LIST
NS4-3	3/16	50	$8.20
NS4-4	1/4	50	$1.80
NS4-5	5/16	25	$3.30
NS4-6	3/8	25	$2.80
NS4-8	1/2	15	$3.80
NS4-10	5/8	10	$5.60
NS4-12	3/4	10	$14.00
NS4-14	7/8	10	$39.10

Nut (Short Forged Reducing - Internal Flare to Tube)(40R Series)



Part #	Size	Pcs / Box	LIST
NRS4-43	1/4 x 3/16	10	$15.60
NRS4-54	5/16 x 1/4	10	$17.90
NRS4-64	3/8 x 1/4	25	$6.70
NRS4-65	3/8 x 5/16	10	$7.20
NRS4-86	1/2 x 3/8	15	$4.90
NRS4-108	5/8 x 1/2	15	$10.20

Nut (Long Forged-Internal Flare to Tube)(39 Series)

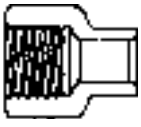

Part #	Size	Pcs / Box	LIST
N4-4	1/4	25	$4.00
N4-5	5/16	25	$15.80
N4-6	3/8	25	$3.70
N4-8	1/2	10	$6.50
N4-10	5/8	5	$11.50
N4-12	3/4	5	$18.20

Extension (Internal Flare to Ext Solder)

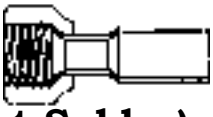

Part #	Size	Pcs / Pk	LIST (per pk)
A15725	1/4 x 1/4	1	$10.10
A15726	3/8 x 3/8	1	$15.80
A15727	1/2 x 1/2	1	$23.20
A15728	5/8 x 5/8	1	$22.10
A15729	3/4 x 3/4	1	$36.90

Connector (Half Union - Flare to MPT) (48 Series)



Part #	Size	Pcs / Box	LIST
U1-3A	3/16 x 1/8	25	$2.00
U1-4A	1/4 x 1/8	25	$1.80
U1-4B	1/4 x 1/4	25	$2.50
U1-4C	1/4 x 3/8	25	$3.40
U1-4D	1/4 x 1/2	25	$6.40
U1-5A	5/16 x 1/8	25	$2.30
U1-5B	5/16 x 1/4	25	$2.90
U1-5C	5/16 x 3/8	25	$6.30
U1-6A	3/8 x 1/8	25	$2.90
U1-6B	3/8 x 1/4	25	$3.10
U1-6C	3/8 x 3/8	25	$3.70
U1-6D	3/8 x 1/2	25	$5.60
U1-8A	1/2 x 1/8	10	-
U1-8B	1/2 x 1/4	10	$4.50
U1-8C	1/2 x 3/8	10	$5.20
U1-8D	1/2 x 1/2	10	$4.90
U1-8E	1/2 x 3/4	10	$9.60
U1-10B	5/8 x 1/4	10	-
U1-10C	5/8 x 3/8	10	$7.20
U1-10D	5/8 x 1/2	10	$7.60
U1-10E	5/8 x 3/4	5	$9.10
U1-12C	3/4 x 3/8	5	-
U1-12D	3/4 x 1/2	5	$12.40
U1-12E	3/4 x 3/4	5	$12.40

Union (Flare to Flare) (42 Series)

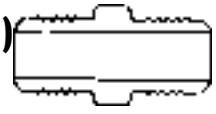

Part #	Size	Pcs / Box	LIST
U2-3	3/16	25	$5.60
U2-4	1/4	25	$2.00
U2-5	5/16	25	$3.80
U2-6	3/8	25	$4.30
U2-8	1/2	15	$4.80
U2-10	5/8	10	$8.40
U2-12	3/4	10	$17.60

Reducing Union (Flare to Flare) (42R Series)

Part #	Size	Pcs / Box	LIST
UR2-43	1/4 x 3/16	15	-
UR2-54	5/16 x 1/4	10	-
UR2-64	3/8 x 1/4	15	-
UR2-65	3/8 x 5/16	10	-
UR2-84	1/2 x 1/4	15	-
UR2-86	1/2 x 3/8	25	-
UR2-106	5/8 x 3/8	10	$10.10
UR2-108	5/8 x 1/2	15	-
UR2-128	3/4 x 1/2	10	-
UR2-1210	3/4 x 5/8	10	-

REFRIGERATION FLARE FITTINGS

Connector (Half Union - Flare to Solder)

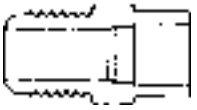

SKU	Part #	Size	LIST
A03431-CFT	US3-44	1/4 x 1/4	$4.60
A03466-CFT	US3-45	1/4 x 5/16	$9.80
A03494-CFT	US3-46	1/4 x 3/8	$14.30
A03443-CFT	US3-64	3/8 x 1/4	$10.30
A03464-CFT	US3-65	3/8 x 5/16	$15.90
A03492-CFT	US3-66	3/8 x 3/8	$8.90
A03547-CFT	US3-68	3/8 x 1/2	$18.20
A06601-CFT	US3-610	3/8 x 5/8	$21.40
A03504-CFT	US3-86	1/2 x 3/8	$21.40
A03546-CFT	US3-88	1/2 x 1/2	$18.20
A02259-CFT	US3-810	1/2 x 5/8	$22.40
A03519-CFT	US3-108	5/8 x 1/2	$22.40
A02258-CBS	US3-1010	5/8 x 5/8	$24.20
A02272-CFT	US3-1012	5/8 x 3/4	$25.30
A02378-CFT	US3-1014	5/8 x 7/8	$28.00
A05307-CFT	US3-1212	3/4 x 3/4	$22.40
A05425-CFT	US3-1214	3/4 x 7/8	$30.10

Union (Internal Flare to Flare) (35 Series)



SKU	Part #	Size	Pcs / Box	LIST
A05147-CFT	UR3-43	1/4 x 3/16	10	$12.10
A05041-CFT	UR3-46	1/4 x 3/8	15	$12.10
A08127-CFT	UR3-48	1/4 x 1/2	10	$19.00
A00479-CFT	UR3-64	3/8 x 1/4	15	$10.10
A4888	UR3-68	3/8 x 1/2	15	
A00480-CFT	UR3-84	1/2 x 1/4	15	$17.90
A00481-CFT	UR3-86	1/2 x 3/8	15	$17.60
A04879-CFT	UR3-810	1/2 x 5/8	10	$17.60
A04770-CFT	UR3-108	5/8 x 1/2	10	$29.90
A04878-CFT	UR3-1012	5/8 x 3/4	10	$30.40
A04826-CFT	UR3-1210	3/4 x 5/8	10	$36.90

Swivel Union (Internal Flare)(34 Series)



Part #	Size	Pcs / Box	LIST
US4-4	1/4	15	$10.20
US4-5	5/16	15	$15.00
US4-6	3/8	15	$10.80
US4-8	1/2	15	$13.70
US4-10	5/8	15	$13.70

Connector (Half Union - Flare to FPT) (46 Series)

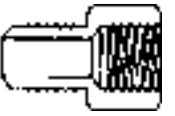

Part #	Size	Pcs / Box	LIST
U3-4A	1/4 x 1/8	25	$2.30
U3-4B	1/4 x 1/4	25	$2.90
U3-4C	1/4 x 3/8	15	$8.20
U3-6A	3/8 x 1/8	10	$3.10
U3-6B	3/8 x 1/4	25	$3.80
U3-6C	3/8 x 3/8	15	$4.70
U3-6D	3/8 x 1/2	15	$7.20
U3-8B	1/2 x 1/4	15	-
U3-8C	1/2 x 3/8	15	$5.40
U3-8D	1/2 x 1/2	15	$8.80
U3-10C	5/8 x 3/8	10	$12.10
U3-10D	5/8 x 1/2	10	$9.30
U3-10E	5/8 x 3/4	10	$12.00

Union (Internal Flare) (32 Series)



Part #	Size	Pcs / Box	LIST
U4-4-FAI	1/4	10	$10.00
U4-6	3/8	10	-
U4-8	1/2	10	-

90° Elbow (Half Union - Flare to MPT)(49 Series)



Part #	Size	Pcs / Box	LIST
E1-4A	1/4 x 1/8	25	$3.80
E1-4B	1/4 x 1/4	25	$4.30
E1-4C	1/4 x 3/8	25	$4.90
E1-6A	3/8 x 1/8	25	$4.70
E1-6B	3/8 x 1/4	25	$5.00
E1-6C	3/8 x 3/8	25	$4.70
E1-6D	3/8 x 1/2	25	$7.20
E1-8B	1/2 x 1/4	10	$6.50
E1-8C	1/2 x 3/8	15	$6.30
E1-8D	1/2 x 1/2	15	$8.20
E1-8E	1/2 x 3/4	10	$13.70
E1-10C	5/8 x 3/8	10	$10.80
E1-10D	5/8 x 1/2	10	$11.70
E1-10E	5/8 x 3/4	10	$15.20
E1-12D	3/4 x 1/2	10	$19.40
E1-12E	3/4 x 3/4	10	$19.70

REFRIGERATION FLARE FITTINGS

90° Elbow (Union - Flare to Flare)(55 Series)

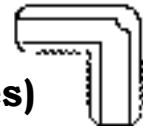

Part #	Size	Pcs / Box	LIST
E2-4	1/4	25	$4.50
E2-6	3/8	25	$5.80
E2-8	1/2	15	-
E2-10	5/8	10	$11.90
E2-12	3/4	5	$40.40

Reducing Elbow (Flare to Flare) (55R Series)

Part #	Size	Pcs / Box	LIST
ER2-64	3/8 x 1/4	25	$9.80
ER2-84	1/2 x 1/4	25	$17.70
ER2-86	1/2 x 3/8	15	$8.60

90° Elbow (Flare to Internal Flare)



Part #	Size	Pcs / Box	LIST
A04898-CFT	1/4	25	$17.30
A08082-CFT	3/8	25	-

Tee (Two Way - Flare to Flare to MPT) (45 Series)



Part #	Size	Pcs / Box	LIST
T1-4A	1/4 x 1/4 x 1/8	25	$6.20
T1-4B	1/4 x 1/4 x 1/4	25	-
T1-4C	1/4 x 1/4 x 3/8	15	$16.70
T1-6B	3/8 x 3/8 x 1/4	25	$8.60
T1-6C	3/8 x 3/8 x 3/8	15	$11.50
T1-8B	1/2 x 1/2 x 1/4	15	$22.20
T1-8C	1/2 x 1/2 x 3/8	15	$18.40
T1-8D	1/2 x 1/2 x 1/2	10	$21.20
T1-10C	5/8 x 5/8 x 3/8	10	$20.90
T1-10D	5/8 x 5/8 x 1/2	10	$35.40

Tee (1/4 Tube OD x 1/4 Female Pipe)



Part #	Size	Pcs / Box	LIST
T6-4	1/4	25	$14.00

90° Solder Elbow (Half Union - Flare to Solder)

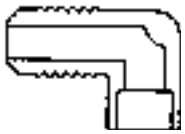

Part #	Size	LIST
A03449-CFT	1/4 x 1/4	$14.20
A03511-CFT	3/8 x 3/8	$23.20
A07851-CFT	1/2 x 1/2	$21.00

90° Elbow (Flare to FPT)(50 Series)



Part #	Size	Pcs / Box	LIST
E3-4A	1/4 x 1/8	25	$5.50
E3-4B	1/4 x 1/4	25	$8.50
E3-6B	3/8 x 1/4	25	$5.70
E3-6C	3/8 x 3/8	25	$6.60
E3-8D	1/2 x 1/2	15	$9.20

90° Swivel Elbow (Flare to Internal Flare)



Part #	Size	Pcs / Box	LIST
ES4-44	1/4	4	$32.60
ES4-66	3/8	4	$38.20
ES4-88	1/2	4	

Tee (Flare to MPT to Flare)(51 Series)

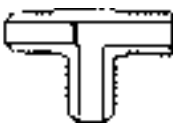

Part #	Size	Pcs / Box	LIST
T3-4A	1/4 x 1/8 x 1/4	25	$7.90
T3-4B	1/4 x 1/4 x 1/4	25	$9.70
T3-6B	3/8 x 1/4 x 3/8	25	$10.90
T3-6C	3/8 x 3/8 x 3/8	25	$9.00

REFRIGERATION FLARE FITTINGS

Tee (Three Way - Flare) (44 Series)

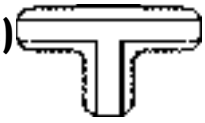

Part #	Size	Pcs / Box	LIST
T2-4	1/4	25	$5.40
T2-5	5/16	25	$11.40
T2-6	3/8	15	$6.40
T2-8	1/2	15	$10.30
T2-10	5/8	10	$13.60
T2-12	3/4	5	$58.20

Reducing Tee (Flare) (44R Series)

Part #	Size	Pcs / Box	LIST
TR2-46	1/4 x 1/4 x 3/8	25	$34.80
TR2-64	3/8 x 3/8 x 1/4	25	$6.20
TR2-68	3/8 x 3/8 x 1/2	15	$15.50
TR2-84	1/2 x 1/2 x 1/4	10	$63.00
TR2-86	1/2 x 1/2 x 3/8	15	$7.60
TR2-810	1/2 x 1/2 x 5/8	10	$13.30

Gasket (Copper Flare - Flare) (59 Series)



Part #	Size	Pcs / Box	LIST
B2-3	3/16	50	-
B2-4	1/4	100	-
B2-5	5/16	50	-
B2-6	3/8	100	-
B2-8	1/2	100	-
B2-10	5/8	50	-
B2-12	3/4	25	-

Cap (Flare Seal - Internal Flare-Hex)(56 Series)



Part #	Size	Pcs / Box	LIST
N5-4	1/4	50	$1.20
N5-5	5/16	25	$4.10
N5-6	3/8	25	$2.60
N5-8	1/2	25	$2.90
N5-10	5/8	10	$5.80
N5-12	3/4	10	$16.70

Fusible Pipe Plug (MPT) 283°F / 210°F / 168°F



Part #	Size	Pcs / Box	LIST
FP-A	1/8	10	$32.80
FP-B	1/4	15	$42.20
FP-C	3/8	15	$51.50

Seal Bonnet (Copper Flare - Flare)(57 Series)



SKU	Part #	Size	Pcs / Box	LIST
A04737-CFT	B1-3	3/16	50	$7.50
A00414-CFT	B1-4	1/4	100	$2.80
A04935-CFT	B1-5	5/16	50	$13.20
A00415-CFT	B1-6	3/8	100	$3.50
A00416-CFT	B1-8	1/2	100	$6.20
A00485-CFT	B1-10	5/8	20	$4.60
A04738-CFT	B1-12	3/4	25	$14.40

Plug (Brass - Flare) (58 Series)



Part #	Size	Pcs / Box	LIST
P2-3	3/16	15	-
P2-4	1/4	25	$2.00
P2-5	5/16	15	$7.80
P2-6	3/8	25	$3.00
P2-8	1/2	25	$4.00
P2-10	5/8	15	$8.60
P2-12	3/4	10	$10.10

Fusible Connector (Half Union - Flare to MPT) 283°F / 210°F / 168°F

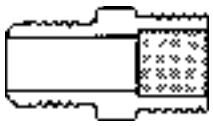

Part #	Size	Pcs / Box	LIST
FU-4B	1/4 x 1/4	10	$47.60
FU-4C	1/4 x 3/8	10	-
FU-6C	3/8 x 3/8	10	$58.00

Drum Adapter (Refrigerant-Flare-Internal Pipe (NPSM)) (w/gasket)

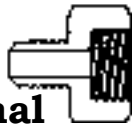

Part #	Size	Pcs / Box	LIST
A08073-CFT	1/4 x 3/4	10	$25.80
A08274-CFT	3/8 x 3/4	10	$26.60
A08276-CFT	1/2 x 3/4	10	$82.70
A08166-CFT	1/4 x 1/2	10	$102.20

BRASS COMPRESSION FITTINGS

Standard Sleeve



Part #	Tube	LIST
60-3	3/16	$0.20
60-4	1/4	$0.20
60-5	5/16	$0.20
60-6	3/8	$0.30
60-8	1/2	$0.50
60-10	5/8	$0.70
60-12	3/4	$1.20

Union Coupling



Part #	Tube	LIST
62-2	1/8	$2.70
62-3	3/16	$2.70
62-4	1/4	$2.90
62-5	5/16	$3.10
62-6	3/8	$4.10
62-8	1/2	$7.00
62-10	5/8	$9.50
62-12	3/4	$20.90
62-14	7/8	$23.90

Connector (Tube to Male Pipe)



Part #	Tube	Pipe	LIST
68-2A	1/8	1/8	$7.90
68-4A	1/4	1/8	$7.30
68-4B	1/4	1/4	$14.00
68-4C	1/4	3/8	$11.90
68-4D	1/4	1/2	$13.80
68-5A	5/16	1/8	$14.50
68-5B	5/16	1/4	$2.00
68-6A	3/8	1/8	$2.20
68-6B	3/8	1/4	$2.70
68-6C	3/8	3/8	$3.30
68-6D	3/8	1/2	$6.30
68-6E	3/8	3/4	$3.20
68-8B	1/2	1/4	$3.40
68-8C	1/2	3/8	$3.80
68-8D	1/2	1/2	$2.70
68-8E	1/2	3/4	$3.60
68-10C	5/8	3/8	$4.90
68-10D	5/8	1/2	$16.70
68-10E	5/8	3/4	$5.00
68-12D	3/4	1/2	$4.90
68-12E	3/4	3/4	$6.80
68-14E	7/8	3/4	$11.90

Connector (Tube to Female Pipe)



Part #	Tube	Pipe	LIST
66-4B	1/4	1/4	$2.80
66-6B	3/8	1/4	$3.70

Standard Nut



Part #	Tube	LIST
61-4	1/4	$0.80
61-5	5/16	$0.90
61-6	3/8	$0.90
61-8	1/2	$2.10
61-10	5/8	$2.70
61-12	3/4	$4.30

90° Elbow (Tube to Tube)



Part #	Tube	LIST
65-3	3/16	$13.40
65-4	1/4	$5.20
65-5	5/16	$8.80
65-6	3/8	$7.70
65-8	1/2	$13.80

90° Elbow (Tube to Male Pipe)



Part #	Tube	Pipe	LIST
69-4A	1/4	1/8	$4.80
69-4B	1/4	1/4	$5.90
69-4C	1/4	3/8	$7.40
69-4D	1/4	1/2	$14.30
69-6A	3/8	1/8	$6.60
69-6B	3/8	1/4	$6.20
69-6C	3/8	3/8	$7.40
69-6D	3/8	1/2	$13.00
69-8B	1/2	1/4	$10.60
69-8C	1/2	3/8	$9.80
69-8D	1/2	1/2	$7.90

Tee (Tube Three Ends)

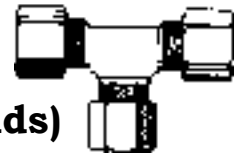

Part #	Tube	LIST
64-3	3/16	$8.30
64-4	1/4	$6.10
64-5	5/16	$11.20
64-6	3/8	$7.70
64-8	1/2	$14.50

BRASS PIPE FITTINGS

Close Nipple



Part #	Pipe	LIST
112-A	1/8	$1.10
112-B	1/4	$1.40
112-C	3/8	$2.20
112-D	1/2	$4.00
112-E	3/4	$6.10

Reducing Nipple



Part #	Pipe	LIST
122-BA	1/4 x 1/8	$2.60
122-CA	3/8 x 1/8	$3.40
122-CB	3/8 x 1/4	$3.90
122-DB	1/2 x 1/4	$7.30
122-DC	1/2 x 3/8	$6.00
122-ED	3/4 x 1/2	$11.20

Adapter



Part #	Pipe	LIST
120-AA	1/8 x 1/8	$1.60
120-BB	1/4 x 1/4	$3.10

Bushing



Part #	Pipe	LIST
110-BA	1/4 x 1/8	$1.30
110-CA	3/8 x 1/8	$2.60
110-CB	3/8 x 1/4	$1.70
110-DA	1/2 x 1/8	$5.30
110-DB	1/2 x 1/4	$3.80
110-DC	1/2 x 3/8	$3.50
110-EA	3/4 X 1/8	$16.90
110-EB	3/4 x 1/4	$8.50
110-EC	3/4 x 3/8	$5.70
110-ED	3/4 x 1/2	$6.10
110-HC	1 x 3/8	$13.40
110-HD	1 x 1/2	$13.80
110-HE	1 x 3/4	$9.90

Brass 90° Elbow



Part #	Pipe	LIST
100-A	1/8	$3.60
100-B	1/4	$5.00
100-C	3/8	$7.70
100-D	1/2	$11.90
100-E	3/4	$35.60

Hex Nipple



Part #	Pipe	LIST
122-A	1/8	$1.40
122-B	1/4	$2.00
122-C	3/8	$4.90
122-D	1/2	$6.70
122-E	3/4	$9.10

Coupling

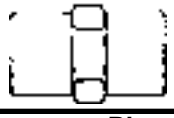

Part #	Pipe	LIST
103-A	1/8	$3.00
103-B	1/4	$4.10
103-C	3/8	$5.40
103-D	1/2	$8.40
103-E	3/4	$8.60

Reducing Adapter (female pipe listed first)



Part #	Pipe	LIST
120-BA	1/4 x 1/8	$2.70
120-CA	3/8 x 1/8	$4.30
120-CB	3/8 x 1/4	$4.50
120-DB	1/2 x 1/4	$8.90
120-DC	1/2 x 3/8	$8.60
120-ED	3/4 x 1/2	$13.30

Plug (Hex Head)



Part #	Cored	Pipe	LIST
121-A	YES	1/8	$0.90
121-B	YES	1/4	$1.70
121-C	YES	3/8	$2.80
121-D	YES	1/2	$4.60
121-E	YES	3/4	$7.50

90° Street Elbow



Part #	Pipe	LIST
116-A	1/8	$5.80
116-B	1/4	$5.00
116-C	3/8	$7.40
116-D	1/2	$12.90
116-E	3/4	$21.10

Tee

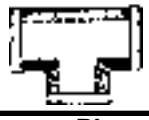

Part #	Pipe	LIST
101-A	1/8	$4.10
101-B	1/4	$6.30
101-C	3/8	$8.70
101-D	1/2	$14.90
101-E	3/4	$37.80

BRASS WATER HOSE FITTINGS

Connector (3/4" Male Hose)



Part #	Hose I.D.	LIST
193-8	1/2 - Barb	$6.50
193-10	5/8 - Barb	$8.00
196-D	1/2 - MPT	$6.00
196-E	3/4 - MPT	$7.10

Swivel Connector (3/4" Female Hose)

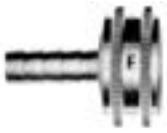

Part #	Hose I.D.	LIST
195-8	1/2 - Barb	$7.00
195-10	5/8 - Barb	$8.30
194-D	1/2 - MPT	$8.50

BRASS GAS APPLIANCE ORIFICES

Pilot Nut (Breakaway Type)

Part #	Tube Size	LIST	Part #	Tube Size	LIST
81-3N	3/16	$8.30	81-4N	1/4	$4.50

GEAR CLAMPS



Part #	Clamp Size (max)	LIST	Part #	Clamp Size (max)	LIST	Part #	Clamp Size (max)	LIST
HC6-4TB*	5/8	$1.00	HC6-10	1-1/16	$1.60	HC6-32	2-1/2	$1.90
HC6-6TB	7/8	$1.10	HC6-12	1-1/4	$1.60	HC6-40	3	$2.10
HC6-6	7/8	$1.60	HC6-16	1-1/2	$1.60	HC6-64	4-1/2	$2.70
HC6-8	1	-	HC6-24	2	$1.70			

* Denotes thin band. TB Series has a 5/16 inch wide band.

NYLON PIPE FITTINGS

Nylon Adapter



Part #	Description	LIST
525-8E	3/4" MPT x 1/2" BARB	$14.70
TAA-2420	3/4" MPT x 5/8" BARB	$7.90

Nylon Tee



Part #	Description	LIST
544-10	5/8" BARB x 5/8" BARB x 5/8" BARB	$8.40
TTB-161616	1/2" BARB x 1/2" MPT x 1/2" BARB	$3.60

Nylon Bushing

Part #	Description	LIST
TRA-2416	3/4" MPT x 1/2" FPT (100)	$6.20

Nylon Elbow



Part #	Description	LIST
TEA-2412	3/4" MPT x 3/8" BARB	$3.80
TEA-2416	3/4" MPT x 1/2" BARB	$17.00
TEA-2420	3/4" MPT x 5/8" BARB	$8.50
TEA-2424	3/4" MPT x 3/4" BARB	$18.30
TEB-2416	3/4" FPT x 1/2" BARB	$12.20
TEB-2420	3/4" FPT x 5/8" BARB	$5.60

Nylon Plug

Part #	Description	LIST
TPA-24	3/4" MPT (100)	$4.50

636 PIPE AND FITTINGS

IPEX

SYSTEM 636 PVC

System 636 PVC is classified as Type BH Class II A vent, suitable for use on appliances with flue gas temperatures up to and including 65ºC (149ºF).

System 636 PVC has specially certified Cements and Primers which are an integral part of the "system certification" of the product line. Substitutions shall not be made for any component of a System 636 PVC system, this includes pipe, fittings, cements and primers.





PVC Gas Vent Pipe (10ft length)

Part #	Dimension	LIST
194000	2"	$85.10
194001	3"	$198.50
194004	2-1/2"	$185.60

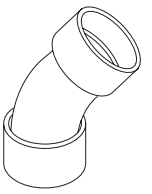

PVC - FGV 45º Long Elbow

Part #	Dimension	LIST
196010	2" long	$12.80
196011	3" long	$33.30

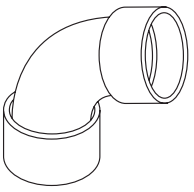

PVC FGV 90° Elbow

Part #	Dimension	LIST
196035	2"	$12.80
196025	3"	$34.70

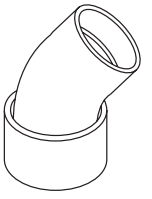

PVC - FGV 45º Elbow

Part #	Dimension	LIST
196071	2"	$13.50

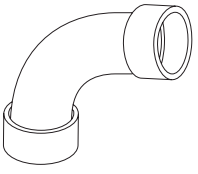

PVC - FGV 90º Extra Long Elbow

Part #	Dimension	LIST
196022	2" Extra long	$14.00
196023	3" Extra long	$36.60

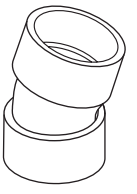

PVC - FGV 22-1/2º Elbow

Part #	Dimension	LIST
196252	2"	$19.10

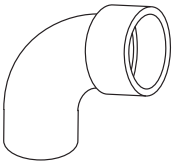

PVC - FGV 90º Street Elbow

Part #	Dimension	LIST
196232	2"	$11.20
196233	3"	$31.60

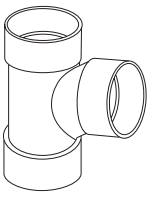

PVC - FGV Sanitary Tee

Part #	Dimension	LIST
196082	2"	$22.30
196083	3"	$39.80

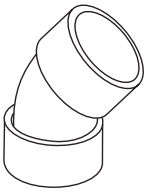

PVC - FGV 45º Elbow

Part #	Dimension	LIST
196242	2"	$11.00
196243	3"	$29.90

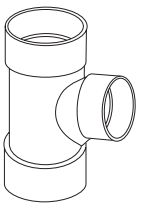

PVC - FGV Reducer Tee

Part #	Dimension	LIST
196056	2" x 1-1/2"	$18.20
196061	3" x 1-1/2"	$39.00

IPEX

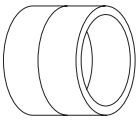

PVC - FGV Coupling

Part #	Dimension	LIST
196352	2"	$7.60
196353	3"	$17.00

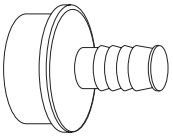

PVC - FGV Reducer Bushing Sp x Hose Barb

Part #	Dimension	LIST
196278	1-1/2" x 1-1/2"	$6.80

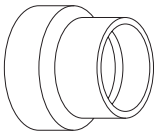

PVC - FGV Increaser Coupling

Part #	Dimension	LIST
196364	3" x 2"	$26.90



PVC - FGV Deep Socket Coupling

Part #	Dimension	LIST
196453	2"	$12.50

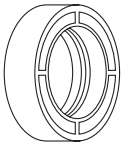

PVC - FGV Reducer Bushing

Part #	Dimension	LIST
196282	2" x 1-1/2"	$6.80
196284	3" x 2"	$13.20
196673	3" x 2-1/2"	$14.30

System 636 Accessories, Cements & Primers



FGV Concentric Vent Kit

Part #	Dimension	LIST
196005	2" x 16" PVC	$272.50
196125	2" x 40" PVC	$337.00
196006	3" x 20" PVC	$366.00



PVC Cement

Part #	Volume	LIST
196040	1 pint	$36.80

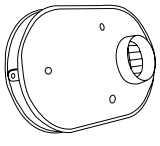

PVC - FGV Low Profile Termination Kit (Beige)

Part #	Dimension	LIST
1HT0902-636	2"	-
1HT0901-636	3"	-



Transition Cement

Part #	Volume	LIST
196044	1 pint	

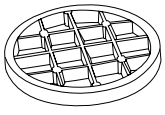

Termination Vent Screens

Part #	Dimension	LIST
196050	2"	$9.90
196051	3"	$24.80



PVC / CPVC Primer Low Voc

Part #	Volume	LIST
196042	1 pint (purple)	$41.90
196017	1 pint (clear)	$45.70

COPPER TUBING/ FITTINGS 199-247

PVC SCH 40 PIPE AND FITTINGS

Pipe

Part #	Description	LIST
PVC-3/4-10FT	3/4" 10FT 480 PSI PIPE	$11.20
PVC-1-10FT	1" 10FT 450 PSI PIPE	$14.00
PVC-1-1/4-20FT	1-1/4" 20FT 370 PSI PIPE	$44.80
PVC-1-1/2-10FT	1-1/2" 10FT 330 PSI PIPE	$81.20

Coupling - S X S

Part #	Description	LIST
035449	3/4"	$1.40
0360	1"	-
035451	1-1/4"	$2.70
035452	1-1/2"	$2.90

90 DEG Elbow - S X S

Part #	Description	LIST
0344	3/4"	-
0364	1"	$2.60
035522	1-1/4"	$4.30
035523	1-1/2"	$4.70

90 DEG Elbow - S X FPT

Part #	Description	LIST
0347	3/4"	-
0364-IPX	1"	$2.60
035509	1-1/4"	$5.30
035510	1-1/2"	$5.80

90 DEG Elbow Street

Part #	Description	LIST
0350	3/4"	-
0370	1"	-
035547	1-1/4"	$8.00
035548	1-1/2"	$8.90

90 DEG Elbow Street - MPT X S

Part #	Description	LIST
0351	3/4"	-
0371	1"	-
035503	1-1/4"	$7.10
035504	1-1/2"	$7.40

Cap

Part #	Description	LIST
035408	3/4"	$1.40
035409	1"	-
035410	1-1/4"	$2.90
035411	1-1/2"	$3.20

Condensate Traps

Part #	Description	LIST
0356	3/4" P-TRAP	$9.00
0357	3/4" R-TRAP	$10.60
13655	3/4" J-TRAP	$6.20
16082	1" P-TRAP	$11.60

45 DEG Elbow - S X S

Part #	Description	LIST
0346	3/4"	-
0366	1"	-
035484	1-1/4"	$5.20
035485	1-1/2"	$6.40

Female Adapter - S X FPT

Part #	Description	LIST
0341	3/4"	-
0361	1"	-
035562	1-1/4"	$3.20
035563	1-1/2"	$3.70

Male Adapter - S X MPT

Part #	Description	LIST
0342	3/4"	-
0362	1"	-
035605	1-1/4"	$2.70
035606	1-1/2"	$3.70

Tee

Part #	Description	LIST
0349	3/4"	-
0369	1"	-
035778	1-1/4"	$5.10
035779	1-1/2"	$6.10

Union - S X S

Part #	Description	LIST
17723-IPX	3/4"	$13.00
035902	1"	$13.20
035903	1-1/4"	$44.10
035904	1-1/2"	$45.70

Plug - MPT

Part #	Description	LIST
TPA-24	3/4"	$4.50
035624	1"	$5.60

Reducing Bushing

Part #	Description	LIST
0352	3/4" X 1/2"	-
035648	1" X 1/2"	$2.50
16268-IPX	1" X 3/4"	$2.50
035651	1-1/4" X 3/4"	$3.20
035652	1-1/4" X 1"	$3.20
035654	1-1/2" X 3/4"	$3.20
035655	1-1/2" X 1"	$3.20
035656	1-1/2" X 1-1/4"	$3.20

Reducing Coupling - S X S

Part #	Description	LIST
035759	3/4" X 1/2"	$2.20
035760	1" X 3/4"	$3.50
035761	1-1/4" X 1"	$5.60
035762	1-1/2" X 1-1/4"	$6.00
035764	2" X 1-1/2"	$9.40

Pipe Strap

Part #	Description	LIST
077811-IPX	1/2"	$2.70
077812-IPX	3/4"	$3.10
077813-IPX	1"	$3.90
077814-IPX	1-1/4"	$4.70
077815-IPX	1-1/2"	$5.20
077816-IPX	2"	$7.60

PIPE CLEANERS / PRIMERS / CEMENTS

Whitlam Primer Cleaner





Whitlam Clear Pipe Cement





Part #	Description	LIST
PPL8	Purple Primer Cleaner removes any glaze often found on plastic pipe/fittings. Softens plastic to accept the appropriate solvent cement. 1/2 pt Dauber Top Can	$16.80
PCL16	Clear Primer is a low VOC solvent cement primer for use on all PVC, ABS and CPVC pipe and fittings. 1 pt Dauber Top Can	$25.00

Part #	Description	LIST
PL8	Clear Medium Bodied Cement formulated for smaller and medium diameter solvent weld PVC pipe and fittings. 1/2 pt Dauber Top Can	$18.30
APR8	All Purpose Clear Heavy-Duty Cement for use through 6" diameter Sch. 40 & Sch. 80 ABS, PVC and Sch. 40 CPVC pipe. 1/2 pt Dauber Top Can	$17.20

PVC BRAIDED HOSE

Polyvinyl-Chloride braided hose is manufactured from F.D.A. approved resins.

It has an open mesh nylon braid to withstand higher pressures. It is transparent (blockages can be easily detected), flexible, light, and non conductive.

It is suitable for use with air, mineral salts, plating solution, water, salt water, and hydrocarbons.

PACKAGING: 100 ft. coils all sizes

TEMPERATURE: -5°F to +160°F, -21°C to +71°C



Part #	Outside Dia	Inside Dia.	W.P. P.S.I.	LIST
PVC-106	.600	3/8	225	$2.10
PVC-128	.750	1/2	200	$2.60
PVC-1410	.875	5/8	200	$3.70
PVC-1712	1.025	3/4	150	$4.40
PVC-2116	1.312	1	125	$6.90
PVC-2820	1.620	1-1/4	100	-

KURI-TEC HEAVY DUTY VINYL TUBING



Clear polyvinyl-chloride tubing is manufactured from F.D.A. approved resins.

It is clear, flexible, easy to clean, abrasion resistant and non-contaminating.

It is suitable for the conveyance of air, and water and is used extensively where foodstuffs and beverages are conveyed.

PACKAGING: 100 ft. coils

TEMPERATURE: +25°F to +149°F, -4°C to +65°C

Part #	Outside Dia	Inside Dia.	W.P. P.S.I.	LIST
VT-1/8	1/4	1/8	65	$0.60
VT-3/16	3/8	3/16	65	$1.40
VT-1/4	3/8	1/4	55	$0.90
VT-3/8	5/8	3/8	55	$2.60
VT-5/8	7/8	5/8	40	$3.60
VT-3/4	1	3/4	35	$4.40
VT-7/8	1-1/4	7/8	35	$9.50
VT-1	1-1/4	1	25	$5.10

ROOF PIER

Quick-Block

- Designed to evenly distribute weight
- Eliminate the worries of supporting equipment feeds on a flat roof
- Interlock for multiple feed installation
- No labour costs building wood blocks
- Tested at extreme weight & temperature
- Environmentally friendly
- Limited lifetime warranty
- 450 lbs max. capacity. 3/8" thick top for screw mounting w/interlocking edges.

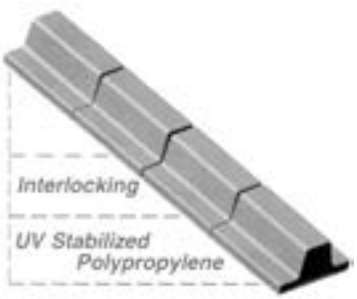

Part #	Dimensions	LIST
QUICK-BLOCK	12"L x 10"W x 5"H	$41.70

Special Note: Do not apply directly over PVC roofing membranes - Call for available alternate solutions

ROOF PIER

C-Port

C-Series





Specifications:
- Base with 14 ga. Galv. Channel (13/16” high)
- Dimensions - 4-7/8" High x 6" Wide x 9.6" to 48" Length (base length)
- Material - 100% recycled rubber, UV resistant
- Maximum Load - 750 lbs./ft.

***C-Port** C-Series channel support is designed for superior support of gas and refrigeration pipping systems, cable tray, electrical conduit, multiple lines, HVAC equipment and many other applications. The **C-Port** is UV resistant and suitable for installation on any type of roofing material or other flat surfaces. Can be used as a curb (sleeper) replacement.*

Part #	Height	Width	Length	Weight	LIST
C5	4-7/8" (124mm)	6" (152mm)	5" (127mm)	3.32 lbs.	$31.00
C10	4-7/8" (122mm)	6" (152mm)	9.6" (244mm)	5.30lbs	$41.10
C20	4-7/8" (122mm)	6" (152mm)	19" (482.60mm)	11.23lbs	$104.80

CX-Value Series

CXP



Specifications:
- Base Only Dimensions: 4” high x 6” wide x 9.6” long
- Material: 100% recycled rubber, UV resistant
- Maximum Load: 500 lbs.

***C-Port** CXP channel support is designed as an economical support of gas piping systems, electrical conduit, HVAC equipment and many other applications. The **C-Port** is UV resistant and appropriate for many types of roofing material or other flat surfaces. Material effectively accepts screw fasteners for securing one (1) or two (2) hole straps (not included).*

CXM MINI-PORT



Specifications:
- Base Only Dimensions: 4” high x 6” wide x 4.5” long (base length)
- Material: 100% recycled rubber, UV resistant
- Maximum Load: 150 lbs.

***C-Port** CXM Mini-Port is perfect for conduit and small piping.*

Part #	Height	Width	Length	Weight	LIST
CXP	4” (101mm)	6” (152mm)	9.6” (244mm)	4.56 lbs.	$30.10
CXM	4” (101mm)	6" (152mm)	4.5” (113mm)	2.60 lbs.	$22.50

CE-Extension Series

Specifications:
- Base with two (2) 1/2" Electro Zinc All Threaded Rod Risers and 1/4 ga. Galv. Channel (7/8” high)
- Dimensions - Overall height as specified
  Base - 4” Height x 6” Width x 9.6” Length (base length) or
  Base - 2-5/8” Height x 12” Width x 12” Length
- Material - 100% recycled rubber, UV resistant
- Load Coating - Range from 400 to 800 lbs.





***C-Port** CE-Series channel support is designed for as a superior extended support for gas and refrigeration pipping systems, cable tray, conduit and many other applications. The CE series is designed to be adjustable from 8" - 16". The **C-Port** is UV resistant and suitable for installation on any type of roofing material or other flat surfaces.*
A wide range of pipe clamps and straps can be used with this support.

Part #	Height	Width	Length	Riser High	Weight	LIST
CE10-12	4-7/8" (124mm)	6" (152mm)	5" (127mm)	12"	3.32 lbs.	$86.70
CE10-8	4-7/8" (124mm)	6" (152mm)	5" (127mm)	8"	3.32 lbs.	$78.50

VIBRATION PADS

The E.V.A. Pad - Extreme Vibration Attenuation



- Outperforms cork and rubber by a margin of greater than 3:1
- Outperforms our competitor's "waffle" pad by a margin of greater than 8:1 !
- Composite foam is much more structurally sound than cork.
- Not affected by oils or chemicals that can sometimes break down cork
- Designed to withstand 50 psi.

Part #	Description	LIST
MP-2E	2" x 2" x 7/8" EVA pad	$2.50
MP-4E	4" x 4" x 7/8" EVA pad	$6.60
MP-6E	6" x 6" x 7/8" EVA pad	$14.70
MP-18	18" x 18" x 3/8" Rubber pad	$63.90
MP-18E	18" x 18" x 7/8" EVA pad	$159.60

GAS APPLIANCE CONNECTORS (STATIONARY) FOR DOMESTIC APPLIANCES



- CAN / CGA 6.10-M88 "Metal Connectors for Gas Appliances"
- ANSI Z21.24 "Metal Connectors for Gas Appliances"

1/2" FP x 1/2" FP

Part #	Length Inches	LIST
G303-3131-12-NDL	12	$27.10
G303-3131-24-NDL	24	$36.50
G303-3131-36-NDL	36	$42.80
G303-3131-48-NDL	48	$49.80
G303-3131-60-NDL	60	$63.90

3/4" FP x 3/4" FP

Part #	Length Inches	LIST
G403-4142-24-NDL	24	$59.50
G403-4142-36-NDL	36	$75.60
G403-4142-48-NDL	48	$90.60
G403-4142-60-NDL	60	$95.00
G403-4142-72-NDL	72	$120.60

PGP FLEXIBLE GAS PIPING SYSTEM

TRACPIPE / COUNTERSTRIKE

TracPipe CounterStrike Flexible Gas Piping by OmegaFlex. — ***– For Enhanced Lightning Protection*** PATENTED

Component	*Material*
TracPipe Flexible Gas Tubing	Corrugated Stainless Steel 300 Series with Polyethylene Jacket Plywood Reels for Packaging

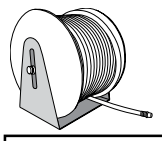



NOTE:
Other lengths available. Consult your local branch for availability.

Description Flexible Piping CSST	Part Number		Size	Pkg. Qty REEL LENGTH	Lb. Reel	LIST
3/8"	**CS-375**	**SS4-375**	3/8"	100 ft/reel	13	-
1/2"	**CS-500**	**SS4-500**	1/2"	100 ft/reel	18	$9.90
3/4"	**CS-750**	**SS4-750**	3/4"	100 ft/reel	59	$13.70
1"	**CS-100**	**SS4-100**	1"	100 ft/reel	32	$1,686.00
1 1/2"	**CS-150**	**SS4-150**	1 1/2"	150 ft/reel	80	-

Component	*Material*
Straight Mechanical Fitting	Brass Fitting AutoFlare Insert
Split Rings	Brass
Brass Coupling AutoFlare Insert	Brass
Brass Flange Mount Fittings	Brass
Termination Mount	Brass and Stainless Steel Plate

AutoFlare® Fittings

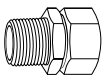

Straight Fitting



Female Straight



Coupling



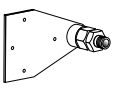



Description Fittings for ***TracPipe***	Part Number	Size	Pkg. Qty	Lb.	LIST
AutoSnap Straight 1/2"	**SFST-500**	1/2"	24/box	.4	$47.30
AutoSnap Straight 3/4"	**SFST-750**	3/4"	24/box	.4	$64.50
Spare Split Rings	**RING-375**	3/8"	10/pack	.06	-
Spare Split Rings	**RING-500**	1/2"	10/pack	.06	$23.80
Spare Split Rings	**RING-750**	3/4"	10/pack	.06	$28.90
Spare Split Rings	**RING-1000**	1"	10/pack	.06	$30.20
Spare Split Rings	**RING-1250**	1-1/4"	4/pack	.06	-
Spare Split Rings	**RING-1500**	1-1/2"	4/pack	.2	-
Spare Split Rings	**RING-2000**	2"	4/pack	.3	-
AutoFlare Female Straight *3/8"*	**FSTF-375**	3/8"-1/2"NPT	24/box	.25	-
AutoFlare Female Straight 1/2"	**FSTF-500**	1/2"	24/box	.33	$32.70
AutoFlare Female Straight 3/4"	**FSTF-750**	3/4"	16/box	.49	$47.10
AutoFlare Female Straight 1"	**FSTF-1000**	1"	16/box	.61	$43.70
Coupling- 3/8"	**CPLG-375**	3/8"	24/box	.3	-
Coupling- 1/2"	**CPLG-500**	1/2"	24/box	.5	$62.20
Coupling- 3/4"	**CPLG-750**	3/4"	16/box	.7	$80.00
Coupling- 1"	**CPLG-1000**	1"	16/box	.9	$133.60
Coupling 1-1/2"	**CPLG-1500**	1-1/2"	4/box	3.3	-
Coupling 2"	**CPLG-2000**	2"	4/box	5.5	-
Flange Fitting 3/8"	**BFF-375**	3/8"	12/box	.7	-
Flange Fitting 1/2"	**BFF-500**	1/2"	12/box	.7	$55.50
Flange Fitting 3/4"	**BFF-750**	3/4"	8/box	1.3	-
Flange Fitting 1"	**BFF-1000**	1"	8/box	1.5	-
Termination Mount 3/8"	**TM-375**	3/8"	12/box	.9	-
Termination Mount 1/2"	**TM-500**	1/2"	12/box	1	-
Termination Mount 3/4"	**TM-750**	3/4"	8/box	1.1	-

TracPipe By TracPipe Outlet

Tee - ***TracPipe*** 1/2"	**TF500-T500**	1/2 x 1/2"	14/box	1	$130.10
Tee - ***TracPipe*** 3/4"	**TF750-T750**	3/4 x 3/4"	12/box	1.6	-

All Prices Are Sold by the Foot

BLACK IRON STEEL PIPE FITTINGS

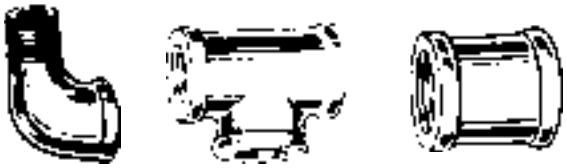

Black Pipe Fittings - 150 psi

Part #	Description	LIST
BSE-1/2X90	90° Banded Elbow	$4.30
BSE-3/4X90	90° Banded Elbow	$6.20
BSE-1X90	90° Banded Elbow	$9.60
BSSE-1/2 x 90	90° Street Elbow	$5.30
BSSE-3/4 x 90	90° Street Elbow	$7.70
BSSE-1 x 90	90° Street Elbow	$11.40
BSE-1/2X45	45° Banded Elbow	$4.30
BSE-3/4X45	45° Banded Elbow	$6.50
BSE-1X45	45° Banded Elbow	$9.60
BST-1/2	Banded Tee	$5.50
BST-3/4	Banded Tee	$7.90
BST-1	Banded Tee	$12.40
BSCAP-1/2	Banded Cap	$3.40
BSCAP-3/4	Banded Cap	$4.10
BSCAP-1	Banded Cap	$8.40
BSC-1/2X1/2	Banded Coupling	$3.40
BSC-3/4X3/4	Banded Coupling	$4.60
BSC-1X1	Banded Coupling	$7.60
BSC-3/4X1/2	Reducing Coupling	$5.70
BSC-1X1/2	Reducing Coupling	$8.40
BSC-1X3/4	Reducing Coupling	$7.60
BSB-3/4X1/2	Bushing	$4.50
BSB-1X3/4	Bushing	$6.00
BSU-1/2	Union	$21.50
BSU-3/4	Union	$27.50
BSU-1	Union	$32.30
BSP-1/2	Plug	$3.60
BSP-3/4	Plug	$4.60
BSP-1	Plug	$4.80

Other Sizes Available



Black Welded Steel Pipe Nipples

Part #	LIST
BSN-1/2XCLOSE	$4.40
BSN-1/2X1-1/2	$4.60
BSN-1/2X2	$5.30
BSN-1/2X2-1/2	$5.30
BSN-1/2X3	$6.80
BSN-1/2X3-1/2	$6.80
BSN-1/2X4	$8.00
BSN-1/2X4-1/2	$8.00
BSN-1/2X5	$9.10
BSN-1/2X5-1/2	$9.10
BSN-1/2X6	$9.50
BSN-3/4XCLOSE	$5.50
BSN-3/4X1-1/2	$5.70
BSN-3/4X2	$6.10
BSN-3/4X2-1/2	$6.10
BSN-3/4X3	$7.60
BSN-3/4X3-1/2	$7.60
BSN-3/4X4	$8.90
BSN-3/4X4-1/2	$8.90
BSN-3/4X5	$10.50
BSN-3/4X5-1/2	$10.50
BSN-3/4X6	$11.40
BSN-3/4X12	$29.30
BSN-3/4X18	$39.90
BSN-3/4X24	$48.00
BSN-3/4X48	$95.80
BSN-3/4X60	$119.10
BSN-3/4X72	$135.90

NOTE: Steel prices may change

NATURAL GAS BALL VALVES

Pipe (Female to Female)

Part #	Pipe	Temp F.	LIST
BV2103-C-FAI	3/8	-40° to +300°	$11.40
BV2103-D-FAI	1/2	-40° to +300°	$15.40
BV2103-E-FAI	3/4	-40° to +300°	$21.70



ACCESS FITTING TOOLS

Valve Core Tool



Contains 1/4" bit with 6 extra 1/4" valve cores & new thread chaser bit

Part #	Description	LIST
A32004	1/4" valve tool	$24.90

Core Storer



All steel valve core remover and storage container. Four replacement cores are included with each tool.

Part #	Description	LIST
02-C32004-ALL	Core Remover and Storer	$52.30



Education/Recovery Tool

Designed to quickly attach to and penetrate copper refrigerant lines. Permits speedy recovery of refrigerant before service. Fits all sizes from 1/4" to 7/8" O.D.

Part #	Description	LIST
A32100	Ref'n recovery plier	$233.80
A32101	Replacement tip	$36.70
19022	Replacement gasket	$44.30



JB Evacuation Recovery Tool

Use this tool to puncture large holes into recovery unit lines for quick and emergency discharge. Fits 3/16" to 7/8" O.D. hard tubing.

Part #	Description	LIST
A32100	JB Evacuation Recovery Tool	$233.80

4 in 1 Ball Valve Tool

Remove and replace Schrader cores without losing charge.

1. **Vacuum valve.** Extra 1/4" side port to attach electronic micron vacuum gauge right at system for greater accuracy.
2. **Core removal access.** Lets you evacuate and charge through an unrestricted line for increased speed and higher vacuum.
3. **Core replacement.**
4. **Recovery valve.** Core removal allows recovery unit to work at maximum efficiency, speeding the recovery process.



A32525N





Part #	Description	LIST
A32525N	Core remover with port	$205.20
18975	Vacuum/charge ball valve	$240.60
18980	Accessory set - 2 piece	$166.30
18978	Schrader rethreading accessory	$125.20
18979	Broken Schrader remover acc.	$85.10
18997	Grappler rod/nut assembly	$85.20
18973	Gasket for 18975 (5pk)	$30.40
18974	Seal kit incl. core, cap, 3 "O"-rings, gasket	$52.00

Valve Core Torque Tool

Valve core torque tool sets proper torque every time. Calibrated to precise torquing requirements for core valves, the tool will no longer tighten once proper torque is achieved. Eliminates guess work which results in under or over torquing of cores.



Part #	Description	LIST
A32008	1/4" valve core torque tool	$74.50

ACCESS VALVES

Quick Tap

Valve core in the 1/4" male port. Simply pierce the line and back seat the needle. Flow starts when depressor type charging hose is connected.



Part #	Description	LIST
QT-1	Quick Tap 1/4", 5/16", 3/8" OD Tube	$26.20
QT-2	Quick Tap 1/2", 5/8" OD Tube	$17.90

Line Tap Valves

All have depressor valve action for direct charging hose connections. All automatically close when you remove the charging hose. The valve is clamped to the line by 2 socket head screws. The depressor pin pierces the line when the wing cap is threaded on. Removing the wing cap closes the valve and the line is ready for connection of a charging hose.

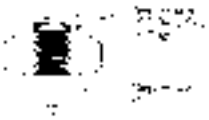



Part #	Description	LIST
QTM-1	Tubing Size OD - 1/4", 5/16", 3/8"	$16.10
QTM-2	Tubing Size OD - 1/2", 5/8"	$20.00

Line Taps with Adjustable Flow Control

Valve handle control makes it easy and fast to charge, discharge and test refrigeration and A/C systems. Valves may be easily attached with 3 Phillips head screws under pressure and in any position.



Part #	Description	LIST
QTH-1	Tubing Size OD - 3/16", 1/4", 5/16", 3/8"	$121.50
QTH-2	Tubing Size OD - 3/8", 1/2", 5/8"	$103.20

Water Line Tap Valves

No cutting or soldering requiReducer Ideal for use in tapping water lines. Stainless steel piercing needle which cuts a 5/32" hole. Built-in water shut-off.



Part #	Description	LIST
QAV-2	1/4" Compression - 3/8" thru 1-1/4"	$55.30

ACCESS VALVES

Bullet Piercing Valves



Install on the high side as a permanent valve on the job. The Bullet Piercing Valve will not leak. Install on round suction lines or uneven tubing.

Part #	Description	LIST
BPV31	1/4", 5/16", 3/8"	$16.00
BPV21	1/2", 5/8"	$11.60

Access Control Valve



The A33000 Steel Access Control Valve controls the flow of all 1/4" male flare depressor type valves.

Part #	Description	LIST
A33000	Access Control Valve	$123.50

Gas Retention Valve



Sturdy valve controls refrigerant flow from access fitting. Closes Schrader before disconnecting. Back seat valve feature to retain gas in hose when disconnecting.

Part #	Description	LIST
18993	Access Control Valve	$86.90

DRIERS

Service Driers



- 100% XH-9 molecular sieve is specially formulated for the new refrigerants and blends, including R-134a, R-404a and R-507
- Compatible with mineral oils and the new synthetics (P.O.E's)
- All copper construction for corrosion resistance

Part #	Description	Overall Length	Inlet Tube Size	Outlet Tube Size	Refrig. 12 Water Cap. in Drops		Refrig. 22 Water Cap. in Drops		Refrig. 134a Water Cap. in Drops		Tonnage		LIST
					75°F	125°F	75°F	125°F	75°F	125°F	R-12 & R-134a	R-22	
RSL3	3/4" Non-Directional	7-3/8"	1/4"OD/3/16"ID	1/4"OD/3/16"ID	33	28	30	25	37	35	1/3	1/2	$15.80
RSL4	1" Non-Directional Step Down	10-1/2"	1/4"OD/3/16"ID 5/16"OD/1/4"ID 3/8"OD/5/16"ID	1/4"OD/3/16"ID 5/16"OD/1/4"ID 3/8"OD/5/16"ID	66	56	60	50	74	70	3/4	1	$10.20
RSL5	1" w/Access Valve	9-1/2"	5/16"OD/1/4"ID	.127/.130 Cap Tube	66	56	60	50	74	70	1	2	$29.40

ACCESS FITTINGS



EC39EZ067



VA



A31999



"CD" Series



VAU-24



VAX



VE-2



VS-4

Part #	Alt #	J/B #	Description	LIST
NFT5-4	VC-4		1/4" Flare Cap	$1.40
NFT5-5	AVC410		1/2 -20 UNF (5/16) for R410 Mini Split Systems	
NFT5-6			3/8" Flare Cap	$4.30
A31999		A31999	Replacement Valve Core 5/pk	$10.30
CD-5514	CS-04		Self Tapping, Saddle Access Ftg. 1/4" Tubing	$21.40
CD-5516	CS-05		Self Tapping, Saddle Access Ftg. 5/16" Tubing	$20.00
CD-5538	CS-06		Self Tapping, Saddle Access Ftg. 3/8" Tubing	$21.90
CD-5512	CS-08		Self Tapping, Saddle Access Ftg. 1/2" Tubing	$23.50
CD-5558	CS-10		Self Tapping, Saddle Access Ftg. 5/8" Tubing	
CD-5534	CS-12		Self Tapping, Saddle Access Ftg. 3/4" Tubing	$33.30
CD-5578	CS-14		Self Tapping, Saddle Access Ftg. 7/8" Tubing	
CD-5518	CS-18		Self Tapping, Saddle Access Ftg. 1-1/8" Tubing	
VA3-346		A31720	For 1/8" O.D. Tubing or 1/4 and 5/16 Solder Ftng	$4.90
VA-24	AV-24	A31722	Straight Solder Type 1/8" O.D.S.	$10.60
VA-34	AV-34	A31723	Straight Solder Type 3/16" O.D.S. x 1/4" O.D.F.	$6.00
VA-46	AV-46	A31724	Straight Solder Type 1/4" O.D.S. x 3/8" O.D.F.	$5.20
VA-58		A31725	Straight Solder Type 5/16" O.D.S. x 1/2" O.D.F.	$31.00
VA-68		A31726	Straight Solder Type 3/8" O.D.S. x 1/2" O.D.F.	
VAU-24	AVU-24	A31482	Half Union 1/8" MPT	$5.40
VAU-45	AVU-45	A31484	Half Union 1/4" MPT	$6.00
VAX-2	AVX-2	A31002	Extended Copper Tube 1/8" O.D. Tube	$6.10
VAX-3	AVX-3	A31003	Extended Copper Tube 3/16" O.D. x 1/8" I.D.	$6.30
VAX-4	AVX-4	A31004	Extended Copper Tube 1/4" O.D. x 3/16" I.D.	$6.30
VAX-5	AVX-5	A31005	Extended Copper Tube 5/16" O.D. x 1/4" I.D.	$6.50
VAX-6	AVX-6	A31006	Extended Copper Tube 3/8" O.D. x 5/16" I.D.	$6.60
VAX-8		A31008	Extended Copper Tube 1/2" O.D.	$17.00
VE-2		A31492	Threaded Elbow 1/8" MPT	$12.80
VS-4	AVS-4	A31734	1/4" Fem. Flare Forged Swivel Nut with Depressor	$14.40

ACCESS FITTINGS



VST-4



VT-24



VTR-24



VTS-46



VTS-3-10



VU-4



VUR-4



A33600



QC-S5

Part #	Alt #	J/B #	Description	LIST
VST-4	AVS-64	A31851	1/4" Acc. on Run x 1/4" Fem. Flare Swivel Tee w/Perm. Depressor	$16.60
VST-44	AVS-44	A31852	1/4" Acc. on Run x 1/4" Acc. on Tee Fem. Swivel on Run	$16.80
VT-24		A31452	Threaded Tee 1/8" MPT on Branch,1/4" Fl. x 1/4" Fl. Acc. on Run	$22.10
VTR-24		A31512	Threaded Tee 1/8" MPT x 1/4" Male Flare on Run x Acc. on Branch	$14.40
VTS-10		A31140	Solder Tee Type 5/8" O.D. Tube	$25.10
VTS-12		A31142	Solder Tee Type 3/4" O.D. Tube	$33.30
VTS-14		A31144	Solder Tee Type 7/8" O.D. Tube	$38.60
VTS-46	AVT-4	A31134	Solder Tee Type 1/4" O.D.S. x 5/16" O.D.F.	$13.30
VTS-56	AVT-5	A31135	Solder Tee Type 5/16" O.D.S. x 3/8" O.D.F.	$20.80
VTS-68	AVT-6	A31136	Solder Tee Type 3/8" O.D.S.	$17.80
VTS3-10		A31160	Solder Tube Elbow 5/8" O.D.S.	$73.10
VTS3-12		A31162	Solder Tube Elbow 3/4" O.D.S.	$74.60
VTS3-14		A31164	Solder Tube Elbow 7/8" O.D.S.	$74.10
VTS3-18		A31168	Solder Tube Elbow 1-1/8" O.D.S.	$96.70
VU-4		A31614	Fem. Flare Union 1/4" Fem. Flare Furnished with Copper Gasket	$12.70
VUR-4	AVU-45	A31424	Full Union 1/4" O.D. Flare Tube Furnished with Forged Flare Nut	$17.50
A33600	SF1808		Oil Tap with 12" Tube	$52.30
QC-S5S	AD87	A31656	Mini-split Adapter 5/16F x 1/4M Flare	$29.00

ACCESS QUICK COUPLERS

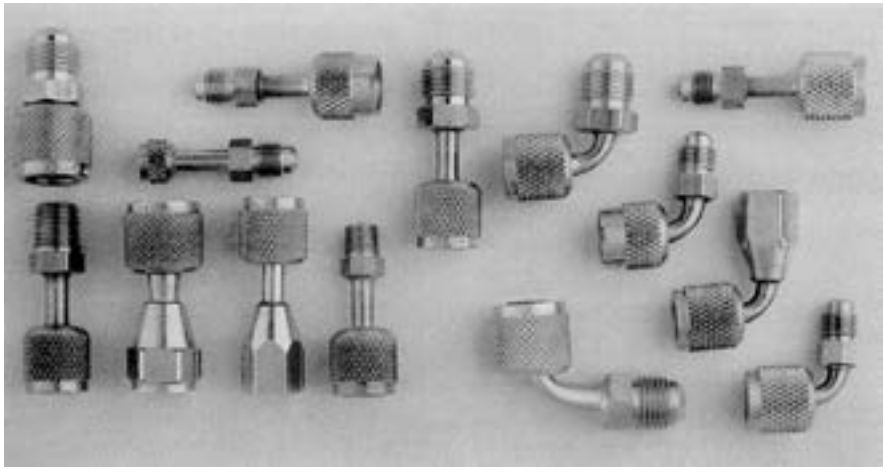

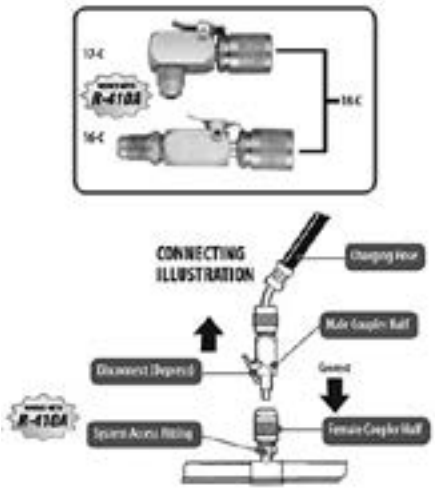

Part #	J/B #	Description	LIST
SEALRIGHT Q/C			
19109	10234	1/4" SealRight Str. x 1/4" Male Flare	$62.00
19208		1/4" SealRight 45° x 1/4" Male Flare	$64.60
19209	10248	1/4" SealRight 90° x 1/4" Male Flare	$63.30
19117	18118	1/4" SealRight Str. x 3/8" Male Flare	$74.10
19217		1/4" SealRight 90° x 3/8" Male Flare	$77.00
19128		1/4" SealRight Str. x 1/8" Female NPT	$75.80
19129		1/4" SealRight Str. x 1/4" Female NPT	$79.10
19169		Acme 1/2" SealRight x 1/2" Acme	$86.80
19163		Acme 1/2" SealRight x 1/4" Male Flare	$87.70
STANDARD Q/C			
19125	CQC-S4A	1/8" Female QC x 1/4" Male Flare (Ford)	$58.00
19120		3/16" Female QC x 1/4" Male Flare (GM)	$92.50
19101	CQC-S4	1/4" Female QC x 1/4" Male Flare	$35.80
19102	13023	1/4" Female QC x 3/8" Male Flare	$44.90
19111		1/4" Female QC Str. x 1/8" Male NPT	$62.50
19116		1/4" Female QC Str. x 1/4" Male NPT	$47.50
19118		1/4" Female QC Str. x 1/4" Female NPT	$80.20
19104	CQC-S64	3/8" Female QC x 1/4" Male Flare	$67.10
19115		1/2" Female QC x 3/8" Male Flare	$74.10
19220		3/16" Female QC 90° x 1/4" Male Flare	$95.40
19201	CQC-E4	1/4" Female QC 90° x 1/4" Male Flare	$37.50
19203		3/8" Female QC 90° x 3/8" Male Flare	$75.80
19110		1/4" Female QC x 1/8" Female NPT	$62.30
19210		1/4" Female QC 90° x 1/8" Female NPT	$43.70
19161		1/4" Female QC x 1/2" Male Acme	$55.70
19162		1/4" Female Hex x 1/2" Male Acme for Permanent Applications	$55.70
19166		1/2" Acme Male x 1/2" Acme Female	$89.70
19165		1/2" Acme Female x 1/4" Male Flare	$89.70
19168		1/2" Acme Female x 1/8" Male NPT	$62.50
19158		1/2" Acme Female x 14mm Male	$130.70
16C		Straight Coupler (45° Flare) 1/4" Female x 1/4" Male	$38.90
17C		90° Elbow Coupler (45° Flare) 1/4" Female x 1/4" Male	$49.70
18C		(Set) Includes 16-C and 17-C	$85.90

VIBRATION ABSORBERS

Coolmate Vibration Absorbers

Featuring Stainless Steel Corrugated Tubing and High Tensile Wire Braid With Pure Copper Connections

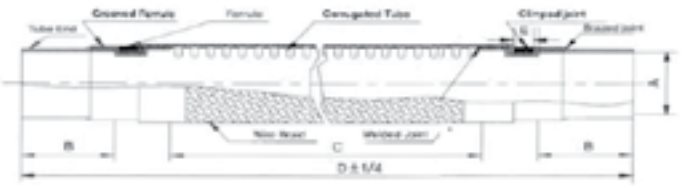

For Refrigeration and Air Conditioning Systems

Part #	To Fit Copper Tube Actual OD (in)	Length (in) ± 1/4"	Maximum Working Pressure	Burst Pressure (PSIG)	LIST
VAS-014	1/4"		650	3250	$32.40
VAS-038	3/8"	8.46"	650	3250	$35.10
VAS-012	1/2"	8.86"	650	3250	$37.50
VAS-058	5/8"	9.72"	650	3250	$41.00
VAS-034	3/4"	10.47"	650	3250	$54.80
VAS-078	7/8"	11.85"	650	3250	$57.80
VAS-118	1-1/8"	12.95"	600	3250	$76.40
VAS-138	1-3/8"	15.43"	550	3000	$108.10
VAS-158	1-5/8"	16.73"	510	2550	$139.90
VAS-2-1/8	2-1/8"	20.47"	400	2000	-
VAS-258	2-5/8"	24.13"	400	1750	$396.00
VAS-318	3-1/8"	26.77"	320	1600	$636.00
VAS-358*	3-5/8"	31.97"	190	570	$832.00
VAS-418*	4-1/8"	32.76"	190	570	$971.00

* For low side use only.

R-410A requires a working pressure of 600 PSI or more. Please note working pressures

FLEXIBLE PULL-OUT HOSE

AEROQUIP

FC802 Flexible Hose

- Compatible for both refrigerant and water supply makes this a good choice for ice machines, freezers and coolers.
- Heat, corrosive and kink resistance
- Maximum effusion resistance
- Max. Operating Pressure: 500 PSI
- Min. Burst Pressure: 2500 PSI
- Temperature Range: -40°F to 250°F



Part #	Description	LIST			
		36" Line Size	48" Line Size	60" Line Size	72" Line Size
FC802-04-4401	1/4" ID HOSE w/ 1/4" FF conn.	$137.30	$165.60	$193.50	$213.50
FC802-06-4401	3/8" ID HOSE w/ 3/8" FF conn.	$180.40	$232.10	$272.80	$314.00
FC802-08-4401	1/2" ID HOSE w/ 1/2" FF conn.	$140.20	$274.80	$439.00	$355.00
FC802-10-4401	5/8" ID HOSE w/ 5/8" FF conn.	$273.20	$347.00	$568.00	$460.00

Other Line sizes and Lengths are ***available upon request***. Please allow three to five working days for delivery after order.

NOTE: FC802 is not compatible with R717 but other product is available. Please ask your local branch for more information.

FILTER DRIERS

NDL

NDL Filter Drier with TW



Filter Drier Pre-charge with Tracer Wafer® to help you find the exact source of Refrigerant Leak

- Filter Drier pre-charged with Spectroline TRACER WAFER® impregnated with fluorescent dye.
- OEM approved Filter Drier
- Dye approved by all leading Compressor & Refrigerant manufacturers.
- Compatible with all Refrigerants.
- Proven technology: Over 250 million systems installed till date.

Suction Line Filter & Replaceable Filter Drier Core

Model No.	Recommended Refrigerant Type	Function	R-134A		R-22		R-407C		R-404A / R-507		R-410A		R-502		R-744		LIST
			75°F	125°F	75°F	125°F	75°F	125°F	75°F	125°F	75°F	125°F	75°F	125°F	14°F	75°F	
NB-48-NDL	CFC, HCFC, HFC	Premium Universal Replacement	1463	1343	1358	1233	1188	904	1517	1427	1122	813	1532	1323	1362	1596	$77.60
NB-48-NDL	CFC, HCFC, HFC	Burnout cleanup	445	338	385	260	334	190	480	332	286	150	511	352	377	444	$77.60
NC-48-NDL	CFC,HCFC	High Acid and water Removal	777	619	687	501	512	328	829	615	437	260	739	546	315	369	$77.60
NC-100-NDL	CFC,HCFC,HFC	Burnout cleanup	1239	934	1079	714	723	417	1336	911	659	353	1104	762	-	-	$175.10
NPE-48-BD-NDL	CFC,HCFC,HFC	Filter (Suction with Fabric)	NA														$158.80
NSS-48-NDL	CFC,HCFC,HFC	Filter (Suction Only)															$90.80

1. Water Capacities are based on: Equilibrium Point Dryness (EPD) of:
   - 50 parts per million for R-134a, R404-A/R-410A and R-407C
   - 60 parts per million for R-22
   - 15 parts per million for R-12

2 . 20 drops of water = 1 gram = 1 cc
3. Include one neoprene composite lid gasket and one core gasket.
Al cores include a universal neoprene composite gasket kit which includes 2 sizes of replacement lid gaskets, and gaskets for the top and bottom of the core or filter

Liquid Line Filter Drier - NCH Series (Solid Core Type) Selection Recommendations

Model No.	Connections Inlet/Outlet	Flow Capacity Tan @ 1psi ΔP (for kw multiply Ton by 3.5)				Water Capacity drops of water										LIST
						R-134A		R-22		R-407C		R-410A		R-404A / R-507		
		R-134a	R-22 & R -410A	R-407C	R-404A & R-507	75°F	125°F	75°F	125°F	75°F	125°F	75°F	125°F	75°F	125°F	
NCH-032S-TW-NDL	1/4" ODF	2	2	2	1.42	80	74	75	69	63	52	53	42	82	78	$49.40
NCH-033S-TW-NDL	3/8' ODF	4.85	4.85	5.42	3.7											$49.40
NCH-052F-TW-NDL	1/4" SAE	2	2.28	2.28	1.42	201	186	186	136	156	126	131	101	206	196	$67.50
NCH-052S-TW-NDL	1/4" ODF															$67.50
NCH-053S-TW-NDL	3/8" ODF	5.14	5.42	5.42	4											$67.50
NCH-082F-TW-NDL	1/4" SAE	2	2.28	2.28	1.42	265	245	250	225	205	165	170	130	275	260	$84.50
NCH-082S-TW-NDL	1/4" ODF															$84.50
NCH-083F-TW-NDL	3/8" SAE	5.42	6	6	4											$84.50
NCH-083S-TW-NDL	3/8" ODF															$74.40
NCH-084S-TW-NDL	1/2' ODF	7.42	8.28	8.28	5.71											$84.50
NCH-163F-TW-NDL	3/8" SAE	6.2	6.8	6.8	4.57	396	366	271	336	306	246	256	196	406	286	$99.80
NCH-163S-TW-NDL	3/8" ODF															$88.10
NCH-164F-TW-NDL	1/2" SAE	8.5	9.4	9.4	6.2											$99.80
NCH-164S-TW-NDL	1/2" ODF															$99.80
NCH-165S-TW-NDL	5/8" ODF	12.2	13.4	13.4	8.57											$99.80
NCH-303F-TW-NDL	3/8" SAE	6	6.57	6.57	4.28	877	812	822	752	687	552	567	432	907	857	$149.10
NCH-303S-TW-NDL	3/8" ODF															$149.10
NCH-304F-TW-NDL	1/2" SAE	8.85	9.71	9.71	6.28											$116.60
NCH-304S-TW-NDL	1/2" ODF															$149.10
NCH-305F-TW-NDL	5/8" SAE	12.85	14	14	9.42											$149.10
NCH-305S-TW-NDL	5/8" ODF															$149.10
NCH-306S-TW-NDL	3/4" ODF	17.71	19.42	19.42	12.85											$153.60
NCH-307S-TW-NDL	7/8" ODF															$158.20
NCH-309S-TW-NDL	1-1/8" ODF															$174.40
NCH-414S-TW-NDL	1/2" SAE	9.14	10	10	6.57	1216	1106	1146	1016	951	746	786	586	1266	1162	$189.30
NCH-415F-TW-NDL	5/8' SAE	15.14	16.57	16.57	10.57											$189.30
NCH-415S-TW*D	5/8" ODF															
NCH-417S-TW-NDL	7/8" ODF	26	28.57	28.57	18.57											$225.40
NCH-419S-TW-NDL	1-1/8" ODF															$261.50

All ratngs are in accordance with ANSI/AHRI Standard 710-2009
1. Water in refrigerant at EPD for : R-134a/R-407C/R-410A/R-404A/R-507A is 50 ppm, R-22 is 60 ppm.

2. Flow Capacities are based on following standard rating
Flow Rate per Ton of Refrigeration at 86°F Liquid & 5.0°F Saturated Vapor for : R-134a is 3.1 lb/min/ton, R-407C is 3.0 lb/min/ton, R-410A is 2.8 lb/min/ton, R-404A is 4.1 lb/min/ton, R-404A is 4.1 lb/min/ton, R-507A is 4.2 lb/min/ton,R-22 is 3.0 lb/min/ton.

Tool and Jaw Compatibility Matrix

			JAW MANUFACTURER				
			Klauke®			RIDGID®	Milwaukee®
TOOL MANUFACTURER	Model(s)	Size Range	15 kN	19 kN	32 kN	24 kN	32 kN
Klauke®	MAP2L	1/4" – 1-1/8"	✓				
	MAP2L19	1/4" – 1-3/8"		✓			
	UAP 332	1/4" – 1-3/8"			✓		✓
	UAP 432	1/4" – 1-3/8"			✓		✓
ROTHENBERGER	Romax Compact	1/4" – 1-3/8"		✓			
	Romax 3000	1/4" – 1-3/8"			✓		✓
	Romax 4000	1/4" – 1-3/8"			✓		✓
NIBCO®	PC-20 M	1/4" – 1-1/8"	✓				
RIDGID	RP 200 RP 210 RP 240 RP 241	1/4" – 1-3/8"				✓	
	RP 330 RP 340 RP 350 RP 351	1/4" – 1-3/8"			✓		✓
Milwaukee®	M12	1/4" – 1-3/8"				✓	
	M18	1/4" – 1-3/8"			✓		✓
viega	Pressgun Picco 6	1/4" – 1-3/8"				✓	
	Pressgun 6	1/4" – 1-3/8"			✓		✓
novopress	ACO103	1/4" – 1-3/8"		✓			
	ACO203	1/4" – 1-3/8"			✓		✓
	ECO203	1/4" – 1-3/8"			✓		✓
	EFP203	1/4" – 1-3/8"			✓		✓
DEWALT	DCE200	1/4" – 1-3/8"			✓		✓

Only RLS-approved tools and jaws can be used to install RLS fittings.

KLAUKE 32KN
TOOLS AND JAWS

SIZE	PART NUMBER	PRICE
1/4"	399021321040-RLS	$1,102.00
3/8"	399021321060-RLS	$1,102.00
1/2"	399021321080-RLS	$1,102.00
5/8"	399021321100-RLS	$1,102.00
3/4"	399021321120-RLS	$1,102.00
7/8"	399021321140-RLS	$1,152.00
1-1/8"	399021321180-RLS	$1,152.00
1-3/8"	399021321220-RLS	$1,152.00

AVALIABLE NOW:

32kN Tool (no jaws) + (2) 4.0 Makita Batteries
Part Number: 399011320001

8-Jaw Kit (No Tool) + Accessories (1/4", 3/8", 1/2", 5/8", 7/8", 1-1/8" 1-3/8"
Part Number: 399031320801

**Accessory Kit includes: Press gauge, depth gauge, abrasive pad and marker*

32 kN Tool Feautures:

- Pressing Force: 32 kN
- Presses/Charge: 350-400 (4.0 Ah)
- Battery Capacity: 18V / 4.0 Ah Li-Ion Makita (BL1820B)
- Charging Time: 15 min
- Operating Temp. Range: -10 ° C to 40° C (14° F to 104 °F)
- Weight with Battery:
  - ***Without Jaw:*** 3.6kg (8.0 lb)
  - ***Including Jaw:*** 5.7 kg (12.5 lb)
- Dimensions: 359 x 76 x 317 mm

Jaws are compatible with Milwaukee M18 and RIDGID RP300 Se ries tools





MILWAUKEE M18

MILWAUKEE ® PRESS TOOL CHEAT SHEET
TOOL CAPACITY






	CTS "PRO PRESS"	IPS "MEGA PRESS"	PEX CRIMP	ACR
M18™ SHORT THROW ***(2674-22C)*** 	N/A	N/A	1"	N/A"
M12™ FORCE LOGIC™ ***(2473-20)*** 	1 1/4"	3/4"	1 1/2"	1 3/8"
M18™ FORCE LOGIC™ w/ONE-KEY™ ***(2922-20)*** 	4"	2"	2"	1 3/8"
M18™ FORCE LOGIC™ Long Throw ***(2773-20L)*** 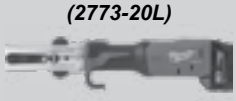	4"	4"	2"	1 3/8"

**SHORT THROW models have a unique jaw design and must be used with Milwaukee SHORT THROW jaws*
** Using 3rd party jaws for M12 FORCE LOGIC*

MILWAUKEE M18

PRESS TOOL CHEAT SHEET - PIPING STANDARD

TYPE	COPPER TUBE SIZE (CTS)	IRON PIPE SIZE (IPS)	AIR CONDITIONING/ REFRIGERATION (ACR)
SIZING CONVENTION	*Actual outside diameter (OD) - 1/8" greater and the nominal/ listed size* *Example: 1" inch copper tybe is actually 1 1/8"*	*Legacy sizing convention used since 19th century where nominal or listed size is not the actual outside diameter or inside diameter (ID)*	*Nominal / Listed size = the actual outside diameter* *Example: 1" ACR tubing is actually 1"*
MOST COMMON USE	*Portable Water Installation (supply lines to water heaters, showers, sinks, tubs)*	*Heating and Cooling Systems, Drainage Systems*	*Refrigerant Lines (Liquid and Suction Lines for HVAC/VRF systems, AC's and Furnaces*
TYPICALLY CARRIES	*Potable Water*	*Gases and Fuels / Non-Potable Water and Liquids*	*Refrigerant*
TYPICAL SYSTEM PRESSURE RATING	*200 PSI*	*200 PSI*	*700 PSI*
TRADITIONAL CONNECTION METHOD	*Sweat and Solder*	*Thread, Weld, Groove*	*Braze*



Copper



Viega® ProPress® Stainless Steel



Black Iron Pipe (BIP)



Copper-Nickel (CuNi)



Stainless Steel



Polyvinyl Chloride (PVC)



Copper ACR

MILWAUKEE M18

MILWAUKEE ® PRESS TOOL CHEAT SHEET
RING JAW COMPATIBILITY





	CTS "PRO PRESS"	IPS "MEGA PRESS"	ACR "MUELLER STREA
RING JAW 1 *(49-16-2659)* 	2 1/2 " *49-16-2656*  3" *49-16-2657*  3" *49-16-2658* 	1 1/4" 49-16-2653B  1 1/2" 49-16-2654B  2" 49-16-2655B 	1 1/8" 49-16-2657M 
Ring Jaw 2 *(49-16-2659S)* 		2 1/2" 49-16-2656B  3" 49-16-2657B  4" 49-16-2658B 	

PRESS TOOL CHEAT SHEET - JAWS

		1/2"	3/4"	1"	1-1/4"	1-1/2"	2"	2-1/2"	3"	4"
CTS "Pro Press"	M12	Included in 2473-22			49-16-2453					
	M18	Included in 2922-22						49-16-2690		
IPS "Mega Press"	M12	49-16-2496B								
	M18	49-16-2696			49-162697 (includes 1/2"-2")			49-16-2698		
Pex Crimp	M12	49-16-2451C	49-16-2453C	49-16-2454C	49-16-2455C	49-16-2456C				
	M18	49-16-2651C	49-16-2653C	49-16-2654C	49-16-2655C	49-16-2656C	49-16-2657C			

		1/4"	3/8"	1/2"	5/8"	3/4"	7/8"	1-1/8"	1-3/8"
ACR Muellar Streamline	M12								
	M18	49-16-2650M	49-16-2652M	49-16-2653M	49-16-2654M	49-16-2655M	49-16-2656M	49-16-2657M	
		49-16-2661M or included in 2922-22M							
ACR RLS	M12**	770210	770212	770213	770214	770215	770216	770217	770218
	M18	49-16-2650R	49-16-2652R	49-16-2653R	49-16-2654R	49-16-2655R	49-16-2656R	49-16-2657R	49-16-2658R
		49-16-2660R							

• All Jaws Available Individually - see Press Catalog. Compatible only with FORCE LOGIC press tools; incompatible with SHORT THROW models

BRAZE-FREE FITTINGS

RAPID LOCKING SYSTEMS

Features

- Lightweight design increases productivity
- Short pressing cycle, 5-7 seconds
- Compact design and 350° jaw rotation allows technician to install in tight spaces
- Automatic piston return
- Safety feature that allows crimp cycle to be interrupted
  - Feature allows manual release of piston, if needed
- High-quality, powerful Makita Li-Ion technology for lasting, battery-powered pressing
  - 100-150 Crimps per charge
  - Short charging time of just 15 minutes (2.0 Ah)
  - Makita batteries and chargers available worldwide.
- Tool service indicated via imbedded LEDs, illuminates at 10,000 cycles
- Tool Warranty is 24 months from date of purchase
- Crimp tools are not sold separately



Klauke® 19 kN

MODEL MAP2L19

- **Available in Tool Kit:**
  0 Jaw Tool Kit
  PZK-TK190, P/N 770026
  5 Jaw Tool Kit
  PZK-TK195, P/N 770028;
- **For use with KJ Series Jaws**
- **8-Jaw Kit & Individual Jaws Sold Separately**
- **Approved Copper Tubing Types:**
  Hard Copper (Drawn)
  - 1/4" – 1-3/8" Type ACR, M, L, K

  Soft Copper (Annealed)
  - 1/4" – 1-3/8" Type ACR, L, K



Klauke® 15 kN

MODEL MAP2LCER

- **Available in Tool Kits:**
  0 Jaw Tool Kit
  PZK-TK0, P/N 770000;
  5 Jaw Tool Kit
  PZK-TK5, P/N 770002;
- **For use with J Series Jaws**
- **8 Jaw Kit & Individual Jaws Sold Separately**
- **Approved Copper Tubing Types:**
  Hard Copper (Drawn)
  - 1/4" – 1-1/8" Type ACR, M, L
  - Type K only up to 7/8"

  Soft Copper (Annealed)
  - 1/4" – 1-1/8" Type ACR, L
  - Type K only up to 7/8"

5 Jaw Tool Kits

Includes the Klauke crimping tool (choose from 2 models), 5 jaws, and tool kit contents, listed at below right.

- **Description:** PZK-TK5
- **Part Number:** 770002
- **Jaw Sizes (Inches):** 3/8, 1/2, 5/8, 7/8, 1-1/8
- **Includes Crimping Tool:** Klauke 15 kN MAP2LCER

- **Description:** PZK-TK195
- **Part Number:** 770028
- **Jaw Sizes (Inches):** 3/8, 1/2, 5/8, 7/8, 1-1/8
- **Includes Crimping Tool:** Klauke 19 kN MAP2L19

Tool Kits



0 Jaw Tool Kits

Includes a Klauke crimping tool and the tool kit contents, listed at below right.

- **Description:** PZK-TK0
- **Part Number:** 770000
- **Includes Crimping Tool:** Klauke 15 kN MAP2LCER

- **Description:** PZK-TK190
- **Part Number:** 770026
- **Includes Crimping Tool:** Klauke 19 kN MAP2L19

JAW KITS / PART NUMBER			
8 PIECE JAW KITS	J4-J18 770208 1/4, 5/16, 3/8, 1/2, 5/8, 3/4, 7/8, 1-1/8	KJ4-KJ22 770239 1/4, 3/8, 1/2, 5/8, 3/4, 7/8, 1-1/8, 1-3/8	RJ4-RJ22 770219 1/4, 3/8, 1/2, 5/8, 3/4, 7/8, 1-1/8, 1-3/8
JAW CASE (EMPTY)	770240 (9 empty slots)		770220 (8 empty slots)

Klauke Tool Kit Contents

- Klauke Crimping Tool
- Tubing Cutter
- Deburring Tool
- RLS Crimp Gauge
- RLS Depth Gauge
- Stainless Steel Brush
- Abrasive Pad
- Permanent Marker
- Battery Charger
- (2) Lithium-Ion Rechargeable Batteries

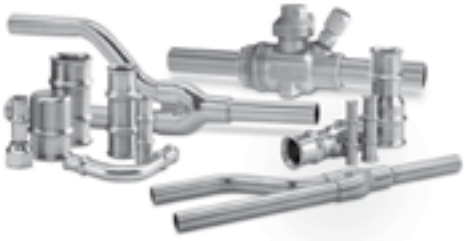



RIDGID 8 Jaw Kit

8 piece RIDGID jaw kit in hard plastic carrying case includes tube cutter, deburring tools, crimp gauge, depth gauge, stainless steel brush, abrasive pad, and permanent marker.

- **Description:** RJ4-RJ22 RIDGID
- **Part Number:** 770219 RJ Series Jaws
- **Jaw Sizes (Inches):** 1/4, 3/8, 1/2, 5/8, 3/4, 7/8, 1-1/8, 1-3/8 (5/16 jaw sold separately)
- **Compatible with RIDGID**
- **Compact Press Tool Models:** RP 100-B, RP 200-B, RP 210-B (Sold through RIDGID distributors)



Klauke 8 Jaw Kits

8 piece Klauke 15 kN jaw kit in hard plastic carrying case.

- **Description:** J4-J18 Klauke
- **Part Number:** 770208 J Series Jaws
- **Jaw Sizes (Inches):** 1/4, 5/16, 3/8, 1/2, 5/8, 3/4, 7/8, 1-1/8
- **Compatible with Klauke Model:** 15 kN MAP2LCER

8 piece Klauke 19 kN jaw kit in hard plastic carrying case.

- **Description:** KJ4-KJ22 Klauke
- **Part Number:** 770239 KJ Series Jaws
- **Jaw Sizes (Inches):** 1/4, 3/8, 1/2, 5/8, 3/4, 7/8, 1-1/8, 1-3/8 (5/16 jaw sold separately)
- **Compatible with Klauke Model:** 19 kN MAP2L19

Crimping Tools and Jaw Selection

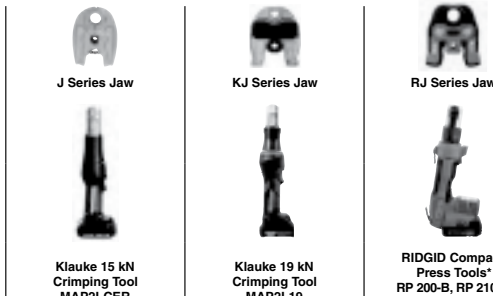

BRAZE-FREE FITTINGS

RAPID LOCKING SYSTEMS

Y Joint



Size	Part Number	Description
3/8	771102	PZK-Y6-NA
1/2	771103	PZK-Y8-NA
5/8	771104	PZK-Y10-NA
3/4	771105	PZK-Y12-NA
7/8	771106	PZK-Y14-NA
1-1/8	771107	PZK-Y18-NA

Caps



Size	Part Number	Description
1/4	770900	PZK-CP4-HNBR
5/16	770901	PZK-CP5-HNBR
3/8	770902	PZK-CP6-HNBR
1/2	770903	PZK-CP8-HNBR
5/8	770904	PZK-CP10-HNBR
3/4	770905	PZK-CP12-HNBR
7/8	770906	PZK-CP14-HNBR
1-1/8	770907	PZK-CP18-HNBR
1-3/8*	770908	PZK-CP22-HNBR

Flare Adapter



Size	Part Number	Description
1/4	771000	PZK-F4-HNBR
3/8	771002	PZK-F6-HNBR
1/2	771003	PZK-F8-HNBR
5/8	771004	PZK-F10-HNBR
3/4	771005	PZK-F12-HNBR

45° Elbow



Size	Part Number	Description
3/8	771402	PZK-45E6-HNBR
1/2	771403	PZK-45E8-HNBR
5/8	771404	PZK-45E10-HNBR
3/4	771405	PZK-45E12-HNBR
7/8	771406	PZK-45E14-HNBR
1-1/8	771407	PZK-45E18-HNBR
1-3/8	771408	PZK-45E22-HNBR

Long Radius Street Elbow -90°



Size	Part Number	Description
3/8	771302	PZK-90SE6-HNBR
1/2	771303	PZK-90SE8-HNBR
5/8	771304	PZK-90SE10-HNBR
3/4	771305	PZK-90SE12-HNBR
7/8	771306	PZK-90SE14-HNBR
1-1/8	771307	PZK-90SE18-HNBR
1-3/8	771308	PZK-90SE22-HNBR

Reducing Bushing

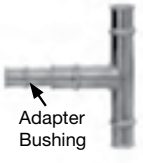

Size	Part Number	Description
1/2 to 3/8	771502	PZK-B86-HNBR
5/8 to 1/2	771505	PZK-B108-HNBR
3/4 to 5/8	771507	PZK-B1210-HNBR
7/8 to 3/4	771510	PZK-B1412-HNBR
1-1/8 to 7/8	771514	PZK-B1814-HNBR
1-3/8 to 1-1/8	771519	PZK-B2218-HNBR

P-Trap



Size	Part Number	Description
1/2	771203	PZK-PT8-NA
5/8	771204	PZK-PT10-NA
3/4	771205	PZK-PT12-NA
7/8	771206	PZK-PT14-NA
1-1/8	771207	PZK-PT18-NA
1-3/8	771208	PZK-PT22-NA

Coupling



Size	Part Number	Description
1/4	770500	PZK-C4-HNBR
5/16	770501	PZK-C5-HNBR
3/8	770502	PZK-C6-HNBR
1/2	770503	PZK-C8-HNBR
5/8	770504	PZK-C10-HNBR
3/4	770505	PZK-C12-HNBR
7/8	770506	PZK-C14-HNBR
1-1/8	770507	PZK-C18-HNBR
1-3/8*	770508	PZK-C22-HNBR

Slip Coupling



Size	Part Number	Description
1/4	770550	PZK-RC4-HNBR
3/8	770552	PZK-RC6-HNBR
1/2	770553	PZK-RC8-HNBR
5/8	770554	PZK-RC10-HNBR
3/4	770555	PZK-RC12-HNBR
7/8	770556	PZK-RC14-HNBR
1-1/8	770557	PZK-RC18-HNBR
1-3/8*	770558	PZK-RC22-HNBR

Elbow



Size	Part Number	Description
1/4	770600	PZK-90E4-HNBR
5/16	770601	PZK-90E5-HNBR
3/8	770602	PZK-90E6-HNBR
1/2	770603	PZK-90E8-HNBR
5/8	770604	PZK-90E10-HNBR
3/4	770605	PZK-90E12-HNBR
7/8	770606	PZK-90E14-HNBR
1-1/8	770607	PZK-90E18-HNBR
1-3/8*	770608	PZK-90E22-HNBR

Tee



Size	Part Number	Description
3/8	770702	PZK-T6-HNBR
1/2	770703	PZK-T8-HNBR
5/8	770704	PZK-T10-HNBR
3/4	770705	PZK-T12-HNBR
7/8	770706	PZK-T14-HNBR
1-1/8	770707	PZK-T18-HNBR
1-3/8*	770708	PZK-T22-HNBR

Reducer



Size	Part Number	Description
3/8 in to 1/4	770800	PZK-R64-HNBR
1/2 in to 1/4	770808	PZK-R84-HNBR
1/2 in to 3/8	770801	PZK-R86-HNBR
5/8 in to 1/4	770809	PZK-R104-HNBR
5/8 in to 3/8	770810	PZK-R106-HNBR
5/8 in to 1/2	770802	PZK-R108-HNBR
3/4 in to 1/2	770811	PZK-R128-HNBR
3/4 in to 5/8	770803	PZK-R1210-HNBR
7/8 in to 1/2	770812	PZK-R148-HNBR
7/8 in to 5/8	770804	PZK-R1410-HNBR
7/8 in to 3/4	770805	PZK-R1412-HNBR
1-1/8 in to 1/2	770813	PZK-R188-HNBR
1-1/8 in to 5/8	770814	PZK-R1810-HNBR
1-1/8 in to 3/4	770806	PZK-R1812-HNBR
1-1/8 in to 7/8	770807	PZK-R1814-HNBR

Zoomlock compatible components:
SOLENOID, CATCH-ALL, BALL VALVE, SEE-ALL
All available with ODM fittings for using with Zoomlock coupling.

Approved Refrigerants

- 1234yf
- 1234ze
- 125
- 134a
- 143a
- 404A
- 407A
- 407C
- 407F
- 410A
- 447A
- 448A
- 449A
- 450A
- 452A
- 452B
- 507
- 513A
- 718
- 32*
- 290*
- 600*
- 600a*

Product Parameters

- Continuous Operating Temperature:
  250°F / 121°C
- O-Ring Temperature Rating:
  -40°F to +300°F
  -40°C to +149°C
- Maximum Rated Pressure (MRP):
  700 psi / 48 bar
- Minimum Burst Pressure (UL 207):
  2,100 psi / 145 bar
- Vacuum Pressure Capability:
  20 Microns
- External Leak Rate:
  <0.1 Ounces of Helium per Year at Operating Pressure Range
- Vibration Resistance:
  Conforms to UL109
- Size Availability (Inches):
  1/4, 5/16, 3/8, 1/2, 5/8, 3/4, 7/8, 1-1/8, 1-3/8

Applications

- High Pressure HVAC/R
- Glycol
- Non-Potable Water

Fitting Materials

- Fitting Body:
  Refrigerant Grade Copper, per ASTM-B75 or ASTM-B743
- O-Ring:
  HNBR

Fitting Warranty

- 5 years from date of install.

Agency Approvals and Certifications

- UL 207, SA#33958, SDTW(7)
- ICC-ES, PMG-1296
  - 2015 IMC
    (International Mechanical Code)
  - 2015 IRC
    (International Residential Code)
  - 2015 UMC
    (Uniform Mechanical Code)
- CRN
  - Approved for couplings and 90 degree elbows
- **Approved Copper Tubing Types for Use with Klauke® 15 kN Compatible Jaws:**
  Hard Copper (Drawn)
  - 1/4" – 1-1/8" Type ACR, M, L
  - Type K only up to 7/8"

  Soft Copper (Annealed)
  - 1/4" – 1-1/8" Type ACR, L
  - Type K only up to 7/8"
- **Approved Copper Tubing Types for Use with Klauke® 19 kN and RIDGID® Compatible Jaws:**
  Hard Copper (Drawn)
  - 1/4" – 1-3/8" Type ACR, M, L, K

  Soft Copper (Annealed)
  - 1/4" – 1-3/8" Type ACR, L, K

BRAZE-FREE FITTINGS

RAPID LOCKING SYSTEMS COMPATIBLE COMPONENTS



Compatible Components

To make a system convenient to install ODM x ODM ZoomLock compatible components are available including:

- **Ball Valves**
- **Filter-Driers**
- **Moisture and Liquid Indicators**
- **Solenoid Valves**



Description	Connection Size (ODM x ODM)	Part Number
C-083-PZK	3/8″	761000
C-163-PZK	3/8″	761200
C-164-PZK	1/2″	761201
C-165-PZK	5/8″	761202
C-167-PZK-T-HH	7/8″	761203
C-147-PZK-TT-HH	7/8″	761100
C-304-PZK	1/2″	761300
C-305-PZK	5/8″	761301
C-309-PZK-T-HH	1-1/18″	761302
C-417-PZK	7/8″	761400
HPC-103-PZK	3/8″	761500
HPC-104-PZK	1/2″	761501
HPC-163-PZK-HH	3/8″	761600
HPC-164-PZK-HH	1/2″	761601
HPC-165-PZK-HH	5/8″	761602



Description	Connection Size (ODM x ODM)	Part Number
E2S123-PZK-HP	1/4″	4603-00
E3S123-PZK	1/4″	4604-00
E3S133-PZK	3/8″	4605-00
E5S133-PZK-HP	3/8″	4606-00
E6S133-PZK-HP	3/8″	4607-00
ME6S133-PZK-HP	3/8″	4610-00
E8S143-PZK-HP	1/2″	4608-00
ME8S143PZK-HP	1/2″	4611-00
ME10S153-PZK-HP	5/8″	4612-00
ME14S253-PZK-HP	5/8″	4613-00
E19S273-PZK-HP	7/8″	4609-00
ME19S273-PZK	7/8″	4614-00
ME19S273-PZK-HP	7/8″	4615-00
ME25S293-PZK	1-1/8″	4616-00
ME25S293-PZK-HP	1-1/8″	4617-00



Description	Connection Size (ODM x ODM)	Part Number
SA-13-PZK	3/8″	761700
SA-14-PZK	1/2″	761701
SA-15-PZK	5/8″	761702
SA-17-PZK	7/8″	761703



Description	Connection Size (ODM x ODM)	Part Number
EBVP-1023-PZK	1/4″	502159
EBVP-1033-PZK	3/8″	502160
EBVP-1043-PZK	1/2″	502161
EBVP-1053-PZK	5/8″	502162
EBVP-1063-PZK	3/4″	502163
EBVP-1073-PZK	7/8″	502164
EBVP-1093-PZK	1-1/8″	502165

SPORLAN NOMENCLATURE BREAKDOWN

For Sporlan and Parker information:

www.sporlan.com
www.parker.com

TEV Nomenclature

EG	V	E	-	1	-	C	3/8" ODF SOLDER	x	1/2" ODF SOLDER	x	1/4" ODF SOLDER	x	5'
Body Type	**Sporlan Code** – Refrigerant (Element Label Color Code) **F** = R-12 (Yellow) **E** = R-13 (Blue) **V** = R-22 (Green) **G** = R-23 (Blue) **M** = R-124 (Blue) **J** = R-134a (Blue) **X** = R-401A (Pink) **L** = R-402A (Sand) **S** = R-404A (Orange) **V** = R-407A (Green) **N** = R-407C (Lt. Brown) **N** = R-407F (Lt. Brown) **S** = R-408A (Purple) **F** = R-409A (Yellow) **Z** = R-410A (Rose) **V** = R-422D (Green) **D*** = R-448A (Blue) **D*** = R-449A (White) **R** = R-502 (Purple) **W** = R-503 (Blue) **P** = R-507A (Teal) **W** = R-508B (Blue) **J** = R-513A (White) **J** = R-1234yf (White)	"E" specifies external equalizer. Omission of letter "E" indicates valve with internal equalizer. e.g. EGV-1-C		Nominal Capacity in Tons		Thermostatic Charge	Inlet Connection Size and Style		Outlet Connection Size and Style		External Equalizer Connection Size and Style		Capillary Tubing Length Inches or Feet

* Sporlan no longer supports valves manufactured for R-500 that previously used the D refrigerant code.

Distributor Nomenclature

One	-	1126	-	16	-	1/4	-	15
Quantity		Type		Number of Circuits		Circuit Size		Nozzle Orifice Number

Solenoid Nomenclature

0	D	C	M	E	10	S	2	5	0	S	HP
[illegible]	[illegible]	Check Valve Feature	Manual Lift Stem	Design Series	Port Size in 1/32"	Connections Solder	Coil Size ①②	Connection Size in 1/8"	*Connections 0 - ODF x ODF 1 - ODF x ODM 2 - ODM x ODF 3 - ODM x ODM	Coil Connection S- Spade E - DIN 43650A	for R-410A only

① The MKC-1, OMKC-1, MKC-2 and OMKC-2 are fungus proof and meet MIL-I-631C.
② The standard MKC-1 and MKC-2 are class "F" rated.

* Standard connections are ODF inlet x ODF outlet on "E" Series valves. Minimum quantities may be required for other connections.

Catch-All Nomenclature

Signficance of the Type Number

The letters and numerals in the Catch-All type number each have a significance. The "C" indicates Catch-All. The **first two or three digits** indicate cubic inches of desiccant. The **last one or two digits** indicate fitting size in eights of an inch. For sealed models, a "-S" following the last digit indicates solder fittings and NO LETTER indicates a flare fitting. Replacable core models (C-420 and larger) only have solder connections and the "-S" is omitted. Examples are: C-083 is 8 cu. in. and 3/8" flare, C-309 is 30 cu. in. and 1-1/8" solder, C-19213-G is 192 cu. in. and 1-5/8" solder.

Other suffix letters indicate special qualities. For example:

- **"-T"** indicates a pressure tap consisting of a Schrader type access valve on the inlet end of the Catch-All
- **"-HH"** indicates a charcoal style core for wax removal and clean-up after a hermetic motor burnout
- **"-F"** indicates a female flare outlet fitting with a male flare inlet fitting
- **"-FM"** indicates a female flare inlet fitting with a male flare outlet fitting
- **"-CAP"** indicate a Catch-All particularly designd for installation on capillary type systems

Ball Valves Nomenclature

EBV	P	-	1	03	0	PZK
Valve Type	Access Fitting		**Series:** 1 = Full Port 2 = Reduced port	**Fitting Size:** (Eighths of an inch) ie: 03 = 3/8"	**Fitting Configuration:** 0 = ODF x ODF 3 = ODM x ODM	**ZoomLock Compatible**

SPORLAN NOMENCLATURE BREAKDOWN

Pressure Regulating Valves Nomenclature



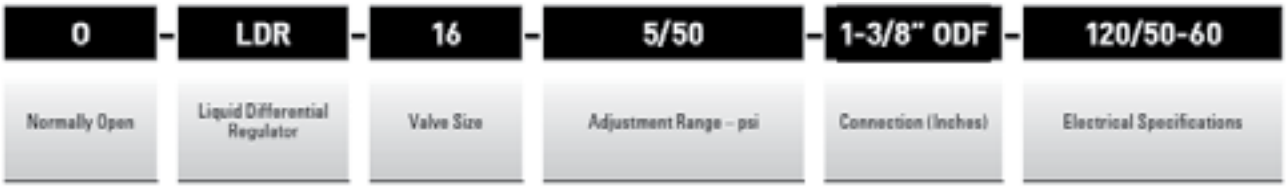



* Other pressure ranges are available.

Electronic Valves Nomenclature



Family Style could be SER or SEH





THERMOSTATIC EXPANSION VALVES

Preferred TEVS

VALVE TYPE	NOMINAL CAPACITY RANGE (Tons)				CONNEC-TION TYPES	VALVE DESCRIPTION AND APPLICATION
	R-22	R-134a	R-404A & R-507	R-410A		
RC 	1 thru 6	–	–	1 thru 6	Chatleff, SAE Flare, or ODF Solder	Small brass body, externally adjustable valve available for R-22 and R-410A air conditioning and heat pump applications. This valve features a balanced port construction and contains an internal check valve to eliminate the need for an external bypass check valve on heat pump applications. Suitable for replacing OEM type TEVs with or without internal check valve on these applications. Inlet strainer is not included.
ER/SR 	1 thru 12	–	–	1 thru 15	ODF Solder	Small brass body, externally adjustable valve available for R-22 and R-410A air conditioning and heat pump applications. This valve features a balanced port construction and is approved for bi-directional operation. Suitable for replacing OEM type TEVs without internal check valve on these applications. A 60 x 50 mesh inlet strainer is included with 3/8" inlet.
F 	1/5 thru 3	1/8 thru 2	1/8 thru 2	–	SAE Flare	Small brass bar body, externally adjustable valve for small capacity refrigeration systems. SAE flare inlet connection has a removable 100 mesh strainer. Typical applications: Refrigerated cases, coolers, freezers.
EF 	1/5 thru 3	1/8 thru 2	1/8 thru 2	–	ODF Solder	Same as the Type F valve except valve features ODF solder connections. The inlet connection has a 60 x 50 mesh insert type strainer. Typical applications: Refrigerated cases, coolers, freezers.
Q/BQ 	Q 1/3 thru 5 BQ 1/8 thru 5-1/2	Q 1/6 thru 2-1/2 BQ 1/8 thru 3	Q 1/6 thru 3 BQ 1/8 thru 3	Q – BQ 1/4 thru 6	SAE Flare	The brass body Type Q valve is externally adjustable with a removable cartridge or orifice. The valve body, cartridge and thermostatic element is supplied as independent components. This allows body, cartridge and element to be assembled and matched to specific system requirements. Inlet connection has a 100 mesh removable strainer screen. Typical applications: Refrigeration applications and external equalized versions may be used on air conditioning. Type BQ same as above, with balanced port construction.
EQ/EBQ 	EQ 1/3 thru 5 EBQ 1/8 thru 5-1/2	EQ 1/6 thru 2-1/2 EBQ 1/8 thru 3	EQ 1/6 thru 3 EBQ 1/8 thru 3	EQ – EBQ 1/4 thru 6	Extended ODF Solder	Type EQ same as the Type Q except it features extended ODF connections. A 100 mesh insert strainer is provided with the valve. Type EBQ same as Type EQ with balanced port construction and is approved for bi-directional applications.
SQ/SBQ 	SQ 1/3 thru 5 SBQ 1/8 thru 5-1/2	SQ 1/6 thru 2-1/2 SBQ 1/8 thru 3	SQ 1/6 thru 3 SBQ 1/8 thru 3	SQ – SBQ 1/4 thru 6	Extended ODF Solder	Type SQ same as the Type Q valve except it features ODF solder connections and a forged brass inlet fitting with a removable 100 mesh strainer screen which can be cleaned and/or replaced without removing the valve from the line. Type SBQ is the same as Type SQ with balanced port construction and is approved for bi-directional applications.

SPORLAN REPLACEMENT PARTS

Guidelines for Retrofits to R407A, R407F, R448A, or R449A

COMPONENT	FROM R404A			FROM R22		
	Existing is …	Check Sizing?	Recommendation	Existing is …	Check Sizing?	Recommendation
Distributor	Likely Okay	Required*	Replace only if sizing requires	Likely Okay	Required*	Replace only if sizing requires
TEV (Sizing)	Likely Oversized	Required	Replace TEV	Likely Okay	Required	Replace only if sizing requires
TEV (Thermostatic Element)	Not Compatible	N/A	Replace with R22 element**	Compatible	N/A	Don't replace
Liquid Line Solenoid Valve	Possibly Oversized	Required	Replace only if sizing requires	Likely Okay	Good Practice	Replace only if sizing requires
Externally Piloted EPR	Likely Okay	Good Practice	Replace only if sizing requires	Likely Okay	Good Practice	Replace only if sizing requires
Internally Piloted EPR	Likely Okay	Required	Replace only if sizing requires	Likely Okay	Required	Replace only if sizing requires
Electric EPR	Likely Okay	Good Practice	Replace only if sizing requires	Likely Okay	Good Practice	Replace only if sizing requires
Suction Solenoid Valve	Likely Okay	Good Practice	Replace only if sizing requires	Likely Okay	Good Practice	Replace only if sizing requires
Filter-Drier	Likely OK size, but contaminated	Good Practice	Change filter-drier	Likely OK size, but contaminated	Good Practice	Change filter-drier
Suction Filter	Likely OK size, but contaminated	Good Practice	Change suction filter	Likely OK size, but contaminated	Good Practice	Change suction filter
Refrigeration Oil	Compatible	N/A	Change to de-contaminate	Not Compatible	N/A	Change until <5% MO content
Elastomeric Seals	Leaks Possible	N/A	Best practice to change	Leaks Likely	N/A	Change seals

** In order to accurately check TEV sizing.*

*** Only if TEV sizing is OK, best practice is to replace the TEV.*

SPORLAN TEV FIELD CONVERSIONS

Field Conversion of the Thermostatic Expansion Valves with Replaceable Thermostatic Elements

We recognize the fact that occasionally a valve must be converted from one refrigerant to another to satisfy an emergency situation. We feel this practice should be the exception rather than the rule.

The information below provides the necessary data required for field conversion of thermostatic expansion valves from one refrigerant to another by changing power elements. It does not take into account the different springs that are necessary with different refrigerants. But in general, the superheat adjustment on the valve will allow compensation on an operating unit for different spring wire sizes. For further spring information contact SPORLAN.

VALVES WITH NOMINAL CAPACITIES ON THE SAME HORIZONTAL LINE HAVE THE SAME PORT DIAMETER AND PIN ANGLE.

VALVE TYPE	ELEMENT SIZE	NOMINAL VALVE CAPACITY			
		REFRIGERANT			
		134a, 401A, 409A	22, 422D, 407C	402A, 404A, 408A, 507	410A
(E)F (Internal Equalized)	43	-	1/5	-	Not Approved
		1/8	-	1/8	
		1/6	1/3	1/6	
		1/4	1/2	1/4	
		1/2	1	1/2	
		1	1-1/2	1	
		1-1/2	2-1/2	1-1/2	
(E)F (External Equalized)		-	1/5	-	Not Approved
		1/8	-	1/8	
		1/6	1/3	1/6	
		1/4	1/2	1/4	
		1/2	1	1/2	
		1	1-1/2	1	
		1-1/2	2	1-1/2	
		2	3	2	
		3	5	3	
BF(E), EBF(E), & SBF(E)		AAA	AAA	AAA	Not Approved
		AA	AA	AA	
		A	A	A	
		B	B	B	
		C	C	C	
(E)G (Internal Equalized)	53	-	1/5	-	Not Approved
		1/8	1/4	1/8	
		1/6	1/3	1/6	
		-	1/2	-	
		1/4	3/4	1/4	
		1/2	1	1/2	
		1	1-1/2	1	
		1-1/2	2-1/2	1-1/2	
(E)G (External Equalized)		-	1/5	-	Not Approved
		1/8	1/4	1/8	
		1/6	1/3	1/6	
		-	1/2	-	
		1/4	3/4	1/4	
		1/2	1	1/2	
		1	1-1/2	1	
		1-1/2	2	1-1/2	
		2	3	2	
		-	4	-	
R(E) & BBI(E) (OEM Only)	43 & 45 (R410A)	1/2	1	1/2	1
		1	1-1/2	1	1-1/2
		1-1/2	2	1-1/2	2
		2	3	2	3
		2-1/2	4	3	4
		3	5	3-1/2	5
		4	6	4	6
		5	8	6	8
		7	10	7	12-1/2
		9	12	9	15
RC(E) & CBBI(E) (OEM Only)		1/2	1	1/2	1
		1	1-1/2	1	1-1/2
		1-1/2	2	1-1/2	2
		2	3	2	3
		2-1/2	4	3	4
		3	5	3-1/2	5
		4	6	-	6
P,H (After Oct 1970)	33	1-1/2	2-1/2	1-1/2	Not Approved
		3	5-1/2	-	
		4	7	4	
		5	11	6-1/2	
		8	16	9	
		12	20	12	

SPORLAN TEV FIELD CONVERSIONS

Field Conversion of the Thermostatic Expansion Valves with Replaceable Thermostatic Elements (Con't)

VALVE TYPE	ELEMENT SIZE	NOMINAL VALVE CAPACITY			
		REFRIGERANT			
		134a, 401A, 409A	22, 422D, 407C	402A, 404A, 408A, 507	410A
C, S	83	1/8	1/4	1/8	Not Approved
		1/4	1/2	1/4	
		1/2	1	1/2	
		1	1-1/2	1	
		1-1/2	2	1-1/2	
		2	3	2	
		2-1/2	4	3	
		3	5	4	
C, S (External Equalized)		5	8	6	
S (External Equalized)		6	10	7	
		10	15	10	
EBS		5	8	6	
		7	11	7-1/2	
		9	15	10	
		12	20	13	
M	63	5	8	6	Not Approved
		7-1/2	12	9	
		11	18	13	
		13	21	15	
		15	26	20	
		20	34	25	
		25	42	30	
O	83 & 85 (R410A)	6	10	6	-
		-	-	-	20
		9	15	9	-
		-	-	-	25
		12	20	12	-
		16	30	21	35
	33	23	40	30	-
		32	55	35	-
		40	70	45	-
	85-3	-	-	-	50
		-	-	-	60
V	63	35	52	38	Not Approved
		45	70	50	
		55	100	70	
W	7	80	135	100	Not Approved
		110	180	130	

Some valves are obsolete, but listed here as a historical reference.

RECOMMENDED THERMOSTATIC CHARGES

SPORLAN SELECTIVE CHARGES ENGINEERED for PEAK PERFORMANCE for EACH SPECIFIC APPLICATION

APPLICATION	REFRIGERANT										ACTUAL THERMOSTAT-IC CHARGES
	12, 409A	22, 422D, 407A	410A	134a	401A	402A	404A, 408A	407C	502	507	
Air Conditioning	FCP60	–	–	JCP60	XCP60	–	–	–	–	–	JCP60
	–	VCP100	–	–	–	–	–	NCP100	–	–	VCP100
	–	–	ZCP180	–	–	–	–	–	–	–	ZCP180
	–	VGA	–	–	–	–	–	NGA	–	–	VGA
	–	–	–	–	–	–	SCP115	–	RCP115	–	SCP115
	–	–	ZGA	–	–	–	–	–	–	–	ZGA
Commercial Refrigeration 50°F to -10°F	FC	–	–	JC	XC	–	–	–	–	–	JC
	–	VC	–	–	–	–	–	NC	–	–	VC
	–	–	–	–	–	–	SC	–	RC	–	SC
	–	–	–	–	–	LC	–	–	–	PC	PC
Low Temperature Refrigeration 0°F to -40°F	FZ	–	–	–	–	–	–	–	–	–	JZ
	FZP	–	–	–	–	–	–	–	–	–	JZP
	–	VZ	–	–	–	–	–	–	–	–	VZ
	–	VZP40	–	–	–	–	–	–	–	–	VZP40
	–	–	–	–	–	LZ	SZ	–	RZ	PZ	SZ
	–	–	–	–	–	LZP	SZP	–	RZP	PZP	SZP
Extreme Low Temperature Refrigeration -40°F to -100°F	–	VX	–	–	–	–	–	–	–	–	VX
	–	–	–	–	–	LX	SX	–	RX	PX	SX

** Recommended Thermostatic Charge for R448A/R449A is the letter 'D'. However, if not available substitute the R22/R407A/F/C letter 'V' element*

APPLICATION FACTORS:

1. The Type ZP charges have essentially the same characteristics as the Type Z charge with one exception: they produce a pressure limit Maximum Operating Pressure (MOP). ZP charges are not intended as replacements for Z charges. Each should be selected for its own unique purpose.
2. All air conditioning and heat pump charges are intended for use with externally equalized valves.
3. Type L liquid charges are also available for most commonly used refrigerants in most element sizes.
4. The Type X charges are not to be used with "EBS" and "O" valves.
5. If in doubt as to which charge to use, review the section on thermostatic charges in Bulletin 10-9 or contact Sporlan Division of Parker, Washington, Missouri with complete system data.
6. For dual temperature applications, use the "C" charge.
7. The "C" charge may be used on applications down to -30°F on R-22, R-404A and R-507.

THERMOSTATIC EXPANSION VALVES

Recommended Thermostatic Charges

Refrigerant	Air Conditioning or Heat Pump	Commercial Refrigeration +50°F to -10°F	Low Temperature Refrigeration 0°F to -40°F	Extreme Low Temperature Refrigeration -40°F to -100°F
134a, 513A, 401A, 401B	JCP60	JC	-	-
407C	"NGA VCP100"	VC	"VZ VZP40"	VX
402A, 402B, 404A, 507	SCP115	SC/PC	"SZ SZP"	-
410A	"ZGA ZCP180"	-	-	-
448A, 449A	DC	"DZ DZP"	-	-

Alternative Refrigerant	"SVC Letter Code"
R-134a, R-401A, R-401B	J
"R-402A, R-402B, 404A, R-507"	S
R-407C	N
R-401A	Z

Selection Example:

Refrigerant R-448A

Summer Conditions

Design Condenser temperature (°F)	105
Design Evaporator temperature (°F)	25
Refrigerant Liquid Temperature (°F)	100
Design evaporator Capacity (tons)	1.5

Available Pressure Drop across TEV

Condensing Pressure (psig)	262
Evaporating Pressure (psig)	-51
High side pressure drop (psig)	-6
Distributor and tube loss (psig)	-30
	175

Pressure drop correction factor = 1.18
Liquid temperature correction factor = 1.0
ERDE-2-C Nominal Capacity = 2.15 tons
1.18 x 1.0 x 2.15 = 2.53 tons

Winter Conditions

Design Condenser temperature (°F)	70
Design Evaporator temperature (°F)	25
Refrigerant Liquid Temperature (°F)	60
Design evaporator Capacity (tons)	1.5

Condensing Pressure (psig)	154
Evaporating Pressure (psig)	-51
High side pressure drop (psig)	-6
Distributor and tube loss (psig)	-30
	67

Pressure drop correction factor = 0.77
Liquid temperature correction factor = 1.24
ERDE-1-1/2-C Nominal Capacity = 2.15 tons
0.77 x 1.24 x 2.15 = 2.05 tons

Refrigerant R-448A

Summer Conditions

Design Condenser temperature (°F)	105
Design Evaporator temperature (°F)	-10
Refrigerant Liquid Temperature (°F)	100
Design evaporator Capacity (tons)	1.5

Available Pressure Drop across TEV

Condensing Pressure (psig)	262
Evaporating Pressure (psig)	-16
High side pressure drop (psig)	-6
Distributor and tube loss (psig)	-30
	210

Pressure drop correction factor = 1.26
Liquid temperature correction factor = 1.0
ERDE-2-C Nominal Capacity = 2.3 tons
1.26 x 1.0 x 2.3 = 2.9 tons

Winter Conditions

Design Condenser temperature (°F)	70
Design Evaporator temperature (°F)	-10
Refrigerant Liquid Temperature (°F)	60
Design evaporator Capacity (tons)	1.5

Condensing Pressure (psig)	154
Evaporating Pressure (psig)	16
High side pressure drop (psig)	-6
Distributor and tube loss (psig)	-30
	134

Pressure drop correction factor = 1.0
Liquid temperature correction factor = 1.32
ERDE-2-C Nominal Capacity = 2.3 tons
1.0 x 1.24 x 2.3 = 2.85 tons

Liquid Correction Factor

°F	0	10	20	30	40	50	60	70	80	90	100	110	120	130	140
°C	-18	-12	-7	-1	4	10	16	21	27	32	38	43	49	54	60
R-448A	1.78	1.70	1.63	1.55	1.48	1.40	1.32	1.24	1.16	1.08	1.00	0.92	0.83	0.75	0.66
R-449A	1.78	1.71	1.63	1.56	1.48	1.40	1.32	1.25	1.17	1.08	1.00	0.92	0.83	0.75	0.66
R-450A	1.73	1.66	1.59	1.51	1.44	1.37	1.30	1.22	1.15	1.07	1.00	0.93	0.85	0.77	0.70
R-513A	1.80	1.72	1.64	1.56	1.48	1.41	1.33	1.25	1.16	1.08	1.00	0.92	0.83	0.75	0.66
R-32	1.58	1.53	1.47	1.41	1.36	1.30	1.24	1.19	1.13	1.06	1.00	0.94	0.87	0.80	0.73

EVAPORATOR TEMPERATURE °F	PRESSURE DROP ACROSS TEV (psi)											
	30	50	75	100	125	150	175	200	225	250	275	300
	CORRECTION FACTOR, CF PRESSURE DROP											
40°	0.55	0.71	0.87	1.00	1.12	1.22	1.32	1.41	1.50	1.58	1.66	1.73
20° & 0°	0.49	0.63	0.77	0.89	1.00	1.10	1.18	1.26	1.34	1.41	1.48	1.55
-10° & -20°	0.45	0.58	0.71	0.82	0.91	1.00	1.08	1.15	1.22	1.29	1.35	1.41
-40°	0.41	0.53	0.65	0.76	0.85	0.93	1.00	1.07	1.13	1.20	1.25	1.31

(F)	Pressure	
-25	7	Dew Point
-20	10	
-15	13	
-10	16	
-5	20	
0	24	
5	29	
10	34	
15	39	
20	45	
25	51	
30	57	
35	64	
40	72	
45	80	
50	108	Bubble Point
55	118	
60	129	
65	141	
70	154	
75	167	
80	180	
85	195	
90	210	
95	227	
100	244	
105	262	
110	280	

Temperature (F)	Dew Pressure (psia)	Bubble Pressure (psia)	Dew Pressure (psig)	Bubble Pressure (psig)
-25	21.683	28.237	7	13.5
-20	24.535	31.693	10	17.0
-15	27.671	35.467	13	20.8
-10	31.112	39.579	16	24.9
-5	34.875	44.048	20	29.4
0	38.982	48.893	24	34.2
5	43.453	54.135	29	39.4
10	48.309	59.795	34	45.1
15	53.571	65.893	39	51.2
20	59.262	72.451	45	57.8
25	65.404	79.489	51	64.8
30	72.021	87.031	57	72.3
35	79.136	95.098	64	80.4
40	86.775	103.713	72.1	89.0
45	94.96	112.899	80.3	98.2
50	103.719	122.678	89.0	108
55	113.078	133.074	98.4	118
60	123.063	144.112	108.4	129
65	133.702	155.814	119.0	141
70	145.024	168.205	130.3	154
75	157.058	181.309	142.4	167
80	169.833	195.153	155.1	180
85	183.382	209.76	168.7	195
90	197.736	225.156	183.0	210
95	212.93	241.369	198.2	227
100	228.999	258.423	214.3	244
105	245.979	276.345	231.3	262
110	263.91	295.164	249.2	280

THERMOSTATIC EXPANSION VALVES

R-22, R-407A, R407C

VALVE TYPES	NOMINAL CAPACITY	REFRIGERANT														
		22						422D①						407C		
		RECOMMENDED THERMOSTATIC CHARGE														
		VC, VCP100, VGA			VZ, VZP40			VC, VCP100, VGA			VZ, VZP40			NC, NCP100, NGA		
		EVAPORATOR TEMPERATURE °F														
		40°	20°	0°	-10°	-20°	-40°	40°	20°	0°	-10°	-20°	-40°	40°	20°	0°
BALANCED PORT THERMOSTATIC EXPANSION VALVES																
BF-EBF-SBF (BQ-EBQ-SBQ)	AAA	0.35	0.38	0.33	0.27	0.24	0.18	0.25	0.26	0.22	0.18	0.16	0.11	0.32	0.34	0.30
BF-EBF-SBF (BQ-EBQ-SBQ)	AA	0.75	0.82	0.71	0.68	0.61	0.45	0.54	0.57	0.48	0.45	0.40	0.28	0.69	0.74	0.64
BF-EBF-SBF (BQ-EBQ-SBQ)	A	1.60	1.74	1.52	1.22	1.09	0.81	1.14	1.21	1.02	0.81	0.71	0.51	1.47	1.58	1.36
BF-EBF-SBF (BQ-EBQ-SBQ)	B	2.80	3.05	2.67	2.25	2.01	1.50	2.00	2.12	1.79	1.49	1.31	0.94	2.57	2.76	2.37
BF-EBF-SBF (BQ-EBQ-SBQ)	C	5.20	5.67	4.96	4.04	3.62	2.70	3.71	3.93	3.33	2.67	2.35	1.69	4.78	5.13	4.41
EBS	8	8.51	8.81	7.30	6.15	5.15	3.79	6.06	6.10	4.90	4.06	3.34	2.37	7.81	7.96	6.48
EBS	11	11.5	11.9	9.86	8.32	6.96	5.13	8.20	8.25	6.63	5.50	4.52	3.21	10.6	10.8	8.77
EBS	15	15.5	16.3	12.2	11.1	8.88	6.85	11.0	11.3	8.19	7.33	5.77	4.28	14.2	14.7	10.8
EBS	20	22.3	22.8	16.9	15.4	12.4	8.66	15.9	15.8	11.4	10.2	8.02	5.42	20.5	20.6	15.0
O	15	15.0	15.5	13.0	9.20	8.15	6.14	10.7	10.8	8.75	6.08	5.29	3.84	13.8	14.1	11.6
O	20	22.2	23.0	19.3	16.3	12.0	9.71	15.8	15.9	13.0	10.8	7.81	6.07	20.4	20.8	17.1
O	30	30.5	31.6	26.5	19.4	17.1	14.4	21.7	21.9	17.8	12.8	11.1	8.97	28.0	28.6	23.6
O	40	40.3	43.5	32.0	29.5	26.1	21.8	28.7	30.1	21.5	19.5	17.0	13.6	37.0	39.3	28.5
O	55	55.0	59.3	43.7	39.4	29.9	24.3	39.2	41.1	29.4	26.0	19.4	15.2	50.6	53.7	38.9
O	70	73.0	78.8	58.0	51.5	34.0	26.4	52.0	54.6	39.0	34.0	22.1	16.5	67.1	71.3	51.6
V	52	52.0	56.1	54.0	52.2	37.0	29.5	37.1	38.9	36.3	34.5	24.0	18.4	47.8	50.8	48.0
V	70	73.0	78.8	75.8	71.6	50.7	40.4	52.0	54.6	50.9	47.3	32.9	25.3	67.1	71.3	67.4
V	100	100	108	104	92.2	65.3	52.1	71.3	74.8	69.8	60.9	42.4	32.6	91.9	97.6	92.3
W	135	143	154	148	132	93.5	74.5	102	107	99.7	87.3	60.7	46.6	131	140	132
W	180	180	–	–	–	–	–	128	–	–	–	–	–	165	–	–
VALVE TYPES	**CARTRIDGE NO.**	**REPLACEABLE CARTRIDGE THERMOSTATIC EXPANSION VALVES**														
Q-EQ-SQ	0	1/3	0.35	0.38	0.33	0.27	0.24	0.18	0.25	0.26	0.22	0.18	0.16	0.11	0.32	0.35	0.30
Q-EQ-SQ	1	3/4	0.75	0.82	0.72	0.68	0.61	0.45	0.54	0.57	0.48	0.45	0.40	0.28	0.69	0.74	0.64
Q-EQ-SQ	2	1	1.00	1.09	0.95	0.86	0.77	0.57	0.71	0.76	0.64	0.57	0.50	0.36	0.92	0.99	0.85
Q-EQ-SQ	3	1-1/2	1.50	1.64	1.43	1.10	0.99	0.73	1.07	1.13	0.96	0.73	0.64	0.46	1.38	1.48	1.27
Q-EQ-SQ	4	2-1/2	2.50	2.73	2.38	2.20	1.97	1.47	1.78	1.89	1.60	1.45	1.28	0.92	2.30	2.46	2.12
Q-EQ-SQ	5	3-1/2	3.50	3.82	3.34	3.00	2.69	2.00	2.50	2.64	2.24	1.98	1.74	1.25	3.22	3.45	2.97
Q-EQ-SQ	6	5	4.80	5.24	4.58	3.65	3.27	2.44	3.42	3.63	3.07	2.41	2.12	1.52	4.41	4.73	4.07
BQ-EBQ-SBQ	Balanced port replaceable cartridges, AAA, AA, A, B and C, have the same capacities as the matching nominal capacity of the standard balanced port valves above.															

REFRIGERANT	LIQUID TEMPERATURE ENTERING TEV °F														
	0°	10°	20°	30°	40°	50°	60°	70°	80°	90°	100°	110°	120°	130°	140°
	CORRECTION FACTOR, CF LIQUID TEMPERATURE														
22	1.56	1.51	1.45	1.40	1.34	1.29	1.23	1.17	1.12	1.06	1.00	0.94	0.88	0.82	0.76
422D	1.99	1.90	1.80	1.70	1.60	1.50	1.41	1.31	1.20	1.10	1.00	0.90	0.79	0.68	0.57
407C	1.69	1.62	1.55	1.49	1.42	1.35	1.28	1.21	1.14	1.07	1.00	0.93	0.85	0.77	0.69

These factors include corrections for liquid refrigerant density and net refrigerating effect and are based on an evaporator temperature of 0°F. However, they may be used for any evaporator temperature from -40°F to 40°F since the variation in the actual factors across this range is insignificant.

EVAPORATOR TEMPERATURE °F	PRESSURE DROP ACROSS TEV (psi)											
	30	50	75	100	125	150	175	200	225	250	275	300
	CORRECTION FACTOR, CF PRESSURE DROP											
40°	0.55	0.71	0.87	1.00	1.12	1.22	1.32	1.41	1.50	1.58	1.66	1.73
20° & 0°	0.49	0.63	0.77	0.89	1.00	1.10	1.18	1.26	1.34	1.41	1.48	1.55
-10° & -20°	0.45	0.58	0.71	0.82	0.91	1.00	1.08	1.15	1.22	1.29	1.35	1.41
-40°	0.41	0.53	0.65	0.76	0.85	0.93	1.00	1.07	1.13	1.20	1.25	1.31

TEV Capacity = TEV Rating x CF Liquid Temperature x CF Pressure Drop — Example: Actual capacity of a nominal 2 ton R-22 Type S valve at 20°F evaporator, 100 psi pressure drop across the TEV, and 90°F liquid temperature entering the TEV = 2.18 (from rating chart) x 1.06 (CF liquid temperature) x 0.89 (CF pressure drop) = 2.06 tons.

① R-422D can be used in a system with R-22 valves, but the TEV capacity will be reduced. Please verify valve capacity will handle system load.

VALVE TYPES	NOMINAL CAPACITY	REFRIGERANT								
		22			422D①			407C		
		RECOMMENDED THERMOSTATIC CHARGE								
		VCP100, VGA②								
		EVAPORATOR TEMPERATURE °F								
		40°	20°	0°	40°	20°	0°	40°	20°	0°
ER, RC	1	1.0	1.1	1.0	0.71	0.76	0.66	0.9	1.0	0.9
ER, RC	1-1/2	1.8	1.9	1.7	1.25	1.32	1.15	1.6	1.7	1.5
ER, RC	2	2.3	2.5	2.2	1.64	1.74	1.51	2.1	2.3	2.0
ER, RC	3	3.2	3.5	3.1	2.28	2.42	2.10	2.9	3.2	2.8
ER, RC	4	4.2	4.6	4.1	2.99	3.17	2.75	3.9	4.1	3.6
ER, RC	5	5.0	5.5	4.9	3.56	3.78	3.27	4.6	4.9	4.3
ER, RC	6	6.0	6.5	5.3	4.28	4.53	3.54	5.5	5.9	4.7
ER	8	8.0	8.7	7.8	5.70	6.04	5.24	7.4	7.9	6.9
ER	10	10.4	11.4	10.2	7.44	7.88	6.83	9.6	10.3	9.0
ER	12	12.1	13.2	11.8	8.62	9.14	7.92	11.1	11.9	10.5

① R-422D can be used in a system with R-22 valves, but the TEV capacity will be reduced. Please verify valve capacity will handle system load.
② The RC valve for R-22 applications is only available with a VGA element.

THERMOSTATIC EXPANSION VALVES

R-404A, R408A

VALVE TYPES		NOMINAL CAPACITY	REFRIGERANT											
			404A						408A					
			RECOMMENDED THERMOSTATIC CHARGE											
			SC, SCP115			SZ, SZP			SC, SCP115			SZ, SZP		
			EVAPORATOR TEMPERATURE °F											
			40°	20°	0°	-10°	-20°	-40°	40°	20°	0°	-10°	-20°	-40°
BALANCED PORT THERMOSTATIC EXPANSION VALVES														
BF-EBF-SBF (BQ-EBQ-SBQ)		AAA	0.23	0.24	0.23	0.24	0.21	0.17	0.31	0.33	0.32	0.34	0.30	0.25
BF-EBF-SBF (BQ-EBQ-SBQ)		AA	0.46	0.49	0.46	0.45	0.39	0.32	0.62	0.66	0.64	0.63	0.55	0.47
BF-EBF-SBF (BQ-EBQ-SBQ)		A	1.02	1.10	1.04	1.10	0.94	0.79	1.37	1.50	1.44	1.54	1.34	1.14
BF-EBF-SBF (BQ-EBQ-SBQ)		B	1.89	1.98	1.66	1.60	1.37	1.14	2.53	2.70	2.30	2.24	1.95	1.66
BF-EBF-SBF (BQ-EBQ-SBQ)		C	2.86	3.00	2.50	2.45	2.10	1.75	3.83	4.08	3.48	3.43	2.98	2.54
EBS		6	5.71	5.63	4.61	4.15	3.28	2.97	7.67	7.66	6.40	5.82	4.66	4.32
EBS		7-1/2	7.75	7.64	6.26	5.28	4.18	3.78	10.4	10.4	8.68	7.41	5.93	5.49
EBS		10	9.54	9.63	7.25	6.72	5.56	4.64	12.8	13.2	10.0	9.42	7.88	6.74
EBS		13	13.6	14.0	10.2	9.54	8.00	6.15	18.3	19.0	14.2	13.4	11.4	8.94
O		9	9.69	9.24	7.24	6.11	5.31	4.43	13.0	12.6	10.1	8.57	7.53	6.44
O		12	13.3	12.6	9.91	9.74	8.46	7.06	17.8	17.2	13.8	13.6	12.0	10.3
O		21	21.4	20.4	14.3	11.7	10.1	8.46	28.8	27.8	19.8	16.4	14.4	12.3
O		30	30.8	32.3	23.0	17.5	15.2	12.7	41.4	44.0	32.0	24.5	21.5	18.4
O		35	35.7	37.4	26.7	19.0	16.5	13.8	47.9	51.0	37.0	26.6	23.4	20.0
O		45	45.9	48.1	34.3	21.9	19.0	15.9	61.6	65.6	47.6	30.7	26.9	23.1
V		38	38.7	39.4	33.6	33.2	30.5	24.1	52.0	53.7	46.6	46.6	43.2	35.1
V		50	52.0	52.9	45.1	47.4	43.5	34.4	69.8	72.1	62.6	66.5	61.7	50.0
V		70	71.4	72.6	62.7	66.4	60.9	48.1	95.8	99.0	87.0	93.1	86.4	70.0
VALVE TYPES	CARTRIDGE NO.	REPLACEABLE CARTRIDGE THERMOSTATIC EXPANSION VALVES												
Q-EQ-SQ	0	1/6	0.20	0.22	0.20	0.20	0.17	0.14	0.27	0.30	0.28	0.28	0.24	0.21
Q-EQ-SQ	1	1/4	0.46	0.49	0.46	0.45	0.39	0.32	0.62	0.66	0.64	0.63	0.55	0.47
Q-EQ-SQ	2	1/2	0.66	0.72	0.67	0.59	0.51	0.42	0.89	0.98	0.94	0.83	0.72	0.61
Q-EQ-SQ	3	1	1.02	1.07	0.89	0.85	0.73	0.61	1.37	1.46	1.24	1.19	1.03	0.88
Q-EQ-SQ	4	1-1/2	1.63	1.71	1.44	1.47	1.26	1.05	2.19	2.33	1.99	2.06	1.79	1.53
Q-EQ-SQ	5	2	2.14	2.25	1.88	1.96	1.68	1.40	2.88	3.06	2.61	2.74	2.38	2.04
Q-EQ-SQ	6	3	2.86	3.00	2.51	2.45	2.11	1.75	3.83	4.08	3.48	3.43	2.98	2.54
BQ-EBQ-SBQ	Balanced port replaceable cartridges, AAA, AA, A, B and C, have the same capacities as the matching nominal capacity of the standard balanced port valves above.													

REFRIGERANT	LIQUID TEMPERATURE ENTERING TEV °F														
	0°	10°	20°	30°	40°	50°	60°	70°	80°	90°	100°	110°	120°	130°	140°
	CORRECTION FACTOR, CF LIQUID TEMPERATURE														
404A	2.04	1.94	1.84	1.74	1.64	1.54	1.43	1.33	1.22	1.11	1.00	0.89	0.77	0.65	0.53
408A	1.66	1.60	1.54	1.47	1.40	1.34	1.27	1.21	1.14	1.07	1.00	0.93	0.86	0.79	0.71

These factors include corrections for liquid refrigerant density and net refrigerating effect and are based on an evaporator temperature of 0°F. However, they may be used for any evaporator temperature from -40°F to 40°F since the variation in the actual factors across this range is insignificant.

EVAPORATOR TEMPERATURE °F	PRESSURE DROP ACROSS TEV (psi)										
	30	50	75	100	125	150	175	200	225	250	275
	CORRECTION FACTOR, CF PRESSURE DROP										
40°	0.55	0.71	0.87	1.00	1.12	1.22	1.32	1.41	1.50	1.58	1.66
20° & 0°	0.49	0.63	0.77	0.89	1.00	1.10	1.18	1.26	1.34	1.41	1.48
-10° & -20°	0.45	0.58	0.71	0.82	0.91	1.00	1.08	1.15	1.22	1.29	1.35
-40°	0.41	0.53	0.65	0.76	0.85	0.93	1.00	1.07	1.13	1.20	1.25

TEV Capacity = TEV Rating x CF Liquid Temperature x CF Pressure Drop — Example: Actual capacity of a nominal 1-1/2 ton R-404A Type EG valve at -20°F evaporator, 125 psi pressure drop across the TEV, and 60°F liquid temperature entering the TEV = 1.26 (from rating chart) x 1.43 (CF liquid temperature) x 0.91 (CF pressure drop) = 1.64 tons.

THERMOSTATIC EXPANSION VALVES

R-402A, R507

VALVE TYPES	NOMINAL CAPACITY	REFRIGERANT											
		402A						507					
		RECOMMENDED THERMOSTATIC CHARGE											
		LC			LZ, LZP			PC			PZ, PZP		
		EVAPORATOR TEMPERATURE °F											
		40°	20°	0°	-10°	-20°	-40°	40°	20°	0°	-10°	-20°	-40°
BALANCED PORT THERMOSTATIC EXPANSION VALVES													
BF-EBF-SBF (BQ-EBQ-SBQ)	AAA	0.23	0.24	0.23	0.24	0.21	0.18	0.23	0.24	0.22	0.24	0.21	0.17
BF-EBF-SBF (BQ-EBQ-SBQ)	AA	0.46	0.49	0.46	0.45	0.39	0.33	0.45	0.48	0.45	0.44	0.38	0.32
BF-EBF-SBF (BQ-EBQ-SBQ)	A	1.02	1.10	1.04	1.11	0.95	0.80	1.00	1.08	1.01	1.08	0.93	0.77
BF-EBF-SBF (BQ-EBQ-SBQ)	B	1.88	1.98	1.66	1.61	1.39	1.16	1.85	1.94	1.62	1.57	1.35	1.12
BF-EBF-SBF (BQ-EBQ-SBQ)	C	2.85	3.00	2.52	2.47	2.12	1.78	2.79	2.93	2.45	2.40	2.06	1.72
EBS	6	5.69	5.63	4.63	4.18	3.32	3.01	5.59	5.50	4.52	4.06	3.22	2.92
EBS	7-1/2	7.73	7.64	6.29	5.32	4.23	3.84	7.59	7.47	6.13	5.18	4.10	3.72
EBS	10	9.51	9.64	7.28	6.77	5.62	4.71	9.35	9.43	7.10	6.59	5.46	4.57
EBS	13	13.6	14.0	10.2	9.61	8.08	6.25	13.4	13.7	9.99	9.36	7.85	6.06
O	9	9.66	9.25	7.28	6.16	5.37	4.50	9.48	9.04	7.09	5.99	5.21	4.36
O	12	13.2	12.7	9.96	9.81	8.55	7.17	13.0	12.4	9.71	9.54	8.30	6.95
O	21	21.3	20.4	14.4	11.8	10.2	8.60	21.0	20.0	14.0	11.4	9.95	8.32
O	30	30.7	32.3	23.1	17.6	15.3	12.9	30.1	31.6	22.5	17.1	14.9	12.5
O	35	35.6	37.5	26.8	19.1	16.7	14.0	34.9	36.6	26.1	18.6	16.2	13.5
O	45	45.7	48.2	34.5	22.0	19.2	16.1	44.9	47.1	33.6	21.4	18.6	15.6
V	38	38.6	39.5	33.8	33.5	30.8	24.5	37.9	38.6	32.9	32.6	29.9	23.7
V	50	51.8	52.9	45.3	47.8	44.0	34.9	50.9	51.8	44.2	46.5	42.7	33.8
V	70	71.2	72.7	63.0	66.9	61.5	48.9	69.9	71.0	61.4	65.1	59.8	47.4
VALVE TYPES	**CARTRIDGE NO.**	**REPLACEABLE CARTRIDGE THERMOSTATIC EXPANSION VALVES**											
Q-EQ-SQ	0	1/6	0.20	0.22	0.20	0.20	0.17	0.15	0.20	0.21	0.20	0.20	0.17	0.14
Q-EQ-SQ	1	1/4	0.46	0.49	0.46	0.45	0.39	0.33	0.45	0.48	0.45	0.44	0.38	0.32
Q-EQ-SQ	2	1/2	0.66	0.72	0.67	0.59	0.51	0.43	0.65	0.70	0.66	0.58	0.50	0.42
Q-EQ-SQ	3	1	1.02	1.07	0.89	0.86	0.74	0.62	1.00	1.05	0.88	0.83	0.72	0.60
Q-EQ-SQ	4	1-1/2	1.63	1.71	1.44	1.48	1.27	1.07	1.60	1.67	1.41	1.44	1.24	1.03
Q-EQ-SQ	5	2	2.14	2.25	1.88	1.97	1.70	1.43	2.10	2.20	1.84	1.92	1.65	1.38
Q-EQ-SQ	6	3	2.86	3.00	2.51	2.47	2.13	1.77	2.79	2.93	2.46	2.40	2.07	1.72
BQ-EBQ-SBQ	Balanced port replaceable cartridges, AAA, AA, A, B and C, have the same capacities as the matching nominal capacity of the standard balanced port valves above.												

REFRIGERANT	LIQUID TEMPERATURE ENTERING TEV °F														
	0°	10°	20°	30°	40°	50°	60°	70°	80°	90°	100°	110°	120°	130°	140°
	CORRECTION FACTOR, CF LIQUID TEMPERATURE														
402A	2.01	1.91	1.82	1.72	1.62	1.52	1.42	1.32	1.22	1.11	1.00	0.89	0.77	0.65	0.53
507	1.99	1.89	1.79	1.69	1.59	1.50	1.40	1.30	1.20	1.10	1.00	0.89	0.78	0.66	0.51

These factors include corrections for liquid refrigerant density and net refrigerating effect and are based on an evaporator temperature of 0°F. However, they may be used for any evaporator temperature from -40°F to 40°F since the variation in the actual factors across this range is insignificant.

EVAPORATOR TEMPERATURE °F	PRESSURE DROP ACROSS TEV (psi)										
	30	50	75	100	125	150	175	200	225	250	275
	CORRECTION FACTOR, CF PRESSURE DROP										
40°	0.55	0.71	0.87	1.00	1.12	1.22	1.32	1.41	1.50	1.58	1.66
20° & 0°	0.49	0.63	0.77	0.89	1.00	1.10	1.18	1.26	1.34	1.41	1.48
-10° & -20°	0.45	0.58	0.71	0.82	0.91	1.00	1.08	1.15	1.22	1.29	1.35
-40°	0.41	0.53	0.65	0.76	0.85	0.93	1.00	1.07	1.13	1.20	1.25

TEV Capacity = TEV Rating x CF Liquid Temperature x CF Pressure Drop — Example: Actual capacity of a nominal 1-1/2 ton R-404A Type EG valve at -20°F evaporator, 125 psi pressure drop across the TEV, and 60°F liquid temperature entering the TEV = 1.26 (from rating chart) x 1.43 (CF liquid temperature) x 0.91 (CF pressure drop) = 1.64 tons.

THERMOSTATIC EXPANSION VALVES

R-134A, R-401A, R409A

VALVE TYPES	NOMINAL CAPACITY	REFRIGERANT								
		134a			401A			409A		
		RECOMMENDED THERMOSTATIC CHARGE								
		JC, JCP60			XC, XCP60			FC, FCP60		
		EVAPORATOR TEMPERATURE °F								
		40°	20°	0°	40°	20°	0°	40°	20°	0°
BALANCED PORT THERMOSTATIC EXPANSION VALVES										
BF-EBF-SBF (BQ-EBQ-SBQ)	AAA	0.25	0.28	0.26	0.27	0.30	0.29	0.25	0.28	0.27
BF-EBF-SBF (BQ-EBQ-SBQ)	AA	0.54	0.54	0.50	0.58	0.58	0.54	0.55	0.54	0.50
BF-EBF-SBF (BQ-EBQ-SBQ)	A	1.21	1.20	1.10	1.29	1.29	1.20	1.21	1.21	1.12
BF-EBF-SBF (BQ-EBQ-SBQ)	B	2.05	2.03	1.87	2.20	2.20	2.04	2.06	2.05	1.90
BF-EBF-SBF (BQ-EBQ-SBQ)	C	3.62	3.59	3.30	3.88	3.88	3.60	3.63	3.62	3.35
EBS	5	6.12	5.60	4.82	6.57	6.06	5.26	6.15	5.66	4.89
EBS	7	8.44	7.72	6.64	9.06	8.36	7.25	8.47	7.80	6.74
EBS	9	11.2	9.72	7.80	12.0	10.5	8.52	11.2	9.81	7.92
EBS	12	16.0	14.0	10.9	17.2	15.1	11.9	16.1	14.1	11.1
O	9	10.8	10.8	9.33	11.6	11.7	10.2	10.9	10.9	9.48
O	12	14.1	14.0	12.1	15.1	15.1	13.2	14.2	14.1	12.3
O	16	18.7	18.5	16.1	20.1	20.1	17.6	18.8	18.7	16.3
O	23	27.7	30.0	24.7	29.8	32.4	27.0	27.8	30.2	25.1
O	32	38.6	41.7	34.4	41.4	45.1	37.6	38.7	42.1	34.9
O	40	48.2	52.1	43.0	51.8	56.4	47.0	48.4	52.6	43.7
V	35	42.2	41.9	33.2	45.3	45.3	36.3	42.4	42.3	33.7
V	45	54.2	53.8	42.7	58.2	58.3	46.6	54.5	54.3	43.3
V	55	66.3	65.8	52.2	71.2	71.2	57.0	66.6	66.4	53.0
W	80	102	102	75.3	110	110	82.2	103	103	76.4
W	110	137	—	—	148	—	—	138	—	—

VALVE TYPES	CARTRIDGE NO.	REPLACEABLE CARTRIDGE THERMOSTATIC EXPANSION VALVES								
Q-EQ-SQ	0	1/6	0.24	0.24	0.22	0.26	0.26	0.24	0.24	0.24	0.22
Q-EQ-SQ	1	1/4	0.54	0.54	0.50	0.58	0.58	0.54	0.55	0.54	0.50
Q-EQ-SQ	2	1/2	0.78	0.78	0.72	0.84	0.84	0.78	0.79	0.79	0.73
Q-EQ-SQ	3	1	1.21	1.20	1.10	1.29	1.29	1.20	1.21	1.21	1.12
Q-EQ-SQ	4	1-1/2	1.69	1.67	1.54	1.81	1.81	1.68	1.69	1.69	1.56
Q-EQ-SQ	5	2	2.41	2.39	2.20	2.59	2.59	2.40	2.42	2.42	2.23
Q-EQ-SQ	6	2-1/2	3.25	3.23	2.97	3.49	3.50	3.24	3.27	3.26	3.02
BQ-EBQ-SBQ	Balanced port replaceable cartridges, AAA, AA, A, B and C, have the same capacities as the matching nominal capacity of the standard balanced port valves above.									

REFRIGERANT	LIQUID TEMPERATURE ENTERING TEV °F														
	0°	10°	20°	30°	40°	50°	60°	70°	80°	90°	100°	110°	120°	130°	140°
	CORRECTION FACTOR, CF LIQUID TEMPERATURE														
134a	1.70	1.63	1.56	1.49	1.42	1.36	1.29	1.21	1.14	1.07	1.00	0.93	0.85	0.78	0.71
401A	1.60	1.54	1.48	1.43	1.36	1.31	1.25	1.19	1.13	1.06	1.00	0.94	0.87	0.80	0.74
409A	1.55	1.50	1.45	1.39	1.34	1.28	1.23	1.17	1.12	1.06	1.00	0.94	0.88	0.82	0.76

These factors include corrections for liquid refrigerant density and net refrigerating effect and are based on an evaporator temperature of 0°F. However, they may be used for any evaporator temperature from 0°F to 40°F since the variation in the actual factors across this range is insignificant.

EVAPORATOR TEMPERATURE °F	PRESSURE DROP ACROSS TEV (psi)							
	20	40	60	80	100	120	140	160
	CORRECTION FACTOR, CF PRESSURE DROP							
40°	0.58	0.82	1.00	1.15	1.29	1.41	1.53	1.63
20° & 0°	0.50	0.71	0.87	1.00	1.12	1.22	1.32	1.41

TEV Capacity = TEV Rating x CF Liquid Temperature x CF Pressure Drop — Example: Actual capacity of a nominal 1-1/2 ton R-134a Type EG valve at 20°F evaporator, 100 psi pressure drop across the TEV, and 60°F liquid temperature entering the TEV = 1.91 (from rating chart) x 1.29 (CF liquid temperature) x 1.12 (CF pressure drop) = 2.76 tons.

THERMOSTATIC EXPANSION VALVES

R-410A

VALVE TYPES	NOMINAL CAPACITY	REFRIGERANT 410A RECOMMENDED THERMOSTATIC CHARGE ZCP180, ZGA① EVAPORATOR TEMPERATURE °F		
		40°	20°	0°
ER, RC	1	1.2	1.3	1.2
ER, RC	1-1/2	2.1	2.3	2.0
ER, RC	2	2.7	3.0	2.7
ER, RC	3	3.8	4.1	3.7
ER, RC	4	5.0	5.4	4.9
ER, RC	5	5.9	6.5	5.8
ER, RC	6	7.1	7.8	6.3
ER	8	9.5	10.4	9.3
ER	12-1/2	12.3	13.5	12.1
ER	15	14.3	15.7	14.0

VALVE TYPES	NOMINAL CAPACITY	REFRIGERANT 410A RECOMMENDED THERMOSTATIC CHARGE ZCP180, ZGA EVAPORATOR TEMPERATURE °F		
		40°	20°	0°
OZE-20	20	19.7	21.6	20.4
OZE-25	25	23.7	25.9	24.5
OZE-35	35	32.6	35.6	33.6
OZE-50	50	49.3	54.0	51.0
OZE-60	60	59.2	64.8	61.2

VALVE TYPES	CARTRIDGE TYPE				
BQ, EBQ, SBQ	AAA	1/3	0.4	0.5	0.4
BQ, EBQ, SBQ	AA	3/4	0.9	1.0	0.9
BQ, EBQ, SBQ	A	1-3/4	1.9	2.1	1.8
BQ, EBQ, SBQ	B	3-1/2	3.4	3.7	3.2
BQ, EBQ, SBQ	C	6	6.2	6.8	5.9

REFRIGERANT	LIQUID TEMPERATURE ENTERING TEV °F										
	40	50	60	70	80	90	100	110	120	130	140
	CORRECTION FACTOR, CF LIQUID TEMPERATURE										
410A	1.39	1.31	1.23	1.17	1.12	1.06	1.00	0.94	0.88	0.82	0.76

EVAPORATOR TEMPERATURE °F	PRESSURE DROP ACROSS TEV (psi)							
	80	120	160	200	240	280	320	360
	CORRECTION FACTOR, CF PRESSURE DROP							
40°	0.71	0.87	1.00	1.12	1.22	1.32	1.41	1.50
20° & 0°	0.63	0.77	0.89	1.00	1.10	1.18	1.26	1.34

① The RC valve for R-410A applications is only available with a ZGA element.

PRODUCT BREAKDOWN

Type RC - For refrigerants 22, 410A, Chatleff, SAE Flare & ODF Solder Connections

Sporlan Type RC valve is a small brass body, externally adjustable valve with balanced portconstruction. The RC valves are available for replacement of types CBI and CBBI valves. These valves contain internal check valves to allow reverse flow on heat pump applications. This eliminates the need for an external check valve piped around the TEV for reverse flow. The RC valve can be used on heat pump and air conditioning (cooling only) applications. This allows you to reduce inventory by using the same valve to replace the I, BI and BBI valves. The RC valvescan even be used to replace the RI valve (non-RPB versions only).
Outlet Connections: 1/2" SAE, 1/2" ODF, 5/8" ODF Mating Distributors (See Bulletin 20-10): D260, D262, 1603, 1605, 1606, 1608, 1620, 1622, 1650(R), 1651(R)

Specifications – Element Size No. 43 (R-22) And No. 45 (R-410A), Knife Edge Joint

REFRIGERANT (Sporlan Code)	VALVE TYPE	EXTERNAL EQUALIZER ②, ③	NOMINAL CAPACITY Tons of Refrigeration	THERMOSTATIC ELEMENT SIZE NO.	THERMOSTATIC CHARGES AVAILABLE	STANDARD TUBING LENGTH Inches	CONNECTIONS - Inches ① SAE Flare/ ④ ODF Solder Blue figures are standard and will be furnished unless otherwise specified.		NET WEIGHT - lbs.	SHIPPING WEIGHT - lbs.
							INLET	OUTLET		
22 (V) 407C (N) 407A (V) 422D (V)	RCVE-1-GA	1/4 SAE 1/4 ODF	1	43	VGA	30	3/8 SAE 3/8 ODF	1/2 SAE 1/2 ODF	1-1/4	1-1/2
	RCVE-1-1/2-GA		1-1/2							
	RCVE-2-GA		2							
	RCVE-3-GA		3							
	RCVE-4-GA		4				1/2 ODF 1/2 SAE 1/2 ODF	1/2 ODF 1/2 SAE 5/8 ODF		
	RCVE-5-GA		5							
	RCVE-6-GA		6							
410A (Z)	RCZE-1-GA	1/4 ODF	1	45	ZGA		3/8 ODF	1/2 ODF		
	RCZE-1-1/2-GA		1-1/2							
	RCZE-2-GA		2							
	RCZE-3-GA		3							
	RCZE-4-GA		4				1/2 ODF	1/2 ODF		
	RCZE-5-GA		5				1/2 ODF	5/8 ODF		
	RCZE-6-GA		6							

① Valves are also available as special order with Chatleff connections.
② Valves with SAE inlet and outlet fittings are available only with the 1/4" SAE flare external equalizer; valves with ODF fittings are available only with the 1/4" ODF external equalizer.
③ Valves with Chatleff fittings are available only with the 1/8" OD X 24" long tube with flare and nut external equalizer.
④ ODF Solder on Type RC valves indicates a female connection on the valve of proper diameter to receive copper tubing of corresponding OD size. Thus 1/2" ODF will receive 1/2" OD tubing.

SPORLAN TEV CAPACITY DATA

R VALVE CAPACITY DATA

Valve Types	Nominal Capacity	Refrigerant								
		134a			401A			409A		
		Recommended Thermostatic Charge								
		JC, JCP60			XC, XCP60			FC, FCP60		
		Evap Temp								
		40	20	0	40	20	0	40	20	0
ER-SR	1/6	0.31	0.35	0.30	0.33	0.36	0.31	0.31	0.36	0.31
R-ER-SR	1/4	0.44	0.49	0.43	0.46	0.51	0.45	0.44	0.50	0.44
R-ER-SR	1/2	0.72	0.80	0.70	0.75	0.84	0.74	0.72	0.82	0.73
R-ER-SR	1	1.27	1.40	1.23	1.32	1.47	1.30	1.27	1.44	1.27
R-ER-SR	1 1/2	1.67	1.84	1.61	1.73	1.93	1.71	1.67	1.89	1.67
R-ER-SR	2	2.32	2.56	2.24	2.41	2.68	2.37	2.32	2.63	2.32
R-ER-SR	3	3.62	4.00	3.50	3.77	4.19	3.71	3.62	4.10	3.63
ER	4	4.35	4.80	3.79	4.52	5.03	4.01	4.35	4.92	3.93
ER	5	5.79	6.39	5.60	6.02	6.71	5.93	5.80	6.56	5.80
ER	9	8.76	9.67	8.47	9.11	10.1	8.97	8.76	9.93	8.78

Valve Types	Nominal Capacity	Refrigerant													
		22						422D						407C	
		Recommended Thermostatic Charge													
		VC, VCP,100, VGA			VZ, VZP40			VC, VCP00, VGA			VZ, VZP40			NC, NCP100, NGA	
		Evap Temp													
		40	20	0	-10	-20	-40	40	20	0	-10	-20	-40	40	20	0
R-ER-SR	1/3	0.43	0.47	0.41	0.34	0.30	0.22	0.31	0.33	0.28				0.39	0.42	0.37
R-ER-SR	1/2	0.61	0.67	0.60	0.55	0.49	0.37	0.44	0.46	0.40				0.56	0.60	0.53
R-ER-SR	1	1.00	1.09	0.97	0.86	0.77	0.57	0.71	0.76	0.66				0.91	0.98	0.86
R-ER	1 1/2	1.75	1.91	1.71	1.22	1.09	0.81	1.25	1.32	1.15				1.59	1.71	1.51
R-ER-SR	2	2.30	2.51	2.24	1.60	1.43	1.07	1.64	1.74	1.51				2.09	2.25	1.99
R-ER-SR	3	3.21	3.49	3.12	2.30	2.06	1.53	2.28	2.42	2.10				2.91	3.13	2.77
R-ER	4	4.21	4.58	4.09	3.00	2.69	2.00	2.99	3.17	2.75				3.81	4.11	3.63
R-ER-SR	5	5.01	5.45	4.87	3.43	3.07	2.29	3.56	3.78	3.27				4.54	4.89	4.32
R-ER	6	6.01	6.54	5.28	3.80	3.18	2.34	4.28	4.53	3.54				5.45	5.87	4.68
ER	8	8.01	8.73	7.80	4.40	3.68	2.71	5.70	6.04	5.24				7.26	7.83	6.92
ER	12 1/2	10.4	11.4	10.2				7.44	7.88	6.83				9.47	10.2	9.02
ER	12	12.1	13.2	11.8				8.62	9.14	7.92				11.0	11.8	10.5

Valve Types	Nominal Capacity	Refrigerant		
		410A		
		Recommended		
		ZCP200, ZGA		
		Evap Temp		
		40	20	0
ER	1/3	0.51	0.56	0.49
ER	1/2	0.73	0.79	0.71
ER	1	1.19	1.30	1.16
ER	1 1/2	2.08	2.27	2.03
ER	2	2.73	2.99	2.67
ER	3	3.80	4.16	3.72
ER	4	4.99	5.46	4.88
ER	5	5.94	6.50	5.81
ER	6	7.13	7.79	6.29
ER	8	9.50	10.4	9.29
ER	10	12.4	13.5	12.1
ER	15	14.4	15.7	14.1

Valve Types	Nomincal Capacity	404A					
		Recommended Thermostatic Charge					
		SC,SCP115			SZ,SZP		
		Evap Temp					
		40	20	10	-10	-20	-40
ER-SR	1/6	0.224	0.238	0.225	0.239	0.205	0.172
R-ER-SR	1/4	0.385	0.409	0.386	0.386	0.336	0.254
R-ER-SR	1/2	0.6	0.63	0.6	0.6	0.53	0.41
R-ER-SR	1	1.13	1.2	1.13	1.08	0.94	0.8
R-ER-SR	1 1/2	1.49	1.58	1.49	1.42	1.24	1.06
R-ER-SR	2	2.07	2.2	2.07	1.98	1.72	1.47
R-ER-SR	3	2.71	2.88	2.72	2.6	2.26	1.93
R-ER-SR	3 1/2	3.23	3.43	3.24	3.09	2.69	2.3
ER	4	3.88	4.12	3.88	3.71	3.23	2.76
ER	6	5.17	5.49	5.18	4.95	4.3	3.68
ER	ΔP (PSI)	100	125	125	150	150	175

DIRECT REPLACEMENT FROM OLD TO NEW TEV:

FROM	REPLACE WITH	OPTION 2
E, G	BQ OR R	Q
EF, EG	EBQ, SBQ OR ER, SR	EQ OR SQ
BF	R OR BQ	
SBF, EBF	SBQ, EBQ OR ER, SR	
S	ER, SR OR EBQ, SBQ	

SPORLAN TEV CAPACITY DATA

448A/449A TEV CAPACITY INFORMATION

***N Charge or V Charge - Both will work**

VALVE TYPES	NOMINAL CAPACITY	REFRIGERANT											
		R448A						R449A					
		RECOMMENDED THERMOSTATIC CHARGE											
		DC, DCP100, DGA			DZ, DZP40			DC, DCP100, DGA			DZ, DZP40		
		EVAPORATOR TEMPERATURE °F											
		40°	20°	0°	-10°	-20°	-40°	40°	20°	0°	-10°	-20°	-40°
R-ER-SR	1/3	0.30	0.32	0.31	0.33	0.29	0.25	0.30	0.32	0.31	0.33	0.29	0.24
R-ER-SR	1/2	0.52	0.56	0.53	0.54	0.47	0.37	0.51	0.55	0.53	0.53	0.47	0.36
R-ER-SR	3/4	0.80	0.86	0.76	0.72	0.64	0.47	0.79	0.85	0.75	0.71	0.63	0.46
R-ER-SR	1-1/2	1.52	1.63	1.44	1.03	0.91	0.67	1.50	1.61	1.42	1.01	0.90	0.66
R-ER-SR	2	2.00	2.15	1.90	1.33	1.18	0.87	1.97	2.12	1.87	1.31	1.17	0.85
R-ER-SR	2-1/2	2.77	2.99	2.63	1.92	1.71	1.26	2.74	2.94	2.59	1.90	1.69	1.24
R-ER-SR	3-1/2	3.65	3.92	3.47	2.52	2.24	1.64	3.60	3.88	3.41	2.49	2.20	1.61
R-ER-SR	4	4.34	4.67	4.10	2.88	2.56	1.88	4.29	4.62	4.07	2.84	2.52	1.85
R-ER-SR	5	5.21	5.61	4.46	3.23	2.68	1.94	5.15	5.53	4.41	3.18	2.65	1.92
R-ER-SR	6	6.95	7.48	6.60	3.70	3.06	2.22	6.86	7.38	6.51	3.65	3.03	2.18
BQ - EBQ - SBQ	AAA	0.30	0.32	0.31	0.33	0.29	0.25	0.30	0.32	0.31	0.33	0.28	0.24
BQ - EBQ - SBQ	AA	0.60	0.65	0.62	0.62	0.54	0.46	0.60	0.64	0.61	0.61	0.53	0.45
BQ - EBQ - SBQ	A	1.34	1.47	1.41	1.51	1.30	1.11	1.32	1.45	1.39	1.49	1.29	1.10
BQ - EBQ - SBQ	B	2.48	2.64	2.25	2.19	1.90	1.63	2.44	2.60	2.21	2.16	1.87	1.60
BQ - EBQ - SBQ	C	3.75	3.99	3.40	3.35	2.92	2.48	3.70	3.94	3.36	3.31	2.88	2.45
BF- EBF - SBF	AAA	0.30	0.32	0.31	0.33	0.29	0.25	0.30	0.32	0.31	0.33	0.28	0.24
BF- EBF - SBF	AA	0.60	0.65	0.62	0.62	0.54	0.46	0.60	0.64	0.61	0.61	0.53	0.45
BF- EBF - SBF	A	1.34	1.47	1.41	1.51	1.30	1.11	1.32	1.45	1.39	1.49	1.29	1.10
BF- EBF - SBF	B	2.48	2.64	2.25	2.19	1.90	1.63	2.44	2.60	2.21	2.16	1.87	1.60
BF- EBF - SBF	C	3.75	3.99	3.40	3.35	2.92	2.48	3.70	3.94	3.36	3.31	2.88	2.45
EBS	7	7.49	7.50	6.27	5.69	4.55	4.22	7.40	7.40	6.17	5.61	4.49	4.15
EBS	10	10.2	10.2	8.50	7.25	5.80	5.37	10.0	10.0	8.38	7.14	5.71	5.29
EBS	12	12.5	12.9	9.85	9.22	7.72	6.60	12.4	12.7	9.72	9.10	7.62	6.50
EBS	17	17.9	18.7	13.9	13.2	11.1	8.75	17.7	18.4	13.7	12.9	11.0	8.62
O (Small)	12	12.7	12.4	9.84	8.38	7.37	6.30	12.6	12.2	9.70	8.26	7.26	6.20
O (Small)	17	17.4	16.8	13.5	13.4	11.7	10.1	17.2	16.6	13.3	13.2	11.6	9.9
O (Small)	28	28.1	27.3	19.4	16.0	14.1	12.0	27.7	26.8	19.2	15.7	13.9	11.8
O (Large)	40	40.4	43.1	31.2	24.0	21.0	18.0	39.9	42.5	30.8	23.6	20.8	17.8
O (Large)	45	46.8	49.9	36.2	26.0	22.9	19.5	46.2	49.3	35.7	25.7	22.6	19.2
O (Large)	60	60.2	64.2	47.6	30.0	26.4	22.5	59.5	63.3	45.9	29.6	26.0	22.2

R448/449 correction factors

EVAPORATOR TEMPERATURE °F	PRESSURE DROP ACROSS TEV (PSI)											
	30	50	75	100	125	150	175	200	225	250	275	300
	CORRECTION FACTOR, CF PRESSURE DROP											
40°	0.55	0.71	0.87	1.00	1.12	1.22	1.32	1.41	1.50	1.58	1.66	1.73
20° & 0°	0.49	0.63	0.77	0.89	1.00	1.10	1.18	1.26	1.34	1.41	1.48	1.55
-10° & -20°	0.45	0.58	0.71	0.82	0.91	1.00	1.08	1.15	1.22	1.29	1.35	1.41
-40°	0.41	0.53	0.65	0.76	0.85	0.93	1.00	1.07	1.13	1.20	1.25	1.31

REFRIGERANT	LIQUID TEMPERATURE ENTERING TEV °F														
	0	10	20	30	40	50	60	70	80	90	100	110	120	130	140
	CORRECTION FACTOR, CF LIQUID TEMPERATURE														
R448A	1.78	1.70	1.63	1.55	1.48	1.40	1.32	1.24	1.16	1.08	1.00	0.92	0.83	0.75	0.66
R449A	1.78	1.71	1.63	1.56	1.48	1.40	1.32	1.25	1.17	1.08	1.00	0.92	0.83	0.75	0.66

These factors include corrections for liquid refrigerant density and net refrigerating effect and are based on an evaporator temperature of 0°F. However, they may be used for any evaporator temperature from -40°F to 40°F since the variation in the actual factors across this range is insignificant.

SPORLAN TEV AWEF FACTORS

Annual Walk-In Efficiency Factors for Systems Utilizing Sporlan Thermostatic Expansion Valves

Annual Walk-in Energy Factor (AWEF) is an energy standard by the Department of Energy (DOE) that measures electrical energy input versus its cooling capacity. All commercial refrigeration equipment manufacturers should comply with the AWEF rating specified by the DOE. Walk-in equipment of 3000 ft² or less must conform to this new requirement.

Most unit manufacturers are accomplishing the new standard by lowering the head pressure setting of the unit. This lower head pressure setting greatly impacts expansion valve sizing. This bulletin will help provide thermostatic expansion valve selections for AWEF applications. **This bulletin should not be used for applications outside of AWEF.**

Sporlan researched compressor efficiencies, distributor sizing, and valve sizing at the maximum summer condition and the minimum winter condition for these applications. The values presented in the following tables provide maximum and minimum BTU/hr load at the rated condition of the unit. Most times, this rating will be at 105°F condensing temperature and 96°F liquid temperature. Recommendations in this bulletin are in accordance with AHRI 1250.

This bulletin will help the contractor and wholesaler accurately size and select the proper thermostatic expansion valve for the application. For selection of an electric expansion valve, reference Bulletin 500-100-AWEF.

SELECTION PROCEDURE for AWEF UNITS

1. Select the chart with the system refrigerant
2. Determine saturated suction temperature (SST)
3. Determine thermostatic charge required
4. Select appropriate valve for unit's capacity

Example: Select a Type ER valve for R-407A. The rated unit capacity is published at 4500 BTU/hr and operates at a +25°F saturated suction temperature.

Using the R-407A table, the ERVE-1/2 has a capacity range of 3201 – 5400 BTU/hr at +25°F. The rated capacity of the unit falls between these values. This means the ½ ton valve is correct for the application. The valve will use a KT-43-VC thermostatic charge. This means that the valve required is an ERVE-1/2-C.

The values in the tables below are in BTU/Hr. To determine the appropriate expansion valve, select a valve range that the rated condition of the AWEF unit falls within for the desired evaporator temperature.

R-404A / R-507

Valve Type	Nominal Capacity	Recommended Thermostatic Charge															
		KT-43-SC/PC										KT-43-SZ or KT-43-SZP					
		Saturated Suction Temperature (SST) / Evaporator Temperature °F															
		30°F		25°F		20°F		10°F		0°F		-10°F		-20°F		-30°F	
		Min.	Max.	Min.	Max.	Min.	Max.	Min.	Max.	Min.	Max.	Min.	Max.	Min.	Max.	Min.	Max.
BF SBF, EBF, BF **BQ** SBQ, EBQ, BQ	**AAA**	1000	1800	1000	2000	1000	2100	1000	2300	1000	2400	900	2200	800	2000	700	1900
	AA	1801	3700	2001	4100	2101	4300	2301	4700	2401	5000	2201	3900	2001	3600	1901	3400
	A	3701	8500	4101	9100	4301	9800	4701	10600	5001	11100	3901	9700	3601	8900	3401	8300
	B	8501	15300	9101	16500	9801	17500	10601	18000	11101	17900	9701	14000	8901	13000	8301	12200
	C	15301	23300	16501	25000	17501	26400	18001	27100	17901	27100	14001	21300	13001	19800	12201	18500

An EEV is recommended for applications above 30°F.

Valve Type	Nominal Capacity	Recommended Thermostatic Charge															
		KT-43-SC/PC										KT-43-SZ or KT-43-SZP					
		Saturated Suction Temperature (SST) / Evaporator Temperature °F															
		30°F		25°F		20°F		10°F		0°F		-10°F		-20°F		-30°F	
		Min.	Max.	Min.	Max.	Min.	Max.	Min.	Max.	Min.	Max.	Min.	Max.	Min.	Max.	Min.	Max.
R ER, SR, R	**1/6**	1000	1800	1000	2000	1000	2100	1000	2300	1000	2400	900	2200	800	2000	700	1900
	1/4	1801	3200	2001	3500	2101	3700	2301	4000	2401	4200	2201	3500	2001	3200	1901	2900
	1/2	3201	5200	3501	5400	3701	5700	4001	6200	4201	6500	3501	5400	3201	5000	2901	4500
	1	5201	9400	5401	10200	5701	10800	6201	11800	6501	12400	5401	9600	5001	9000	4501	8500
	1-1/2	9401	12300	10201	13400	10801	14300	11801	15500	12401	16400	9601	12600	9001	11700	8501	11100
	2	12301	17200	13401	18700	14301	19900	15501	21400	16401	22600	12601	17600	11701	16600	11101	15700
	3	17201	22600	18701	24500	19901	25900	21401	28200	22601	30000	17601	23200	16601	21700	15701	20500
	4	22601	32200	24501	35000	25901	36900	28201	40400	30001	42600	23201	33000	21701	30900	20501	29100
	6	32201	43100	35001	46400	36901	49500	40401	54000	42601	56700	33001	43900	30901	41000	29101	38900

An EEV is recommended for applications above 30°F.

SPORLAN TEV AWEF FACTORS

The values in the tables below are in BTU/Hr. To determine the appropriate expansion valve, select a valve range that the rated condition of the AWEF unit falls within for the desired evaporator temperature.

R-407A / R-407C / R-407F

Valve Type	Nominal Capacity	Recommended Thermostatic Charge															
		KT-43-VC										KT-43-VZ or KT-43-VZP40					
		Saturated Suction Temperature (SST) / Evaporator Temperature °F															
		30°F		25°F		20°F		10°F		0°F		-10°F		-20°F		-30°F	
		Min.	Max.	Min.	Max.	Min.	Max.	Min.	Max.	Min.	Max.	Min.	Max.	Min.	Max.	Min.	Max.
BF SBF, EBF, BF **BQ** SBQ, EBQ, BQ	**AAA**	1400	3000	1400	3200	1400	3400	1400	3400	1300	3400	900	2100	800	2000	700	1800
	AA	3001	6300	3201	6700	3401	7100	3401	7200	3401	7100	2101	5300	2001	4900	1801	4300
	A	6301	13700	6701	14500	7101	15200	7201	15500	7101	15400	5301	9400	4901	9000	4301	7800
	B	13701	23800	14501	25200	15201	26500	15501	27000	15401	26800	9401	17400	9001	16400	7801	14300
	C	23801	44300	25201	46800	26501	49400	27001	50200	26801	50200	17401	31300	16401	29400	14301	25600

An EEV is recommended for applications above 30°F.

Valve Type	Nominal Capacity	Recommended Thermostatic Charge															
		KT-43-VC										KT-43-VZ or KT-43-VZP40					
		Saturated Suction Temperature (SST) / Evaporator Temperature °F															
		30°F		25°F		20°F		10°F		0°F		-10°F		-20°F		-30°F	
		Min.	Max.	Min.	Max.	Min.	Max.	Min.	Max.	Min.	Max.	Min.	Max.	Min.	Max.	Min.	Max.
R ER, SR, R	**1/3**	1400	3000	1400	3200	1400	3400	1300	3400	1300	3400	900	2100	800	2000	700	1800
	1/2	3001	5100	3201	5400	3401	5700	3401	5800	3401	5800	2101	3600	2001	3400	1801	3000
	1	5101	8500	5401	9100	5701	9500	5801	9800	5801	9800	3601	6700	3401	6300	3001	5500
	1-1/2	8501	14900	9101	15900	9501	16500	9801	17100	9801	17100	6701	9400	6301	8900	5501	7800
	2	14901	19600	15901	20800	16501	21700	17101	22400	17101	22600	9401	15100	8901	14200	7801	12500
	3	19601	27300	20801	28900	21701	30400	22401	31300	22601	31300	15101	17700	14201	16800	12501	14600
	4	27301	35900	28901	37900	30401	39900	31301	41100	31301	41100	17701	26500	16801	24900	14601	21700
	5	35901	42600	37901	45100	39901	47400	41101	49000	41101	49100	26501	30700	24901	28800	21701	25100
	6	42601	51100	45101	54200	47401	57100	49001	58900	49101	59000	30701	34800	28801	32500	25101	28500
	8	51101	68100	54201	72500	57101	75700	58901	78200	59001	78700	34801	44900	32501	39600	28501	34500
	10	68101	89000	72501	94000	75701	98900	78201	101900	78701	102200	–	–	–	–	–	–
	12	89001	103100	94001	109300	98901	115300	101901	117900	102201	118900	–	–	–	–	–	–

An EEV is recommended for applications above 30°F.

SPORLAN DRIERS LIST PRICING

Part #	Description	LIST
C-032-CAP-SPO	SPV FILTER DRIER 1/4 400064	$69.50
C-032-CAP-T-SPO	SPV FILTER DRIER 1/4 400072	$83.70
C-032-FM-SPO	SPV FILTER DRIER 1/4 400032	$73.80
C-032-F-SPO	SPV FILTER DRIER 1/4 400016	$61.50
C-032-SPO	SPV FILTER DRIER 1/4 400000	$52.60
C-032-S-SPO	SPV FILTER DRIER 1/4 400052	$50.60
C-033-SPO	SPV FILTER DRIER 3/8 400088	$64.30
C-033-S-SPO	SPV FILTER DRIER 3/8 400001	$52.30
C03E124-SPO	SPV FILTER DRIER 3/8 400110-003	
C052-CAP-TT-HH	SPV FILTER DRIER 1/4 400219	-
C-052-HH-SPO	SPV FILTER DRIER 1/4 400232	$87.00
C-052-SPO	SPV FILTER DRIER 1/4 400200	$62.00
C-052-S-SPO	SPV FILTER DRIER 1/4 400249	$59.20
C-053-SPO	SPV FILTER DRIER 3/8 400288	$63.10
C-053-S-SPO	SPV FILTER DRIER 3/8 400329	$59.20
C-082-HH-SPO	SPV FILTER DRIER 1/4 400424	$98.50
C-082-SPO	SPV FILTER DRIER 1/4 400416	$77.50
C-082-S-SPO	SPV FILTER DRIER 1/4 400429	$76.90
C-083-F-SPO	SPV FLARE DRIER 3/8 400508	
C-083-HH-SPO	SPV FILTER DRIER 3/8 400488	$98.50
C-083-SPO	SPV FILTER DRIER 3/8 400472	$75.60
C-083-S-SPO	SPV FILTER DRIER 3/8 400503	$72.80
C-084-SPO	SPV FILTER DRIER 1/2 400536	$86.50
C-084-S-SPO	SPV FILTER DRIER 1/2 400437	$77.80
C-084-S-T-HH-SPO	SPV FILTER DRIER 1/2 400441	$115.10
C-14411-G-SPO	SPV DRIER SHELL 1-3/8 402431	$1,548.00
C-1448-P-SPO	SPV DRIER SHELL 1 NPT 402385	$2,025.00
C-1449-G-SPO	SPV DRIER SHELL 1-1/8 402401	$1,548.00
C-144-S-TT-HH-SPO	SPV FILTER DRIER 1/2 400796	
C-145-S-TT-HH-SPO	SPV FILTER DRIER 5/8 400801	$197.80
C-146-S-TT-HH-SPO	SPV FILTER DRIER 3/4 400806	$194.70
C-147-S-TT-HH-SPO	SPV FILTER DRIER 7/8 400811	$197.40
C-149-S-TT-HH-SPO	SPV FILTER DRIER 1-1/8 400816	$229.90
C-162-HH-SPO	SPV FILTER DRIER 1/4 401008	$122.60
C-162-SPO	SPV FILTER DRIER 1/4 401000	$100.80
C-162-S-SPO	SPV FILTER DRIER 1/4 401018	$103.40
C-163-F-SPO	SPV FLARE DRIER 3/8 401072	$122.70
C-163-HH-SPO	SPV FILTER DRIER 3/8 401080	$115.40
C-163-S-HH-SPO	SPV FILTER DRIER 3/8 401022	$108.20
C-163-SPO	SPV FILTER DRIER 3/8 401048	$96.90
C-163-S-SPO	SPV FILTER DRIER 3/8 401021	$93.30
C-164-HH-SPO	SPV FILTER DRIER 1/2 401152	$135.50
C-164-S-HH-SPO	SPV FILTER DRIER 1/2 401025	$122.90
C-164-SPO	SPV FILTER DRIER 1/2 401128	$105.70
C-164-S-SPO	SPV FILTER DRIER 1/2 401023	$101.80
C-164-S-T-HH-SPO	SPV FILTER DRIER 1/2 401026	$154.90
C-165-HH-SPO	SPV FILTER DRIER 5/8 401232	$135.50
C-165-S-HH-SPO	SPV FILTER DRIER 5/8 401028	$130.40
C-165-SPO	SPV FILTER DRIER 5/8 401216	$113.30
C-165-S-SPO	SPV FILTER DRIER 5/8 401035	$108.00
C-165-S-T-HH-SPO	SPV FILTER DRIER 5/8 401029	$158.10
C-166-S-T-HH-SPO	SPV FILTER DRIER 3/4 401030	$167.20
C-167-S-T-HH-SPO	SPV FILTER DRIER 7/8 401033	$165.60

*Pricing in this list is subject to change, please contact your local branch to verify pricing.

SPORLAN DRIERS LIST PRICING

Part #	Description	LIST
C-19212-P-SPO	SPV 1-1/2 DRIER SHELL C19212P	$2,438.00
C-19217-G-SPO	SPV 2-1/8 DRIER SHELL 402529	$2,567.00
C-303-HH-SPO	SPV 3/8 FILTER DRIER 401336	$239.30
C-303-SPO	SPV 3/8 FILTER DRIER 401328	$177.50
C-303-S-SPO	SPV 3/8 FILTER DRIER 401305	$173.10
C-304-HH-SPO	SPV 1/2 FILTER DRIER 401376	$225.70
C-304-S-HH-SPO	SPV 1/2 FILTER DRIER 401309	$219.50
C-304-SPO	SPV 1/2 FILTER DRIER 401360	$173.20
C-304-S-SPO	SPV 1/2 FILTER DRIER 401307	$166.70
C-305-HH-SPO	SPV 5/8 FILTER DRIER 401432	$225.70
C-305-S-HH-SPO	SPV 5/8 FILTER DRIER 401310	$217.20
C-305-SPO	SPV 5/8 FILTER DRIER 401408	$173.20
C-305-S-SPO	SPV 5/8 FILTER DRIER 401449	$166.70
C-305-S-T-HH-SPO	SPV 5/8 FILTER DRIER 401311	$271.20
C-306-S-SPO	SPV 3/4 FILTER DRIER 401313	$205.60
C-306-S-T-HH-SPO	SPV 3/4 FILTER DRIER 401314	$262.50
C-307-S-SPO	SPV 7/8 FILTER DRIER 401505	$186.70
C-309-S-SPO	SPV 1-1/8 FILTER DRIER 401317	$219.70
C-309-S-T-HH-SPO	SPV 1-1/8 FILTER DRIER 401318	$280.50
C-30E5-SPO	SPV 7/8 ROTOLOCK FILTER DRIER 401544	$385.00
C-413-P-SPO	SPV 3/8 FILTER DRIER 401608	
C-413-SPO	SPV 3/8 FILTER DRIER 401592	$266.50
C-413-S	SPV 3/8” FILTER DRIER	-
C-414-HH-SPO	SPV 1/2 FILTER DRIER 401632	$319.00
C-414-SPO	SPV 1/2 FILTER DRIER 401624	$257.80
C-414-S-SPO	SPV 1/2 FILTER DRIER 401609	$248.10
C-415-HH-SPO	SPV 5/8 FILTERR DRIER 401672	$319.00
C-415-S-HH-SPO	SPV 5/8 FILTER DRIER 401611	$298.10
C-415-SPO	SPV 5/8 FILTER DRIER 401656	$255.30
C-415-S-SPO	SPV 5/8 FILTER DRIER 401610	$245.70
C-417-S-HH-SPO	SPV 7/8 FILTER DRIER 401615	$307.00
C-417-S-SPO	SPV 7/8 FILTER DRIER 401614	$242.00
C-417-S-T-HH-SPO	SPV 7/8 FILTER DRIER 401617	$343.00
C-419-S-SPO	SPV 1-1/8 FILTER DRIER 401618	$283.80
C-419-S-T-HH-SPO	SPV 1-1/8 FILTER DRIER 401619	$358.00
C-4311-S-T-HH-SPO	SPV 1-3/8 FILTER DRIER 401816	$629.00
C-4313-S-T-HH-SPO	SPV 1-5/8 FILTER DRIER 401824	$658.00
C-437-S-T-HH-SPO	SPV 7/8 FILTER DRIER 401804	$631.00
C-439-S-T-HH-SPO	SPV 1-1/8 FILTER DRIER 401808	$623.00
C-607-S-SPO	SPV 7/8 FILTER DRIER 401837	$368.00
C-609-S-SPO	SPV 1-1/8 FILTER DRIER 401865	$383.00
C-609-S-T-HH-SPO	SPV 1-1/8 FILTER DRIER 401839	$500.00
C-9611-G-SPO	SPV 1-3/8 DRIER SHELL 402335	$1,328.00
C-9613-G-SPO	SPV 1-5/8 DRIER SHELL 402343	$1,397.00
C-966-P-SPO	SPV 3/4 NPT DRIER SHELL 402235	$1,640.00
C-967-G-SPO	SPV 7/8 DRIER SHELL 402251	$1,231.00
C-969-G-SPO	SPV 1-1/8 DRIER SHELL 402289	$1,231.00
CG-307-S-SPO	SPORLAN FILTER-DRIER	
CSG-083S-SPO	SPV SIGHTGLASS & DRIER 409993	$178.30
CSG-084-S-SPO	SPV SIGHTGLASS & DRIER 409996	$204.60
CSG-163S-SPO	SPV SIGHTGLASS & DRIER 409991	$202.60
CSG-164-S-SPO	SPV SIGHTGLASS & DRIER 401385	$233.20

*Pricing in this list is subject to change, please contact your local branch to verify pricing.

SPORLAN TEV AWEF FACTORS

The values in the tables below are in BTU/Hr. To determine the appropriate expansion valve, select a valve range that the rated condition of the AWEF unit falls within for the desired evaporator temperature.

R-448A / R-449A

Valve Type	Nominal Capacity	Recommended Thermostatic Charge													
		KT-43-VC								KT-43-VZ or KT-43-VZP40					
		Saturated Suction Temperature (SST) / Evaporator Temperature °F													
		25°F		20°F		10°F		0°F		-10°F		-20°F		-30°F	
		Min.	Max.	Min.	Max.	Min.	Max.	Min.	Max.	Min.	Max.	Min.	Max.	Min.	Max.
BF SBF, EBF, BF **BQ** SBQ, EBQ, BQ	**AAA**	1900	3100	1900	3500	1900	3200	1700	3200	1000	2200	900	2100	700	1800
	AA	3101	6900	3501	6800	3201	6800	3201	6800	2201	5400	2101	5000	1801	4400
	A	6901	15600	6801	15400	6801	15300	6801	14300	5401	9600	5001	9100	4401	8000
	B	15601	26400	15401	25800	15301	25100	14301	25100	9601	17700	9101	16800	8001	14700
	C	26401	42900	25801	45300	25101	46500	25101	46500	17701	31900	16801	30200	14701	26400

An EEV is recommended for applications above 25°F.

Valve Type	Nominal Capacity	Recommended Thermostatic Charge													
		KT-43-VC								KT-43-VZ or KT-43-VZP40					
		Saturated Suction Temperature (SST) / Evaporator Temperature °F													
		30°F		25°F		20°F		10°F		0°F		-10°F		-20°F		-30°F	
		Min.	Max.	Min.	Max.	Min.	Max.	Min.	Max.	Min.	Max.	Min.	Max.	Min.	Max.	Min.	Max.
R ER, SR, R	**1/3**	1900	3500	1900	3500	1900	3500	1800	3300	1700	3200	1000	2200	900	2100	700	1800
	1/2	3501	4800	3501	4800	3501	5200	3301	5400	3201	5400	2201	3700	2101	3500	1801	3100
	3/4	4801	6300	4801	6800	5201	7100	5401	7400	5401	7400	3701	6000	3501	5600	3101	4400
	1	6301	9900	6801	9900	7101	9900	7401	9500	7401	9100	6001	6800	5601	6200	4401	5700
	1-1/2	9901	13500	9901	14400	9901	15200	9501	15900	9101	12000	6801	7400	6201	6600	5701	6700
	2	13501	15700	14401	19000	15201	20000	15901	20800	12001	14300	7401	9600	6601	9100	6701	8000
	2-1/2	15701	24600	19001	26300	20001	27700	20801	28900	14301	25100	9601	17700	9101	17100	8001	14700
	3-1/2	24601	34000	26301	34000	27701	36700	28901	38000	25101	38500	17701	27000	17101	25500	14701	22500
	5	34001	45900	34001	49400	36701	52000	38001	54300	38501	54800	27001	35500	25501	33400	22501	29400
	6	45901	61400	49401	66200	52001	69800	54301	72100	54801	72800	35501	45700	33401	40600	29401	35500

An EEV is recommended for applications above 30°F.

SPORLAN TEV QUICK REFERENCE GUIDE

Q/BQ Build a Valve Instructions

Type Q & BQ Valves

For Refrigerants 22-134a-404A-410A*-507 – SAE Flare & Extended ODF Solder Connections

*Type Q, EQ, and SQ are not approved for R-410A applications.

The Sporlan Q & BQ series are replaceable cartridge style valves designed for small refrigeration systems, such as refrigerated cases, coolers, and freezers. The externally equalized versions of these valves are ideal for air conditioning and heat pump systems. BQ valves are balanced ported, engineered specifically for systems with a wide range of operating conditions and may be applied on bi-directional applications.

Q & BQ valves are supplied as three individual component parts: the **thermostatic element**, the **valve body**, and the **replaceable cartridge** or orifice. The interchangeable nature of the Q & BQ family make it ideal for reducing inventory, while increasing valve options — so, the right valve is always on hand.

BODY FEATURES

Q & BQ brass body type valves feature Sporlan's traditional knife edge, metal-to-metal thermostatic element to valve body construction, which ensures a leak-proof joint.

SELECTIVE CHARGES

Sporlan selective thermostatic charges are specifically designed for low temperature, medium temperature, and air conditioning applications. The elements are manufactured with a large flat diaphragm to reduce diaphragm stresses and provide precise control. And, because Q & BQ valve bodies and thermostatic elements are supplied as independent components, the installer is able to select the best possible thermostatic charge for the application.

INTERNAL PORT DESIGN

Refrigerant flow through the valve port opposes the pin movement in all type Q and BQ valves. This provides improved stability at light loads, when the pin modulates to a position close to the port. Additionally, charge migration, is reduced or eliminated by the Q & BQ valve design. By engineering the liquid flow to enter through the top of the valve body, the liquid refrigerant warms the thermostatic element and minimizes the potential for charge migration.

For complete details of construction, see page 35.

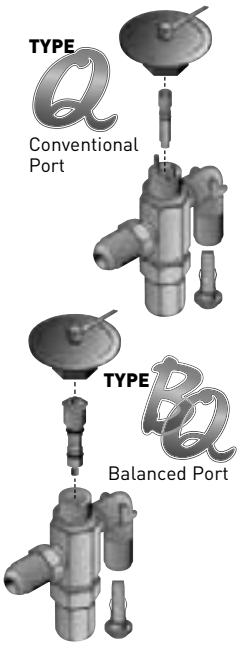

SELECTING COMPONENTS STEP ONE: SELECT BODY STYLE

BODY

Flare Connections	Extended Solder Connections	Extended Solder Connections with Forged Inlet and Replaceable Strainer
Q SAE (Internally Equalized) **QE** SAE (Externally Equalized)	**EQ** ODF (Internally Equalized) **EQE** ODF (Externally Equalized)	**SQ** ODF (Internally Equalized) **SQE** ODF (Externally Equalized)
BQ SAE (Internally Equalized) **BQE** SAE (Externally Equalized)	**EBQ** ODF (Internally Equalized) **EBQE** ODF (Externally Equalized)	**SBQ** ODF (Internally Equalized) **SBQE** ODF (Externally Equalized)

SPORLAN TEV QUICK REFERENCE GUIDE

Type Q & BQ Valves

For Refrigerants 22-134a-404A-410A*-507 – SAE Flare & Extended ODF Solder Connections

STEP TWO: SELECT CAPACITY CAR-

*Type Q, EQ, and SQ are not approved for R-410A applications.

CARTRIDGE

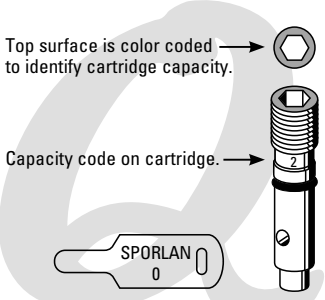

Identification tag with cartridge number (bends around capillary tubing).

Q CARTRIDGE SERVICE KIT PART NUMBER 184000

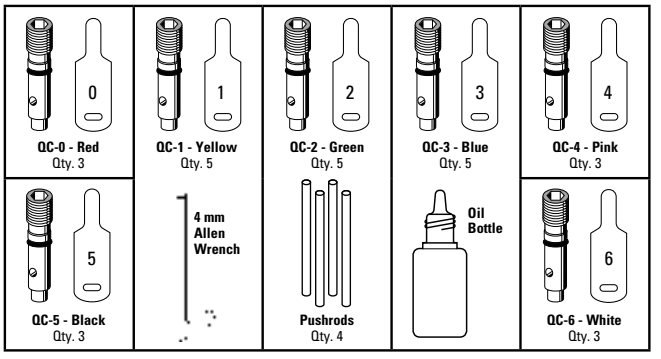

INDIVIDUAL REPLACEMENT PARTS

PART NUMBER	SIZE	COLOR CODE
CARTRIDGE and I.D. TAG		
QC-0	0	Red
QC-1	1	Yellow
QC-2	2	Green
QC-3	3	Blue
QC-4	4	Pink
QC-5	5	Black
QC-6	6	White
MISCELLANEOUS PARTS		
OB-1	Oil Bottle (With Oil)	
AW-1	4 mm Allen Wrench	
CSK-1	Q Cartridge Service Kit (Empty)	
184000	Q Cartridge Service Kit (Complete as noted above)	

CAPACITIES

NOMINAL CAPACITY (TONS) of SPORLAN VALVE TO BE REPLACED									Q VALVE CARTRIDGE	
R-12	R-22, R-422D	R-134a	R-401A	R-402A	R-404A	R-410A	R-502	R-507	SIZE	COLOR CODE
1/8	1/4	1/8	1/8	1/8	1/8	NOT APPROVED	1/8	1/8	0	Red
1/6	1/3	1/6	1/6	1/6	1/6		1/6	1/6		
1/4	1/2	1/4	1/4	1/4	1/4		1/4	1/4	1	Yellow
	3/4									
1/2	1	1/2	1/2	1/2	1/2		1/2	1/2	2	Green
1	1-1/2	1	1	1	1		1	1	3	Blue
1-1/2	2	1-1/2	1-1/2	1-1/2	1-1/2		1-1/2	1-1/2	4	Pink
	2-1/2									
2	3	2	2	2	2		2	2	5	Black
2-1/2	4	2-1/2	2-1/2	3	3		3	3	6	White
3	5	3	3							

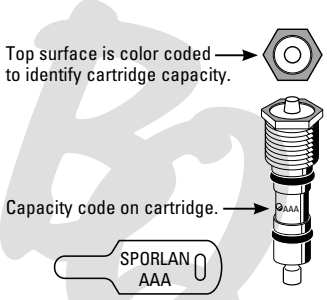

Identification tag with cartridge number (bends around capillary tubing).

BQ CARTRIDGE SERVICE KIT PART NUMBER 184007

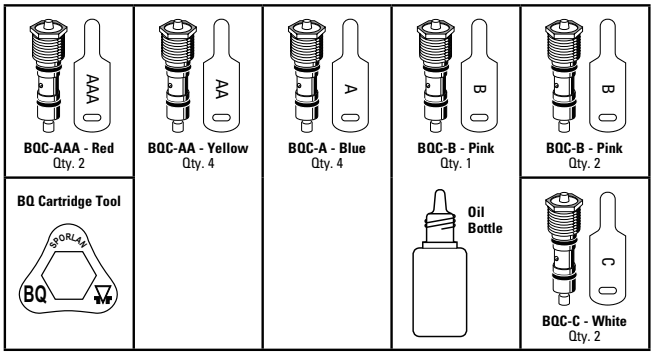

INDIVIDUAL REPLACEMENT PARTS

PART NUMBER	SIZE	COLOR CODE
CARTRIDGE and I.D. TAG*		
BQC-AAA	AAA	Red
BQC-AA	AA	Yellow
BQC-A	A	Blue
BQC-B	B	Pink
BQC-C	C	White
MISCELLANEOUS PARTS		
OB-1	Oil Bottle (With Oil)	
4444-000	BQ Cartridge Tool	
CSK-1	BQ Cartridge Service Kit (Empty)	
184007	BQ Cartridge Service Kit (Complete as noted above)	

*BQC with B15 (15% bleed port) is available.

CAPACITIES

NOMINAL CAPACITY (TONS) of SPORLAN VALVE TO BE REPLACED									BQ VALVE CARTRIDGE	
R-12	R-22, R-422D	R-134a	R-401A	R-402A	R-404A	R-410A	R-502	R-507	SIZE	COLOR CODE
1/8 thru 1/5	1/8 thru 1/3	1/8 thru 1/5	1/8 thru 1/5	1/8 thru 1/5	1/8 thru 1/5	1/4 thru 1/3	1/8 thru 1/5	1/8 thru 1/5	AAA	Red
1/4 thru 1/3	1/2 thru 2/3	1/4 thru 1/3	1/4 thru 1/3	1/4 thru 1/3	1/4 thru 1/3	1/2 thru 3/4	1/4 thru 1/3	1/4 thru 1/3	AA	Yellow
1/2 thru 1	3/4 thru 1-1/2	1/2 thru 1	1/2 thru 1	1/2 thru 1	1/2 thru 1	1 thru 1-3/4	1/2 thru 1	1/2 thru 1	A	Blue
1-1/4 thru 1-3/4	1-3/4 thru 3	1-1/4 thru 1-3/4	1-1/4 thru 1-3/4	1-1/4 thru 2	1-1/4 thru 2	2 thru 3-1/2	1-1/4 thru 2	1-1/4 thru 2	B	Pink
2 thru 3	3-1/4 thru 5-1/2	2 thru 3	2 thru 3	2-1/4 thru 3	2-1/4 thru 3	4 thru 6	2-1/4 thru 3	2-1/4 thru 3	C	White

SPORLAN TEV QUICK REFERENCE GUIDE

Type Q & BQ Valves

For Refrigerants 22-134a-404A-410A*-507 – SAE Flare & Extended ODF Solder Connections

STEP TWO: SELECT CAPACITY CARTRIDGE

NOMINAL CAPACITY (Tons) of the Valve to be REPLACED					Q VALVE CARTRIDGE	
R-22 / R-422D	R-134a / R-513A	R-404A / R-507	R-407A/C/F	R-448A / R-449A	SIZE	COLOR CODE
1/4	1/8	1/8	1/4	1/4	0	RED
1/3	1/6	1/6	1/3	1/3		
1/2 or 3/4	1/4	1/4	1/2 or 3/4	1/2 or 3/4	1	YELLOW
1	1/2	1/2	1	1	2	GREEN
1-1/2	1	1	1-1/2	1-1/2	3	BLUE
2 or 2-1/2	1-1/2	1-1/2	2 or 2-1/2	2 or 2-1/2	4	PINK
3	2	2	3	3	5	BLACK
4 or 5	2-1/2 or 3	3	4 or 5	4 or 5	6	WHITE

NOMINAL CAPACITY (Tons) of the Valve to be REPLACED						BQ VALVE CARTRIDGE	
R-22 / R-422D	R-134a / R-513A	R-404A / R-507	R-407A/C/F	R-410A	R-448A / R-449A	SIZE	COLOR CODE
1/8 thru 1/3	1/8 thru 1/5	1/8 thru 1/5	1/8 thru 1/3	1/4 thru 1/3	1/8 thru 1/3	AAA	RED
1/2 thru 2/3	1/4 thru 1/3	1/4 thru 1/3	1/2 thru 2/3	1/2 thru 3/4	1/2 thru 2/3	AA	YELLOW
3/4 thru 1-1/2	1/2 thru 1	1/2 thru 1	3/4 thru 1-1/2	1 thru 1-3/4	3/4 thru 1-1/2	A	BLUE
1-3/4 thru 3	1-1/4 thru 1-3/4	1-1/4 thru 2	1-3/4 thru 3	2 thru 3-1/2	1-3/4 thru 3	B	PINK
3-1/4 thru 5-1/2	2 thru 3	2-1/4 thru 3	3-1/4 thru 5-1/2	4 thru 6	3-1/4 thru 5-1/2	C	WHITE

NOTE: BQ cartridge AA, A, B and C are also available with 15% bleed for R-22 and R-410A

SPORLAN Q SERIES TEV

Q & BQ OVERHAUL!

Q Series Interchangeable Cartridge Style TEVs

New Case, New Workstation



The **Q Series Interchangeable Cartridge Style TEV** case and workstation have been overhauled to make organization, assembly and replenishing of Q Series components quicker and easier than ever before!

The **Q Series Case** comes standard with 4 valve bodies, 6 thermostatic elements and the cartridge service kit. The case is available in three different mixes of popular components for every application.

The **Q Series Workstation** provides wholesalers ample space to store and assemble Q Series valve components, both **conventional port (Type Q)** and **balanced port (Type BQ)**. This sturdy steel workstation, available with swivel lock casters, accommodates almost any sales floor.

Q Series Case

BQ SOLDER

P/N 168392

SBQ BODIES
- **(1) 3/8 x 1/2 ODF**

EBQE BODIES
- **(1) 3/8 x 1/2 ODF**

SBQE BODIES
- **(2) 3/8 x 1/2 X 1/4 ODF**

ELEMENTS
- **(2) KT-43-JC-5'**
- **(1) KT-43-VC-5'**
- **(1) KT-43-VZ-5'**
- **(1) KT-43-SZ-5'**
- **(1) KT-43-SZP-5'**

BQ CARTRIDGE SERVICE KIT

NEW Robust Contractor Grade Case!



Q Conventional Port TEVs

Q Case - Stocked (Flare)
Item Number: 168013

Q Case - Stocked (Solder)
Item Number: 168068

Q Case - Stocked (Flare/Solder)
Item Number: 168069

Q/BQ Case (Carry) Empty
Item Number: 953539



BQ Balanced Port TEVs

BQ Case - Stocked (Flare)
Item Number: 168391

BQ Case - Stocked (Solder)
Item Number: 168392

BQ Case - Stocked (Flare/Solder)
Item Number: 168393

Q/BQ Case (Carry) Empty
Item Number: 953539

Replacement Parts for Refrigerant Retrofit Bulletin 122-10, April 2013

THERMOSTATIC EXPANSION VALVES - NON-ADJUSTABLE

When changing refrigerants, an adjustable bottom cap assembly is required to change the superheat setting.

Product	Replacement Parts Needed	Description P/N	Item Number
Y1150 EF valve	Y1150 EF valve bottom cap kit	KA-4	183006
BI valve	BI valve bottom cap kit	KA-4/BI	183013

SOLENOID VALVES

The Enclosing Tube Gasket and Manual Lift Stem are potential leak points when changing refrigerants. The enclosing tube design and gasket changed in 1998-1999 to the Wolverine style. The older style (before 6-99) requires replacement of the enclosing tube and gasket. See information below.

NOTE: Wolverine Gaskets may not require changing.

Normally Closed Product	Replacement Parts Needed	Description P/N	Item Number
(M)B6/(M)E6*	MB/ME6 Enclosing Tube Kit (includes enclosing tube and gasket)	KE-6	382435
	Manual Lift Stem Kit	KM-1	382460
(C)(M)B9/(C)(M)E9*	MB/ME9 Enclosing Tube Kit (includes enclosing tube and gasket)	KE-9	382355
	Manual Lift Stem Kit	KM-2	382470
(C)(M)B10*	MB/ME10 Enclosing Tube Kit (includes enclosing tube and gasket)	KE-10/14	382390
	Manual Lift Stem Kit	KM-3	382480
(C)(M)E10*	MB/ME10 Enclosing Tube Kit (includes enclosing tube and gasket)	KE-10/14	382390
	Manual Lift Stem Kit	KM-5	382500
(C)(M)B14*	MB/ME14 Enclosing Tube Kit (includes enclosing tube and gasket)	KE-10/14	382390
	Manual Lift Stem Kit	KM-3	382480
(C)(M)E14*	MB/ME14 Enclosing Tube Kit (includes enclosing tube and gasket)	KE-10/14	382390
	Manual Lift Stem Kit	KM-4	382490
(C)(M)B19/(C)(M)E19*	MB/ME19 Enclosing Tube Kit (includes enclosing tube and gasket)	KE-19	382365
	Manual Lift Stem Kit	KM-5	382500
(M)B25/(M)E25*	MB/ME25 Enclosing Tube Kit (includes enclosing tube and gasket)	KE-25	382400
	Manual Lift Stem Kit	KM-6	382510
(M)E34*	ME34 Enclosing Tube Kit (includes enclosing tube and gasket)	KE-9	382355
	ME34 Body Flange (Tetraseal)	2645-000	183675
	Manual Lift Stem Kit	KM-5	382500
(M)E35	ME35 Parts Kit (includes enclosing tube, gasket, and o-ring)	KS-E35	381118
	Manual Lift Stem Kit	KM-7	382511
(M)E42*	ME42 Enclosing Tube Kit (includes enclosing tube and gasket)	KE-9	382355
	ME42 Body Flange (Tetraseal)	938-1	183710
	Manual Lift Stem Kit	KM-8	382512

Manual Lift Stem information, if required, is shown above.

Normally Open Product	Replacement Parts Needed	Description P/N	Item Number
OB9/OE9*	OB9/OE9 Enclosing Tube Kit	KE-OB9/OE9	381404
OB10/OE10*	OB10/OE10 Parts Kit	KS-OB10/OE10	381353
OB14/OE14*	OB14/OE14 Parts Kit	KS-OB14/OE14	381366
OB19/OE19*	OB19/OE19 Parts Kit	KS-OB19/OE19	381379
OB25/OE25*	OB25/OE25 Parts Kit	KS-OB25/OE25	381392
OE35	OE35 Parts Kit	KS-OE35	381130
OE34*	Enclosing Tube Kit	KE-OB9/OE9	381404
	OE34 Body Flange (Tetraseal)	2645-000	183675
OE42*	Enclosing Tube Kit	KE-OB9/OE9	381404
	OE42 Body Flange Tetraseal	938-1	183710

*For solenoid valves 6-99 and newer, replacement Wolverine Gasket available if needed. (See P/Ns on following page.)

SOLENOID VALVES - REPLACEMENT WOLVERINE GASKETS

Product	Replacement Parts Needed	Description P/N	Item Number
(M)B6/(M)E6, (M)E35	Enclosing Tube Gasket **(Wolverine)**	14000-1	380103
(C)(M)B9/(C)(M)E9, (M)E34, (M)E42, OB9/OE9, OE34, OE42	Enclosing Tube Gasket **(Wolverine)**	14000-2	380104
(C)(M)B10/(C)(M)E10, (C)(M)B14/(C)(M)E14, OB10/OE10, OB14/OE14	Enclosing Tube Gasket **(Wolverine)**	14000-3	380100
(C)(M)B19/(C)(M)E19, OB19/OE19	Enclosing Tube Gasket **(Wolverine)**	14000-4	380101
(C)(M)B25/(C)(M)E25, OB25/OE25	Enclosing Tube Gasket **(Wolverine)**	14000-5	380102

Solenoid Accessories

Solenoid Magnet - 310250
Solenoid Manual Lift Stem - 958121

REPLACEABLE CORE SHELLS and OIL FILTERS

Product	Replacement Parts Needed	Description P/N	Item Number
CA Shell	Replaceable Filter-Drier Core(s), Secondary Filter	Various	—
	End Plate Gasket (C-480 through C-1920)	1288-001	481125
	End Plate Gasket (C-30000 and C-40000)	1288-013	480096
RSF Shell	Replaceable Filter-Drier Core(s) or Replaceable Pleated Element	Various	—
	End Plate Gasket (1/16" thick)	1288-001	481125
ROF Shell	Replaceable Oil Filter Cartridge	OFE-1	960015
	End Plate Gasket (1/16" thick)	1288-005	481103

Sight Glass Accessories

K-SA-4 Indicator Paper - 780002

OIL LEVEL CONTROLS

NOTE: AOL Oil Level Adaptor Kits may require seal replacement. Consult compressor manufacturer and/or Sporlan for seal information.

Product	Replacement Parts Needed	Description P/N	Item Number
OL-60	Oil Level Control O-Ring *2 Required*	821-125	968019
	Oil Level Control Quad Ring	JP-1222-000	968003

SPORLAN REPLACEMENT PARTS

3-Way Valves (Heat Reclaim, Split Condenser, and Defrost)

Appropriate seals shown below. Sporlan recommends replacing body flange style 3-way valves due to the time associated with disassembly, changing the body o-ring, and rebuilding the valve.

Product	Replacement Parts Needed	Description P/N	Item Number
8D	8D/12D Enclosing Tube Kit	KE-8D/12D	382327
	Pilot Assembly Gasket (Prior to 3-00)	2645-000	183675
	Pilot Assembly Gasket (3-00 to Present) **(Wolverine)**	14000-5	380102
	Lower Body O-ring (6-97 and older)	623-128	183785
	Lower Body O-ring (7-97 to Present)	14000-6	380106
12D	8D/12D Enclosing Tube Kit	KE-8D/12D	382327
	Pilot Assembly Gasket (Prior to 3-00)	2645-000	183675
	Pilot Assembly Gasket (3-00 to Present) **(Wolverine)**	14000-5	380102
	Lower Body O-ring	623-137	183785
16D	KE-6 Enclosing Tube Kit (12-03 to Present)	KE-6	382435
	KE-9 Enclosing Tube Kit (Prior to 12-03)	KE-9	382355
	Pilot Assembly Gasket (Prior to 3-00)	2645-000	183675
	Pilot Assembly Gasket (3-00 to Present) **(Wolverine)**	14000-5	380102
	Lower Body O-ring (Prior to 6-06)	1335-235	183717
10G	10G Enclosing Tube	KE-6	382435
	Pilot Assembly Gasket (Prior to 3-00) *2 Required*	2645-000	183675
	Pilot Assembly Gasket (3-00 to Present) **(Wolverine)** *2 Required*	14000-5	380102

(S)ORIT VALVES

SORIT Valves have used 3 different enclosing tube gasket/o-ring designs. Depending on the manufacturing date, one of the following was used. Replace with same design.

Product	Replacement Parts Needed	Description P/N	Item Number
ORIT-12/ORIT-15	Adaptor Gasket (Tetraseal)	2645-000	183675
ORIT-20	Adaptor Gasket **(Wolverine)**	2539-000	183604
SORIT-12/SORIT-15	Adaptor Gasket (Tetraseal)	2645-000	183675
	Enclosing Tube O-Ring (4 screw style)	621-014	183685
	Enclosing Tube O-Ring	621-016	183690
	Enclosing Tube Gasket Date Code 3898 to present **(Wolverine)**	4323-000	183184
SORIT-20	Adaptor Gasket **(Wolverine)**	2539-000	183604
	Enclosing Tube O-Ring (4 screw style)	621-014	183685
	Enclosing Tube O-Ring	621-016	183690
	Enclosing Tube Gasket Date Code 3898 to present **(Wolverine)**	4323-000	183184

(S)ORIT-PI VALVES

Product	Replacement Parts Needed	Description P/N	Item Number
ORIT-PI-2/ORIT-PI-3/ ORIT-PI-4/ORIT-PI-5	O-Ring Kit (2 Body & 2 Guide Pin)	KG-(S)ORIT-PI	380901
SORIT-PI-2/SORIT-PI-3/ SORIT-PI-4/SORIT-PI-5	O-Ring Kit (2 Body & 2 Guide Pin)	KG-(S)ORIT-PI	380901
	Enclosing Tube O-Ring	621-016	183690
	Enclosing Tube Gasket Date Code 3598 to present **(Wolverine)**	4323-000	183184
	A4 Element (Subcooler EPR)	A4 75/150	908073

DEFROST DIFFERENTIAL VALVES

Product	Replacement Parts Needed	Description P/N	Item Number
LDR-15/XTM	O-Ring	4508-008	958148
	Body Flange Tetraseal Gasket	2645-000	183675
	Enclosing Tube Parts Kit (Prior to 3-99)	KE-OBS/OE9	381404
	Enclosing Tube Gasket (3-99 to Present) **(Wolverine)**	14000-2	380104
OLDR-15	O-Ring	4508-008	958148
	Body Flange Tetraseal Gasket	2645-000	183675
	Enclosing Tube Kit	KE-9	382355
LDR-16	Small O-Ring *2 Required*	621-11	183608
	Large O-Ring	621-036	908030
	Enclosing Tube Gasket **(Wolverine)**	14000-1	380103
OLDR-16	Small O-Ring *2 Required*	621-11	183608
	Large O-Ring	621-036	908030
	Enclosing Tube Kit	KE-6	382435
LDR-20/XTO	Body Flange Gasket	938-1	183710
	Enclosing Tube Parts Kit (Prior to 3-99)	KE-OBS/OE9	381404
	Enclosing Tube Gasket (3-99 to Present) **(Wolverine)**	14000-2	380104
OLDR-20	Body Flange Gasket	938-1	183710
	Enclosing Tube Kit	KE-9	382355
DDR-20	Body Flange Gasket **(Wolverine)**	2539-000	183604
	Enclosing Tube Kit	KE-9	382355

SORIT-TO-CDS CONVERSION KITS

Product	Replacement Parts Needed	Description P/N	Item Number
SORIT-12-to-CDS	Seal Gasket	2645-000	183675
SORIT-15-to-CDS	O-Ring	621-129	183693
SORIT-20-to-CDS	Gasket	2539-000	183604

CDS VALVES

Product	Replacement Parts Needed	Description P/N	Item Number
CDS(T)-4	Gasket **(Wolverine)**	14000-3	380100
CDS(T)-16	O-Ring	621-127	908077
CDS(T)-17	Gasket **(Wolverine)**	22010-000	908078

SPORLAN AUXILARY SIDE CONNECTORS

For use with all refrigerants

Auxiliary Side Connectors

ASC-4-3, ASC-5-4, ASC-7-4, ASC-9-5, ASC-11-7, and ASC-13-9

For proper distributor type, order by complete Sporlan type listed below. E.g., an 1126 distributor requires an ASC-11-7 Auxiliary Side Connector. **Do not use an ASC that is smaller or larger than recommended. Bushing up or down at the outlet defeats the purpose of the internal nozzle tube extension. Do not use an ASC on distributors with permanent nozzles.**

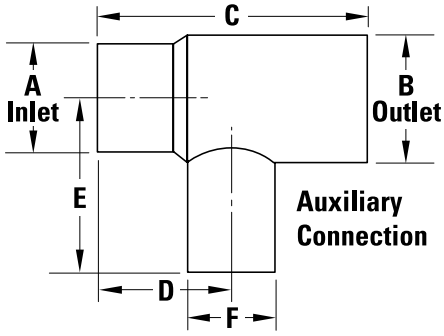

TYPE	CONNECTION SIZES - Inches			USED WITH DISTRIBUTOR TYPE	NOZZLE SIZE	DIMENSIONS Inches					
	INLET ODM SOLDER	OUTLET ODF SOLDER	AUXILIARY ODF SOLDER			A (ODM)	B (ODF)	C	D	E	F (ODF)
ASC-4-3	1/2	1/2	3/8	D260, D262	L	1/2	1/2	1.75	0.85	1.04	3/8
ASC-5-4	5/8	5/8	1/2	1620, 1622	J	5/8	5/8	1.88	0.95	1.25	1/2
ASC-7-4	7/8	7/8	1/2	1112, 1113	G	7/8	7/8	2.25	1.06	1.38	1/2
ASC-9-5	1-1/8	1-1/8	5/8	1115, 1116	E	1-1/8	1-1/8	2.81	1.47	1.62	5/8
ASC-11-7	1-3/8	1-3/8	7/8	1117, 1126, 1128	C	1-3/8	1-3/8	3.53	1.89	2.19	7/8
ASC-13-9	1-5/8	1-5/8	1-1/8	1125, 1127, 1143	A	1-5/8	1-5/8	3.72	1.83	2.75	1-1/8



Ordering Instructions

Distributors must be ordered with the complete designation: model, number and size of circuits, orifice size, and number and size of the side connection (1650 series only). Example, 1651-2-1/4-2 with one 3/8" OD side connection. The ASC designation is specified as shown above to match with the appropriate distributor. Do not attempt to use an ASC that is smaller or larger than recommended. Bushing up or down at the outlet will defeat the purpose of the internal nozzle tube extension.

Whe sizing distributors the circuit tube length is also required.

Important

When adding an ASC to the solder type distributor, the nozzle must be moved from the distributor to the ASC. When the ASC-H-7 and ASC-M-9 are used the ER or CR nozzle replaces the conventional nozzle.

For additional information see Sporlan Distributor Bulletin 20-10

LIQUID LINE RATINGS AND SELECTION RECOMMENDATIONS

TYPE	③SURFACE FILTERING AREA Square Inches	②RATINGS AT ARI STANDARD CONDITIONS														SELECTION RECOMMENDATIONS (Tons)				
		WATER CAPACITY – DROPS										①REFRIGERANT FLOW CAPACITY Tons at 1 psi ΔP				REFRIGERATION			AIR CONDITIONING	
		R-22 60 PPM		R-134a 50 PPM		R-404A & 507 50 PPM		R-507C 50 PPM		R-410A 50 PPM						COMMERCIAL & LOW TEMPERATURE EQUIPMENT			FIELD REPLACEMENT or FIELD BUILT UP SYSTEMS	
		75°F	125°F	75°F	125°F	75°F	125°F	75°F	125°F	75°F	125°F	22 & 410A	134a	404A & 507	407C	12 & 134a	22	404A, 502 &507	12 & 134a	22, 407C & 410A
SEALED TYPE																				
C-032																				
C-032-CAP																				
C-032-S												1.5	1.3	1.0	1.3					
C-032-F	9	61	50	67	48	71	58	52	17	27	20					1/4	1/4	1/4	1/2	1/2
C-032-FM																				
C-033												3.5	3.2	2.3	3.2					
C-033-S												3.8	3.5	2.6	3.5					
C-052																				
C-052-S																				
C-052-F												2.1	1.9	1.4	1.9					
C-052-FM	15	146	119	158	114	169	138	123	40	63	48					1/3	1/3	1/3	3/4 thru 1	3/4 thru 2
C-0525-S												3.4	3.1	2.3	3.1					
C-053												4.1	3.8	2.7	3.8					
C-053-S												4.7	4.3	3.1	4.3					
C-082												2.1	1.9	1.4	1.9					
C-082-S																				
C-0825-S												3.7	3.3	2.4	3.3					
C-083	21	240	196	261	188	279	227	202	65	104	78	4.5	4.2	3.0	4.2	1/2 thru 1-1/2	1/2 thru 1-1/2	1/2 thru 1	3/4 thru 2	1 thru 2
C-083-S												5.2	4.7	3.4	4.7					
C-084												8.7	7.9	5.9	8.0					
C-084-S												9.6	8.8	6.4	8.8					
C-162												2.1	1.9	1.4	1.9					
C-162-S																				
C-1625-S												3.7	3.3	2.4	3.3					
C-163												4.5	4.2	3.0	4.2					
C-163-S	33	346	297	396	285	424	345	307	100	158	119	5.2	4.7	3.4	4.7	1 thru 2	1-1/2 thru 3	3/4 thru 2	1 thru 5	1-1/2 thru 5
C-164												10.1	9.3	6.8	9.3					
C-164-S												11.0	10.1	7.3	10.1					
C-165												12.0	11.0	8.2	11.1					
C-165-S												13.8	12.6	9.2	12.7					
C-303												4.6	4.2	3.0	4.2					
C-303-S												5.3	4.7	3.4	4.7					
C-304												10.1	9.3	6.8	9.3					
C-304-S	53	696	567	756	545	809	658	586	189	302	227	11.0	10.1	7.3	10.1	3 thru 5	3 thru 5	2 thru 5	3 thru 7-1/2	4 thru 10
C-305												14.9	13.6	9.9	13.7					
C-305-S												16.9	15.5	11.3	15.5					
C-307-S												21.6	19.8	14.4	19.9					
C-414												11.5	10.5	7.6	10.5					
C-414-S												12.4	11.4	8.3	11.4					
C-415	67	936	713	1017	733	1088	885	788	254	407	305	15.8	14.5	10.6	14.6	5 thru 10	5 thru 12	5 thru 10	5 thru 12	7-1/2 thru 15
C-415-S												17.5	16.1	11.8	16.2					
C-417-S												22.1	20.3	14.8	20.4					
C-419-S												24.3	22.3	16.3	22.4					
C-607-S	106	1392	1134	1512	1090	1618	1316	1172	378	604	454	29.1	26.6	19.5	26.8	15	15	10	15	20
C-609-S												33.2	30.4	22.3	30.7					

① Based on 86°F liquid line temperature and a refrigerant flow of 3.1 pounds per minute per ton of Refrigerant 134a; 2.9 pounds per minute per ton of Refrigerant 22; 3.9 pounds per minute per ton for Refrigerant 404A; 2.9 pounds per minute per ton for Refrigerant 407C; 2.8 pounds per minute per ton for Refrigerant 410A and 4.1 pounds per minute per ton for Refrigerant 507. Ratings in accordance to ARI Standard 710.

② 20 drops = 1 gram = 1 cc.

③ The filtration area is equal to the core surface area plus the large internal surface available for depth filtration.

Notes: R-12 water capacity values are approximately 15 percent greater than R-134a. R-502 water capacities are similar to R-404A and R-507.

The variation in flow ratings of filter-driers having the same size core and shell is caused by the difference in connection sizes used.

For complete capacity and selection information see your Sporlan Wholesaler, our website at www.sporlan.com, or write Sporlan and request Bulletin 40-10.

LIQUID LINE RATINGS AND SELECTION RECOMMENDATIONS

TYPE	③SURFACE FILTERING AREA Square Inches	②RATINGS AT ARI STANDARD CONDITIONS														SELECTION RECOMMENDATIONS (Tons)					
		WATER CAPACITY – DROPS										①REFRIGERANT FLOW CAPACITY Tons at 1 psi ΔP				REFRIGERATION			AIR CONDITIONING		
		R-22 60 PPM		R-134a 50 PPM		R-404A & 507 50 PPM		R-407C 50 PPM		R-410A 50 PPM						COMMERCIAL & LOW TEMPERATURE EQUIPMENT			FIELD REPLACEMENT or FIELD BUILT UP SYSTEMS		
		75°F	125°F	75°F	125°F	75°F	125°F	75°F	125°F	75°F	125°F	22 & 410A	134a	404A & 507	407C	12 & 134a	22	404A, 502 & 507	12 & 134a	22 & 407C	410A
REPLACEABLE CORE TYPE WITH HIGH WATER CAPACITY CORES (See page 44)																					
C-R424-G	67	902	735	981	706	1049	853	760	245	407	305	11.4	10.4	7.6	10.5	3	5	5	5	5	5
C-R425-G												13.7	12.5	9.1	12.5	5	7-1/2	5	7-1/2	10	10
C-R427-G												18.5	16.9	12.4	17.0						
C-485-G	64	1109	904	1201	868	1290	1049	934	301	481	361	14.6	13.4	9.8	13.5	7-1/2	10	7-1/2	7-1/2	10	10
C-487-G												23.9	21.9	16.0	22.0	12	15	10	12	15	15
C-489-G												43.2	39.5	28.9	39.8				15	20	20
C-967-G	128	2218	1808	2402	1736	2580	2098	1868	602	962	722	39.2	35.9	26.2	36.1	20	25	15	20	25	25
C-969-G												48.7	44.5	32.6	44.8	25	35	25	25	35	35
C-1449-G	192	3327	2712	3603	2604	3870	3147	2802	903	1443	1083	59.2	54.1	39.7	54.6	30	40	30	30	40	40
C-14411-G												67.0	61.3	44.8	61.7	40	50	35	40	50	50
C-19211-G	256	4436	3616	4804	3472	5160	4196	3736	1204	1924	1444	84.5	77.3	56.3	77.7	50	70	50	50	70	70
C-19213-G												99.0	90.6	66.2	91.1	60	80	55	60	80	80
C-19217-G												104	95.1	69.5	95.7	65	85	60	65	85	85
C-30013-G	294	6786	5532	7375	5310	7890	6417	5716	1844	—	—	112	102	74.5	103	75	100	70	75	100	—
C-40017-G	392	9048	7376	9833	7080	10520	8556	7621	2458	—	—	134	132	96.8	133	110	130	100	110	130	—

TYPE	③SURFACE FILTERING AREA Square Inches	②RATINGS AT ARI STANDARD CONDITIONS									SELECTION RECOMMENDATIONS (Tons)				
		WATER CAPACITY – DROPS						①REFRIGERANT FLOW CAPACITY Tons at 1 psi ΔP			REFRIGERATION			AIR CONDITIONING	
		R-22 60 PPM		R-134a 50 PPM		R-404A & 507 50 PPM					COMMERCIAL & LOW TEMPERATURE EQUIPMENT			FIELD REPLACEMENT or FIELD BUILT UP SYSTEMS	
		75°F	125°F	75°F	125°F	75°F	125°F	22	134a	404A & 507	12 & 134a	22	404A, 502 &507	12 & 134a	22
REPLACEABLE CORE TYPE WITH STANDARD CORES (See page 44)															
C-485-G	64	347	288	583	473	408	309	14.6	13.4	9.8	7-1/2	10	7-1/2	7-1/2	10
C-487-G								23.9	21.9	16.0	12	15	10	12	15
C-489-G								43.2	39.5	28.9		15	10	15	20
C-967-G	128	694	576	1166	946	816	618	39.2	35.9	26.2	20	25	15	20	25
C-969-G								48.7	44.5	32.6	25	35	25	25	35
C-1449-G	192	1041	864	1749	1419	1224	927	59.2	54.1	39.7	30	40	30	30	40
C-14411-G								67.0	61.3	44.8	40	50	35	40	50
C-19211-G	256	1388	1152	2332	1892	1632	1236	84.5	77.3	56.3	50	70	50	50	70
C-19213-G								99.0	90.6	66.2	60	80	55	60	80
C-19217-G								104	95.1	69.5	65	85	60	65	85
C-30013-G	294	2670	1878	3912	3009	2631	1992	112	102	74.5	75	100	70	75	100
C-40017-G	392	3560	2504	5216	4012	3508	2652	134	132	96.8	110	130	100	110	130

① Based on 86°F liquid line temperature and a refrigerant flow of 3.1 pounds per minute per ton of Refrigerant 134a; 2.9 pounds per minute per ton of Refrigerant 22; 3.9 pounds per minute per ton for Refrigerant 404A; 2.9 pounds per minute per ton for Refrigerant 407C; 2.8 pounds per minute per ton for Refrigerant 410A and 4.1 pounds per minute per ton for Refrigerant 507. Ratings in accordance to ARI Standard 710.

② 20 drops = 1 gram = 1 cc.

③ The filtration area is equal to the core surface area plus the large internal surface available for depth filtration.

Notes: R-12 water capacity values are approximately 15 percent greater than R-134a. R-502 water capacities are similar to R-404A and R-507.

The variation in flow ratings of filter-driers having the same size core and shell is caused by the difference in connection sizes used.

For complete capacity and selection information see your Sporlan Wholesaler, our website at www.sporlan.com, or write Sporlan and request Bulletin 40-10.

LIQUID LINE RATINGS AND SELECTION RECOMMENDATIONS

Selection Instructions

Except for the values in bold (R-22/R-407C/R-410A at 40°F; 8 psi pressure drop), the flow capacities are rated at the maximum recommended pressure drop for **permanent** installation.

To ensure the suction line filter-drier has ample contaminant removal ability, selection must be based on flow capacity and the amount of desiccant required for system clean-up. The suction line filter-drier must be large enough to adequately remove acid, moisture and solid contaminants without causing nuisance plug-ups. Sizing is especially important for sealed type suction line filter-driers since they should be sized to clean a small system with one service call.

To reduce the pressure drop through replaceable core shells, substitute cores with filter elements (see page 44) after the system has been cleaned up. The 6171-5 screen should be discarded when cores are replaced with RPE-48-BD elements in RSF shells.

For complete description of the suggested system clean-up procedure, request Bulletin 40-10.

Suction Line Flow Capacity (Tons) – Sealed Type

	REFRIGERANT	134a			22					404A				407C	410A
	EVAPORATOR TEMPERATURE	40°F	20°F	0°F	40°F	20°F	0°F	-20°F	-40°F	20°F	0°F	-20°F	-40°F	40°F	40°F
	PRESSURE DROP (psi)	2.0	1.5	1.0	3.0	2.0	1.5	1.0	0.5	2.0	1.5	1.0	0.5	3.0	3.0
SEALED TYPE	C-083-S-T-HH	1.3	0.9	0.5	2.1	1.3	0.9	0.5	0.2	1.2	0.8	0.5	0.2	2.0	2.7
	C-084-S-T-HH	1.4	0.9	0.6	2.1	1.3	0.9	0.5	0.3	1.3	0.8	0.5	0.3	2.1	2.7
	C-144-S-T-HH	1.3	0.8	0.5	2.1	1.3	0.9	0.4	0.2	0.9	0.6	0.3	0.2	2.1	2.7
	C-145-S-T-HH	2.1	1.3	0.8	3.4	2.2	1.4	0.8	0.4	1.6	1.0	0.6	0.3	3.4	4.6
	C-146-S-T-HH	2.9	1.8	1.1	4.8	3.0	2.0	1.2	0.6	2.1	1.4	0.9	0.4	4.8	6.2
	C-147-S-T-HH	3.2	2.1	1.3	5.3	3.3	2.2	1.3	0.7	2.4	1.6	0.9	0.5	5.3	6.8
	C-149-S-T-HH	4.2	2.7	1.6	7.0	4.4	2.9	1.7	0.9	3.2	2.1	1.2	0.6	7.0	9.0
	C-164-S-T-HH	1.7	1.1	0.7	2.7	1.7	1.1	0.7	0.3	1.6	1.0	0.6	0.3	2.7	3.6
	C-165-S-T-HH	2.0	1.3	0.8	3.2	2.0	1.3	0.8	0.4	1.9	1.2	0.7	0.4	3.2	4.2
	C-166-S-T-HH	2.6	1.7	1.0	4.0	2.5	1.6	1.0	0.5	2.4	1.6	0.9	0.5	3.9	5.2
	C-167-S-T-HH	2.8	1.8	1.1	4.5	2.8	1.8	1.1	0.5	2.7	1.7	1.0	0.5	4.4	5.9
	C-305-S-T-HH	2.2	1.4	0.8	3.4	2.1	1.4	0.8	0.4	2.0	1.3	0.8	0.4	3.4	4.4
	C-306-S-T-HH	2.8	1.8	1.1	4.4	2.8	1.8	1.1	0.5	2.7	1.7	1.0	0.5	4.4	5.8
	C-307-S-T-HH	3.4	2.2	1.3	5.3	3.3	2.2	1.3	0.6	3.2	2.0	1.2	0.6	5.3	7.0
	C-309-S-T-HH	3.8	2.4	1.5	5.9	3.7	2.4	1.5	0.7	3.6	2.3	1.4	0.7	5.8	7.7
	C-417-S-T-HH	3.8	2.5	1.5	6.0	3.8	2.5	1.5	0.7	3.6	2.3	1.4	0.7	6.0	7.9
	C-419-S-T-HH	4.0	2.6	1.6	6.2	3.9	2.5	1.5	0.8	3.7	2.4	1.5	0.7	6.1	8.0
	C-437-S-T-HH	5.1	3.3	2.1	8.0	5.0	3.3	2.0	1.0	4.8	3.1	1.9	0.9	7.9	10.4
	C-439-S-T-HH	6.4	4.2	2.5	10.0	6.3	4.1	2.5	1.2	6.0	3.9	2.4	1.2	9.9	13.1
	C-4311-S-T-HH	7.1	4.6	2.8	11.1	6.9	4.6	2.7	1.4	6.7	4.3	2.6	1.3	10.9	14.4
	C-4313-S-T-HH	7.8	5.1	3.1	12.2	7.6	5.0	3.0	1.5	7.3	4.7	2.9	1.4	12.0	15.9
	C-607-S-T-HH	4.2	2.7	1.7	6.7	4.2	2.7	1.6	0.8	4.0	2.6	1.6	0.8	6.6	8.7
	C-609-S-T-HH	4.8	3.1	1.9	7.5	4.7	3.1	1.8	0.9	4.5	2.9	1.8	0.9	7.4	9.8

Suction Line Flow Capacity (Tons) – Shells With Replaceable Cores

	REFRIGERANT	134a			22						404A & 507				407C		410A	
	EVAPORATOR TEMPERATURE	40°F	20°F	0°F	40°F		20°F	0°F	-20°F	-40°F	20°F	0°F	-20°F	-40°F	40°F		40°F	
	PRESSURE DROP (psi)	2.0	1.5	1.0	3.0	8.0*	2.0	1.5	1.0	0.5	2.0	1.5	1.0	0.5	3.0	8.0*	3.0	8.0*
REPLACEABLE CORE TYPE	RSF-487-T	6.4	4.2	2.5	10.1	**17.5**	6.3	4.1	2.5	1.2	6.1	4.0	2.3	1.2	10.0	**17.3**	12.6	**21.9**
	RSF-489-T	7.8	5.1	3.1	12.2	**21.1**	7.6	5.0	3.0	1.5	7.3	4.8	2.8	1.4	12.0	**20.7**	15.3	**26.4**
	RSF-4811-T	9.4	6.2	3.7	14.8	**25.6**	9.3	6.1	3.6	1.8	8.9	5.8	3.4	1.7	14.6	**25.3**	18.5	**32.0**
	RSF-4813-T	10.1	6.7	4.0	15.9	**27.5**	10.0	6.5	3.9	1.9	9.6	6.2	3.6	1.8	15.7	**27.2**	19.9	**34.4**
	RSF-4817-T	11.0	7.2	4.4	17.2	**29.8**	10.8	7.1	4.2	2.1	10.4	6.8	3.9	2.0	17.0	**29.4**	21.5	**37.3**
	RSF-4821-T	11.9	7.8	4.7	18.6	**32.2**	11.6	7.6	4.6	2.3	11.2	7.3	4.3	2.2	18.4	**31.6**	23.3	**40.3**
	RSF-9611-T	14.5	10.5	6.7	23.8	**39.0**	15.9	11.1	7.1	3.9	14.4	9.8	6.2	3.3	22.9	**37.6**	29.8	**48.8**
	RSF-9613-T	15.2	13.0	8.1	29.7	**49.0**	19.8	13.7	8.7	4.7	17.9	12.2	7.6	4.0	28.6	**47.2**	37.1	**61.3**
	RSF-9617-T	16.1	13.0	8.1	29.7	**49.0**	19.8	13.7	8.7	4.7	17.9	12.2	7.6	4.0	28.6	**47.2**	37.1	**61.3**
	RSF-9621-T	18.7	13.0	8.1	29.7	**50.7**	19.8	13.7	8.7	4.7	17.9	12.2	7.6	4.0	28.9	**49.8**	37.1	**61.3**
	RSF-9625-T	19.2	13.0	8.1	30.0	**51.9**	20.0	13.7	8.7	4.7	17.9	12.2	7.6	4.0	29.7	**51.0**	37.5	**63.4**
	C-30013-G	16.9	11.0	6.7	26.6	**46.0**	16.7	10.9	6.5	3.2	16.0	10.3	6.2	3.1	26.3	**42.8**	33.3	**64.9**
	C-30017-G	17.2	11.1	6.8	27.0	**46.7**	16.9	11.1	6.6	3.3	16.2	10.4	6.3	3.1	26.7	**43.3**	33.8	**58.4**
	C-40017-G	21.0	13.6	8.3	32.9	**56.9**	20.6	13.5	8.1	4.0	19.8	12.8	7.2	3.8	32.4	**52.8**	41.1	**71.1**
	C-40021-G thru C-40033-G	21.0	13.6	8.3	32.9	**56.9**	20.6	13.5	8.1	4.0	19.8	12.8	7.2	3.8	32.4	**52.8**	41.1	**71.1**

*Denotes TEMPORARY INSTALLATION. Cores for system clean-up; RPE-48-BD or RPE-100 Filter Elements should be installed after clean-up.
Rated in accordance with ARI Standard 730.

CATCH-ALL FILTER-DRIERS

SPORLAN

Significance of the Type Number

The letters and numerals in the Catch-All® type number each have a significance. The "C" indicates Catch-All. The **FIRST TWO OR THREE DIGITS** indicate cubic inches of desiccant. The **LAST ONE OR TWO DIGITS** indicate fitting size in eighths of an inch. For sealed models, a **"-S"** following the last digit indicates solder fittings, and **NO LETTER** indicates a flare fitting. Replaceable core models (C-420 and larger) only have solder connections and the "-S" is omitted. Examples are: C-083 is 8 cu. in. and 3/8" flare, C-309-S is 30 cu. in. and 1-1/8" solder, C-19213-G is 192 cu. in. and 1-5/8" solder.

Other suffix letters indicate special qualities. For example:

"-T" indicates a pressure tap consisting of a Schrader type access valve on the inlet end of the Catch-All.

"-HH" indicates a charcoal style core for wax removal and clean-up after a hermetic motor burnout.

"-F" indicates a female flare outlet fitting with a male flare inlet fitting.

"-FM" indicates a female flare inlet fitting with a male flare outlet fitting.

"-CAP" indicates a Catch-All particularly designed for installation on capillary tube systems.

Replaceable Cores and Pleated Filter Elements – Order Separately

Cores for replaceable core type filter-driers are molded of exactly the same desiccants that are used in the popular sealed filter-driers.

Cores are individually packed in ***metal cans***, fully activated and hermetically sealed against moisture and dirt.

Filter Elements are dried and packed in individual sealed metal cans. This method of packaging prevents the element from picking up moisture from the atmosphere.

Detailed ***instructions*** are printed on each can. Each can contains a ***"triple gasket"*** consisting of a new end plate gasket, an end plate gasket for certain competitive filter-driers and a core gasket where desired. See the specifications on page 40 for the number of cores required for each type drier.

RCW-42 – High Water Capacity Core – Order as separate item – Fits ONLY shell type C-R424, C-R425 and C-R427. **Designed specially for use with POE oils.** This core should be used on systems that have a ruptured water cooled condenser, or that have been exposed to the atmosphere, or for some reason have a high amount of moisture in the system.

RC-4864 – Activated Core – Order as separate item – Fits types C-480 thru C-19200 Series shells and Replaceable Suction Filter (RSF) shells. This is the standard core suitable for most installations in the liquid or suction line applications.

RCW-48 – High Water Capacity Core – Order as separate item – Fits types C-480 thru C-19200 Series shells and Replaceable Suction Filter (RSF) shells. **Designed specially for use with POE oils.** This core should be used on systems that have a ruptured water cooled condenser, or that have been exposed to the atmosphere, or for some reason have a high amount of moisture in the system.



RC-4864-HH – Activated Charcoal Core – Order as separate item – Fits types C-480 thru C-19200 Series shells and Replaceable Suction Filter (RSF) shells. This core should be used for wax removal on low temperature systems, and for clean-up of systems that have had a hermetic motor burnout.

RPE-48-BD – Filter Element – Order as separate item – Fits types C-480 thru C-19200 Series shells and **Replaceable Suction Filter (RSF) shells.** This element should be used in RSF shells installed in the **suction line** to obtain the lowest possible pressure drop. In cleaning up a system after a hermetic motor burnout, cores should be used first. Then after the system is thoroughly clean, this filter element can be installed in the RSF shell.

RC-10098 – Activated Core – Order as separate item – Fits types C-30000 and C-40000 Series shells. This core has a high water capacity and should be used on all standard liquid and suction line applications.

RCW-100 – High Water Capacity Core – Order as separate item – Fits types C-30000 and C-40000 Series shells. **Designed specially for use with POE oils.** This core should be used on systems that have a ruptured water cooled condenser, or that have been exposed to the atmosphere, or for some reason have a high amount of moisture in the system.

RC-10098-HH – Activated Charcoal Core – Order as separate item – Fits types C-30000 and C-40000 Series shells. This core should be used for wax removal on low temperature systems, and for clean-up of systems that have had a hermetic motor burnout.

RPE-100 – Filter Element – Order as separate item – Fits types C-30000 and C40000 Series shells. This filter element should be used in the suction line to obtain the lowest possible pressure drop after cores were used for system clean-up.

HH Style Catch-All for Wax Removal

Small amounts of wax are often a problem on **low temperature systems.** Even well engineered systems frequently contain minute quantities of wax which are sufficient to clog expansion valve screens or cause sticking of the valve. Sporlan has developed a special blend of desiccants including activated charcoal which removes small amounts of wax in the liquid line before this wax can cause trouble at the expansion valve. These Catch-All Filter-Driers have been very successful in correcting trouble jobs in the field.

Select an HH Style Catch-All Filter-Drier if wax problems occur on low temperature systems. In addition to their wax removal ability, these filter-driers will remove all of the other harmful contaminants that the standard filter-driers remove. Listed in the table are various Catch-All models that incorporate the HH style core.

TYPE	CONNECTIONS Inches	TYPE	CONNECTIONS Inches
C-052-HH	1/4 SAE Flare	C-303-HH	3/8 SAE Flare
C-082-HH	1/4 SAE Flare	C-304-HH	1/2 SAE Flare
C-083-HH	3/8 SAE Flare	C-304-S-HH	1/2 ODF Solder
C-162-HH	1/4 SAE Flare	C-305-HH	5/8 SAE Flare
C-163-HH	3/8 SAE Flare	C-305-S-HH	5/8 ODF Solder
C-163-S-HH	3/8 ODF Solder	C-414-HH	1/2 SAE Flare
C-164-HH	1/2 SAE Flare	C-415-HH	5/8 SAE Flare
C-164-S-HH	1/2 ODF Solder	C-417-S-HH	7/8 ODF Solder
C-165-HH	5/8 SAE Flare	RC-4864-HH	Replaceable Core
C-165-S-HH	5/8 ODF Solder	RC-10098-HH	

For dimensions, refer to the specifications for standard filter-driers or consult Bulletin 40-10.

CATCH-ALL FILTER-DRIERS

SPORLAN

Design Features

- New product line-up with enhanced flow capacities deliver system protection solutions for today's system sizes.
- Filter-drier operates in either flow direction with low pressure drop.
- Rugged metal check valve designed for maximum flow capacity.
- Sporlan dependable molded core used for maximum filtration ability. When flow reverses, dirt already collected remains in the filter-drier.
- Carefully engineered desiccant formulations for new system and system clean-up for all commercially available HCFC and HFC refrigerant/lubricant combinations.

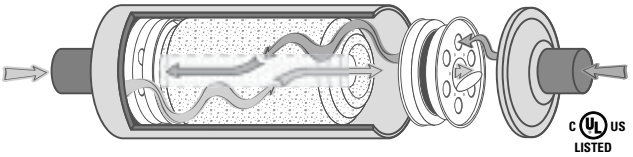

- HPC-160 and HPC-300 Series offer the largest core sizes available in the industry for these filter-drier types. A larger molded core provides superior performance, and is especially advantageous for R-410A/POE lubricant systems.
- Catch-All® shells are epoxy powder coated to prevent corrosion even in the most adverse conditions.
- Shells listed by Underwriters' Laboratories for 650 psig for R-410A systems.

Specifications – For New Installations

TYPE NUMBER	CONNECTION SIZE Inches	SELECTION RECOMMEND. Tons	DIMENSIONS		SPECIFICATIONS										
			OVERALL LENGTH Inches	DIA. Inches	FLOW CAPACITY Tons @ 1 psi ΔP		WATER CAPACITY						LIQUID CAPACITY Ounces (wt.) @ 100°F		
							R-22 Drops at 60 ppm		R-407C Drops at 50 ppm		R-410A Drops at 50 ppm				
					R-22 & R-410A	R-407C	75°F	125°F	75°F	125°F	75°F	125°F	R-22	R-407C	R-410A
HPC-082	1/4 SAE Flare	1 – 3	5.78	3.0	2.2	2.0	194	158	163	53	85	63	9.2	8.1	8.0
HPC-082-S	1/4 ODF Solder		5.32												
HPC-083	3/8 SAE Flare		6.22		3.7	3.4									
HPC-083-S	3/8 ODF Solder		5.46												
HPC-084	1/2 SAE Flare		6.48		4.1	3.8									
HPC-084-S	1/2 ODF Solder		5.58												
HPC-103	3/8 SAE Flare	1 – 5	6.75	3.0	5.0	4.6	215	176	181	80	94	70	12.2	10.7	10.6
HPC-103-S	3/8 ODF Solder		5.88		5.5	5.1									
HPC-104	1/2 SAE Flare		6.94		8.3	7.6									
HPC-104-S	1/2 ODF Solder		6.00		8.9	8.2									
HPC-105	5/8 SAE Flare		7.25		10.2	9.4									
HPC-105-S	5/8 ODF Solder		6.31		10.8	9.9									
HPC-163	3/8 SAE Flare	1 – 8	7.78	3.0	5.0	4.6	364	297	307	100	158	119	14.5	12.7	12.6
HPC-163-S	3/8 ODF Solder		6.92		5.5	5.1									
HPC-164	1/2 SAE Flare		7.95		8.3	7.6									
HPC-164-S	1/2 ODF Solder		7.07		8.9	8.2									
HPC-165	5/8 SAE Flare		8.28		10.2	9.4									
HPC-165-S	5/8 ODF Solder		7.35		10.8	9.9									
HPC-304	1/2 SAE Flare	8 – 20	11.08	3.0	8.7	8.0	696	567	586	189	302	227	19.7	17.3	17.2
HPC-304-S	1/2 ODF Solder		10.18		9.3	8.6									
HPC-305	5/8 SAE Flare		11.38		9.9	9.1									
HPC-305-3	5/8 ODF Solder		10.42		10.5	9.7									
HPC-306-S	3/4 ODF Solder		10.86		11.0	10.1									
HPC-307-S	7/8 ODF Solder		11.02		11.4	10.5									

Specifications – For Clean-Up After Burnout

TYPE NUMBER	CONNECTION SIZE Inches	SELECTION RECOMMEND. Tons	DIMENSIONS		SPECIFICATIONS										
			OVERALL LENGTH Inches	DIA. Inches	FLOW CAPACITY Tons @ 1 psi ΔP		WATER CAPACITY						LIQUID CAPACITY Ounces (wt.) @ 100°F		
							R-22 Drops at 60 ppm		R-407C Drops at 50 ppm		R-410A Drops at 50 ppm				
					R-22 & R-410A	R-407C	75°F	125°F	75°F	125°F	75°F	125°F	R-22	R-407C	R-410A
HPC-163-HH	3/8 SAE Flare	1 – 8	7.78	3.0	4.8	4.4	93	81	90	88	60	52	14.5	12.7	12.6
HPC-163-S-HH	3/8 ODF Solder		6.92		5.2	4.8									
HPC-164-HH	1/2 SAE Flare		7.95		7.9	7.3									
HPC-164-S-HH	1/2 ODF Solder		7.07		8.5	7.8									
HPC-165-HH	5/8 SAE Flare		8.28		9.7	8.9									
HPC-165-S-HH	5/8 ODF Solder		7.35		10.3	9.5									
HPC-304-HH	1/2 SAE Flare	8 – 20	11.08	3.0	8.3	7.6	167	119	161	88	120	104	19.7	17.3	17.2
HPC-304-S-HH	1/2 ODF Solder		10.18		8.8	8.1									
HPC-305-HH	5/8 SAE Flare		11.38		9.4	8.6									
HPC-305-S-HH	5/8 ODF Solder		10.42		10.8	9.2									
HPC-307-S-HH	7/8 ODF Solder		11.02		10.8	9.9									

HPC-100 Series – Core volume is 10 cubic inches. Core surface filtering area is 18 sq. inches. Maximum rated pressure is 650 psig.
HPC-160 Series – Core volume is 14 cubic inches. Core surface filtering area is 26 sq. inches. Maximum rated pressure is 650 psig.
HPC-300 Series – Core volume is 30 cubic inches. Core filtering area is 53 sq. inches. Maximum rated pressure is 650 psig.
UL and UL_C Listed – Guide-SMGT-File No. SA-1756A & B.

For complete information see your Sporlan Wholesaler, our website at www.sporlan.com, or write Sporlan and request Bulletin 40-10.

CATCH-ALL FILTER-DRIERS

SPORLAN

Type C-144-S-TT-HH through C-149-S-TT-HH

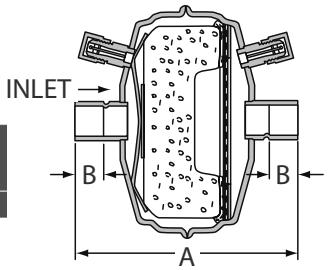

PROVEN BENEFITS:

- **Short overall length**, suitable for cramped piping situations — shorter than other similar type filter-driers.
- Suitable for use on **1 through 5 ton air conditioning systems**, with suction line sizes in the range of 1/29 to 1-1/89. Also applicable on the common suction line of heat pump systems.
- **The famous Sporlan HH core** removes all types of contaminants including moisture, acid, dirt, and sludge. A blend of two desiccants, plus activated charcoal, gives maximum performance.
- **Access valves** permit measuring the pressure drop across the filter-drier during clean-up, following a hermetic motor burnout.

Specifications

TYPE	CONNECTION SIZE Inches ODF Solder	OVERALL LENGTH "A"		SOLDER SOCKET DEPTH "B"		DIAMETER OF BODY		SHIPPING WEIGHT	
		Inches	mm	Inches	mm	Inches	mm	lb	kg
C-144-S-TT-HH	1/2	4.14	105	.50	13	4.44	113	2.0	0.9
C-145-S-TT-HH	5/8	4.38	111	.62	16				
C-146-S-TT-HH	3/4	4.83	123	.69	18				
C-147-S-TT-HH	7/8	4.97	126	.75	19				
C-149-S-TT-HH	1-1/8	4.93	125	.96	24				

Volume of desiccant is 14 cubic inches (229 cm³). Filtering area is 27 square inches (174 cm²).
$_{c}$UL$_{us}$ Recognized Component — Guide-SMGT2-File No. SA-1756.

APPLICATION

The short overall length of these filter-driers permit easy installation, even on systems with restricted space. While designed for the minimum possible overall length, these filter-driers are suitable for use on most air conditioning systems. The filter-drier has two access valves for measuring the pressure drop across the filter-drier core during the clean-up process.

Heat pump systems frequently have cramped piping in the very compact cabinet. The C-140 Series Catch-All is not a reversible filter-drier, therefore it must be installed in the common suction line. The service technician needs a short suction line filter-drier to fit in this restricted space. The C-140 Series Catch-All meets this essential need.

CONSTRUCTION

The core is held in place by a leaf spring at the inlet end. Filtration occurs on the core surface, and a 100 mesh screen is used as a safety filter at the outlet end. The screen and core are sealed to the shell wall with a fiberglass pad. The threaded valve core for each access valve is supplied in a separate envelope. This way the heat sensitive valve core can be installed after brazing the Catch-All into the line. The Catch-All utilizes copper connections for ease in brazing with any type of alloy.

While designed for use in the suction line these filter-driers may be installed in the liquid line, if desired under unusual circumstances. The performance of these filter-driers in the liquid line is similar to the popular C-160 Series Catch-All Filter-Driers.

Part #	LIST
C-144-S-TT-HH-SPO	
C-145-S-TT-HH-SPO	$197.80
C-146-S-TT-HH-SPO	$194.70
C-147-S-TT-HH-SPO	$197.40
C-149-S-TT-HH-SPO	$229.90

Flow Capacity*

Tons ▪ °F ▪ psi

TYPE	REFRIGERANT																	
	134a			22					407A				407C	407F				410A
	EVAPORATOR TEMPERATURE °F																	
	0	20	40	-40	-20	0	20	40	-40	-20	0	20	40	-40	-20	0	20	40
	PRESSURE DROP – psi																	
	1	1-1/2	2	1/2	1	1-1/2	2	3	1/2	1	1-1/2	2	3	1/2	1	1-1/2	2	3
C-144-S-TT-HH	0.5	0.8	1.3	0.2	0.4	0.9	1.3	2.2	0.2	0.4	0.9	1.2	2.1	0.2	0.4	0.9	1.4	2.7
C-145-S-TT-HH	0.8	1.3	2.1	0.4	0.8	1.4	2.2	3.6	0.4	0.8	1.3	2.1	3.5	0.4	0.9	1.5	2.3	4.6
C-146-S-TT-HH	1.1	1.8	2.9	0.6	1.2	2.0	3.0	4.9	0.6	1.2	1.9	3.0	4.8	0.6	1.3	2.1	3.2	6.2
C-147-S-TT-HH	1.3	2.1	3.2	0.7	1.3	2.2	3.3	5.4	0.7	1.3	2.1	3.2	5.3	0.7	1.4	2.3	3.5	6.8
C-149-S-TT-HH	1.6	2.7	4.2	0.9	1.7	2.9	4.4	7.1	0.8	1.7	2.8	4.3	7.0	0.9	1.9	3.1	4.7	9.0

Flow Capacity*

kW ▪ °C ▪ bar

TYPE	REFRIGERANT																	
	134a			22					407A				407C	407F				410A
	EVAPORATOR TEMPERATURE °C																	
	-20	-5	0	-40	-30	-20	-5	5	-40	-30	-15	-5	5	-40	-30	-15	-5	5
	PRESSURE DROP – bar																	
	0.07	0.10	0.14	0.03	0.07	0.10	0.14	0.21	0.03	0.07	0.10	0.14	0.21	0.03	0.07	0.10	0.14	0.21
C-144-S-TT-HH	1.8	2.8	4.6	0.7	1.4	3.2	4.6	7.7	0.7	1.4	3.0	4.4	7.4	0.8	1.5	3.3	4.9	9.5
C-145-S-TT-HH	2.8	4.6	7.4	1.4	2.8	4.9	7.7	12.6	1.3	2.8	4.7	7.4	12.3	1.5	3.1	5.2	8.0	16.1
C-146-S-TT-HH	3.9	6.3	10.2	2.1	4.2	7.0	10.5	17.2	2.0	4.1	6.8	10.4	16.8	2.2	4.5	7.4	11.2	21.8
C-147-S-TT-HH	4.6	7.4	11.2	2.5	4.6	7.7	11.6	19.0	2.3	4.6	7.5	11.4	18.6	2.5	5.0	8.2	12.4	23.9
C-149-S-TT-HH	5.6	9.5	14.7	3.2	6.0	10.2	15.4	24.9	3.0	5.9	9.9	15.1	24.6	3.3	6.6	10.8	16.4	31.6

Rated in accordance with ANSI/AHRI Standard 730.

**The water capacity and acid capacity of the C-140 Series are comparable to the popular C-160-S-T-HH Series Filter-Drier. Specific values are not listed since the industry has no standard method for testing the water capacity or acid removal ability in the suction line of refrigerant systems. The flow capacity information above permits selecting C-140 Series Catch-Alls for various conditions with confidence.*

SUCTION FILTER
SPORLAN

With the exclusive Bi-directional feature



SELECTION RECOMMENDATIONS

TYPE NUMBER		CONNEC-TIONS Inches	* FLOW CAPACITY IN **TONS** EVAPORATOR TEMPERATURE																	NOMINAL SYSTEM **HORSEPOWER**	
			40°F				20°F				0°F				– 20°F			– 40°F			
			PRESSURE DROP																		
WITHOUT Access Valve	WITH Access Valve		2		3		1-1/2		2		1		1-1/2		1/2	1		1/2			
			REFRIGERANT																	REFRIGERANT	
			12	134a	22	407C	12	134a	22	404A	12	134a	22	404A	12	22	404A	22	404A	22 407C	12, 134a, 404A, 502, 507
SF-114	–	1/2 ODF	1.3	1.5	2.4	2.4	0.9	1.0	1.5	1.5	0.6	0.6	1.1	1.0	0.3	0.7	0.6	0.3	0.3	1	1/2
SF-114F	–	1/2 SAE	1.2	1.3	2.1	2.1	0.8	0.9	1.4	1.3	0.5	0.5	0.9	0.9	0.3	0.6	0.5	0.3	0.3	1	1/2
SF-115	–	5/8 ODF	2.3	2.6	4.1	4.1	1.6	1.7	2.7	2.6	1.0	1.1	1.8	1.7	0.5	1.2	1.1	0.6	0.6	2	1
SF-115-F	–	5/8 SAE	2.1	2.3	3.7	3.7	1.4	1.5	2.4	2.3	0.9	0.9	1.6	1.5	0.5	1.0	0.9	0.5	0.5	2	1
SF-283F	–	3/8 SAE	1.1	1.2	2.1	2.0	0.7	0.8	1.3	1.2	0.4	0.5	0.9	0.8	0.3	0.4	0.5	0.3	0.3	1	1/2
–	SF-285-T	5/8 ODF	3.5	4.0	6.4	6.2	2.5	2.7	4.0	3.9	1.6	1.7	2.9	2.7	0.9	1.8	1.7	1.0	0.9	4	1-1/2
–	SF-286-T	3/4 ODF	4.3	5.1	8.6	8.1	3.1	3.4	5.0	5.1	2.0	2.1	3.6	3.4	1.1	2.2	2.1	1.2	1.1	5	1-1/2
–	SF-287-T	7/8 ODF	6.3	7.0	11.1	11.3	4.4	4.6	7.2	7.0	2.7	2.8	5.1	4.6	1.4	3.1	2.9	1.5	1.5	7-1/2	3
–	SF-289-T	1-1/8 ODF	8.2	9.2	14.8	14.6	5.7	6.0	9.4	9.2	3.5	3.7	6.6	6.1	1.8	4.0	3.8	2.1	2.0	7-1/2	5
–	SF-489-T	1-1/8 ODF	8.7	9.9	16.0	15.7	6.1	6.5	10.0	9.8	3.7	3.9	7.0	6.5	1.9	4.3	4.1	2.2	2.1	10	5
–	SF-4811-T	1-3/8 ODF	9.9	11.2	18.4	18.0	6.8	7.3	11.4	11.2	4.2	4.4	7.9	7.4	2.2	4.8	4.6	2.5	2.4	12	5
–	SF-4813-T	1-5/8 ODF	11.7	13.3	21.6	21.3	8.1	8.7	13.5	13.3	4.9	5.2	9.4	8.7	2.6	5.6	5.4	2.9	2.8	15	7
–	SF-6417-T	2-1/8 ODF	46.7	50.9	91.1	88.9	28.7	31.0	56.9	52.6	15.8	16.4	35.4	31.8	7.2	20.3	17.8	9.3	7.9	55	20
–	SF-6421-T	2-5/8 ODF	50.5	62.9	119.0	109.0	36.8	38.6	70.2	64.6	20.2	20.6	44.0	39.4	9.1	25.6	22.3	11.8	10.0	60	30

* Refrigerant 502 flow capacity is 80% of the values shown for Refrigerant 22, when expressed in TONS. When expressed in horsepower, the proper refrigerant selection is the same as for R-12.

Use R-404A flow ratings for R-507. Use R-502 horsepower recommendations for R-402A & B and R-408A. Use R-12 horsepower recommendations for R-401A & B and R-409A. Ratings are in accordance with ARI Standard 730.

SUCTION FILTER – SPECIFICATIONS

TYPE NUMBER		CONNECTIONS Inches	FILTER AREA Square Inches	DIMENSIONS Inches			SHIPPING WEIGHT Lbs.
WITHOUT Access Valve	WITH Access Valve			OVERALL LENGTH	SOCKET DEPTH	SHELL DIAMETER	
Types WITH bypass relief feature (Bi-directional Flow)							
SF-283-F	–	3/8 SAE	28	8.78	–	3.00	2-1/4
–	**SF-285-T**	5/8 SAE		8.34	0.62		
–	**SF-286-T**	3/4 ODF		8.79	0.69		
–	**SF-287-T**	7/8 ODF		8.93	0.75		
–	**SF-289-T**	1-1/8 ODF		9.51	0.91		
–	**SF-489-T**	1-1/8 ODF	48	12.42	0.91		3
–	**SF-4811-T**	1-3/8 ODF		13.10	0.97		
–	**SF-4813-T**	1-5/8 ODF		13.44	1.09		
Types WITHOUT bypass relief feature (Single Flow Direction)							
SF-114	–	1/2 ODF	11	4.36	0.50	2.00	3/4
SF-114F	–	1/2 SAE		5.25	–		
SF-115	–	5/8 ODF		4.60	0.62		
SF-115F	–	5/8 SAE		5.56	–		
–	**SF-6417-T**	2-1/8 ODF	388	10.94	1.24	4.75	7-1/2
–	**SF-6421-T**	2-5/8 ODF		10.94	1.38		

REPLACEABLE SUCTION FILTER

SPORLAN



Sporlan replaceable suction filters are installed in the suction line of refrigeration or air conditioning systems to remove contaminants that may be in the system at startup.

SELECTION RECOMMENDATIONS for TEMPORARY APPLICATION for CLEAN-UP AFTER BURNOUT
Select on the basis of cores used temporarily for clean-up, followed by filter elements used permanently

TYPE	CONNECTIONS Inches ODF Solder	NUMBER OF CORES OR FILTER ELEMENTS	MAXIMUM SYSTEM CAPACITY IN HORSEPOWER														LIST
			AIR CONDITIONING				COMMERCIAL					LOW TEMPERATURE					
			REFRIGERANT														
			12	134a	22	407C	12	134a	22	502	404A	12	134a	22	502	404A	
RSF-487-T	7/8	1	9	13	20	17	9	10	17	14	15	6	8	14	10	11	$704.00
RSF-489-T	1-1/8		10	16	20	20	11	12	18	14	16	6	10	16	10	11	$1,001.00
RSF-4811-T	1-3/8		12	19	25	25	13	15	20	18	18	7	12	20	12	13	$1,038.00
RSF-4813-T	1-5/8		16	20	25	25	14	16	24	19	22	9	13	21	15	17	$1,093.00
RSF-4817-T	2-1/8		17	22	30	30	15	17	24	21	22	10	14	23	15	17	$1,229.00
RSF-4821-T	2-5/8		19	24	30	30	16	19	27	22	24	10	15	25	15	17	$1,159.00
RSF-9617-T	2-1/8	2	25	32	40	40	21	25	37	32	34	12	20	34	22	24	$1,536.00
RSF-9621-T	2-5/8		29	38	50	50	25	30	40	35	37	15	24	39	28	31	$1,769.00
RSF-9625-T	3-1/8		30	38	50	50	25	30	40	35	37	15	24	40	28	31	$2,138.00

Use R-404A ratings for R-507. Use R-502 ratings for R-402A & B and R-408A. Use R-12 ratings for R-401A & B and R-409A.
NOTE: The above ratings are made on the basis of the maximum recommended pressure drop (for temporary installation) shown in the table at the bottom of this page.

SPORLAN
248-336

SPORLAN - R-410A



RSF-4817-T

The Replaceable Suction Filter shell, used with RPE-48-BD pleated filter element, is designed to be installed in the suction line of new systems to remove circulating contaminants.

Design Benefits

- **High flow capacity**
- **Corrosion resistant coating on shell**
- **Can be used with desiccant cores for clean-up after burnout**
- **Various fitting sizes up to 3-1/8" line size**
- **Access valve supplied for pressure drop measurement or charging**

How It's Used

Sporlan Replaceable Suction Filters are installed in the suction line of refrigeration or air conditioning systems to remove contaminants that may be in the system at startup.

The Replaceable Suction Filter has large fittings permitting the use of a small shell on a system with large line sizes, resulting in considerable economy. The angle construction is suitable of flow in either direction, which results in easy installation even on compact racks.

The Replaceable Suction Filters should be used with cores for cleaning up a system after a hermetic motor burnout. Select the RC-4864, RC-4864-HH or RCW-48 replaceable cores. After cleanup, install RPE-48-BD elements in the shells.

Flow Capacity - Tons ▪ psi ▪ °F

TYPE	CONNECTIONS Inches ODF SOLDER	FLOW CAPACITY EVAPORATOR TEMPERATURE 40°F PRESSURE DROP – psi			NUMBER OF FILTER ELEMENTS	FILTER AREA Square Inches	OVERALL LENGTH Inches
		1	2	3			
RSF-487-T	7/8	8.0	11.3	13.8	One RPE-48-BD	388	9.30
RSF-489-T	1-1/8	12.7	18.0	22			9.37
RSF-4811-T	1-3/8	18.5	26.1	32			9.60
RSF-4813-T	1-5/8	23.7	33.5	41			9.60
RSF-4817-T	2-1/8	31.8	44.9	55			9.37
RSF-4821-T	2-5/8	41.6	58.8	72			9.75
RSF-9611-T	1-3/8	20.8	29.4	36	Two RPE-48-BD	776	15.14
RSF-9613-T	1-5/8	27.1	38.4	47			15.14
RSF-9617-T	2-1/8	34.1	48.2	59			14.96
RSF-9621-T	2-5/8	46.8	66.1	81			15.43
RSF-9625-T	3-1/8	64.1	90.6	111			15.12

Listed by Underwriters' Laboratories, Inc. Guide SMGT File No. SA-1756A & B. RSF shells have a 500 psig (34.5 bar) M.R.P. rating.

Note: Ratings are in accordance with ARI Standards 730. Flow capacity (tons/kW) with cores is approximately 40% of the above values.

For complete information request Bulletin 80-10.

Catch-ALL Accessories

MOUNTING BRACKETS

Order Separately

Mounting Brackets designed especially for **replaceable core type Catch-All Filter-Driers and RSF shells** are available. All brackets are supplied with a bolt, nut, and washer.

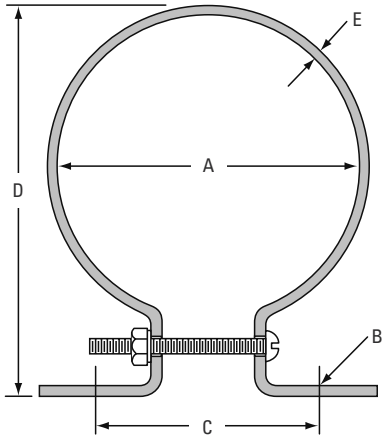

A-685

Mounting Bracket for shell types C-480 thru C-19200 Series and RSF shells. **ONE** bracket per package. Depending on shell size and installation requirements, more than one bracket may be required. Catch-Alls larger than the C-480 and RSF-480 Series shells generally require two brackets.

A-175-1

Mounting Bracket for shell types C-R424-G, C-R425-G, and C-R427-G ONLY. **ONE** bracket per package. Usually one bracket is adequate for mounting these Catch-Alls.

A-175-2

Mounting Bracket for shell types C-30000 and C-40000 Series. **TWO** brackets per package. Two brackets are generally adequate for mounting these large Catch-Alls.

Mounting Bracket Dimensions

MODEL NUMBER	DIMENSIONS									
	A		B		C		D		E	
	Inches	mm	Inches	mm	Inches	mm	Inches	mm	Inches	mm
A-685	4.75	121	.41 x .81 Slot	10 x 21 Slot	3.50	89	6.12	155	0.12	3.0
A-175-1	3.50	89			3.50	89	4.62	117	0.12	3.0
A-174-2	6.00	152			4.00	102	7.44	189	0.12	3.0

JP-232 CAP TUBE ADAPTER

To simplify the application of **Catch-All Filter-Driers** on systems with cap tubes, Sporlan has designed a brass adapter that fits all standard 1/4" ODF solder fittings. This adapter can be used with the C-032-S, C-052-S, and C-082-S models. As shown in the illustration, one end of the adapter is suitable for 0.125" OD tubing and the other is suitable for cap tubes of .087", .090", or .093" OD. This adapter **CANNOT** be used with the C-032-CAP or C-032-CAP-T Catch-Alls.

The adapter can be brazed to the capillary tubing and the unit fitting in one operation. These adapters are available from all Sporlan wholesalers. Request **part number: JP-0232-000.**

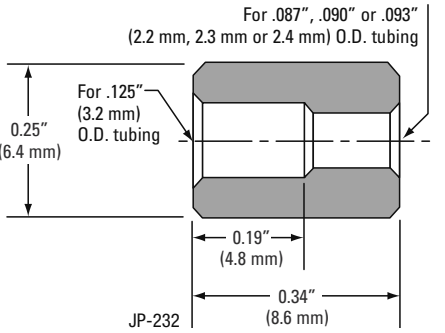

CATCH-ALL FILTER-DRIERS

SPORLAN

New Filter-Drier for Improved System Reliability

Catch-All Filter-Drier Type CSG



Advantages:

Combines the Catch-All's® proven system protection with the See-All's® easy to read system monitoring capability, providing superior protection while reducing installation cost and time.

- Combined unit replaces 2 field-braze joints with factory-tested leak-free design.
- Reduces installation materials, specifically copper connecting tube and braze material.
- Reduces installation time and cost.
- Minimizes the potential for leaks and decreases nuisance call-backs.

Part #	Description	LIST
CSG-083S	Sight Glass & Drier	$178.30
CSG-084-S	Sight Glass & Drier	$204.60
CSG-163S	Sight Glass & Drier	$202.60

Flush-All SFD-163S Filter-Drier

The patented Flush-All SFD-163S filter-drier offers three levels of filtration, efficiently capturing particles disturbed during purging procedure and system maintenance. The core provides necessary water and acid removal, then a unique 20 micron filter media bonded to the core optimizes the solid contaminant holding capacity, while a low micron fibrous outlet pad completes the filtration process. The three stage filtration achieves best in the industry filtration characteristics.

Also available in Kits, the Flush-All SFD-163S filter-drier coupled with the powerful Flush-All chemical solvent for a unique total solution for system conversions or compressor burnouts.

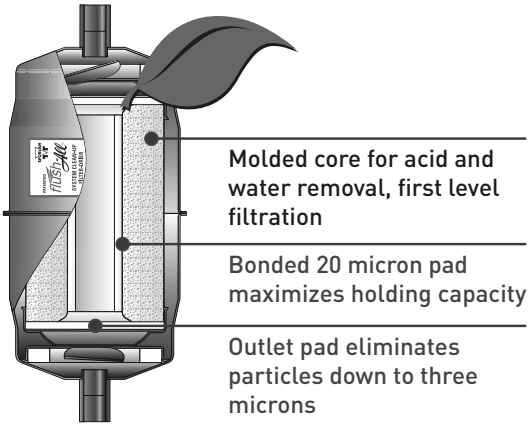

CATALOG NO.	ITEM NO.	PRODUCT DESCRIPTION
SFD-163-S	**409992**	**SFD-163-S Filter-Drier**
FAKIT1-S	475477	Flush-All 1 lb. Starter System Clean-up Kit. Includes FA-1 Canister, SFD-163S Filter-Drier, FA-V Canister Valve, and FA-G Gun/Hose Assembly
FAKIT1	475467	Flush-All 1 lb. System Clean-up Kit. Includes FA-1 Canister and SFD-163S Filter-Drier
FAKIT2-S	475459	Flush-All 2 lb. Starter System Clean-up Kit. Includes FA-2 Canister, SFD-163S Filter-Drier, FA-V Canister Valve, and FA-G Gun/Hose Assembly
FAKIT2	475478	Flush-All 2 lb. System Clean-up Kit. Includes FA-2 Canister and SFD-163S Filter-Drier

For refrigeration, air conditioning and heat pump systems up to 8 tons!

CATCH-ALL FILTER-DRIERS

SPORLAN

Catch-All Filter-Drier Type C-052-CAP-TT-HH

Filter-Drier for Cap Tube Systems

Catch-All® Filter-Drier
Type C-052-CAP-TT-HH



Problem

Capillary tubes clog with **waxy, resin** materials and solid debris in small refrigerating systems. This reduces the system capacity and efficiency, requiring capillary tubing replacement.

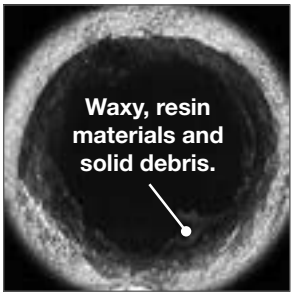

Cause

Waxy, resin materials deposit in the capillary tubing and attract/hold solid debris that reduces the flow area of the capillary tube.

Superior 3 stage filtration virtually *eliminates* plugged cap tubes.

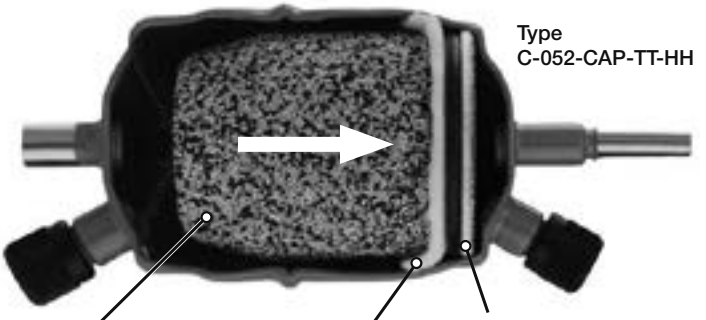

Stage 1
Porous molded Catch-All HH Core filters the vast majority of particles.

Stage 2
10 micron filter to capture all but the finest particles.

Stage 3
1 micron final filter to capture remaining particles.

Solution

- Porous, molded **Catch-All HH Core** contains the ideal desiccant blend to capture those resins and waxes, eliminating the “sticky” material before it deposits in the capillary tube.
- Uses “3 stage filtration” to capture even the smallest particles of solid debris while maintaining low pressure loss.
- Eliminates nuisance call-backs and increases customer satisfaction.
- Dual pressure taps allow easy pressure drop monitoring during cleanup.

Catch-All Filter-Drier Type C-052-CAP-TT-HH

Installation Savings Example

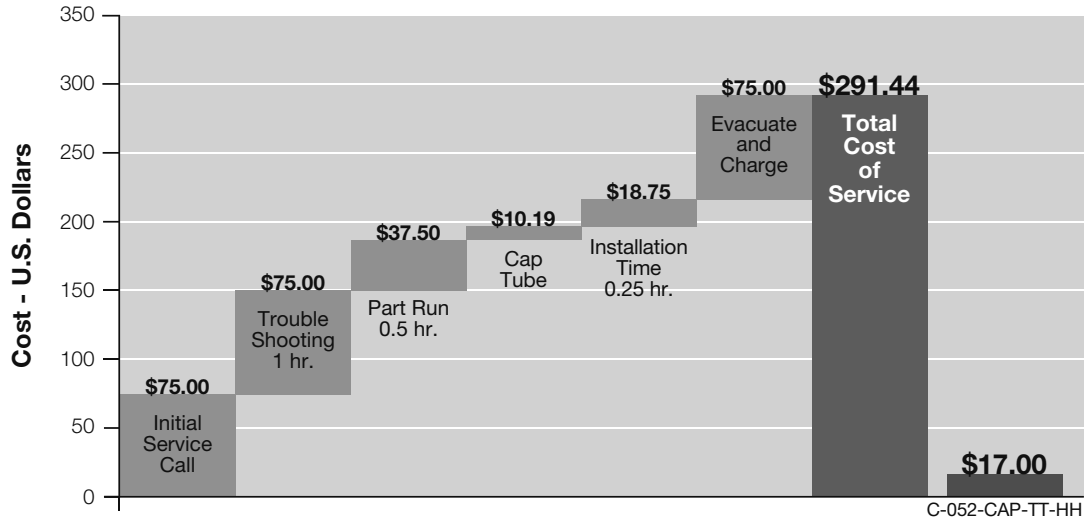

Labor and Materials to Service a Plugged Capillary Tube vs. Investment in a Sporlan Type C-052-CAP-TT-HH Filter-Drier

A service call resulting from a plugged cap tube can be costly and frustrating for a customer. Eliminate the reoccurring costs associated with the plugging of capillary tubes and increase customer savings and satisfaction with the installation of a Sporlan Type C-052-CAP-TT-HH Catch-All Filter-Drier.

Sporlan Type C-052-CAP-TT-HH Catch-All Filter-Drier, the only filter-drier for cap tube systems.

Specifications

Model	Item Number	Volume of Desiccant Cubic Inches	Inlet Connection	Outlet Connection	Overall Length Inches (mm)	Diameter of Body Inches (mm)
C-052-CAP-TT-HH	400219	5	1/4" ODF	Capillary Tube	5.71 (145)	2.44 (65)

⚠WARNING – USER RESPONSIBILITY

Failure or improper selection or improper use of the products described herein or related items can cause death, personal injury and property damage.

This document and other information from Parker Hannifin Corporation, its subsidiaries and authorized distributors provide product or system options for further investigation by users having technical expertise.

The user, through its own analysis and testing, is solely responsible for making the final selection of the system and components and assuring that all performance, endurance, maintenance, safety and warning requirements of the application are met. The user must analyze all aspects of the application, follow applicable industry standards, and follow the information concerning the product in the current product catalog and in any other materials provided from Parker or its subsidiaries or authorized distributors.

To the extent that Parker or its subsidiaries or authorized distributors provide component or system options based upon data or specifications provided by the user, the user is responsible for determining that such data and specifications are suitable and sufficient for all applications and reasonably foreseeable uses of the components or systems.

For safety information see the Safety Guide at www.parker.com/safety or call 1-800-CParker.

OFFER OF SALE
The items described in this document are hereby offered for sale by Parker Hannifin Corporation, its subsidiaries or its authorized distributors. This offer and its acceptance are governed by the provisions stated in the detailed "Offer of Sale" available at www.parker.com.

SEE-ALL MOISTURE & LIQUID INDICATOR

SPORLAN

Compatible with Refrigerants 12, 22, 134a, 404A, 407C, 502, 507, 410A


SA-12FM


SA-14U


SA-13UU


SA-13FU


SA-14SU


SA-17S


SA-217

Specifications - Inches

Listed by Underwriters' Laboratories, Inc. – Guide SEYW – File No. SA3182

CONNECTION SIZES Inches	MALE FLARE		FEMALE & MALE FLARE		MALE FLARE x SWIVEL NUT		SWIVEL NUT x SWIVEL NUT		FEMALE FLARE x SWIVEL NUT		SWIVEL NUT x ODF SOLDER		ODF SOLDER	
	TYPE NO.	LIST	TYPE NO.	LIST	TYPE NO.	LIST	TYPE NO.	LIST	TYPE NO.	LIST	TYPE NO.	LIST	TYPE NO.	LIST
1/4	**SA-12**	$79.60	**SA-12FM**	$78.40	—		—		—		—		**SA-12S**	$75.80
3/8	**SA-13**	$77.10	**SA-13FM**	$79.50	**SA-13U**	$108.30	**SA-13UU**	$119.20	**SA-13FU**	$114.80	**SA-13SU**	$114.80	**SA-13S**	$77.10
1/2	**SA-14**	$96.10	**SA-14FM**	$95.60	**SA-14U**	$133.60	**SA-14UU**	$143.80	**SA-14FU**	$137.50	**SA-14SU**	$137.50	**SA-14S**	$94.20
5/8	**SA-15**	$99.40	—		**SA-15U**	$130.40	**SA-15UU**	$159.40	—		**SA-15SU**	$138.20	**SA-15S**	$97.40
7/8	—		—		—		—		—		—		**SA-17S**	$143.80
1-1/8	—		—		—		—		—		—		**SA-19S**	$156.20
1-3/8	—		—		—		—		—		—		① **SA-211**	$308.00
1-5/8	—		—		—		—		—		—		① **SA-213**	$372.00
2-1/8	—		—		—		—		—		—		① **SA-217**	$445.00

Moisture Content PPM

SEE•ALL SHOWS	R-410A LIQUID LINE TEMPERATURE	
	75°F	24°C
Green DRY	Below 75	
Chartreuse CAUTION	75-150	
Yellow WET	Above 150	

Note: Change or add Catch-All Filter-Drier when paper turns from green to chartreuse.

Maximum Rated Pressure for all models is 650 psig (44.8 bar). Overall width is: 1.31" (33.3 mm) for 1/4" and 3/8" sizes. 1.58" (40.1 mm) for 1/2" and 5/8 sizes, and 1.38" (35.1 mm) for 7/8" and 1-1/8" sizes. Most solder connections can be used as male fittings as well as female fittings. The 1/4" ODF is 3/8" ODM, the 3/8" ODF is 1/2" ODM, the 1/2" ODF is 5/8" ODM, and the 5/8" ODF is 3/4" ODM. Models with female flare and/or swivel nut connections are supplied with a copper gasket in the fitting.

① These models have copper connections and feature a removable element cartridge – for replacement cartridge specify AC-20.

SOLENOID VALVES

SPORLAN

Series A3, E3, E5, B6, E6, B9, E9, B10 and E10

R22, 134a, 401A, 402A, 404A, 407C, 502, 507

** Models with "HP" are rated for High Pressure Gases i.e. R410A*

VALVE SERIES	TYPE	STANDARD CONNECTIONS Inches	PORT SIZE Inches	MOPD psi		NOMINAL LIQUID CAPACITIES Tons of Refrigeration								COIL RATINGS
						REFRIGERANTS								
						22	134a	401A	402A	404A	407C	502	507	
						Pressure Drop – psi								
				AC	DC	3	2	2	3	3	3	3	3	STANDARD VOLTS/CYCLES
A3	A3P1	3/8 NPT Female	.101	300	175	1.6	1.2	1.3	1.1	1.1	1.5	1.0	1.0	MKC-1 24/50-60 120/50-60 208-240/50-60 120-208-240/50-60
	A3S1	3/8 ODF - 1/2 ODM												
	A3F1	1/4 SAE Flare												
E3	E3S120	1/4 ODF X 1/4 ODF												
	E3S130	3/8 ODF X 3/8 ODF												
E5	E5S120	1/4 ODF X 1/4 ODF	.150	300	175	2.8	2.1	2.3	1.9	1.9	2.6	1.8	1.8	
	E5S130HP	3/8 ODF X 3/8 ODF												
B6	B6P1	3/8 NPT Female	3/16	300	175	4.9	3.8	4.1	3.3	3.3	4.5	3.2	3.2	
	MB6P1													
	B6S1	3/8 ODF - 1/2 ODM & 1/2 ODF - 5/8 ODM												
	MB6S1													
	B6F1	3/8 SAE Flare												
	MB6F1													
E6	E6S130HP	3/8 ODF X 3/8 ODF												
	ME6S130HP													
	E6S140HP	1/2 ODF X 1/2 ODF												
	ME6S140HP													
B9	B9P2	3/8 NPT Female	9/32	300	250	8.1	6.2	6.6	5.3	5.4	7.4	5.2	5.2	MKC-2 OMKC-2 24/50-60 120/50-60 208-240/50-60 120-208-240/50-60
	MB9P2			275										
	OB9P2													
	B9S2	1/2 ODF - 5/8 ODM		300	250									
	MB9S2			275										
	OB9S2													
	B9F2	3/8 SAE Flare		300	250									
	MB9F2			275										
	OB9F2													
E9	E9S230	3/8 ODF X 3/8 ODF		300	250									
	ME9S230													
	OE9S230			275										
	E9S240HP	1/2 ODF X 1/2 ODF		300	250									
	ME9S240HP													
	OE9S240			275										
	E9S250HP	5/8 ODF X 5/8 ODF		300	250									
	ME9S250HP													
	OE9S250			275										
B10	B10S2	5/8 ODF - 3/4 ODM	5/16	300	250	11.1	8.5	9.1	7.3	7.3	10.2	7.2	7.2	
	MB10S2													
	OB10S2			275										
	B10F2	1/2 SAE Flare		300	250									
	MB10F2													
	OB10F2			275										
E10	E10S240HP	1/2 ODF X 1/2 ODF		300	250									
	ME10S240HP													
	OE10S240			275										
	E10S250HP	5/8 ODF X 5/8 ODF		300	250									
	ME10S250HP													
	OE10S250			275										

Maximum rated pressure 500 psi.



Type E3S130
or E5S130



Type B6S1



Type E6S130



Type MB9S2
Normally Closed



Type E9S240
Normally Closed



Type MB10S2
Normally Closed



Type E10S250
Normally Closed

SOLENOID VALVES

SPORLAN

Series B14, E14, B19, E19, B25 and E25

R22, 134a, 401A, 402A, 404A, 407C, 502, 507

** Models with "HP" are rated for High Pressure Gases i.e. R410A*

VALVE SERIES	TYPE	STANDARD CONNECTIONS Inches	PORT SIZE Inches	MOPD psi		NOMINAL LIQUID CAPACITIES Tons of Refrigeration								COIL RATINGS
						REFRIGERANTS								
						22	134a	401A	402A	404A	407C	502	507	
						Pressure Drop – psi								
				AC	DC	3	2	2	3	3	3	3	3	STANDARD VOLTS/CYCLES
B14	B14P2	1/2 NPT Female	7/16	300	250	15.8	12.0	12.9	10.4	10.4	14.5	10.2	10.2	MKC-2 OMKC-2 24/50-60 120/50-60 208-240/50-60 120-208-240/50-60
	MB14P2													
	OB14P2			275										
	B14S2	5/8 ODF - 7/8 ODM		300	250									
	MB14S2													
	OB14S2			275										
E14	E14S250HP	5/8 ODF X 5/8 ODF		300	250									
	ME14S250HP													
	OE14S250			275										
B19	B19P2	3/4 NPT Female	19/32	300	250	24.2	18.4	19.8	16.0	16.0	22.3	15.7	15.7	
	MB19P2													
	OB19P2			275										
	B19S2	7/8 ODF - 1-1/8 ODM		300	250									
	MB19S2													
	OB19S2			275										
E19	E19S250HP	5/8 ODF X 5/8 ODF		300	250									
	ME19S250HP													
	OE19S250			275										
	E19S270HP	7/8 ODF X 7/8 ODF		300	250									
	ME19S270HP													
	OE19S270			275										
B25	B25P2	1 NPT Female	25/32	300	250	41.4	31.5	33.8	27.3	27.4	38.0	26.8	26.8	
	MB25P2													
	OB25P2			275										
	B25S2	1-1/8 ODF Solder		300	250									
	MB25S2													
	OB25S2			275										
E25	E25S270HP	7/8 ODF X 7/8 ODF		300	250									
	ME25S270HP													
	OE25S270			275										
	E25S290HP	1-1/8 ODF X 1-1/8 ODF		300	250									
	ME25S290HP													
	OE25S290			275										

Maximum rated pressure 500 psi.

Available with conduit boss or junction box at no extra charge.



Type E14S250
Normally Closed



Type MB14S2
Normally Closed



Type E19S250
Normally Closed



Type MB19S2
Normally Closed



Type MB25S2
Normally Closed



Type E25S290
Normally Closed

Series E35 and E42

R22, 134a, 401A, 402A, 404A, 407C, 502, 507

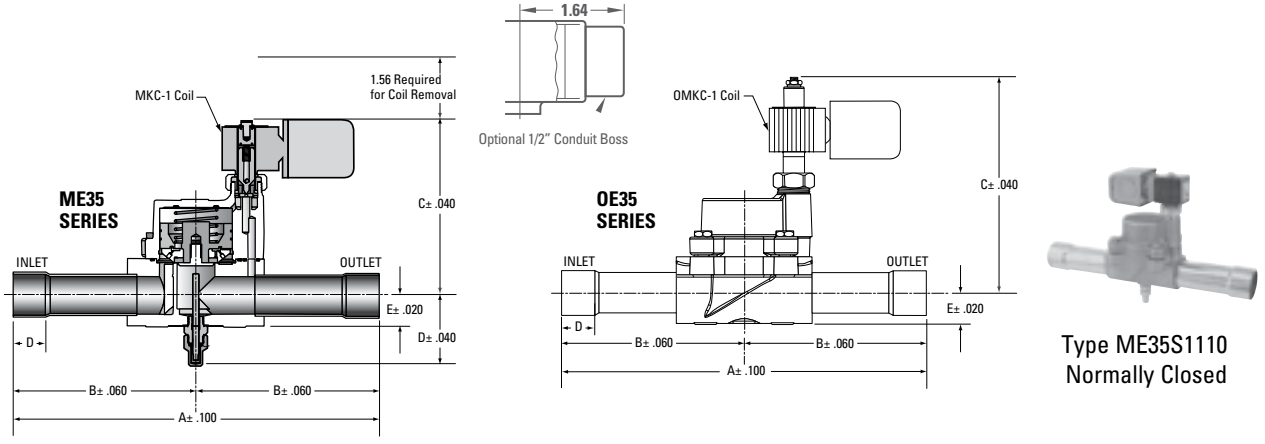

Type ME35S1110
Normally Closed

VALVE SERIES	TYPE	CONNECTIONS Inches Sizes shown in BLUE will be furnished unless otherwise specified.	PORT SIZE Inches	MOPD psi		NOMINAL LIQUID CAPACITIES Tons of Refrigeration								COIL RATINGS		
						REFRIGERANTS										
						22	134a	401A	402A	404A	407C	502	507			
						Pressure Drop – psi										
				AC	DC	3	2	2	3	3	3	3	3	STANDARD VOLTS/CYCLES	WATTS AC	WATTS DC
E35	E35S190	1-1/8 ODF X 1-1/8 ODF	1	300	250	70.9	53.0	56.9	46.6	46.5	64.8	46.0	45.6	24/50-60 120/50-60 208-240/50-60 120-208-240/50-60	10	15
	ME35S190															
	OE35S190			300												
	E35S1110	W 1-3/8 ODF X 1-3/8 ODF		300	250											
	ME35S1110															
	OE35S1110			300												

- Maximum rated pressure: Type E35 Series, 500 psi
- Dual voltage 4-wire coils, 120-208-240/50-60 are available at slight additional cost. For other voltages and cycles, consult Sporlan, Washington, MO 63090.
- Available with conduit boss or junction box at no extra charge.
- For capacity at other pressure drops, see Pages 4 and 5.

VALVE SERIES	TYPE	STANDARD CONNECTIONS Inches	PORT SIZE Inches	MOPD psi		NOMINAL LIQUID CAPACITIES Tons of Refrigeration								COIL RATINGS
						REFRIGERANTS								
						22	134a	401A	402A	404A	407C	502	507	
						Pressure Drop – psi								
				AC	DC	3	2	2	3	3	3	3	3	STANDARD VOLTS/CYCLES
E42	E42S2130	1-5/8 ODF X 1-5/8 ODF	1-5/16	300	250	127	96.9	104	83.9	84.2	117	82.5	82.4	MKC-2 OMKC-2 24/50-60 120/50-60 208-240/50-60 120-208-240/50-60
	ME42S2130													
	OE42S2130			275										
	E42S2170	2-1/8 ODF X 2-1/8 ODF		300	250									
	ME42S2170													
	OE42S2170			275										

- Maximum rated pressure 300 psi.

SOLENOID VALVES
SPORLAN

Series E43
R22, 134a, 401A, 402A, 404A, 407C, 407F, 410A, 507

VALVE SERIES	TYPE	STANDARD CONNECTION Inches	PORT SIZE Inches	MOPD psi (bar)		NOMINAL LIQUID CAPACITIES Tons (kW) of Refrigerant								STANDARD COIL RATINGS		
						REFRIGERANTS										
						22	134a	401A	402A	404A	407C	407F	410A	507		
						Pressure Drop – psi (bar)									VOLTS/CYCLES	WATTS
				AC	DC	3 (0.20)	2 (0.14)	2 (0.14)	3 (0.20)	3 (0.20)	3 (0.20)	3 (0.20)	5 (0.34)	3 (0.20)		AC / DC
E43	E43S1130	1-5/8 ODF x 1-5/8 ODF	1-5/16	300 (21)	250 (17)	127 (447)	96.9 (340)	104 (365)	83.9 (295)	84.2 (296)	117 (411)	121 (425)	NA	82.4 (290)	24/50-60 120/50-60 208/50-60 208-240/50-60 120-208-240/50-60	10 / 15
	ME43S1130															
	E43S1170	2-1/8 ODF x 2-1/8 ODF														
	ME43S1170															
E43-HP	E43S1130-HP	1-5/8 ODF x 1-5/8 ODF		450 (31)	400 (27)	127 (447)	96.9 (340)	104 (365)	83.9 (295)	84.2 (296)	117 (411)	121 (425)	156 (548)	82.4 (290)		
	ME43S1130-HP															
	OE43S1130-HP			400 (27)												
	E43S1170-HP	2-1/8 ODF x 2-1/8 ODF		450 (31)												
	ME43S1170-HP															
	OE43S1170-HP			400 (27)												

Maximum rated pressure (MRP) is 500 psig (34 bar) for E43 non R-410A series and 680 psig (47 bar) for E43-HP, R-410A series.
Dual voltage 4-wire coils, 120-208-240/50-60 are available at slight additional cost. For other voltages and cycles, consult Sporlan, Washington, MO 63090.
Coils are available with conduit boss or junction box.
Manual Lift Stem is not available with Normally Open Valves.
For OE43-HP Series Valves: When using 208 volts, do not operate 208-240 volt coil at 85% voltage and hot coil. If so, MOPD may be lower than stated in this bulletin. Use OMKC-1 208/50-60 coil.

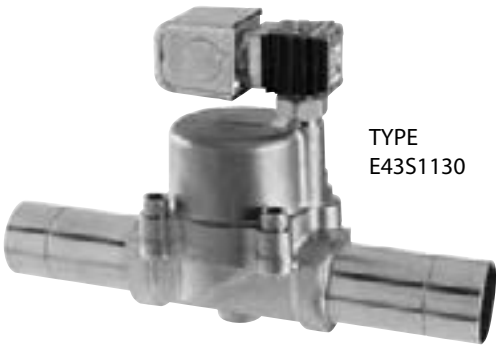

TYPE
E43S1130

Type	LIST
E43S1130	$4,132.00
ME43S1130	$3,412.00
E43S1170	-
ME43S1170	$3,914.00
ME35S1110	$2,010.00
E43S1130-HP	$4,132.00
ME43S1130-HP	$3,412.00
OE43S1130-HP	$3,596.00
E43S1170-HP	$3,706.00
ME43S1170-HP	-
OE43S1170-HP	$3,706.00

Liquid Capacity Selection Table R22, 134a, 401A, 402A

** Models with "HP" are rated for High Pressure Gases i.e. R410A*

TYPE NUMBER						CONNECTIONS Inches	PORT SIZE Inches	TONS OF REFRIGERATION																				
"A" and "B" Series Valves			"E" Series Extended Connections					22					134a					401A					402A					
Without Manual Lift Stem		With Manual Lift Stem	Without Manual Lift Stem		With Manual Lift Stem			PRESSURE DROP — psi*																				
Normally Closed	Normally Open	Normally Closed	Normally Closed	Normally Open	Normally Closed			1	2	3	4	5	1	2	3	4	5	1	2	3	4	5	1	2	3	4	5
A3P1	---	---	---	---	---	3/8 NPT Female	.101	0.9	1.3	**1.6**	1.9	2.1	0.8	**1.2**	1.5	1.8	2.0	0.9	**1.3**	1.6	1.9	2.1	0.6	0.9	**1.1**	1.2	1.4
A3F1	---	---	---	---	---	1/4 SAE Flare																					
A3S1	---	---	E3S120	---	---	1/4 ODF Solder																					
	---	---	E3S130	---	---	3/8 ODF Solder																					
---	---	---	E5S120	---	---	1/4 ODF Solder	.150	1.6	2.3	**2.8**	3.3	3.6	1.5	**2.1**	2.6	3.0	3.4	1.6	**2.3**	2.8	3.3	3.7	1.1	1.5	**1.9**	2.1	2.4
---	---	---	E5S130HP	---	---	3/8 ODF Solder																					
B6P1	---	MB6P1	---	---	---	3/8 NPT Female	3/16	2.9	4.0	**4.9**	5.7	6.4	2.7	**3.8**	4.6	5.3	5.9	2.9	**4.1**	4.9	5.7	6.4	1.9	2.7	**3.3**	3.8	4.2
B6F1	---	MB6F1	---	---	---	3/8 SAE Flare																					
B6S1	---	MB6S1	E6S130HP	---	ME6S130HP	3/8 ODF Solder																					
	---		E6S140HP	---	ME6S140HP	1/2 ODF Solder																					
B9P2	OB9P2	MB9P2	---	---	---	3/8 NPT Female	9/32	4.7	6.6	**8.1**	9.3	10.4	4.4	**6.2**	7.5	8.7	9.7	4.7	**6.6**	8.1	9.3	10.4	3.1	4.4	**5.3**	6.2	6.9
B9F2	OB9F2	MB9F2	---	---	---	3/8 SAE Flare																					
---	---	---	E9S230	OE9S230	ME9S230	3/8 ODF Solder																					
B9S2	OB9S2	MB9S2	E9S240HP	OE9S240	ME9S240HP	1/2 ODF Solder																					
B10F2	OB10F2	MB10F2	---	---	---	1/2 SAE Flare	5/16	6.4	9.1	**11.1**	12.8	14.3	6.0	**8.5**	10.4	12.0	13.4	6.4	**9.1**	11.1	12.8	14.4	4.2	6.0	**7.3**	8.5	9.4
---	---	---	E10S240HP	OE10S240	ME10S240HP	1/2 ODF Solder																					
B10S2	OB10S2	MB10S2	E10S250HP	OE10S250	ME10S250HP	5/8 ODF Solder																					
B14P2	OB14P2	MB14P2	---	---	---	1/2 NPT Female	7/16	9.1	12.9	**15.8**	18.2	20.3	8.5	**12.0**	14.7	17.0	18.9	9.1	**12.9**	15.8	18.2	20.4	6.0	8.5	**10.4**	12.0	13.4
B14S2	OB14S2	MB14S2	E14S250HP	OE14S250	ME14S250HP	5/8 ODF Solder																					
B19S2	OB19S2	MB19S2	E19S250HP	OE19S250	ME19S250HP	5/8 ODF Solder	19/32	13.9	19.8	**24.2**	28.0	31.4	13.0	**18.4**	22.6	26.1	29.2	14.0	**19.8**	24.3	28.1	31.4	9.2	13.0	**16.0**	18.5	20.7
B19P2	OB19P2	MB19P2	---	---	---	3/4 NPT Female																					
B19S2	OB19S2	MB19S2	E19S270HP	OE19S270	ME19S270HP	7/8 ODF Solder																					
B25P2	OB25P2	MB25P2	---	---	---	1 NPT Female	25/32	23.8	33.8	**41.4**	47.8	53.5	22.2	**31.5**	38.6	44.6	49.9	23.9	**33.8**	41.4	47.9	53.6	15.7	22.2	**27.3**	31.5	35.3
B25S2	OB25S2	MB25S2	E25S270HP	OE25S270	ME25S270HP	7/8 ODF Solder																					
			E25S290HP	OE25S290	ME25S290HP	1-1/8 ODF Solder																					
---	---	---	E35S190	OE35S190	ME35S190	1-1/8 ODF Solder	1	38.9	56.8	**70.9**	83.0	93.7	36.3	**53.0**	66.2	77.4	87.4	39.0	**56.9**	71.0	83.1	93.8	25.6	37.3	**46.6**	54.5	61.5
			E35S1110	OE35S1110	ME35S1110	1-3/8 ODF Solder																					
			E42S2130HP	OE42S2130	ME42S2130	1-5/8 ODF Solder	1-15/16	60.9	82.3	**98.2**	111	123	56.7	**76.7**	91.5	104	114	61.0	**82.5**	98.0	112	123	40.4	54.6	**65.1**	73.8	81.4
			E42S2170	OE42S2170	ME42S2170	2-1/8 ODF Solder																					

*Do not use below 1 psi pressure drop, except Types A3 and E3 valves.
Liquid capacities for Refrigerants 22, 134a, 401A and 402A shown in the above table are based on 40°F evaporating and 100°F liquid case.

REFRIGERANT LIQUID TEMPERATURE CORRECTION FACTORS

Refrigerant Liquid Temperature °F		40	50	60	70	80	90	100	110	120	130	140
R-22	Correction Factor	1.33	1.27	1.22	1.17	1.11	1.06	1.00	0.94	0.89	0.83	0.77
R-134a		1.39	1.33	1.26	1.20	1.13	1.07	1.00	0.93	0.87	0.80	0.73

Refrigerant Liquid Temperature °F		40	50	60	70	80	90	100	110	120	130	140
R-401A	Correction Factor	1.34	1.29	1.23	1.17	1.12	1.06	1.00	0.94	0.88	0.82	0.75
R-402A		1.57	1.48	1.39	1.29	1.20	1.10	1.00	0.90	0.79	0.68	0.56

These factors include corrections for liquid refrigerant density and net refrigerating effect and are based on an average evaporator temperature of 40°F. For each 10°F reduction in evaporating temperature, capacities are reduced by approximately 1-1/2%.

SPORLAN
248-336

Liquid Capacity Selection Table R404A, 407C, 502, 507, 717

** Models with "HP" are rated for High Pressure Gases i.e. R410A*

TYPE NUMBER						CONNECTIONS Inches	PORT SIZE Inches	TONS OF REFRIGERATION																							
"A" and "B" Series Valves			"E" Series Extended Connections					404A					407C					502					507					717				
								PRESSURE DROP — psi*																							
Without Manual Lift Stem		With Manual Lift Stem	Without Manual Lift Stem		With Manual Lift Stem			1	2	3	4	5	1	2	3	4	5	1	2	3	4	5	1	2	3	4	5	1	2	3	4	5
Normally Closed	Normally Open	Normally Closed	Normally Closed	Normally Open	Normally Closed																										
A3P1	---	---	---	---	---	3/8 NPT Female	.101	0.6	0.9	**1.1**	1.2	1.4	0.8	1.2	**1.5**	1.7	1.9	0.6	0.8	**1.0**	1.2	1.4	0.6	0.8	**1.0**	1.2	1.4	---	---	---	---	---
A3F1	---	---	---	---	---	1/4 SAE Flare																									
A3S1	---	---	E3S120	---	---	1/4 ODF Solder																									
	---	---	E3S130	---	---	3/8 ODF Solder																									
---	---	---	E5S120	---	---	1/4 ODF Solder	.150	1.1	1.5	**1.9**	2.1	2.4	1.5	2.1	**2.6**	3.0	3.4	1.0	1.5	**1.8**	2.1	2.4	1.0	1.5	**1.8**	2.1	2.4	---	---	---	---	---
---	---	---	E5S130HP	---	---	3/8 ODF Solder																									
B6P1	---	MB6P1	---	---	---	3/8 NPT Female	3/16	1.9	2.7	**3.3**	3.8	4.2	2.6	3.7	**4.5**	5.2	5.8	1.9	2.6	**3.2**	3.7	4.1	1.9	2.6	**3.2**	3.7	4.1	---	---	---	---	---
B6F1	---	MB6F1	---	---	---	3/8 SAE Flare																									
B6S1	---	MB6S1	E6S130HP	---	ME6S130HP	3/8 ODF Solder																									
	---		E6S140HP	---	ME6S140HP	1/2 ODF Solder																									
B9P2	OB9P2	MB9P2	---	---	---	3/8 NPT Female	9/32	3.1	4.4	**5.4**	6.2	6.9	4.3	6.1	**7.4**	8.6	9.6	3.0	4.3	**5.2**	6.0	6.8	3.0	4.3	**5.2**	6.0	6.7	---	---	---	---	---
B9F2	OB9F2	MB9F2	---	---	---	3/8 SAE Flare																									
---	---	---	E9S230	OE9S230	ME9S230	3/8 ODF Solder																									
B9S2	OB9S2	MB9S2	E9S240HP	OE9S240	ME9S240HP	1/2 ODF Solder																									
B10F2	OB10F2	MB10F2	---	---	---	1/2 SAE Flare	5/16	4.2	6.0	**7.3**	8.5	9.5	5.9	8.3	**10.2**	11.8	13.2	4.2	5.9	**7.2**	8.3	9.3	4.2	5.9	**7.2**	8.3	9.3	---	---	---	---	---
---	---	---	E10S240HP	OE10S240	ME10S240HP	1/2 ODF Solder																									
B10S2	OB10S2	MB10S2	E10S250HP	OE10S250	ME10S250HP	5/8 ODF Solder																									
B14P2	OB14P2	MB14P2	---	---	---	1/2 NPT Female	7/16	6.0	8.5	**10.4**	12.0	13.4	8.4	11.8	**14.5**	16.7	18.7	5.9	8.4	**10.2**	11.8	13.2	5.9	8.3	**10.2**	11.8	13.2	---	---	---	---	---
B14S2	OB14S2	MB14S2	E14S250HP	OE14S250	ME14S250HP	5/8 ODF Solder																									
B19S2	OB19S2	MB19S2	E19S250HP	OE19S250	ME19S250HP	5/8 ODF Solder																									
B19P2	OB19P2	MB19P2	---	---	---	3/4 NPT Female	19/32	9.2	13.1	**16.0**	18.5	20.7	12.8	18.2	**22.3**	25.8	28.8	9.0	12.8	**15.7**	18.2	20.3	9.0	12.8	**15.7**	18.1	20.3	---	---	---	---	---
B19S2	OB19S2	MB19S2	E19S270HP	OE19S270	ME19S270HP	7/8 ODF Solder																									
B25P2	OB25P2	MB25P2	---	---	---	1 NPT Female	25/32	15.7	22.3	**27.4**	31.6	35.4	21.9	31.0	**38.0**	44.0	49.2	15.5	21.9	**26.8**	31.0	34.7	15.4	21.8	**26.8**	30.9	34.6	---	---	---	---	---
B25S2	OB25S2	MB25S2	E25S270HP	OE25S270	ME25S270HP	7/8 ODF Solder																									
			E25S290HP	OE25S290	ME25S290HP	1-1/8 ODF Solder																									
---	---	---	E35S190	OE35S190	ME35S190	1-1/8 ODF Solder	1	25.5	37.3	**46.5**	54.4	61.4	35.6	52.0	**64.8**	75.9	85.7	25.3	36.9	**46.0**	53.8	60.8	25.1	36.6	**45.6**	53.4	60.3	---	---	---	---	---
			E35S1110	OE35S1110	ME35S1110	1-3/8 ODF Solder																									
---	---	---	E42S2130	OE42S2130	ME42S2130	1-5/8 ODF Solder	1-5/16	40.8	55.2	**65.8**	74.6	82.2	56.4	76.3	**91.1**	103	114	39.5	53.4	**63.7**	72.2	79.5	39.8	53.8	**64.2**	72.8	80.2	---	---	---	---	---
---	---	---	E42S2170	OE42S2170	ME42S2170	2-1/8 ODF Solder																									

*Do not use below 1 psi pressure drop, except Types A3, E3 and MA5 valves.
Liquid capacities for Refrigerants 404A, 407C, 502 and 507 shown in the above table are based on 40°F evaporating and 100°F liquid case. Refrigerant 717 capacities are based on 5°F evaporating and 86°F liquid.

REFRIGERANT LIQUID TEMPERATURE CORRECTION FACTORS

Refrigerant Liquid Temperature °F		40	50	60	70	80	90	100	110	120	130	140
R-404A	Correction Factor	1.58	1.49	1.39	1.30	1.20	1.10	1.00	0.90	0.79	0.68	0.57
R-407C		1.45	1.38	1.30	1.23	1.15	1.08	1.00	0.92	0.84	0.75	0.67

Refrigerant Liquid Temperature °F		40	50	60	70	80	90	100	110	120	130	140
R-502	Correction Factor	1.48	1.40	1.32	1.24	1.16	1.08	1.00	0.92	0.84	0.75	0.67
R-507		1.54	1.45	1.36	1.27	1.18	1.09	1.00	0.90	0.80	0.69	0.56

Refrigerant Liquid Temperature °F		0	10	20	30	40	50	60	70	80	86	90	100
R-717	Correction Factor	1.27	1.24	1.21	1.17	1.14	1.11	1.08	1.05	1.02	1.00	0.99	0.96

The **404A, 407C, 502,** and **507** factors include corrections for liquid refrigerant density and net refrigerating effect and are based on an average evaporator temperature of 40°F. For each 10°F reduction in evaporating temperature, capacities are reduced by approximately 1-1/2%. The **R-717** factors include corrections for liquid refrigerant density and net refrigerating effect and are based on an average evaporator temperature of 5°F. For each 10°F reduction in evaporating temperature, the above capacities are reduced by approximately 3/4%.

Discharge Gas and Suction Capacities R22, 134a, 401A, 402A

VALVE SERIES	DISCHARGE GAS CAPACITIES — TONS Pressure Drop Across Valve — psi					
	2	5	10	25	50	100
REFRIGERANT 22						
A3 & E3	0.24	0.39	**0.56**	0.77	0.99	1.11
E5	0.45	0.71	**1.02**	1.83	2.36	2.69
B6 & E6	0.84	1.31	**1.85**	3.10	3.89	4.15
B9 & E9	1.35	2.13	**3.00**	4.65	6.20	7.71
B10 & E10	1.83	2.90	**4.09**	7.07	9.17	10.6
B14 & E14	2.62	4.13	**5.83**	9.72	12.8	15.5
B19 & E19	3.93	6.23	**8.84**	14.4	19.1	23.4
B25 & E25	6.74	10.7	**15.1**	23.0	30.5	37.4
E35	9.90	16.3	**23.8**	40.3	53.7	66.8
E42	21.0	33.1	**46.8**	67.2	89.0	109
REFRIGERANT 134a						
A3 & E3	0.20	0.32	**0.46**	0.60	0.71	0.72
E5	0.37	0.59	**0.84**	1.44	1.72	1.74
B6 & E6	0.70	1.09	**1.54**	2.39	2.70	2.70
B9 & E9	1.12	1.77	**2.50**	3.72	4.76	5.30
B10 & E10	1.52	2.41	**3.40**	5.56	6.74	6.92
B14 & E14	2.17	3.43	**4.84**	7.73	9.65	10.3
B19 & E19	3.26	5.17	**7.34**	11.5	14.5	15.8
B25 & E25	5.60	8.87	**12.6**	18.4	23.2	25.2
E35	8.1	13.4	**19.6**	32.1	40.8	44.9
E42	17.4	27.5	**38.9**	53.6	67.6	73.3
REFRIGERANT 401A						
A3 & E3	0.20	0.33	**0.47**	0.62	0.74	0.74
E5	0.38	0.61	**0.86**	1.48	1.77	1.81
B6 & E6	0.72	1.12	**1.58**	2.46	2.79	2.79
B9 & E9	1.15	1.82	**2.56**	3.83	4.90	5.49
B10 & E10	1.56	2.47	**3.49**	5.73	6.96	7.16
B14 & E14	2.23	3.52	**4.97**	7.95	9.96	10.6
B19 & E19	3.35	5.31	**7.53**	11.8	15.0	16.3
B25 & E25	5.74	9.11	**12.9**	18.9	23.9	26.1
E35	8.32	13.7	**20.0**	33.1	42.1	46.5
E42	17.9	28.3	**40.0**	55.1	69.7	75.9
REFRIGERANT 402A						
A3 & E3	0.21	0.34	**0.49**	0.68	0.89	1.05
E5	0.39	0.63	**0.89**	1.62	2.13	2.55
B6 & E6	0.73	1.14	**1.60**	2.76	3.55	3.99
B9 & E9	1.18	1.85	**2.61**	4.09	5.52	7.05
B10 & E10	1.60	2.52	**3.57**	6.26	8.25	9.99
B14 & E14	2.28	3.59	**5.07**	8.58	11.5	14.3
B19 & E19	3.43	5.45	**7.73**	12.7	17.1	21.5
B25 & E25	5.89	9.33	**13.2**	20.3	27.3	34.4
E35	8.82	14.5	**21.2**	35.5	47.9	61.3
E42	18.3	28.9	**40.8**	59.2	79.5	100

VALVE SERIES	SUCTION CAPACITY* — TONS 1 PSI Pressure Drop and Evaporating Temperatures				
	40°F	20°F	0°F	– 20°F	– 40°F
REFRIGERANT 22					
A3 & E3	0.11	0.09	0.07	0.05	0.04
E5	0.22	0.17	0.14	0.11	0.08
B6 & E6	0.42	0.34	0.27	0.21	0.16
B9 & E9	0.66	0.53	0.42	0.32	0.24
B10 & E10	0.91	0.73	0.57	0.44	0.33
B14 & E14	1.30	1.04	0.82	0.63	0.48
B19 & E19	1.94	1.54	1.21	0.93	0.70
B25 & E25	3.28	2.62	2.06	1.59	1.19
E35	4.60	3.61	2.78	2.10	1.54
E42	9.57	7.64	6.00	4.62	3.48
REFRIGERANT 134a					
A3 & E3	0.09	0.07	0.05	---	---
E5	0.17	0.13	0.10	---	---
B6 & E6	0.32	0.25	0.19	---	---
B9 & E9	0.51	0.39	0.30	---	---
B10 & E10	0.70	0.54	0.41	---	---
B14 & E14	1.00	0.77	0.58	---	---
B19 & E19	1.49	1.14	0.86	---	---
B25 & E25	2.53	1.94	1.46	---	---
E35	3.48	2.62	1.93	---	---
E42	7.36	5.66	4.26	---	---
REFRIGERANT 401A					
A3 & E3	0.09	0.07	0.05	---	---
E5	0.18	0.14	0.10	---	---
B6 & E6	0.34	0.26	0.20	---	---
B9 & E9	0.53	0.41	0.32	---	---
B10 & E10	0.73	0.57	0.44	---	---
B14 & E14	1.05	0.82	0.62	---	---
B19 & E19	1.55	1.21	0.92	---	---
B25 & E25	2.63	2.05	1.57	---	---
E35	3.62	2.76	2.07	---	---
E42	7.68	5.98	4.57	---	---
REFRIGERANT 402A					
A3 & E3	0.09	0.07	0.06	0.04	0.03
E5	0.19	0.15	0.11	0.08	0.06
B6 & E6	0.36	0.28	0.22	0.16	0.12
B9 & E9	0.57	0.44	0.34	0.25	0.19
B10 & E10	0.78	0.61	0.47	0.35	0.25
B14 & E14	1.11	0.87	0.67	0.50	0.37
B19 & E19	1.66	1.29	0.99	0.74	0.54
B25 & E25	2.80	2.19	1.67	1.26	0.92
E35	4.01	3.07	2.31	1.69	1.21
E42	8.18	6.37	4.88	3.66	2.67

*Minimum operating capacity is at one psi pressure drop for pilot operated valves.

EVAPORATOR TEMPERATURE CORRECTION FACTORS

Evaporator Temperature °F	40	30	20	10	0	– 10	– 20	– 30	– 40
Multiplier	1.00	0.96	0.93	0.90	0.87	0.84	0.81	0.78	0.75

Capacities based on 100°F condensing temperature, isentropic compression plus 50°F, 40°F evaporator and 65°F suction gas. For capacities at other conditions use the multipliers in table at left.

Discharge Gas and Suction Capacities R404A, 407C, 502, 507

VALVE SERIES	DISCHARGE GAS CAPACITIES — TONS Pressure Drop Across Valve — psi					
	2	5	10	25	50	100
REFRIGERANT 404A						
A3 & E3	0.22	0.35	**0.51**	0.70	0.91	1.06
E5	0.40	0.64	**0.91**	1.66	2.17	2.56
B6 & E6	0.75	1.17	**1.65**	2.82	3.60	3.99
B9 & E9	1.21	1.90	**2.68**	4.19	5.64	7.16
B10 & E10	1.64	2.59	**3.66**	6.40	8.41	10.1
B14 & E14	2.34	3.69	**5.21**	8.79	11.7	14.5
B19 & E19	3.53	5.59	**7.93**	13.0	17.4	21.8
B25 & E25	6.04	9.60	**13.6**	20.8	27.8	34.9
E35	9.03	14.9	**21.7**	36.4	49.0	62.2
E42	18.8	29.7	**41.9**	60.7	81.1	102
REFRIGERANT 407C						
A3 & E3	0.24	0.38	**0.55**	0.76	0.96	1.06
E5	0.44	0.71	**1.00**	1.80	2.31	2.58
B6 & E6	0.83	1.30	**1.83**	3.05	3.78	3.98
B9 & E9	1.34	2.10	**2.97**	4.58	6.08	7.49
B10 & E10	1.81	2.86	**4.05**	6.95	8.96	10.21
B14 & E14	2.59	4.08	**5.76**	9.57	12.6	15.0
B19 & E19	3.88	6.16	**8.74**	14.2	18.7	22.7
B25 & E25	6.66	10.6	**15.0**	22.7	29.9	36.3
E35	9.79	16.1	**23.6**	39.6	52.7	64.9
E42	20.7	32.7	**46.3**	66.1	87.3	106
REFRIGERANT 502						
A3 & E3	0.19	0.31	**0.45**	0.62	0.80	0.91
E5	0.36	0.57	**0.81**	1.47	1.90	2.20
B6 & E6	0.66	1.04	**1.46**	2.49	3.14	3.41
B9 & E9	1.07	1.69	**2.38**	3.71	4.97	6.24
B10 & E10	1.46	2.30	**3.26**	5.66	7.38	8.68
B14 & E14	2.08	3.28	**4.63**	7.77	10.3	12.6
B19 & E19	3.13	4.97	**7.05**	11.5	15.3	19.0
B25 & E25	5.37	8.51	**12.1**	18.4	24.5	30.3
E35	8.03	13.2	**19.3**	32.2	43.1	54.1
E42	16.7	26.4	**37.3**	53.7	71.4	88.4
REFRIGERANT 507						
A3 & E3	0.21	0.34	**0.49**	0.68	0.89	1.04
E5	0.39	0.63	**0.89**	1.62	2.12	2.51
B6 & E6	0.73	1.14	**1.60**	2.75	3.52	3.92
B9 & E9	1.18	1.85	**2.61**	4.09	5.50	6.99
B10 & E10	1.60	2.52	**3.57**	6.24	8.21	9.86
B14 & E14	2.28	3.59	**5.07**	8.56	11.4	14.2
B19 & E19	3.43	5.45	**7.72**	12.7	17.0	21.3
B25 & E25	5.88	9.30	**13.2**	20.3	27.1	34.1
E35	8.81	14.3	**21.2**	35.5	47.8	60.8
E42	18.3	28.9	**40.8**	59.1	79.1	99.3

VALVE SERIES	SUCTION CAPACITY* — TONS 1 PSI Pressure Drop and Evaporating Temperatures				
	40°F	20°F	0°F	– 20°F	– 40°F
REFRIGERANT 404A					
A3 & E3	0.10	0.07	0.06	0.04	0.03
E5	0.19	0.15	0.11	0.08	0.06
B6 & E6	0.36	0.28	0.22	0.16	0.12
B9 & E9	0.58	0.45	0.34	0.25	0.18
B10 & E10	0.79	0.61	0.47	0.35	0.25
B14 & E14	1.13	0.88	0.67	0.50	0.36
B19 & E19	1.69	1.30	0.99	0.74	0.53
B25 & E25	2.86	2.21	1.68	1.26	0.91
E35	4.07	3.09	2.31	1.69	1.20
E42	8.33	6.45	4.91	3.66	2.65
REFRIGERANT 407C					
A3 & E3	0.10	0.08	0.06	0.04	---
E5	0.20	0.16	0.12	0.09	---
B6 & E6	0.39	0.30	0.23	0.17	---
B9 & E9	0.62	0.48	0.36	0.27	---
B10 & E10	0.85	0.66	0.50	0.37	---
B14 & E14	1.21	0.94	0.72	0.54	---
B19 & E19	1.80	1.40	1.06	0.79	---
B25 & E25	3.06	2.37	1.81	1.35	---
E35	4.27	3.25	2.43	1.77	---
E42	8.92	6.92	5.27	3.92	---
REFRIGERANT 502					
A3 & E3	0.09	0.07	0.05	0.04	0.03
E5	0.17	0.14	0.11	0.08	0.06
B6 & E6	0.33	0.26	0.20	0.15	0.11
B9 & E9	0.52	0.41	0.32	0.24	0.18
B10 & E10	0.72	0.57	0.44	0.33	0.25
B14 & E14	1.03	0.81	0.63	0.47	0.35
B19 & E19	1.54	1.21	0.93	0.70	0.52
B25 & E25	2.60	2.04	1.58	1.19	0.88
E35	3.72	2.87	2.17	1.61	1.16
E42	7.59	5.95	4.60	3.48	2.57
REFRIGERANT 507					
A3 & E3	0.09	0.07	0.06	0.04	0.03
E5	0.19	0.15	0.11	0.08	0.06
B6 & E6	0.36	0.28	0.21	0.16	0.12
B9 & E9	0.56	0.44	0.33	0.25	0.18
B10 & E10	0.78	0.60	0.46	0.34	0.25
B14 & E14	1.11	0.86	0.66	0.49	0.36
B19 & E19	1.65	1.28	0.98	0.73	0.53
B25 & E25	2.80	2.17	1.66	1.24	0.90
E35	4.00	3.04	2.28	1.67	1.19
E42	8.16	6.33	4.83	3.61	2.62

*Minimum operating capacity is at one psi pressure drop for pilot operated valves.

EVAPORATOR TEMPERATURE CORRECTION FACTORS

Evaporator Temperature °F	40	30	20	10	0	– 10	– 20	– 30	– 40
Multiplier	1.00	0.96	0.93	0.90	0.87	0.84	0.81	0.78	0.75

Capacities based on 100°F condensing temperature, isentropic compression plus 50°F, 40°F evaporator and 65°F suction gas. For capacities at other conditions use the multipliers in table at left.

Selection – Capacity Rating R-410A

Capacity, MOPD and Electrical specifications are required. All solenoid valves are tested and rated in accordance with A.R.I. Standard No. 760-2001.

- **These valves may be mounted horizontally, on their side or in a vertical line**

Liquid Capacity Selection Table

Tons ▪ psi ▪ °F

TYPE NUMBER "E" Series Extended Connections		CONNECTIONS ODF SOLDER Inches	PORT SIZE Inches	TONS OF REFRIGERATION PRESSURE DROP — psi*				
Without Manual Lift Stem Normally Closed	With Manual Lift Stem Normally Closed			1	2	3	4	5
E5S130-HP	–	3/8	0.150	1.52	2.16	2.66	3.08	3.45
E6S130-HP	ME6S130-HP	3/8	3/16	2.73	3.84	4.68	5.40	6.02
–	ME6S140-HP	1/2						
E9S240-HP	ME9S240-HP	1/2	9/32	4.44	6.27	7.66	8.83	9.86
E9S250-HP	–	5/8						
E10S240-HP	–	1/2	5/16	6.08	8.59	10.5	12.1	13.6
E14S250-HP	ME14S250-HP	5/8	7/16	8.64	12.2	14.9	17.2	19.2
E19S270-HP	ME19S270-HP	7/8	19/32	13.2	18.7	22.9	26.5	29.7
E25S270-HP	–	7/8	25/32	22.5	31.9	39.2	45.3	50.6
E25S290-HP	ME25S290-HP	1-1/8						
–	ME35S190-HP	1-1/8	1	36.7	53.5	66.8	78.1	88.2
–	ME35S1110-HP	1-3/8						
E42S2130-HP	–	1-5/8	1-5/16	69.6	98.4	120	139	156

* Do not use below 1 psi (0.07 bar) pressure drop.

Capacities based on 100°F (38°C) liquid temperature, 40°F (5°C) evaporator temperature. For other liquid line temperatures use liquid correction factors below. Maximum Operating Pressure Differential (MOPD) for the AC coil is 450 psid (31 bar). Maximum Rated Pressure (MRP) = 700 psig (48.3 bar).

LIQUID TEMPERATURE CORRECTION FACTORS °F										
40	50	60	70	80	90	100	110	120	130	140
CORRECTION FACTOR, CF LIQUID TEMPERATURE										
1.45	1.38	1.30	1.23	1.15	1.08	1.00	0.92	0.83	0.74	0.64

LIQUID TEMPERATURE CORRECTION FACTORS °C											
5	10	15	20	25	30	35	40	45	50	55	60
CORRECTION FACTOR, CF LIQUID TEMPERATURE											
1.45	1.38	1.32	1.25	1.18	1.11	1.04	0.97	0.90	0.82	0.74	0.64

These factors include corrections for liquid refrigerant density and net refrigerating effect and are based on an average evaporator temperature of 40°F (5°C). For each 10°F (10°C) reduction in evaporating temperature, capacities are reduced by approximately 1-1/2% (2.7%).

Discharge Gas Capacity

- Tons ▪ psi ▪ °F

VALVE SERIES	DISCHARGE GAS CAPACITIES – Tons PRESSURE DROP ACROSS VALVE – psi					
	2	5	10	25	50	100
E5	0.54	0.86	1.22	2.26	3.02	3.75
B6 & E6	1.00	1.57	2.20	3.86	5.06	6.04
B9 & E9	1.61	2.54	3.58	5.67	7.72	10.1
B10 & E10	2.19	3.46	4.89	8.7	11.7	14.6
B14 & E14	3.13	4.93	6.96	11.9	16.1	20.7
B19 & E19	4.71	7.47	10.6	17.6	23.9	31.0
B25 & E25	8.07	12.8	18.1	28.1	38.2	49.5
E35	12.0	19.8	28.9	49.3	67.3	88.5
E42	25.1	39.6	56.0	82.1	111	144

* Minimum operating capacity is at 1 psi (0.07 bar) pressure drop.

Capacities based on 100°F (38°C) condensing temperature, isentropic compression plus 50°F (28°C), 40°F (5°C) evaporator and 65°F (18.3°C) suction gas. For capacities at other conditions, consult Sporlan Division of Parker, Washington, MO.

Specifications

MKC-1 Coil

Tons ▪ psi ▪ °F

VALVE SERIES	TYPE	CONNECTIONS ODF - Inches	PORT SIZE Inches	MOPD psi		NOMINAL LIQUID CAPACITIES TONS of REFRIGERATION
				AC	DC	PRESSURE DROP 3 psi
E5	E5S130-HP	3/8	150	450	400	2.66
E6	E6S130-HP	3/8	3/16	450	400	4.68
	ME6S130-HP					
	ME6S140-HP	1/2				

MKC-1 and OMKC-1 Coil

Tons ▪ psi ▪ °F

VALVE SERIES	TYPE	CONNECTIONS ODF - Inches	PORT SIZE Inches	MOPD psi		NOMINAL LIQUID CAPACITIES TONS of REFRIGERATION
				AC	DC	PRESSURE DROP 3 psi
E35	ME35S190-HP	1-1/8	1	450	400	66.7
	ME35S1110-HP	Q 1-3/8				

- Maximum rated pressure 700 psi (48.3 bar).
- Capacities based on 100°F (38°C) liquid temperature, 40°F (5°C) evaporator temperature. For other liquid line temperatures use liquid correction factors below. Maximum Operating Pressure Differential (MOPD) for the AC coil is 450 psid (31 bar). Maximum Rated Pressure (MRP) = 700 psig (48.3 bar).

MKC-2 and OMKC-2 Coil

Tons ▪ psi ▪ °F

VALVE SERIES	TYPE	CONNECTIONS ODF - Inches	PORT SIZE Inches	MOPD psi		NOMINAL LIQUID CAPACITIES TONS of REFRIGERATION
				AC	DC	PRESSURE DROP 3 psi
E9	E9S230-HP	3/8	9/32	450	400	7.66
	E9S240-HP	1/2				
	E9S250-HP	5/8				
E10	E10S240-HP	1/2	5/16			10.5
E14	E14S250-HP	5/8	7/16			14.9
E19	E19S270-HP	7/8	19/32			22.9
E25	E25S270-HP	7/8	25/32			39.2
	E25S290-HP	1-1/8				

MKC-2 and OMKC-2 Coil

Tons ▪ psi ▪ °F

VALVE SERIES	TYPE	CONNECTIONS ODF - Inches	PORT SIZE Inches	MOPD psi		NOMINAL LIQUID CAPACITIES TONS of REFRIGERATION
				AC	DC	PRESSURE DROP 3 psi
E42	ME42S2130-HP	1-5/8	1-5/16	450	400	120

- Maximum rated pressure 700 psi (48.3 bar).
- Capacities based on 100°F (38°C) liquid temperature, 40°F (5°C) evaporator temperature. For other liquid line temperatures use liquid correction factors below. Maximum Operating Pressure Differential (MOPD) for the AC coil is 450 psid (31 bar). Maximum Rated Pressure (MRP) = 700 psig (48.3 bar).

SOLENOID, RECLAIM, HOT GAS VALVES

SPORLAN

Disc Type Industrial Solenoid Valves
Air - Water - Steam - Light Oil

Less Coil			
Type	Connections inches	Coil Type Required	LIST
W3P1	1/4 NPT	MKC-1 ($202.10)	$308.00
W6P1	3/8 NPT		$393.00
W14P2	1/2 NPT	MKC-2 ($247.50)	$868.00
W19P2	3/4 NPT		$1,278.00
W25P2	1 NPT		$1,976.00

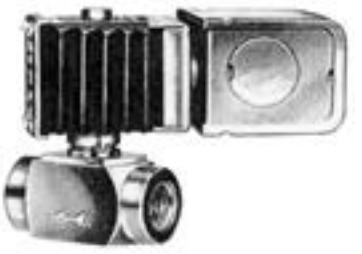

W3P1

3-Way Heat Reclaim Valves
Refrigerants 12-22-502

Less Coil				
Type		Connections inches	Coil Type Required	LIST
5D5B	5D5C	5/8 ODF	MKC-1 ($202.10)	$7,082.00
8D7B	8D7C	7/8 ODF		
8D9B	8D9C	1-1/8 ODF		
12D11B	12D11C	1-3/8 ODF		
12D13B	12D13C	1-5/8 ODF		
16D17B	16D17C	2-1/8 ODF	MKC-2 ($247.50)	



8D

3-Way Hot Gas Defrost Valves
Refrigerants 12-22-502

Less Coil			
Type	Connections inches	Coil Type Required	LIST
10G79B	1-1/8 ODF	MKC-1 ($202.10)	$4,325.00
10G711B	1-3/8 ODF		$4,488.00
10G711C	1-3/8 ODF		$4,739.00



10G711C

3-WAY HEAT RECLAIM VALVES

SPORLAN R-410A

Sporlan Heat Reclaim Valves are tight synthetic seating three way valves designed specifically to divert hot gas from the normal to auxiliary condenser.

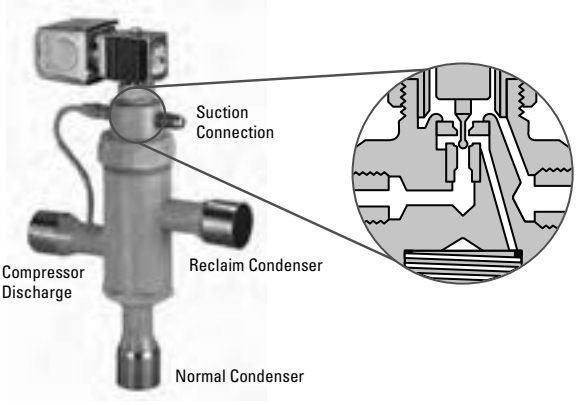

Operation "B" Type

Normal (Outdoor) Condenser – De-energized – With the pilot valve de-energized, high side pressure is prevented from entering the cavity above the piston-seat assembly. At the same time the upper pilot port is opened to suction pressure. The resulting pressure differential across the piston moves the piston-seat assembly to close the reclaim (upper) main port. When the upper pilot port is open, the cavity above the piston is open to suction. Pump out of the reclaim condenser is controlled by the bleed rate through the piston. After the reclaim condenser has been pumped out, and the valve continues to operate in the normal condenser mode, **all flow ceases,** thus eliminating high to low side bleed and the resulting capacity loss.

"C" Type

Normal (Outdoor) Condenser – De-energized – With the pilot valve de-energized, high side pressure is prevented from entering cavity above the piston-seat assembly. At the same time the upper pilot port is opened to suction pressure. The resulting pressure differential across the piston moves the piston-seat assembly to close the reclaim (upper) main port. The non bleed piston prevents high to low side bleed with the system operating in the normal condenser mode.

"B" and "C" Type

Reclaim (Reheat) Condenser – Energized – When the pilot valve is energized, high side pressure is permitted to flow through the lower pilot port. At the same time the upper pilot port is closed to suction. High side pressure on top of the piston moves the piston-seat assembly to close the normal condenser port and open the reclaim (upper) main port. With the upper pilot port closed there is no high to low side bleed loss with the system operating in the reclaim mode.

Heat Reclaim Systems

- **with Head Pressure Control**
- **with Split Condenser Control**

When employing heat reclaim on a refrigeration system, the addition of head pressure controls is important not only to maintain liquid pressure at the expansion valve inlet, but also to assure availability of quality hot gas at the reclaim heat exchanger. Split condenser controls are important to minimize the required refrigerant charge for wintertime operation. And, integral check valves are important to minimize installation costs. (See Bulletin 30-20.)

Specifications

MKC-1 COIL						
TYPE	CONNECTION ODF SOLDER Inches	PORT SIZE	MOPD psi	MAXIMUM RATED PRESSURE psi	STANDARD COIL RATINGS	
			AC		VOLTS/CYCLES	WATTS
B5D5B, B5D5C	5/8	5/8	400	650	24/50-60 120/50-60 208-240/50-60 120-208-240/50-60	10
8D7B, 8D7C	7/8	3/4	300	450		
8D7B-HP, 8D7C-HP	7/8		400	650		
8D9B, 8D9C	1-1/8		300	450		
8D9B-HP, 8D9C-HP	1-1/8		400	650		
12D11B, 12D11C	1-3/8	1-1/4	300	450		
12D13B, 12D13C	1-5/8					
12D17B	2-1/8					
16D17B, 16D17C	2-1/8	2				

Available with junction box or conduit boss at no extra charge. For other voltages and cycles, consult Sporlan, Washington, MO.

Selection

1. For a given refrigerant, select a valve having a port size with capacity most closely matching the evaporator maximum load requirements in tons at the design evaporator temperature. Take into account the allowable pressure drop across the valve port.
2. Select the proper coil assembly for the valve type and match the voltage requirements. All AC voltage options are available. For voltages not listed in coil specification, consult Bulletin 30-10, or Sporlan, Washington, MO.

3-WAY HEAT RECLAIM VALVES

SPORLAN R-410A

Capacities – Tons

Capacities are based on 100°F condensing temperature isentropic compression plus 50°F, evaporator temperature as shown plus 25°F superheat suction gas.

EVAPORATOR TEMP. °F	REFRIGERANT																							
	22								134a								401A							
	psi – PRESSURE DROP																							
	2				4				2				4				2				4			
	B5D	8D	12D	16D	B5D	8D	12D	16D	B5D	8D	12D	16D	B5D	8D	12D	16D	B5D	8D	12D	16D	B5D	8D	12D	16D
40	4.7	10.1	29.1	70.1	6.6	14.2	41.9	100.0	4.0	10.1	29.1	70.1	5.5	11.8	34.6	83.1	4.1	8.7	24.6	59.3	5.7	12.1	35.4	85.1
30	4.7	9.9	28.6	68.7	6.5	13.9	41.1	98.6	3.9	9.9	28.6	68.7	5.4	11.5	33.8	81.1	4.0	8.5	24.1	58.0	5.5	11.9	34.6	83.2
20	4.6	9.7	28.0	67.4	6.3	13.6	40.3	96.7	3.8	9.7	28.0	67.4	5.2	11.2	32.9	79.1	3.9	8.3	23.5	56.6	5.4	11.6	33.8	81.3
10	4.5	9.5	27.4	66.0	6.2	13.4	39.4	94.6	3.7	9.5	27.4	66.0	5.1	10.9	32.0	77.0	3.8	8.1	22.9	55.3	5.3	11.3	33.0	79.3
0	4.4	9.3	26.8	64.5	6.1	13.1	38.5	92.5	3.6	9.3	26.8	64.5	5.0	10.6	31.1	74.8	3.7	7.9	22.3	53.8	5.1	11.0	32.1	77.2
-10	4.3	9.1	26.2	63.0	5.9	12.8	37.6	90.4	3.5	9.1	26.2	63.0	4.8	10.3	30.2	72.7	3.6	7.7	21.7	52.4	5.0	10.7	31.3	75.2
-20	4.2	8.9	25.5	61.5	5.8	12.5	36.7	88.2	3.4	8.9	25.5	61.5	4.7	10.0	29.3	70.5	3.5	7.5	21.1	50.9	4.9	10.4	30.4	73.1
-30	4.1	8.7	24.9	59.9	5.7	12.1	35.8	85.9	3.3	8.7	24.9	59.9	4.5	9.7	28.4	68.2	3.4	7.2	20.5	49.4	4.7	10.1	29.5	70.9
-40	4.0	8.4	24.2	58.2	5.5	11.8	34.8	83.6	3.2	8.4	24.2	58.2	4.4	9.4	27.5	66.0	3.3	7.0	19.9	47.9	4.6	9.8	28.6	68.8

EVAPORATOR TEMP. °F	REFRIGERANT																							
	402A								404A								407C							
	psi – PRESSURE DROP																							
	2				4				2				4				2				4			
	B5D	8D	12D	16D	B5D	8D	12D	16D	B5D	8D	12D	16D	B5D	8D	12D	16D	B5D	8D	12D	16D	B5D	8D	12D	16D
40	4.1	8.8	25.7	61.7	5.7	12.3	36.9	88.5	4.2	9.0	26.3	63.3	5.8	12.6	37.9	90.8	4.7	10.0	28.8	69.3	6.5	14.0	41.4	99.4
30	4.0	8.5	25.0	60.1	5.5	12.0	36.0	86.2	4.1	8.8	25.6	61.6	5.7	12.3	36.9	88.3	4.6	9.8	28.1	67.6	6.3	13.7	40.4	97.0
20	3.9	8.3	24.3	58.4	5.4	11.6	35.0	83.8	4.0	8.5	24.9	59.8	5.5	11.9	35.8	85.8	4.5	9.5	27.4	66.0	6.2	13.3	39.4	94.6
10	3.8	8.1	23.6	56.7	5.2	11.3	33.9	81.3	3.8	8.3	24.1	58.0	5.3	11.6	34.7	83.2	4.3	9.3	26.7	64.2	6.0	13.0	38.4	92.1
0	3.6	7.8	22.8	54.9	5.0	10.9	32.9	78.8	3.7	8.0	23.3	56.1	5.2	11.2	33.6	80.4	4.2	9.0	25.9	62.4	5.9	12.6	37.3	89.6
-10	3.5	7.5	22.1	53.0	4.9	10.6	31.7	76.1	3.6	7.7	22.5	54.1	5.0	10.8	32.4	77.6	4.1	8.8	25.2	60.6	5.7	12.3	36.2	87.0
-20	3.4	7.3	21.3	51.2	4.7	10.2	30.6	73.4	3.5	7.4	21.7	52.1	4.8	10.4	31.2	74.8	4.0	8.5	24.4	58.8	5.5	11.9	35.1	84.3
-30	3.3	7.0	20.5	49.2	4.5	9.8	29.5	70.6	3.3	7.1	20.8	50.1	4.6	10.0	30.0	71.8	3.9	8.2	23.6	56.9	5.4	11.5	34.0	81.6
-40	3.1	6.7	19.7	47.2	4.3	9.4	28.3	67.8	3.2	6.8	20.0	48.0	4.4	9.6	28.7	68.8	3.7	8.0	22.8	54.9	5.2	11.1	32.8	78.8

EVAPORATOR TEMP. °F	REFRIGERANT																							
	410A								502								507							
	psi – PRESSURE DROP																							
	2				4				2				4				2				4			
	B5D	8D	12D	16D	85D	8D	12D	16D	B5D	8D	12D	16D	B5D	8D	12D	16D	B5D	8D	12D	16D	B5D	8D	12D	16D
40	5.6	12.0	—	—	7.8	16.9	—	—	3.7	8.0	23.4	56.2	5.17	11.2	33.7	80.7	4.1	8.8	25.7	61.6	5.7	12.3	36.9	88.4
30	5.5	11.8	—	—	7.7	16.6	—	—	3.6	7.8	22.8	54.9	5.05	10.9	32.8	78.7	4.0	8.5	25.0	60.0	5.5	11.9	35.9	86.1
20	5.4	11.6	—	—	7.5	16.3	—	—	3.5	7.6	22.2	53.4	4.92	10.6	32.0	76.7	3.9	8.3	24.3	58.3	5.4	11.6	34.9	83.6
10	—	—	—	—	—	—	—	—	3.4	7.4	21.6	52.0	4.78	10.4	31.1	74.5	3.7	8.0	23.5	56.5	5.2	11.3	33.8	81.1
0	—	—	—	—	—	—	—	—	3.3	7.2	21.0	50.4	4.65	10.1	30.2	72.4	3.6	7.8	22.8	54.7	5.0	10.9	32.7	78.5
-10	—	—	—	—	—	—	—	—	3.2	7.0	20.3	48.9	4.50	9.74	29.2	70.1	3.5	7.5	22.0	52.8	4.9	10.5	31.6	75.8
-20	—	—	—	—	—	—	—	—	3.1	6.7	19.7	47.3	4.36	9.43	28.3	67.8	3.4	7.2	21.2	50.9	4.7	10.1	30.5	73.1
-30	—	—	—	—	—	—	—	—	3.0	6.5	19.0	45.6	4.21	9.10	27.3	65.5	3.3	7.0	20.4	49.0	4.5	9.8	29.3	70.3
-40	—	—	—	—	—	—	—	—	2.9	6.3	18.3	44.0	4.06	8.77	26.3	63.1	3.1	6.7	19.6	47.0	4.3	9.4	28.1	67.5

For complete information see your Sporlan Wholesaler, our website at www.sporlan.com, or write Sporlan and request Bulletin 30-20.

Nomenclature/Ordering Instructions

When ordering complete valves, specify Valve Type, Voltage and Cycles. When ordering Valve Body ONLY, specify Valve Type. When ordering Coil Assembly ONLY, specify Coil Type, Voltage and Cycles. **Example: MKC-1 120/50-60; MKC-2 120/50-60.**

MKC	–	1	–	120	/	50-60
Coil Type		Size		Voltage		Cycles

SPORLAN

Solenoid Valves for Secondary Coolant Glycol

Description

A new line of solenoid valves to control secondary coolants has been developed for supermarket systems. These fluids include propylene glycol, ethylene glycol, Pecasol 50, Dynalene HC-40, and others. Parker's valve is the only valve designed to meet the requirements of both medium and low temperature applications encountered in supermarket applications.



For Supermarket Refrigeration

What is Secondary Cooling?

In a secondary coolant, or secondary loop system, a chilled solution, such as propylene glycol, is circulated throughout the system rather than liquid refrigerant. Secondary coolant systems are advantageous because they can eliminate liquid refrigerant and suction gas lines running through a store. This reduces installation costs and labor, and eliminates costly refrigerant leaks. Also, PVC tubing can be used, rather than the heavier, more expensive copper tubing normally used in traditional systems. Another benefit is more efficient defrost cycles with less potential product damage.

Minimum Pressure Drop

In order to achieve good heat transfer through a coil surface, minimizing pressure drops throughout the system is critical. Parker secondary coolant valves do not require a minimum pressure to operate.* This is because of the valve's unique "hung diaphragm" design. Other pilot operated valves require some minimum pressure drop to open the diaphragm or piston. This minimum pressure drop is a pressure loss, and means less pressure available at the coil. When using Parker's secondary coolant valves, valve size can be maximized, minimizing the pressure drop.

**The 34E24C2-R1021E is pilot operated and requires a minimum of 5 psi. It uses the AF-4 series coil.*

Specifications - Valve Description

2 way hung diaphragm normally closed valve with brass forged body and EPDM (Ethylene Propylene) trim material.

Maximum Fluid Temperature: -40°F to +180°F
Valve Body: Forged brass
Connections: ODF Copper
Plunger and Pole Piece: Stainless Steel
Enclosing Tube: Stainless Steel
Springs: Stainless Steel
Diaphragm: EPDM
Seals: EPDM
Safe Working Pressure: 10-26 Series = 250 PSIG
34 Series = 225 PSIG

Specifications - Coil

Type: NEMA 4, 4X (3 wire leads) Power: CF5 is 11 watts; AF4 is 6 watts
Power Consumption: Inrush - 53 va holding - 20 va

Capacities - For Liquid

$$Q_{gpm} - C_v \sqrt{\frac{\Delta P}{SG}}$$

SG = Specific gravity
Capacity table based on SG of water @ 1

Sizing Valves

Valve PIN	Connection Size	Cv	Pressure Drop	GPM
10E23C2-R1021E 10E23O2-R1021E	5/8″	4	0.5	2.8
			1	4.0
			2	5.7
			3	6.9
14E23C2-R1021E 14E23O2-R1021E	7/8″	5	0.5	3.5
			1	5.0
			2	7.1
			3	8.7
18E23C2-R1021E 18E23O2-R1021E	1-1/8″	5	0.5	3.5
			1	5.0
			2	7.1
			3	8.7
22EH5C2-R1021E 22E25O2-R1021E	1-3/8″	12.2	0.5	8.6
			1	12.2
			2	17.3
			3	21.1
26EH5C2-R1021E 26E25O2-R1021E	1-5/8″	12.2	0.5	8.6
			1	12.2
			2	17.3
			3	21.1
34E24C2-R1021E 34E24O2-R1021E	2-1/8″	22.5	0.5	15.9
			1	22.5
			2	31.8
			3	39.0

Coil Voltages - 10E, 14E, 18E, 22E, 26E Normally Open or Normally Closed and 34E Normally Open Series Valves

Voltage	Wire Length	Coil Part Number
24 VAC	18″	CF5C01-R1021
120 VAC		CF5C05-R1021
208 VAC		CF5C10-R1021
240 VAC		CF5C15-R1021

Coil Voltages - 34E Normally Closed Valve Only

Voltage	Wire Length	Coil Part Number
24 VAC*	18″	AF4C01-R1021
120 VAC		AF4C05-R1021
208 VAC		AF4C10-R1021
240 VAC*		AF4C15-R1021*

*Minimum order quantity may be required.

Feature	Advantage	Benefit
Ethylene propylene diaphragm and seals.	Compatible with secondary fluids.	Suitable for both medium and low temperature systems.
NEMA 4 coils.	Protects against water, icing and vibration.	Less maintenance, more dependability.
Unique hung diaphragm construction	No minimum pressure differential required.	Pressure drop (loss) is minimized.
Available in sizes 5/8″ to 2-1/8″ ODF.	A valve for every common line size.	Easily matches up to system piping.
Copper ODF extended connections.	Eliminates need for pipe threaded connections and associated leaks.	Allows easy brazing and faster installation.

Bulletin 30-10-1, January 2013 supersedes Bulletin 30-10-1, December 2010 and all prior publications.

SOLENOID VALVES

SPORLAN

Solenoid Valves for Secondary Coolant Glycol

Models 10E to 26E

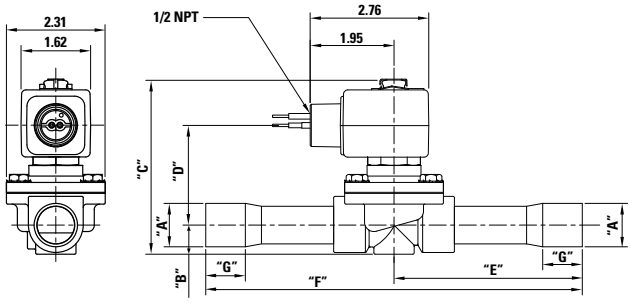

Models 34E

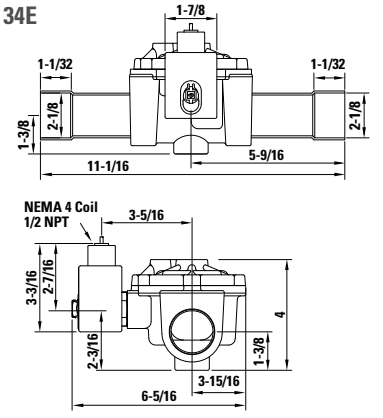

Models 22E2502-R1021E and 26E2502-R1021E look slightly different. UL File MH5567

Normally Closed Valves

Part Number	Cv	MOPD	Orifice	A	B	C	D	E	F	G
10E23C2-R1021E	4	150 psi	5/8″	5/8″	11/16″	4-1/16″	2-5/16″	3-1/4″	6-1/2″	1/2″
14E23C2-R1021E	5	150 psi	3/4″	7/8″	11/16″	4-1/16″	2-5/16″	4-3/8″	8-3/4″	3/4″
18E23C2-R1021E	5	150 psi	3/4″	1-1/8″	11/16″	4-1/16″	2-5/16″	5-5/32″	10-5/16″	15/16″
22EH5C2-R1021E	12.2	50 psi	1″	1-3/8″	13/16″	4-1/2″	3-1/8″	4-11/16″	9-3/8″	15/16″
26EH5C2-R1021E	12.2	50 psi	1″	1-5/8″	13/16″	4-1/2″	3-1/8″	4-11/16″	9-3/8″	15/16″
34E24C2-R1021E*	22.5	125 psi	1-1/2″	2-1/8″	1-3/8″	4″	2-3/16″	5-9/16″	11-1/16″	11/32″

*34E24C2-R1021E requires a minimum of 5 PSI to operate.

Normally Open Valves

Part Number	Cv	MOPD	Orifice	A	B	C	D	E	F	G
10E23O2-R1021E	4	150 psi	5/8″	5/8″	11/16″	4-1/16″	2-5/16″	3-1/4″	6-1/2″	1/2″
14E23O2-R1021E	5	150 psi	3/4″	7/8″	11/16″	4-1/16″	2-5/16″	4-3/8″	8-3/4″	3/4″
18E23O2-R1021E	5	150 psi	3/4″	1-1/8″	11/16″	4-1/16″	2-5/16″	5-5/32″	10-5/16″	15/16″
22E25O2-R1021E	12.2	50 psi	1″	1-3/8″	13/16″	4-1/2″	3-1/8″	4-11/16″	9-3/8″	15/16″
26E25O2-R1021E	12.2	50 psi	1″	1-5/8″	13/16″	4-1/2″	3-1/8″	4-11/16″	9-3/8″	15/16″
34E24O2-R1021E*	22.5	125 psi	1-1/2″	2-1/8″	1-3/8″	4″	2-3/16″	5-9/16″	11-1/16″	11/32″

*34E24O2-R1021E requires a minimum of 5 PSI to operate.

Valve Nomenclature

10	E	–	2	3	–	C	–	2	–	R1021E
Connection Size and Type in 16th Inches			Series			Normally Open/Closed		Body Material Type		Used for Glycol Service
16th Inches Connections	Extended ODF Copper Connections		2 = 2-Way H = Diaphragm Hung	3 = Diaphragm Hung 4 = Diaphragm Offset Pilot 5 = Diaphragm Pivoted Edge		C = Normally Closed O = Normally Open		2 = Brass		Series Designation

Coil Nomenclature

Ordering Examples: (CF5C10-R1021 for 10E, 14E, 18E, 22E, 26E Normally Closed or Normally Open and 34E Normally Open Series Valves)

C	–	F	–	5	–	C	–	01		–	R1021
Wattage		Coil Class		Coil Enclosure		Leads		Voltage			Used for Glycol Service
C = 11 Watts		F = Standard (155°F)		5 = Special (Molded Coil with External Conduit Boss Housing)		18″		01 = 24/60 05 = 120/60*	10 = 208/60* 15 = 240/60*		Series Designation

Ordering Examples: (AF4C10-R1021 for 34E Normally Closed Valve Only)

A	–	F	–	4	–	C	–	05		–	R1021
Wattage		Coil Class		Coil Enclosure		Leads		Voltage			Used for Glycol Service
A = 6 Watts*		F = Standard (155°F)		4 = Completely Encapsulated Coil (With Conduit Boss Housing)		18″		05 = 120/60* 10 = 208/60*	15 = 240/60*		Series Designation

AF4 series coil used on 34E24C2-R1021E.
*AF4 available in 120/60, 208/60, or 240/60 ONLY. 240/60 may require minimum order quantity.

DISCHARGE BYPASS VALVES

SELECTION PROCEDURES

The selection of a discharge bypass valve, and the necessary companion devices, is simplified ***if complete system information is available.*** This will result in the most economical selection because the components will match the system requirements.

Besides the discharge bypass valve, a specific application may require a hot gas solenoid valve, an auxiliary side connection distributor or ASC adapter, and a desuperheating TEV with a companion liquid line solenoid valve. Once the type of application (review Application Section) is determined, the necessary valves can be selected from the information discussed in this section.

DISCHARGE BYPASS VALVES The selection of a Sporlan Discharge Bypass Valve involves five basic items:

1. **Refrigerant** - valve capacities vary considerably for different refrigerants.
2. **Minimum allowable evaporating temperature at the reduced load condition** - depending on the system, this value must be set to prevent coil icing and/or compressor short cycling. For example, this may be 32°F - 34°F for a water chiller; 26°F - 28°F for a normal air conditioning system; and, the freezing temperature of the specific product for a refrigeration system.
3. **Compressor capacity (tons) at minimum allowable evaporating temperature** - consult compressor capacity ratings for this value.
4. **Minimum evaporator load (tons) at which the system is to be operated** - most systems are **not** required to operate down to zero load but this value will depend on the type of system. For example, most air conditioning systems only need to operate down to 15-25% of full load. However, air conditioning systems for data processing and "white" rooms, and most refrigeration systems may be required to bypass to zero load conditions.
5. **Condensing temperature when minimum load exists** - since the capacity ratings of the bypass valves are a function of condensing temperature, it is vital that proper head pressure is maintained, especially during low load operation. As the capacity table indicates, a condensing temperature of 80°F is considered the minimum allowable for satisfactory system operation. See Bulletin 90-30 for information on Sporlan's Head Pressure Control Valves.

The discharge bypass valve must be selected to handle the difference between items 3 and 4 above. If the minimum evaporator load (item 4) is zero, the hot gas bypass requirement is simply the compressor capacity at the minimum allowable evaporating temperature (item 3). The following discussion on Capacity Ratings and the Example show how these factors affect a selection on a typical air conditioning system.

Capacity Ratings – As the Discharge Bypass Valve Capacity Table indicates, valve ratings are dependent on the evaporating and condensing temperature ***at the reduced load condition*** and the refrigerant used. Therefore, once this information and the hot gas bypass requirement in tons is determined, a discharge bypass valve can be selected.

Where two valve capacities are shown for the same conditions — one for the 0/30 adjustment range and another for the 0/80 adjustment range — the "0/30 psig" valve should be used because of its greater capacity. Both values are listed as an aid in selecting a valve for a system with operating conditions between those shown.

As the capacity table heading indicates, these are ***valve*** capacities, ***not*** the system capacity on which the valve is applied. The ratings are the sum of the hot gas bypassed and the liquid refrigerant for desuperheating, regardless of whether the liquid is fed through the system TEV or the auxiliary desuperheating TEV. The capacities are based on an evaporator temperature change of 6°F from a closed position to the rated opening. This is a nominal rating value based on years of application experience. Since a discharge bypass valve is actually a ***pressure*** regulating valve, it should be pointed out that the capacity ratings based on a 6°F evaporator temperature change take into account that a 6°F change @ 40°F on Refrigerant 22 is a 9.1 psi change, while on Refrigerant 12 it is only 5.7 psi. The 6°F nominal change is used so all the various pressure changes do not need to be shown in the table. If additional capacity is required and a greater evaporator temperature change can be tolerated, these valves are capable of opening further. The following table lists various capacity multipliers for this purpose. For example, an ADRHE-6-0/80 rated for 9.58 tons at a 26°F evaporating temperature will start to open at 32°F (26° + 6°); and, when the evaporating temperature has dropped to 26°F, the valve will be open far enough to bypass 9.9 tons of hot gas. If a temperature change of 8°F can be tolerated, the valve would start opening at 34°F (26° + 8°) and be open far enough to bypass 9.9 times 1.15 or 11.39 tons of hot gas.

Occasionally, a bypass valve is selected for an evaporator temperature change of less than 6°F. Multipliers for those situations are also given in the table below.

CAPACITY MULTIPLIERS
for Evaporator Temperature Changes Other Than 6°F Nominal Change

EVAPORATOR TEMPERATURE CHANGE – °F	REFRIGERANT	EVAPORATOR TEMPERATURE – °F			
		40	26	20	0 and below
2	134a, 401A	0.65	0.65	0.65	0.65
	22, 402A, 404A, 407C, 507	0.72	0.70	0.70	
4	134a, 401A	0.80	0.80	0.80	0.74
	22, 402A, 404A, 407C, 507	0.87	0.85	0.85	
8	134a, 401A	1.11	1.11	1.11	1.09
	22, 402A, 404A, 407C, 507	1.17	1.15		
10	134a, 401A	1.22	1.20	1.19	1.11
	22, 402A, 404A, 407C, 507	1.34	1.27	1.25	

Example – Select a discharge bypass valve for a 30 ton Refrigerant 22 air conditioning system with 67% cylinder unloading (4 of 6 cylinders unloaded). Normal operating conditions are 45°F evaporating temperature and 120°F condensing temperature with a ***minimum*** condensing temperature of 80°F due to head pressure control.

When the evaporator load drops below the last step of cylinder unloading, it is necessary to keep the system on-the-line to maintain proper space temperatures, and avoid frosting of the coil. From the compressor manufacturer's capacity table, the compressor capacity in tons at the minimum allowable evaporating temperature is approximately 10 tons. If the system had to be on-the-line down to zero load, the bypass valve would have to bypass 10 tons of hot gas. With the necessary system factors — R-22, 26°F evaporating temperature at the reduced load condition, and 80°F condensing temperature — the capacity table is checked for a valve which can handle the ***10 tons bypass capacity:***

The DRHE-6-55/70 AR has a capacity of 13.1 tons at these conditions. Therefore, if the system must operate to zero load, this would be the proper selection.

However, if the minimum evaporator load is 4.5 tons (15% of total system capacity), an ADRPE-3-0/80 would be the proper selection (valve capacity of 4.86 tons). The only additional information necessary is the valve connections. While various connections are available, the proper valve connections must be selected to match the system's piping requirements.

DISCHARGE BYPASS VALVES

DIRECT ACTING DISCHARGE BYPASS VALVE CAPACITIES – Tons

Capacities based on discharge temperatures 50°F above isentropic compression, 25°F superheat at the compressor, 10°F subcooling, and includes both the hot gas bypassed and liquid refrigerant for desuperheating, regardless of whether the liquid is fed through the system thermostatic expansion valves or an auxiliary desuperheating thermostatic expansion valve.

REFRIGERANT	VALVE TYPE	ADJUSTMENT RANGE psig	MINIMUM ALLOWABLE EVAPORATOR TEMPERATURE AT THE REDUCED LOAD – °F																	
			40			26			20			0			-20			-40		
			CONDENSING TEMPERATURE – °F																	
			80	100	120	80	100	120	80	100	120	80	100	120	80	100	120	80	100	120
ADJUSTABLE MODELS																				
22	ADRI-1-1/4 ADRIE-1-1/4	0/55	–	–	–	0.34	0.44	0.56	0.41	0.52	0.66	0.49	0.63	0.79	0.46	0.59	0.75	0.43	0.56	0.70
		0/75	0.45	0.58	0.73	0.50	0.64	0.81	0.50	0.65	0.81	0.47	0.60	0.76	0.39	0.50	0.63	0.33	0.42	0.54
		0/100	0.41	0.53	0.67	0.42	0.54	0.67	0.41	0.53	0.66	0.38	0.49	0.62	0.34	0.44	0.56	0.31	0.40	0.50
	ADRS-2 ADRSE-2	0/30	–	–	–	–	–	–	–	–	–	3.02	3.90	4.91	2.91	3.75	4.74	2.81	3.63	4.58
		0/80	2.73	3.51	4.42	2.77	3.57	4.50	2.79	3.59	4.53	2.84	3.66	4.61	2.83	3.65	4.60	2.71	3.50	4.42
	ADRP-3 ADRPE-3	0/30	–	–	–	–	–	–	–	–	–	5.73	7.38	9.31	5.78	7.45	9.41	5.47	7.07	8.94
		0/80	4.65	5.99	7.54	4.86	6.26	7.88	4.95	6.37	8.03	5.13	6.61	8.34	5.14	6.64	8.38	4.98	6.43	8.13
	ADRHE-6	0/30	–	–	–	–	–	–	–	–	–	10.8	13.9	17.6	10.9	14.1	17.8	10.5	13.5	17.1
		0/80	7.12	9.16	11.5	7.69	9.90	12.5	7.92	10.2	12.8	8.44	10.9	13.7	8.55	11.0	13.9	8.24	10.6	13.5
134a	ADRI-1-1/4 ADRIE-1-1/4	0/55	0.30	0.40	0.51	0.31	0.41	0.53	0.31	0.41	0.53	0.29	0.38	0.49	–	–	–	–	–	–
		0/75	0.32	0.43	0.55	0.30	0.39	0.50	0.28	0.37	0.48	0.23	0.31	0.40	–	–	–	–	–	–
		0/100	0.26	0.34	0.44	0.24	0.32	0.41	0.24	0.31	0.40	0.21	0.28	0.36	–	–	–	–	–	–
	ADRS-2 ADRSE-2	0/30	–	–	–	1.97	2.60	3.34	1.94	2.56	3.30	1.87	2.46	3.18	–	–	–	–	–	–
		0/80	2.02	2.67	3.43	1.85	2.44	3.15	1.85	2.44	3.15	–	–	–	–	–	–	–	–	–
	ADRP-3 ADRPE-3	0/30	–	–	–	3.75	4.95	6.38	3.76	4.96	6.39	3.70	4.89	6.31	–	–	–	–	–	–
		0/80	3.74	4.94	6.37	3.35	4.42	5.70	3.36	4.43	5.71	–	–	–	–	–	–	–	–	–
	ADRHE-6	0/30	–	–	–	7.09	9.36	12.1	7.09	9.37	12.1	7.12	9.41	12.1	–	–	–	–	–	–
		0/80	7.07	9.34	12.0	5.50	7.26	9.36	5.53	7.31	9.41	–	–	–	–	–	–	–	–	–
401A	ADRI-1-1/4 ADRIE-1-1/4	0/55	0.34	0.45	0.57	0.36	0.47	0.60	0.36	0.47	0.59	0.34	0.44	0.56	–	–	–	–	–	–
		0/75	0.37	0.48	0.61	0.34	0.45	0.57	0.33	0.42	0.54	0.27	0.36	0.45	–	–	–	–	–	–
		0/100	0.30	0.39	0.49	0.28	0.37	0.47	0.27	0.36	0.45	0.25	0.32	0.41	–	–	–	–	–	–
	ADRS-2 ADRSE-2	0/30	–	–	–	2.28	2.97	3.77	2.26	2.93	3.72	2.18	2.83	3.59	–	–	–	–	–	–
		0/80	2.12	2.76	3.50	2.14	2.79	3.54	2.15	2.79	3.54	2.11	2.74	3.48	–	–	–	–	–	–
	ADRP-3 ADRPE-3	0/30	–	–	–	4.36	5.66	7.19	4.36	5.67	7.20	4.32	5.62	7.14	–	–	–	–	–	–
		0/80	3.81	4.95	6.28	3.88	5.04	6.40	3.90	5.06	6.43	3.85	5.01	6.36	–	–	–	–	–	–
	ADRHE-6	0/30	–	–	–	8.23	10.7	13.6	8.24	10.7	13.6	8.30	10.8	13.7	–	–	–	–	–	–
		0/80	6.15	7.99	10.1	6.36	8.26	10.5	6.41	8.32	10.6	6.40	8.32	10.6	–	–	–	–	–	–
402A	ADRI-1-1/4 ADRIE-1-1/4	0/55	–	–	–	–	–	–	–	–	–	0.52	0.66	0.81	0.55	0.69	0.85	0.51	0.64	0.78
		0/75	–	–	–	0.52	0.65	0.80	0.55	0.70	0.85	0.57	0.72	0.88	0.50	0.63	0.77	0.41	0.52	0.63
		0/100	0.43	0.54	0.65	0.47	0.60	0.73	0.48	0.60	0.74	0.46	0.57	0.70	0.41	0.52	0.64	0.37	0.47	0.57
	ADRS-2 ADRSE-2	0/30	–	–	–	–	–	–	–	–	–	–	–	–	3.35	4.22	5.17	3.22	4.06	4.98
		0/80	–	–	–	3.10	3.91	4.79	3.12	3.93	4.81	3.18	4.00	4.90	3.21	4.04	4.96	3.14	3.96	4.85
	ADRP-3 ADRPE-3	0/30	–	–	–	–	–	–	–	–	–	–	–	–	6.44	8.11	9.94	6.41	8.08	9.91
		0/80	–	–	–	5.29	6.66	8.16	5.38	6.78	8.30	5.69	7.16	8.77	5.82	7.33	8.98	5.73	7.23	8.86
	ADRHE-6	0/30	–	–	–	–	–	–	–	–	–	–	–	–	12.2	15.3	18.6	12.3	15.5	18.8
		0/80	–	–	–	8.16	10.3	12.6	8.43	10.6	13.0	9.26	11.7	14.3	9.65	12.2	14.9	9.59	12.1	14.8
404A & 507	ADRI-1-1/4 ADRIE-1-1/4	0/55	–	–	–	–	–	–	–	–	–	0.53	0.67	0.83	0.54	0.68	0.84	0.49	0.63	0.77
		0/75	–	–	–	0.53	0.67	0.83	0.55	0.71	0.87	0.56	0.71	0.87	0.48	0.61	0.75	0.39	0.50	0.62
		0/100	0.43	0.55	0.68	0.47	0.60	0.74	0.47	0.60	0.74	0.44	0.56	0.70	0.40	0.51	0.63	0.36	0.45	0.56
	ADRS-2 ADRSE-2	0/30	–	–	–	–	–	–	–	–	–	–	–	–	3.29	4.17	5.15	3.16	4.01	4.95
		0/80	–	–	–	3.08	3.91	4.82	3.10	3.93	4.85	3.15	4.00	4.93	3.17	4.02	4.96	3.08	3.90	4.82
	ADRP-3 ADRPE-3	0/30	–	–	–	–	–	–	–	–	–	–	–	–	6.38	8.08	9.97	6.27	7.95	9.81
		0/80	–	–	–	5.28	6.70	8.26	5.38	6.81	8.41	5.65	7.16	8.84	5.75	7.28	9.00	5.63	7.13	8.80
	ADRHE-6	0/30	–	–	–	–	–	–	–	–	–	–	–	–	12.0	15.3	18.7	12.1	15.4	18.9
		0/80	–	–	–	8.19	10.4	12.8	8.45	10.7	13.2	9.23	11.7	14.4	9.53	12.1	14.9	9.4	11.9	14.7
407C	ADRI-1-1/4 ADRIE-1-1/4	0/55	–	–	–	0.48	0.61	0.77	0.54	0.69	0.86	0.58	0.74	0.93	0.53	0.68	0.85	–	–	–
		0/75	0.61	0.78	0.97	0.61	0.78	0.97	0.60	0.77	0.96	0.53	0.68	0.85	0.43	0.56	0.69	–	–	–
		0/100	0.51	0.65	0.81	0.50	0.63	0.79	0.48	0.62	0.77	0.44	0.56	0.70	0.39	0.50	0.62	–	–	–
	ADRS-2 ADRSE-2	0/30	–	–	–	–	–	–	–	–	–	3.52	4.51	5.63	3.38	4.33	5.41	–	–	–
		0/80	3.32	4.25	5.30	3.32	4.25	5.30	3.33	4.27	5.32	3.36	4.31	5.38	3.30	4.23	5.28	–	–	–
	ADRP-3 ADRPE-3	0/30	–	–	–	–	–	–	–	–	–	6.74	8.63	10.8	6.74	8.64	10.8	–	–	–
		0/80	5.86	7.50	9.36	5.86	7.50	9.36	5.95	7.61	9.50	6.10	7.81	9.75	6.02	7.71	9.63	–	–	–
	ADRHE-6	0/30	–	–	–	–	–	–	–	–	–	12.7	16.3	20.3	12.8	16.5	20.5	–	–	–
		0/80	9.43	12.1	15.1	9.43	12.1	15.1	9.67	12.4	15.5	10.1	13.0	16.2	10.1	12.9	16.1	–	–	–

DISCHARGE BYPASS VALVES

ADJUSTABLE "REMOTE BULB" DISCHARGE BYPASS VALVE CAPACITIES – Tons

Capacities based on discharge temperatures 50°F above isentropic compression, 25°F superheat at the compressor, 10°F subcooling, and includes both the hot gas bypassed and liquid refrigerant for desuperheating, regardless of whether the liquid is fed through the system thermostatic expansion valves or an auxiliary desuperheating thermostatic expansion valve.

REFRIGERANT	VALVE TYPE	ADJUSTMENT RANGE psig	MINIMUM ALLOWABLE EVAPORATOR TEMPERATURE AT THE REDUCED LOAD – °F																	
			40			26			20			0			-20			-40		
			CONDENSING TEMPERATURE – °F																	
			80	100	120	80	100	120	80	100	120	80	100	120	80	100	120	80	100	120
*ADJUSTABLE "REMOTE BULB" MODELS																				
22	DRHE-6	55/70	14.9	19.8	24.6	13.1	16.9	21.2	These models are recommended for air conditioning temperature ranges only.											
134a	DRHE-6	25/35	7.30	9.64	12.4	6.29	8.31	10.7												
401A	DRHE-6	32/44	8.43	11.0	13.9	7.30	9.49	12.0												
404A	DRHE-6	65/80	–	–	–	16.9	21.4	25.3												
407C	DRHE-6	55/70 or 32/44	17.7	22.9	27.9	15.1	19.3	23.9												

*The DRP(E) adjustable remote bulb is obsolete. It may be replaced with the ADRP(E) adjustable model.

PILOT OPERATED DISCHARGE BYPASS VALVE CAPACITIES – Tons

Capacities based on discharge temperatures 50°F above isentropic compression, 25°F superheat at the compressor, 10°F subcooling, and includes both the hot gas bypassed and liquid refrigerant for desuperheating, regardless of whether the liquid is fed through the system thermostatic expansion valves or an auxiliary desuperheating thermostatic expansion valve. Valve capacity is based on the valve stroked fully open.

REFRIGERANT	VALVE TYPE	MINIMUM ALLOWABLE EVAPORATOR TEMPERATURE AT THE REDUCED LOAD – °F																	
		40			26			20			0			-20			-40		
		CONDENSING TEMPERATURE – °F																	
		80	100	120	80	100	120	80	100	120	80	100	120	80	100	120	80	100	120
ADJUSTABLE MODELS																			
22	SHGB-8 SHGBE-8	11.5	15.5	19.9	12.1	15.8	20.1	12.2	15.9	20.1	12.4	16.1	20.3	12.5	16.2	20.5	12.7	16.4	20.8
	SHGB-15 SHGBE-15	43.0	61.0	80.9	47.4	64.7	84.5	48.7	65.9	85.6	52.6	69.6	89.3	55.3	72.5	92.3	57.4	74.9	95.1
134a	SHGB-8 SHGBE-8	7.9	10.8	14.0	8.2	10.9	14.0	8.2	10.9	14.0	8.3	11.0	14.1	–	–	–	–	–	–
	SHGB-15 SHGBE-15	30.6	44.2	59.5	33.2	46.4	61.3	34.1	47.1	62.0	36.4	49.2	64.1	–	–	–	–	–	–
401A	SHGB-8 SHGBE-8	7.8	10.6	13.8	8.0	10.7	13.9	8.1	10.7	13.9	8.2	10.8	14.0	–	–	–	–	–	–
	SHGB-15 SHGBE-15	29.6	42.9	58.1	32.4	45.4	60.2	33.3	46.1	60.9	35.7	48.3	63.3	–	–	–	–	–	–
402A	SHGB-8 SHGBE-8	12.7	16.9	21.1	13.4	17.2	21.2	13.5	17.2	21.2	13.6	17.3	21.4	13.8	17.4	21.5	13.9	17.6	21.7
	SHGB-15 SHGBE-15	47.6	66.6	85.8	52.5	70.4	88.8	54.0	71.6	90.1	57.7	75.2	93.8	60.8	77.9	96.5	62.9	80.1	98.9
404A & 507	SHGB-8 SHGBE-8	13.0	17.2	21.5	13.5	17.5	21.6	13.6	17.5	21.6	13.8	17.6	21.8	13.9	17.6	21.8	14.0	17.7	22.0
	SHGB-15 SHGBE-15	48.6	67.9	87.8	53.2	71.6	90.9	54.8	72.9	91.9	58.8	76.6	95.5	61.5	78.9	97.7	63.4	80.8	100.0
407C	SHGB-8 SHGBE-8	11.7	15.9	20.5	12.2	16.1	20.6	12.2	16.1	20.6	12.4	16.3	20.8	12.5	16.4	21.0	–	–	–
	SHGB-15 SHGBE-15	44.6	64.0	85.5	48.8	67.7	88.8	50.1	68.8	89.7	53.8	72.1	93.3	56.3	74.7	96.1	–	–	–

DISCHARGE BYPASS VALVES

Operation

Direct Acting Valves — HGBE-5

Sporlan DBVs respond to changes in downstream or suction pressure. See Figure 7. When the evaporating pressure is above the valve setting, the valve remains closed. As the suction pressure drops below the valve setting, the valve responds and begins to open. As with all modulating type valves, the amount of opening is proportional to the change in the variable being controlled — in this case the suction pressure. As the suction pressure continues to drop, the valve continues to open until the limit of the valve stroke is reached. However, on normal applications there is not sufficient pressure change to open these valves to the limit of their stroke. The amount of pressure change from the point at which it is desired to have the valve closed, to the point at which it is to open, varies widely with the type of refrigerant used and the evaporating temperature. For this reason Sporlan DBVs are rated on the basis of allowable evaporator temperature change from closed position to rated opening. For direct acting valves, a 6°F (3.3°C) change is considered normal for most applications and is the basis of our capacity ratings. Multipliers for other temperature changes are given in the Selection Procedures section.

Desuperheating Thermostatic Expansion Valves

For information on desuperheating thermostatic expansion valves visit our website at www.sporlan.com and reference Bulletin 90-40 or consult Sporlan Division of Parker, Washington, MO.

Adjustment Ranges Pressure Setting

Adjustable Spring Heads on Direct Acting Valves

The adjustable type utilizes a spring assembly which can be fixed at the desired pressure setting (opening pressure). This setting will not be affected by other factors such as ambient or hot gas temperatures. The HGBE-5 is available with an adjustment range of 95/115 psig (6.6/7.93 bar). The standard factory setting for this valve is 105 psig (7.24 bar).

Pilot Operated Valves

The HGBE-8 is adjustable from 75 to 150 psi (5.2 to 10.3 bar). The standard factory setting is 110 psig (7.58 bar). Adjustment is made by turning the adjustment screw on the pilot valve. Turning this screw clockwise will increase the valve's setting and a counterclockwise rotation will decrease the valve's setting.

Adjusting these valves can be complicated because the load must be varied during the setting procedure. The load on the system must be decreased to lower the suction pressure so that the valve can control. The valve should then be adjusted to maintain the desired pressure. The load on the system should then be increased to raise the suction pressure above the valve setting to close the valve. Once this is accomplished, the valve setting can be checked by slowly decreasing the load until the discharge bypass valve begins to open (a hissing sound and/or an accompanying pressure rise at the outlet connection will indicate that the bypass valve has opened).

Specifications

VALVE TYPE	STANDARD COPPER CONNECTIONS ODF - Inches	PORT SIZE		ADJUSTMENT RANGE		BODY MATERIAL	SEATING MATERIAL	SOCKET DEPTH		EXTERNAL EQUALIZER ODF Inches	NET WEIGHT	
		Inches	mm	psi	bar			Inches	mm		lbs.	kg
HGB-5	3/8	1/2	13	95/115	6.6/7.93	Brass	Synthetic Metal	0.31	7.9	1/4	1.25	0.57
HGBE-5	1/2							0.37	9.4			
	5/8							0.50	12.7			
HGB-8	7/8	0.43	11	75/150	5.2/10.3			0.75	19	1/4	3.0	1.4
HGBE-8	1-1/8							0.91	23			

■ Maximum working pressure of 680 psig (46.9 bar) ■ Maximum Fluid Temperature of 240°F (116°C). ■ Maximum Ambient Temperature of 120°F (48.9°C).

Capacity Multipliers

For Evaporator Temperature Changes Other Than 6°F (3.3°C) Nominal Change

Tons ■ psi ■ °F

EVAPORATOR TEMPERATURE CHANGE °F	EVAPORATOR TEMPERATURE °F		
	40	26	20
2	0.45	0.40	0.38
4	0.82	0.78	0.76
8	1.08	1.11	1.13
10	1.11	1.17	1.20

Direct Acting Discharge Bypass Valve Capacities

Tons ■ psi ■ °F

VALVE TYPE	ADJUSTMENT RANGE (psig)	MINIMUM ALLOWABLE EVAPORATOR TEMPERATURE AT REDUCED LOAD °F								
		40			26			20		
		CONDENSING TEMPERATURE °F								
		80	100	120	80	100	120	80	100	120
HGBE-5	95/115	4.27	5.43	6.76	4.29	5.46	6.80	4.30	5.47	6.81

Pilot Operated Discharge Bypass Valve Capacities

Tons ■ psi ■ °F

VALVE TYPE	ADJUSTMENT RANGE (psig)	MINIMUM ALLOWABLE EVAPORATOR TEMPERATURE AT REDUCED LOAD °F								
		40			26			20		
		CONDENSING TEMPERATURE °F								
		80	100	120	80	100	120	80	100	120
HGB-8	95/115	18.9	25.2	31.9	19.8	25.8	32.2	20.2	25.9	32.3
HGBE-8										

Capacities based on discharge temperatures 50°F (28°C) above isentropic compression, 25°F (14°C) superheat at the compressor, 10°F (5°C) subcooling, and includes both the hot gas bypassed and liquid refrigerant for desuperheating, regardless of whether the liquid is fed through the system thermostatic expansion valves or an auxiliary desuperheating thermostatic expansion valve.

HEAD PRESSURE CONTROL VALVES
SPORLAN

Sporlan Head Pressure Control for systems with air cooled condensers can be accomplished with any of the three valve combinations - the ORI/ORD, the OROA-5 and the LAC-4. The non-adjustable ORD-4 is used with the adjustable ORI valves. All valves have been designed specifically for head pressure control.

CAPACITIES - Ratings for the common refrigerants are given at several pressure drops for the ORI's, OROA, and LAC below. Maximum capacities for the ORD-4 are given below also. Normally, a 2 psi pressure drop across the ORI or OROA is recommended; however, this can be exceeded provided the total pressure drop through the condenser and ORI or OROA does not exceed 14 psi.



HEAD PRESSURE CONTROL VALVE CAPACITIES
High Ambient (SUMMER) Capacities - Tons of Refrigeration

Capacities are based on 0°F evaporator temperature.

Refrigerant	Pressure Drop Across Valve (psi)	Valve Type							
		LAC-4	LAC-5	LAC-10	ORI-6	ORI-10	OROA-5	ORIT-15	ORIT-20
22	1	2.72	5.82	12.4	7.79	20.8	11.0	---	---
	2	3.80	8.24	17.2	11.3	28.7	15.5	---	---
	3	4.63	10.1	20.8	14.1	34.7	19.0	---	---
	4	5.32	11.7	23.9	16.5	39.7	21.9	35.3	82.8
	5	5.92	13.0	26.5	18.6	44.0	24.5	46.7	149
	6	6.47	14.3	28.9	20.5	47.9	26.8	58.7	163
	8	7.43	16.5	33.2	23.9	54.8	30.9	84.2	189
	10	8.28	18.4	36.8	27.0	60.8	34.5	94.8	212
134a	1	2.46	5.28	11.2	5.26	13.0	9.98	---	---
	2	3.45	7.47	15.6	7.65	18.0	14.1	---	---
	3	4.19	9.15	18.9	9.52	21.7	17.2	---	---
	4	4.82	10.6	21.6	11.1	24.9	19.8	31.9	75.1
	5	5.37	11.8	24.0	12.5	27.6	22.2	42.3	135
	6	5.86	12.9	26.2	13.8	30.0	24.3	53.1	148
	8	6.73	14.9	30.0	16.2	34.3	28.0	76.3	171
	10	7.50	16.7	33.4	18.2	38.1	31.2	85.9	192
404A	1	1.78	3.81	8.14	5.53	15.3	7.21	---	---
	2	2.49	5.39	11.3	8.05	21.2	10.2	---	---
	3	3.03	6.60	13.7	10.0	25.6	12.4	---	---
	4	3.49	7.62	15.7	11.7	29.2	14.3	23.1	54.1
	5	3.88	8.52	17.4	13.2	32.4	16.0	30.6	96.9
	6	4.24	9.33	19.0	14.6	35.3	17.5	38.5	106
	8	4.87	10.8	21.8	17.0	40.4	20.2	55.2	123
	10	5.43	12.1	24.2	19.2	44.8	22.6	62.2	138
507	1	1.73	3.70	7.90	5.46	15.1	7.01	---	---
	2	2.42	5.24	11.0	7.94	20.9	9.88	---	---
	3	2.95	6.42	13.3	9.88	25.2	12.1	---	---
	4	3.39	7.41	15.2	11.5	28.8	13.9	22.5	52.6
	5	3.77	8.29	16.9	13.0	32.0	15.6	29.7	94.3
	6	4.12	9.08	18.5	14.4	34.8	17.0	37.4	104
	8	4.74	10.5	21.2	16.8	39.8	19.6	53.6	120
	10	5.28	11.7	23.5	18.9	44.2	21.9	60.5	134

SPECIFICATIONS

Valve Type	Standard Factory Setting (psig)	Connections ODF Solder (Inches)		LIST
		Inlet(s)	Outlet	
LAC-4	100, 180, or 210	1/4	1/4	-
		3/8	3/8	$594.00
		1/2	1/2	$718.00
LAC-4-DS		3/8	3/8	-
		1/2	1/2	-
LAC-5		1/2	1/2	$633.00
		5/8	5/8	-
		7/8	7/8	-
		1-1/8	1-1/8	
LAC-10		① 1-3/8 ② 7/8	7/8	-
		① 1-3/8 ② 1-1/8	1-1/8	-
ORI-6-65/225-H	120	5/8	5/8	-
		7/8	7/8	-
		1-1/8	1-1/8	-
ORI-10-65/225-H	120	1-1/8	1-1/8	$2,334.00
		1-3/8	1-3/8	$2,334.00
ORD-4-20	20	5/8	5/8	$348.00
OROA-5	100, 180, or 210	① 5/8 ② 5/8	5/8	-
		① 5/8 ② 7/8	7/8	-
ORIT-15-65/225	150	1-3/8	1-3/8	Obsolete
ORIT-20-65/225	150	1-5/8	1-5/8	Obsolete
CROT-12-65/225	140	1-1/8	1-1/8	
CROT-15-65/225	140	1-3/8	1-3/8	

① Discharge Connection
② Condenser Connection

HEAD PRESSURE CONTROL VALVES

SPORLAN

HEAD PRESSURE CONTROL VALVE CAPACITIES

Low Ambient (WINTER) Capacities - Tons of Refrigeration

Capacities are based on 0°F evaporator temperature.

Refrigerant Valve Setting (psig)	Minimum Ambient Design Temp. °F	Pressure Drop Across Valve (psi)	Valve Type					
			LAC-4	LAC-5	LAC-10	ORD-4	ORIT-15 CROT-12	ORIT-20 CROT-15
22	-20	1	1.77	3.13	7.53	2.90	---	---
		2	2.49	4.43	10.6	4.09	---	---
		5	3.89	6.98	16.4	6.41	32.9	58.6
		10	5.44	9.84	22.8	8.95	46.3	82.6
		15	6.59	12.0	27.6	10.8	56.4	101
		20	7.54	13.8	31.4	12.3	64.7	116
		25	8.34	15.4	34.6	13.6	72.0	129
		30	9.05	16.8	37.4	14.7	78.4	141
	0	1	1.91	3.37	8.08	3.33	---	---
		2	2.68	4.77	11.3	4.70	---	---
		5	4.20	7.52	17.6	7.37	37.8	67.4
		10	5.86	10.6	24.5	10.3	53.2	95.0
		15	7.10	12.9	29.5	12.4	64.8	116
		20	8.12	14.9	33.6	14.2	74.4	133
		25	8.99	16.6	37.0	15.6	82.8	149
		30	9.75	18.1	40.0	16.8	90.2	162
	+20	1	2.09	3.68	8.79	4.00	---	---
		2	2.93	5.20	12.3	5.64	---	---
		5	4.59	8.21	19.1	8.85	45.4	80.8
		10	6.40	11.6	26.5	12.3	63.8	114
		15	7.75	14.1	31.9	14.9	77.8	139
		20	8.86	16.2	36.3	17.0	89.3	160
		25	9.81	18.1	40.0	18.7	99.3	179
		30	10.6	19.7	43.2	20.2	108	195
134a	-20	1	1.47	2.61	6.30	2.29	---	---
		2	2.07	3.69	8.82	3.22	---	---
		5	3.23	5.82	13.7	5.02	25.9	46.2
		10	4.49	8.17	18.9	6.95	36.3	65.0
		15	5.41	9.95	22.6	8.32	44.1	79.2
		20	6.15	11.4	25.6	9.39	50.5	91.0
		25	6.77	12.7	28.0	10.3	55.9	101
		30	7.30	13.8	30.0	11.0	60.7	110
	0	1	1.60	2.84	6.81	2.63	---	---
		2	2.25	4.01	9.54	3.70	---	---
		5	3.51	6.31	14.8	5.78	29.8	53.2
		10	4.88	8.87	20.4	8.00	41.8	74.8
		15	5.88	10.8	24.4	9.58	50.7	91.2
		20	6.69	12.4	27.6	10.8	58.1	105
		25	7.36	13.8	30.2	11.8	64.4	117
		30	7.94	15.0	32.3	12.6	69.9	127
	+20	1	1.78	3.14	7.51	3.18	---	---
		2	2.50	4.44	10.5	4.48	---	---
		5	3.89	6.99	16.3	6.99	36.0	64.2
		10	5.41	9.82	22.4	9.67	50.5	90.4
		15	6.51	12.0	26.8	11.6	61.3	110
		20	7.40	13.7	30.3	13.1	70.2	127
		25	8.15	15.2	33.1	14.3	77.8	141
		30	8.79	16.6	35.5	15.2	84.5	154

Refrigerant Valve Setting (psig)	Minimum Ambient Design Temp. °F	Pressure Drop Across Valve (psi)	Valve Type					
			LAC-4	LAC-5	LAC-10	ORD-4	ORIT-15 CROT-12	ORIT-20 CROT-15
404A	-20	1	1.27	2.24	5.41	2.02	---	---
		2	1.78	3.17	7.59	2.85	---	---
		5	2.79	5.01	11.8	4.48	22.9	40.9
		10	3.91	7.06	16.5	6.26	32.3	57.6
		15	4.74	8.61	19.9	7.58	39.4	70.4
		20	5.43	9.91	22.7	8.65	45.3	81.1
		25	6.02	11.0	25.1	9.56	50.4	90.4
		30	6.54	12.1	27.2	10.3	55.0	98.8
	0	1	1.35	2.39	5.74	2.29	---	---
		2	1.90	3.38	8.05	3.23	---	---
		5	2.98	5.33	12.5	5.07	26.0	46.2
		10	4.17	7.51	17.5	7.09	36.6	65.2
		15	5.05	9.17	21.1	8.58	44.6	79.7
		20	5.78	10.6	24.0	9.79	51.2	91.8
		25	6.41	11.8	26.5	10.8	57.0	102
		30	6.97	12.8	28.7	11.7	62.2	112
	+20	1	1.46	2.58	6.18	2.70	---	---
		2	2.06	3.64	8.65	3.81	---	---
		5	3.22	5.75	13.5	5.99	30.7	54.6
		10	4.50	8.11	18.7	8.37	43.2	77.0
		15	5.45	9.90	22.6	10.1	52.6	94.1
		20	6.24	11.4	25.7	11.6	60.5	108
		25	6.92	12.7	28.4	12.8	67.3	121
		30	7.51	13.9	30.7	13.8	73.4	132
507	-20	1	1.24	2.21	5.31	2.01	---	---
		2	1.75	3.12	7.45	2.83	---	---
		5	2.75	4.92	11.6	4.45	22.8	40.6
		10	3.84	6.94	16.2	6.22	32.1	57.2
		15	4.66	8.47	19.6	7.53	39.1	69.9
		20	5.34	9.74	22.3	8.59	45.0	80.5
		25	5.92	10.9	24.6	9.50	50.0	89.8
		30	6.43	11.9	26.7	10.3	54.6	98.1
	0	1	1.34	2.37	5.68	2.31	---	---
		2	1.88	3.34	7.96	3.26	---	---
		5	2.95	5.28	12.4	5.12	26.2	46.7
		10	4.13	7.44	17.3	7.16	36.9	65.9
		15	5.01	9.08	20.8	8.67	45.0	80.5
		20	5.73	10.5	23.8	9.89	51.7	92.7
		25	6.35	11.7	26.2	10.9	57.6	103
		30	6.90	12.7	28.4	11.8	62.8	113
	+20	1	1.46	2.57	6.15	2.78	---	---
		2	2.05	3.63	8.61	3.92	---	---
		5	3.21	5.73	13.4	6.16	31.6	56.2
		10	4.48	8.08	18.6	8.62	44.4	79.3
		15	5.44	9.87	22.5	10.4	54.2	96.8
		20	6.22	11.4	25.6	11.9	62.3	112
		25	6.90	12.7	28.3	13.2	69.3	124
		30	7.49	13.8	30.6	14.2	75.6	136

HEAD PRESSURE CONTROL VALVES
SPORLAN R410A

Selection Procedures

The actual selection of Sporlan Head Pressure Control Valves involves four basic items:

1. System capacity in tons
2. Refrigerant
3. Minimum ambient design temperature
4. Allowable pressure drop across the valve

When selecting these valves it is necessary to consider the valve's capacity when it is controlling at the minimum ambient design temperature. The minimum ambient design temperature is a factor because the bypassed discharge gas must heat the subcooled liquid leaving the condenser to maintain the receiver pressure. This subcooled liquid will approach the ambient temperature. It is the flow of the discharge gas and liquid mixture flowing through the valve at the minimum design ambient conditions that will determine the valve's capacity. Once the valve's capacity and pressure drop have been determined at minimum design ambient conditions, the capacity of the valve during high ambient conditions should be checked to determine the pressure drop of the valve with full liquid flow.

Example: Select a LAC valve for a 10 ton (35 kW), R-410A unit with a minimum design ambient temperature of -20°F (-28°C). The LAC-10 has a capacity of 12.8 tons (47.3 kW) at a 5 psi (0.35 bar) drop across the valve according to the Low Ambient Capacity table below. The LAC-10 also has a capacity of 11.4 tons (49.6 kW) at a 2 psi (0.21 bar) drop across the valve according to the High Ambient Capacity table below. The LAC-10 is the correct selection.

Dimensions

lbs. ▪ psi ▪ inches

VALVE SERIES	STANDARD FACTORY SETTING (psig)	CONNECTIONS ODF SOLDER (Inches)		DIMENSIONS (Inches)					WEIGHT (lbs.)	
		Inlet(s)	Outlet	A	B	C	D	E	Net	Ship
LAC-4	295	1/2	1/2	1.78	1.87	3.02	2.38	4.73	0.82	0.90
LAC-5		1/2	1/2	1.65	1.60	3.77	2.99	5.59	2.50	2.65
		5/8	5/8	1.74	1.69	3.86	3.08	5.68	2.55	2.70
LAC-10		① 1-3/8 ② 7/8	7/8	2.82	2.67	4.39	3.43	6.49	3.20	3.42
		① 1-3/8 ② 1-1/8	1-1/8		2.56	4.83	3.87	6.93	3.28	3.50

① Discharge connection.
② Condenser connection.

Capacities

Low Ambient (Winter)

Tons ▪ psi ▪ °F

VALVE TYPE	MINIMUM AMBIENT DESIGN TEMP. °F	PRESSURE DROP ACROSS VALVE – psi			
		1	2	5	10
LAC-4	-20	1.74	2.46	3.85	5.40
	0	1.88	2.65	4.16	5.82
	+20	2.06	2.90	4.54	6.35
LAC-5	-20	3.09	4.37	6.90	9.74
	0	3.33	4.71	7.44	10.5
	+20	3.63	5.14	8.11	11.4
LAC-10	-20	5.83	8.18	12.8	17.8
	0	6.27	8.79	13.7	19.0
	+20	6.82	9.56	14.9	20.7

Based on a R-410A valve setting of 295 psig (20.3 bar).
Capacities based on 0°F (-18°C) evaporator, 94°F (35°C) condenser, 10°F (6°C) subcooled liquid.

High Ambient (Summer)

Tons ▪ psi ▪ °F

VALVE TYPE	PRESSURE DROP ACROSS VALVE – psi				
	1	2	3	4	5
LAC-4	2.44	3.42	4.15	4.77	5.32
LAC-5	5.22	7.38	9.04	10.4	11.7
LAC-10	8.23	11.4	13.9	15.9	17.6

Capacities based on 0°F (-18°C) evaporator, 110°F (43°C) condenser, 10°F (6°C) subcooled liquid.

Nomenclature

LAC	–	5	–	295 HP	–	5/8	x	5/8	x	5/8	x	5/8
Valve Type Low Ambient Control		**Valve Size**		**Valve Setting(s) (psig)** Specify one setting for standard dome element.		**Discharge Connection** (Inches)		**Condenser Connection** (Inches)		**Receiver Connection** (Inches)		**Solder Connections**

CRANKCASE PRESSURE REGULATING VALVES

SPORLAN

CRO Capacities - Tons

Capacities based on 100°F condensing temperature, 10°F superheat, 0°F subcooling, and 1 psi pressure drop across valve port.

Connections - (Standard Connections are in **BOLD** type)
CRO-4, *CROT-4 - 3/8", **1/2"**, ODF Solder and 3/8", 1/2" SAE Flare
CRO-6, *CROT-6 - 5/8", **7/8"**, 1-1/8" ODF Solder and 1/2", 5/8" SAE Flare
CRO-10, *CROT-10 - 7/8", 1-1/8", **1-3/8"** ODF Solder



REFRIGERANT 22 - CAPACITIES – Tons
Capacities based on 100°F condensing temperature, 10°F superheat, and 0°F subcooling

Type and Adjustment Range	Design Evaporator Temperature °F	Saturated Suction Pressure – psig (Reference)	Pressure Drop Across Valve (psi)																	
			0.5						1						2					
			Valve Settings (psig)																	
			10	20	30	40	50	60	10	20	30	40	50	60	10	20	30	40	50	60
CRO-4 0/20	-40	0.6	0.09	0.09	–	–	–	–	0.13	0.13	–	–	–	–	0.17	0.20	–	–	–	–
	-30	4.9	0.09	0.11	–	–	–	–	0.13	0.15	–	–	–	–	0.17	0.20	–	–	–	–
	-20	10.2	–	0.12	–	–	–	–	–	0.17	–	–	–	–	–	0.23	–	–	–	–
	-10	16.5	–	0.11	–	–	–	–	–	0.15	–	–	–	–	–	0.21	–	–	–	–
CRO-4 0/50	-40	0.6	0.08	0.09	0.09	0.09	0.09	–	0.13	0.13	0.13	0.13	0.13	–	0.14	0.19	0.24	0.17	0.17	–
	-30	4.9	0.08	0.10	0.11	0.11	0.11	–	0.11	0.14	0.15	0.15	0.15	–	0.14	0.19	0.20	0.20	0.20	–
	-20	10.2	–	0.10	0.12	0.12	0.12	–	–	0.14	0.17	0.17	0.17	–	–	0.19	0.23	0.23	0.23	–
	-10	16.5	–	0.10	0.12	0.14	0.14	–	–	0.13	0.17	0.19	0.19	–	–	0.18	0.24	0.27	0.27	–
	0	24.0	–	–	0.12	0.15	0.16	–	–	–	0.16	0.21	0.22	–	–	–	0.22	0.29	0.30	–
	10	32.8	–	–	–	0.14	0.17	–	–	–	–	0.19	0.24	–	–	–	–	0.26	0.33	–
	20	43.1	–	–	–	–	0.15	–	–	–	–	–	0.21	–	–	–	–	–	0.29	–
CRO-4 0/75	-40	0.6	0.07	0.09	0.09	0.09	0.09	0.09	0.13	0.12	0.13	0.13	0.13	0.13	0.13	0.17	0.22	0.17	0.17	0.17
	-30	4.9	0.08	0.09	0.11	0.11	0.11	0.11	0.10	0.13	0.15	0.15	0.15	0.15	0.14	0.17	0.20	0.20	0.20	0.20
	-20	10.2	–	0.10	0.11	0.12	0.12	0.12	–	0.13	0.16	0.17	0.17	0.17	–	0.18	0.22	0.23	0.23	0.23
	-10	16.5	–	0.09	0.12	0.14	0.14	0.14	–	0.13	0.16	0.19	0.19	0.19	–	0.18	0.22	0.27	0.27	0.27
	0	24.0	–	–	0.11	0.14	0.16	0.16	–	–	0.16	0.19	0.22	0.22	–	–	0.22	0.29	0.30	0.30
	10	32.8	–	–	–	0.13	0.16	0.18	–	–	–	0.18	0.22	0.25	–	–	–	0.25	0.31	0.34
	20	43.1	–	–	–	–	0.14	0.17	–	–	–	–	0.20	0.25	–	–	–	–	0.28	034
	30	55.0	–	–	–	–	–	0.15	–	–	–	–	–	–	–	–	–	–	–	–

Type and Adjustment Range	Design Evaporator Temperature °F	Saturated Suction Pressure – psig (Reference)	Pressure Drop Across Valve (psi)																	
			0.5						1						2					
			Valve Settings (psig)																	
			10	20	30	40	50	60	10	20	30	40	50	60	10	20	30	40	50	60
CRO(T)-6 0/60	-40	0.6	0.26	0.39	0.52	0.64	0.64	0.64	0.36	0.54	0.72	0.89	0.89	0.89	0.46	0.71	0.97	1.21	1.21	1.21
	-20	10.2	–	0.36	0.52	0.69	0.84	0.84	–	0.49	0.72	0.96	1.18	1.18	–	0.66	0.97	1.32	1.62	1.62
	-10	16.5	–	0.29	0.47	0.66	0.84	0.95	–	0.39	0.66	0.92	1.18	1.34	–	0.52	0.90	1.27	1.65	1.85
	0	24.0	–	–	0.38	0.59	0.80	1.01	–	–	0.52	0.82	1.12	1.42	–	–	0.71	1.13	1.55	1.97
	10	32.8	–	–	–	0.45	0.69	0.92	–	–	–	0.63	0.96	1.30	–	–	–	0.86	1.33	1.81
	20	43.1	–	–	–	–	0.50	0.76	–	–	–	–	0.70	1.07	–	–	–	–	0.96	1.48
	30	55.0	–	–	–	–	–	0.50	–	–	–	–	–	0.70	–	–	–	–	–	0.96
CRO(T)-10 0/60	-40	0.6	0.75	1.40	1.40	1.40	1.40	1.40	1.06	1.98	1.98	1.98	1.98	1.98	1.48	2.78	2.78	2.78	2.78	2.78
	-20	10.2	–	1.02	1.83	1.83	1.83	1.83	–	1.43	2.58	2.58	2.58	2.58	–	2.01	3.63	3.63	3.63	3.63
	-10	16.5	–	0.41	1.58	2.07	2.07	2.07	–	0.58	2.23	2.92	2.92	2.92	–	0.80	3.15	4.11	4.11	4.11
	0	24.0	–	–	0.79	2.11	2.32	2.32	–	–	1.11	2.98	3.28	3.28	–	–	1.57	4.20	4.63	4.63
	10	32.8	–	–	–	1.06	2.54	2.60	–	–	–	1.50	3.58	3.67	–	–	–	2.11	5.06	5.18
	20	43.1	–	–	–	–	1.14	2.78	–	–	–	–	1.61	3.93	–	–	–	–	2.27	5.55
	30	55.0	–	–	–	–	–	0.93	–	–	–	–	–	1.31	–	–	–	–	–	1.84

Type and Adjustment Range	Design Evaporator Temperature °F	Saturated Suction Pressure – psig (Reference)	Pressure Drop Across Valve (psi)																	
			0.5						1						2					
			Valve Settings (psig)																	
			40	50	60	70	80	90	40	50	60	70	80	90	40	50	60	70	80	90
CRO(T)-6 30/110	0	24.0	0.48	0.62	0.76	0.90	1.05	1.07	0.66	0.87	1.07	1.27	1.47	1.51	0.91	1.19	1.48	1.76	2.04	2.10
	10	32.8	0.26	0.55	0.71	0.87	1.03	1.19	0.55	0.78	1.00	1.22	1.45	1.67	0.75	1.07	1.39	1.07	2.02	2.34
	20	43.1	–	0.44	0.61	0.79	0.97	1.14	–	0.61	0.86	1.11	1.36	1.61	–	0.84	1.19	1.54	1.90	2.25
	30	54.9	–	–	0.45	0.64	0.84	1.04	–	–	0.63	0.91	1.18	1.46	–	–	0.87	1.26	1.65	2.04
	40	68.6	–	–	–	0.42	0.64	0.85	–	–	–	0.59	0.90	1.20	–	–	–	0.81	1.24	1.67
CRO(T)-10 30/110	0	24.0	1.43	2.32	2.32	2.32	2.32	2.32	2.02	3.28	3.28	3.28	3.28	3.28	2.84	4.62	4.62	4.62	4.62	4.62
	10	32.8	0.72	1.72	2.60	2.60	2.60	2.60	1.02	2.43	3.67	3.67	3.67	3.67	1.43	3.42	5.18	5.18	5.18	5.18
	20	43.1	–	0.78	1.89	2.89	2.89	2.89	–	1.10	2.66	4.09	4.09	4.09	–	1.54	3.76	5.77	5.77	5.77
	30	54.9	–	–	0.64	1.86	3.09	3.21	–	–	0.90	2.63	4.37	4.53	–	–	1.25	3.71	6.17	6.40
	40	68.6	–	–	–	–	1.57	2.92	–	–	–	–	2.22	4.13	–	–	–	–	3.12	5.84

CRANKCASE PRESSURE REGULATING VALVES

SPORLAN

REFRIGERANT 134a - CAPACITIES – Tons

Capacities based on 100°F condensing temperature, 10°F superheat, and 0°F subcooling

Type and Adjustment Range	Design Evaporator Temperature °F	Saturated Suction Pressure – psig (Reference)	Pressure Drop Across Valve (psi)																	
			0.5						1						2					
			Valve Settings (psig)																	
			10	20	30	40	50	60	10	20	30	40	50	60	10	20	30	40	50	60
CRO-4 0/20	-40	*-14.7*	0.06	0.06	–	–	–	–	0.08	0.08	–	–	–	–	0.10	0.10	–	–	–	–
	-30	*9.7*	0.07	0.07	–	–	–	–	0.09	0.09	–	–	–	–	0.12	0.12	–	–	–	–
	-20	*3.6*	0.08	0.08	–	–	–	–	0.11	0.11	–	–	–	–	0.15	0.15	–	–	–	–
	-10	2.0	0.09	0.10	–	–	–	–	0.13	0.13	–	–	–	–	0.17	0.18	–	–	–	–
CRO-4 0/50	-40	*14.7*	0.06	0.06	0.06	0.06	–	–	0.07	0.08	0.08	0.08	0.08	–	0.09	0.10	0.10	0.10	0.10	–
	-30	*9.7*	0.06	0.07	0.07	0.07	–	–	0.09	0.09	0.09	0.09	0.09	–	0.11	0.12	0.12	0.12	0.12	–
	-20	*3.6*	0.07	0.08	0.08	0.08	0.08	–	0.10	0.11	0.11	0.11	0.11	–	0.12	0.15	0.15	0.15	0.15	–
	-10	2.0	0.07	0.09	0.10	0.10	0.10	–	0.10	0.13	0.13	0.13	0.13	–	0.13	0.17	0.18	0.18	0.18	–
	0	6.5	0.08	0.10	0.11	0.11	0.11	–	0.10	0.14	0.15	0.15	0.15	–	0.14	0.18	0.21	0.21	0.21	–
	10	12.0	–	0.10	0.12	0.13	0.13	–	–	0.14	0.17	0.18	0.18	–	–	0.19	0.24	0.24	0.24	–
	20	18.4	–	–	0.12	0.14	0.14	–	–	–	0.17	0.20	0.20	–	–	–	0.24	0.28	0.28	–
	30	26.1	–	–	–	0.15	0.16	–	–	–	0.16	0.21	0.23	–	–	–	0.22	0.28	0.32	–
CRO-4 0/75	-40	*14.7*	0.05	0.06	0.06	0.06	0.06	0.06	0.07	0.08	0.08	0.08	0.08	0.08	0.08	0.10	0.10	0.10	0.10	0.10
	-30	*9.7*	0.06	0.07	0.07	0.07	0.07	0.07	0.08	0.09	0.09	0.09	0.09	0.09	0.10	0.12	0.12	0.12	0.12	0.12
	-20	*3.6*	0.07	0.08	0.08	0.08	0.08	0.08	0.09	0.11	0.11	0.11	0.11	0.11	0.12	0.14	0.15	0.15	0.15	0.15
	-10	2.0	0.07	0.09	0.10	0.10	0.10	0.10	0.10	0.12	0.13	0.13	0.13	0.13	0.13	0.16	0.18	0.18	0.18	0.18
	0	6.5	0.07	0.09	0.11	0.11	0.11	0.11	0.10	0.13	0.15	0.15	0.15	0.15	0.14	0.17	0.21	0.21	0.21	0.21
	10	12.0	–	0.09	0.11	0.13	0.13	0.13	–	0.13	0.16	0.18	0.18	0.18	–	0.18	0.24	0.24	0.24	0.24
	20	18.4	–	–	0.12	0.14	0.14	0.14	–	–	0.16	0.19	0.20	0.20	–	–	0.22	0.27	0.28	0.28
	30	26.1	–	–	–	0.14	0.16	0.16	–	–	0.16	0.19	0.23	0.23	–	–	0.21	0.27	0.32	0.32
	40	35.0	–	–	–	0.13	0.16	0.18	–	–	–	0.18	0.22	0.26	–	–	–	–	0.31	0.36

Type and Adjustment Range	Design Evaporator Temperature °F	Saturated Suction Pressure – psig (Reference)	Pressure Drop Across Valve (psi)																	
			0.5						1						2					
			Valve Setting (psig)																	
			10	20	30	40	50	60	10	20	30	40	50	60	10	20	30	40	50	60
CRO(T)-6 0/60	-40	*14.7*	0.23	0.31	0.39	0.40	0.40	0.40	0.29	0.41	0.53	0.55	0.55	0.55	0.35	0.51	0.68	0.71	0.71	0.71
	-20	*3.6*	0.25	0.37	0.48	0.56	0.56	0.56	0.34	0.50	0.66	0.78	0.78	0.78	0.43	0.66	0.88	1.05	1.05	1.05
	-10	2.0	0.25	0.38	0.51	0.64	0.65	0.65	0.34	0.52	0.71	0.89	0.91	0.91	0.43	0.69	0.95	1.21	1.24	1.24
	0	6.5	0.22	0.37	0.52	0.67	0.76	0.76	0.30	0.51	0.73	0.94	1.05	1.05	0.38	0.68	0.98	1.28	1.45	1.45
	10	12.0	–	0.34	0.51	0.69	0.85	0.87	–	0.46	0.71	0.95	1.19	1.21	–	0.62	0.95	1.30	1.64	1.67
	20	18.4	–	0.26	0.45	0.65	0.84	0.99	–	0.35	0.63	0.90	1.18	1.38	–	0.47	0.85	1.24	1.63	1.92
	30	26.1	–	–	0.35	0.56	0.78	1.01	–	–	0.48	0.79	1.10	1.41	–	–	0.64	1.08	1.52	1.96
	40	35.0	–	–	–	0.42	0.67	0.71	–	–	–	0.58	0.93	0.99	–	–	–	0.79	1.28	1.38
CRO(T)-10 0/60	-40	*14.7*	0.88	0.90	0.90	0.90	0.90	0.90	1.23	1.26	1.26	1.26	1.26	1.26	1.72	1.76	1.76	1.76	1.76	1.76
	-20	*3.6*	0.82	1.23	1.23	1.23	1.23	1.23	1.16	1.74	1.74	1.74	1.74	1.74	1.61	2.44	2.44	2.44	2.44	2.44
	-10	2.0	0.65	1.43	1.43	1.43	1.43	1.43	0.92	2.02	2.02	2.02	2.02	2.02	1.28	2.83	2.83	2.83	2.83	2.83
	0	6.5	0.33	1.26	1.64	1.64	1.64	1.64	0.46	1.78	2.32	2.32	2.32	2.32	0.63	2.50	3.26	3.26	3.26	3.26
	10	12.0	–	0.86	1.88	1.88	1.88	1.88	–	1.21	2.65	2.65	2.65	2.65	–	1.70	3.74	3.74	3.74	3.74
	20	18.4	–	0.20	1.41	2.13	2.13	2.13	–	0.27	1.98	3.02	3.02	3.02	–	0.37	2.79	4.25	4.25	4.25
	30	26.1	–	–	0.54	1.91	2.41	2.41	–	–	0.76	2.70	3.42	3.42	–	–	1.07	3.81	4.81	4.81
	40	35.0	–	–	–	0.77	2.31	2.61	–	–	–	1.09	3.27	3.69	–	–	–	1.53	4.61	5.21

Type and Adjustment Range	Design Evaporator Temperature °F	Saturated Suction Pressure – psig (Reference)	Pressure Drop Across Valve (psi)																	
			0.5						1						2					
			Valve Settings (psig)																	
			40	50	60	70	80	90	40	50	60	70	80	90	40	50	60	70	80	90
CRO(T)-6 30/110	0	6.5	0.51	0.61	0.71	0.76	0.76	0.76	0.70	0.85	0.99	1.05	1.05	1.05	0.95	1.15	1.36	1.45	1.45	1.45
	10	12.0	0.52	0.64	0.75	0.87	0.87	0.87	0.72	0.89	1.05	1.21	1.21	1.21	0.99	1.21	1.44	1.67	1.67	1.67
	20	18.4	0.51	0.64	0.77	0.90	0.99	0.99	0.71	0.89	1.08	1.26	1.38	1.38	0.98	1.23	1.49	1.75	1.92	1.92
	30	26.1	0.47	0.61	0.76	0.91	1.06	1.12	0.65	0.86	1.07	1.27	1.48	1.57	0.88	1.18	1.47	1.77	2.07	2.18
	40	35.0	0.47	0.61	0.76	0.91	1.06	1.12	0.65	0.86	1.07	1.27	1.48	1.57	0.88	1.18	1.47	1.77	2.07	2.18
CRO(T)-10 30/110	0	6.5	1.64	1.64	1.64	1.64	1.64	1.64	2.32	2.32	2.32	2.32	2.32	2.32	3.26	3.26	3.26	3.26	3.26	3.26
	10	12.0	1.88	1.88	1.88	1.88	1.88	1.88	2.65	2.65	2.65	2.65	2.65	2.65	3.74	3.74	3.74	3.74	3.74	3.74
	20	18.4	1.77	2.14	2.14	2.14	2.14	2.14	2.50	3.02	3.02	3.02	3.02	3.02	3.53	4.25	4.25	4.25	4.25	4.25
	30	26.1	1.30	2.22	2.42	2.42	2.42	2.42	1.83	3.14	3.42	3.42	3.42	3.42	2.58	4.43	4.81	4.81	4.81	4.81
	40	35.0	1.53	1.57	2.61	2.72	2.72	2.72	0.74	2.22	3.69	3.85	3.85	3.85	1.04	3.12	5.21	5.42	5.42	5.42

Numbers shown in italic indicate vacuum in inches.

CRANKCASE PRESSURE REGULATING VALVES

SPORLAN

REFRIGERANT 404A - CAPACITIES – Tons

Capacities based on 100°F condensing temperature, 10°F superheat, and 0°F subcooling

Type and Adjustment Range	Design Evaporator Temperature °F	Saturated Suction Pressure – psig (Reference)	Pressure Drop Across Valve (psi)																	
			0.5						1						2					
			Valve Settings (psig)																	
			10	20	30	40	50	60	10	20	30	40	50	60	10	20	30	40	50	60
CRO-4 0/20	-40	4.6	0.06	0.07	–	–	–	–	0.09	0.10	–	–	–	–	0.11	0.13	–	–	–	–
	-30	9.9	–	0.08	–	–	–	–	–	0.12	–	–	–	–	–	0.16	–	–	–	–
	-20	16.3	–	0.08	–	–	–	–	–	0.11	–	–	–	–	–	0.15	–	–	–	–
CRO-4 0/50	-40	4.6	0.05	0.07	0.07	0.07	0.07	–	0.07	0.09	0.10	0.10	0.10	–	0.10	0.12	0.13	0.13	0.13	–
	-30	9.9	–	0.07	0.08	0.08	0.08	–	–	0.10	0.12	0.12	0.12	–	–	0.13	0.16	0.16	0.16	–
	-20	16.3	–	0.07	0.09	0.10	0.10	–	–	0.09	0.12	0.14	0.14	–	–	0.13	0.16	0.19	0.19	–
	-10	24.0	–	–	0.08	0.11	0.11	–	–	–	0.12	0.15	0.16	–	–	–	0.14	0.20	0.22	–
	0	33.0	–	–	–	0.10	0.12	–	–	–	–	0.14	0.17	–	–	–	–	0.19	0.24	–
	10	43.5	–	–	–	–	0.11	–	–	–	–	–	0.16	–	–	–	–	–	0.22	–
CRO-4 0/75	-40	4.6	0.05	0.06	0.07	0.07	0.07	0.07	0.07	0.09	0.10	0.10	0.10	0.10	0.09	0.11	0.13	0.13	0.13	0.13
	-30	9.9	–	0.07	0.08	0.08	0.08	0.08	–	0.09	0.11	0.12	0.12	0.12	–	0.12	0.15	0.16	0.16	0.16
	-20	16.3	–	0.07	0.08	0.10	0.10	0.10	–	0.09	0.11	0.14	0.14	0.14	–	0.13	0.15	0.19	0.19	0.19
	-10	24.0	–	–	0.08	0.10	0.11	0.11	–	–	0.11	0.14	0.16	0.16	–	–	0.14	0.19	0.22	0.22
	0	33.0	–	–	–	0.09	0.11	0.13	–	–	–	0.13	0.16	0.18	–	–	–	0.18	0.22	0.25
	10	43.5	–	–	–	–	0.11	0.13	–	–	–	–	0.15	0.18	–	–	–	–	0.21	0.25
	20	55.7	–	–	–	–	–	0.12	–	–	–	–	–	0.16	–	–	–	–	–	0.23

Type and Adjustment Range	Design Evaporator Temperature °F	Saturated Suction Pressure – psig (Reference)	Pressure Drop Across Valve (psi)																	
			0.5						1						2					
			Valve Settings (psig)																	
			10	20	30	40	50	60	10	20	30	40	50	60	10	20	30	40	50	60
CRO(T)-6 0/60	-40	4.6	0.16	0.26	0.36	0.46	0.49	0.49	0.22	0.36	0.50	0.63	0.68	0.68	0.28	0.48	0.67	0.86	0.94	0.94
	-20	16.3	–	0.20	0.33	0.46	0.60	0.67	–	0.28	0.46	0.62	0.85	0.93	–	0.37	0.63	0.89	1.17	1.30
	-10	24.0	–	–	0.27	0.42	0.58	0.72	–	–	0.37	0.59	0.81	1.01	–	–	0.51	0.81	1.13	1.40
	0	33.0	–	–	–	0.33	0.51	0.67	–	–	–	0.45	0.71	0.94	–	–	–	0.62	0.99	1.30
	10	43.5	–	–	–	–	0.38	0.55	–	–	–	–	0.52	0.78	–	–	–	–	0.72	1.08
	20	55.7	–	–	–	–	–	0.36	–	–	–	–	–	0.50	–	–	–	–	–	0.68
CRO(T)-10 0/60	-40	4.6	0.33	0.94	1.07	1.07	1.07	1.07	0.46	1.32	1.51	1.51	1.51	1.51	0.63	1.86	2.12	2.12	2.12	2.12
	-20	16.3	–	0.30	1.13	1.45	1.45	1.45	–	0.43	1.59	2.04	2.04	2.04	–	0.59	2.24	2.88	2.88	2.88
	-10	24.0	–	–	0.58	1.51	1.67	1.67	–	–	0.81	2.14	2.35	2.35	–	–	1.14	3.01	3.32	3.32
	0	33.0	–	–	–	0.76	1.91	1.91	–	–	–	1.07	2.69	2.69	–	–	–	1.51	3.80	3.80
	10	43.5	–	–	–	–	0.88	1.99	–	–	–	–	1.24	2.82	–	–	–	–	1.75	3.97
	20	55.7	–	–	–	–	–	0.57	–	–	–	–	–	0.80	–	–	–	–	–	1.12

Type and Adjustment Range	Design Evaporator Temperature °F	Saturated Suction Pressure – psig (Reference)	Pressure Drop Across Valve (psi)																	
			0.5						1						2					
			Valve Settings (psig)																	
			40	50	60	70	80	90	40	50	60	70	80	90	40	50	60	70	80	90
CROT-6 30/110	0	33.0	0.29	0.41	0.52	0.63	0.76	0.86	0.40	0.57	0.72	0.89	1.07	1.21	0.54	0.79	1.00	1.23	1.49	1.69
	10	43.5	–	0.33	0.45	0.58	0.73	0.84	–	0.46	0.63	0.82	1.02	1.18	–	0.63	0.87	1.13	1.43	1.65
	20	55.7	–	–	0.33	0.48	0.64	0.77	–	–	0.46	0.67	0.90	1.08	–	–	0.63	0.93	1.26	1.51
	30	69.7	–	–	–	–	0.49	0.63	–	–	–	–	0.68	0.88	–	–	–	–	0.95	1.23
	40	85.7	–	–	–	–	–	0.40	–	–	–	–	–	0.57	–	–	–	–	–	0.78
CROT-10 30/110	0	33.0	0.52	1.29	1.91	1.91	1.91	1.91	0.73	1.83	2.69	2.69	2.69	2.69	1.02	2.57	3.80	3.80	3.80	3.80
	10	43.5	–	0.60	1.35	2.17	2.17	2.17	–	0.84	1.91	3.06	3.06	3.06	–	1.18	2.69	4.32	4.32	4.32
	20	55.7	–	–	0.39	1.33	2.36	2.45	–	–	0.54	1.87	3.33	3.46	–	–	0.76	2.64	4.70	4.89
	30	69.7	–	–	–	–	1.17	2.07	–	–	–	–	1.66	2.92	–	–	–	–	2.34	4.13
	40	85.7	–	–	–	–	–	0.42	–	–	–	–	–	0.60	–	–	–	–	–	0.84

CRANKCASE PRESSURE REGULATING VALVES
SPORLAN

REFRIGERANT 507 - CAPACITIES – Tons
Capacities based on 100°F condensing temperature, 10°F superheat, and 0°F subcooling

Type and Adjustment Range	Design Evaporator Temperature °F	Saturated Suction Pressure – psig (Reference)	Pressure Drop Across Valve (psi)																	
			0.5						1						2					
			Valve Setting – psig																	
			10	20	30	40	50	60	10	20	30	40	50	60	10	20	30	40	50	60
CRO-4 0/20	-40	5.5	0.06	0.07	–	–	–	–	0.08	0.10	–	–	–	–	0.11	0.13	–	–	–	–
	-30	11.1	–	0.08	–	–	–	–	–	0.12	–	–	–	–	–	0.16	–	–	–	–
	-20	17.8	–	0.07	–	–	–	–	–	0.10	–	–	–	–	–	0.13	–	–	–	–
CRO-4 0/50	-40	5.5	0.05	0.06	0.07	0.07	0.07	–	0.07	0.09	0.10	0.10	0.10	–	0.09	0.12	0.13	0.13	0.13	–
	-30	11.1	–	0.07	0.08	0.08	0.08	–	–	0.09	0.12	0.12	0.12	–	–	0.13	0.16	0.16	0.16	–
	-20	17.8	–	0.06	0.08	0.10	0.10	–	–	0.09	0.12	0.14	0.14	–	–	0.12	0.16	0.19	0.19	–
	-10	25.8	–	–	0.08	0.10	0.11	–	–	–	0.11	0.14	0.16	–	–	–	0.15	0.20	0.22	–
	0	35.2	–	–	–	0.09	0.12	–	–	–	–	0.13	0.16	–	–	–	–	0.18	0.23	–
	10	46.2	–	–	–	–	0.10	–	–	–	–	–	0.14	–	–	–	–	–	0.20	–
CRO-4 0/75	-40	5.5	0.05	0.06	0.07	0.07	0.07	0.07	0.07	0.08	0.10	0.10	0.10	0.10	0.09	0.11	0.13	0.13	0.13	0.13
	-30	11.1	–	0.06	0.08	0.08	0.08	0.08	–	0.09	0.11	0.12	0.12	0.12	–	0.12	0.15	0.16	0.16	0.16
	-20	17.8	–	0.06	0.08	0.09	0.10	0.10	–	0.09	0.11	0.14	0.14	0.14	–	0.12	0.15	0.18	0.19	0.19
	-10	25.8	–	–	0.08	0.09	0.11	0.11	–	–	0.11	0.13	0.16	0.16	–	–	0.15	0.18	0.22	0.22
	0	35.2	–	–	–	0.09	0.11	0.13	–	–	–	0.13	0.15	0.18	–	–	–	0.17	0.21	0.25
	10	46.2	–	–	–	0.08	0.10	0.12	–	–	–	–	0.14	0.17	–	–	–	–	0.19	0.24
	20	58.8	–	–	–	–	–	0.11	–	–	–	–	–	0.15	–	–	–	–	–	0.21

Type and Adjustment Range	Design Evaporator Temperature °F	Saturated Suction Pressure – psig (Reference)	Pressure Drop Across Valve (psi)																	
			0.5						1						2					
			Valve Settings (psig)																	
			10	20	30	40	50	60	10	20	30	40	50	60	10	20	30	40	50	60
CRO(T)-6 0/60	-40	5.5	0.15	0.25	0.35	0.44	0.49	0.49	0.21	0.35	0.48	0.62	0.68	0.68	0.26	0.46	0.65	0.85	0.93	0.93
	-20	17.8	–	–	0.31	0.44	0.57	0.66	–	–	0.43	0.62	0.80	0.93	–	–	0.59	0.85	1.10	1.29
	-10	25.8	–	–	0.24	0.39	0.54	0.69	–	–	0.33	0.54	0.75	0.97	–	–	0.45	0.75	1.04	1.35
	0	35.2	–	–	–	0.29	0.45	0.63	–	–	–	0.40	0.63	0.88	–	–	–	0.54	0.87	1.23
	10	46.2	–	–	–	–	0.30	0.50	–	–	–	–	0.42	0.71	–	–	–	–	0.58	0.98
CRO(T)-10 0/60	-40	5.5	0.27	0.88	1.06	1.06	1.06	1.06	0.37	1.24	1.50	1.50	1.50	1.50	0.52	1.75	2.11	2.11	2.11	2.11
	-20	17.8	–	–	0.99	1.44	1.44	1.44	–	–	1.40	2.03	2.03	2.03	–	–	1.97	2.86	2.86	2.86
	-10	25.8	–	–	0.39	1.33	1.65	1.65	–	–	0.55	1.88	2.33	2.33	–	–	0.77	2.65	3.29	3.29
	0	35.2	–	–	–	0.52	1.56	1.88	–	–	–	0.73	2.20	2.66	–	–	–	1.03	3.10	3.75
	10	46.2	–	–	–	–	0.44	1.70	–	–	–	–	0.63	2.40	–	–	–	–	0.88	3.30

Type and Adjustment Range	Design Evaporator Temperature °F	Saturated Suction Pressure – psig (Reference)	Pressure Drop Across Valve (psi)																	
			0.5						1						2					
			Valve Setting (psig)																	
			40	50	60	70	80	90	40	50	60	70	80	90	40	50	60	70	80	90
CRO(T)-6 30/110	0	35.2	0.26	0.37	0.49	0.61	0.71	0.83	0.36	0.52	0.69	0.85	1.00	1.17	0.49	0.71	0.95	1.18	1.40	1.63
	10	46.2	–	–	0.42	0.55	0.67	0.80	–	–	0.58	0.77	0.94	1.13	–	–	0.80	1.07	1.31	1.58
	20	58.8	–	–	–	0.43	0.57	0.72	–	–	–	0.60	0.80	1.01	–	–	–	0.84	1.12	1.42
	30	73.3	–	–	–	–	0.40	0.57	–	–	–	–	0.56	0.80	–	–	–	–	0.78	1.12
CRO(T)-10 30/110	0	35.2	0.36	1.06	1.81	1.88	1.88	1.88	0.50	1.49	2.55	2.66	2.66	2.66	0.70	2.10	3.60	3.75	3.75	3.75
	10	46.2	–	–	1.15	1.98	2.14	2.14	–	–	1.63	2.80	3.02	3.02	–	–	2.30	3.95	4.26	4.26
	20	58.8	–	–	–	1.07	1.94	2.41	–	–	–	1.51	2.74	3.41	–	–	–	2.12	3.86	4.81
	30	73.3	–	–	–	–	0.67	1.73	–	–	–	–	0.95	2.44	–	–	–	–	1.33	3.44

EVAPORATOR PRESSURE REGULATING VALVES

SPORLAN

ORIT-6 and ORIT-10

and and Recognized.

Features

- Direct acting (most economical)
- Adjustable
- Hermetic construction (no gaskets or seals)
- Corrosion resistant construction
- Inlet pressure tap (standard)
- Inlet strainer (standard on ODF models)

Specifications

- Maximum Rated Pressure = 400 psig
- Maximum Test Pressure = ORI-6 = 300 psi
  ORI-10 = 200 psi
- Maximum Ambient Temperature = 155°F
- Maximum Fluid Temperature = 240°F
- Minimum Ambient/Fluid Temperature = -40°F
- Factory Setting = See table
- Agency Certifications:

Agency	Product	Guide	File	Country
UL	ORI-6, -10	SFJQ	SA5460	USA
CSA	ORI-6, -10	1223-01	19953	Canada

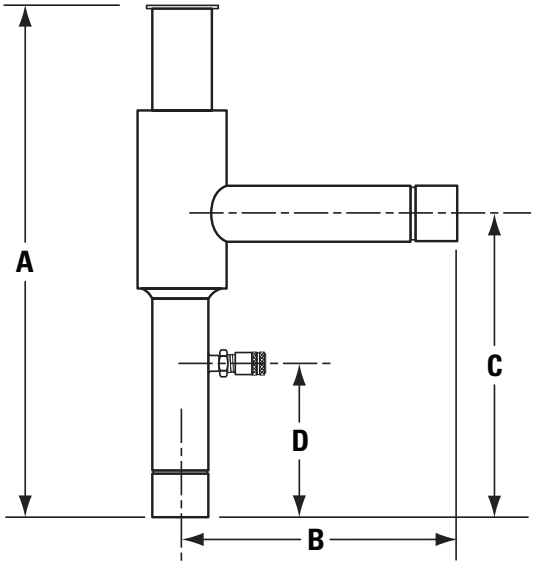

VALVE TYPE	ADJUSTMENT RANGE psig (Standard BOLD)	CONNECTION Inches Standard Connections BOLD	DIMENSIONS – Inches					WEIGHT – Pounds		INLET STRAINER PART NUMBER
			A	B	C	D	SOCKET	NET	SHIPPING	
ORIT-6	**0/50** (Factory set 30)* 30/100 (Factory Set 60)*	5/8 ODF Solder	9.75	5.25	6.38	4.06	0.50	1.00	1.25	825-5
		7/8 ODF Solder	9.75	5.25	6.38	4.06	0.75	1.00	1.25	825-7
		1-1/8 ODF Solder	9.75	5.25	6.38	4.06	0.91	1.25	1.50	825-9
		1/2 SAE Flare	6.41	2.68	2.86	0.94	—	1.00	1.25	Not Available
		5/8 SAE Flare	6.38	2.81	3.00	1.06	—	1.00	1.25	
ORIT-10	**0/50** (Factory set 30)* 30/100 (Factory Set 60)*	7/8 ODF Solder	11.19	5.69	6.50	3.25	0.75	2.50	2.75	825-7
		1-1/8 ODF Solder	11.19	5.69	6.50	3.25	0.91	2.50	2.75	825-9
		1-3/8 ODF Solder	11.19	5.69	6.50	3.25	0.91	2.50	2.75	825-11

** Manufacturers can specify special settings.*

Materials and Construction Details

VALVE TYPE	ELEMENT TYPE AND MATERIAL	CONNECTIONS		BODY MATERIAL	SEATING MATERIAL
		TYPE	MATERIAL		
ORIT-6	Bellows – Brass	ODF Solder	Copper	Brass	Metal-to-Metal
		SAE Flare	Brass		
ORIT-10	Bellows – Brass	ODF Solder	Copper		

Valve Nomenclature:

ORI	T	–	6	–	0/50	–	7/8" ODF
Valve type: **O**pen on **R**ise of **I**nlet Pressure	Pressure tap on inlet connection		Port size in eighths of an inch		Adjustment range psig*		Connections ODF Solder or SAE Flare

** Other pressure ranges are available*
To eliminate delays in shipments, specify complete valve designations.

EVAPORATOR PRESSURE REGULATING VALVES

SPORLAN

(S)ORIT-12, -15, and -20

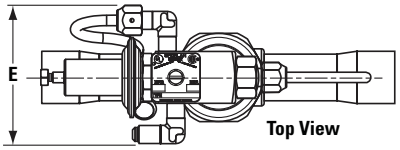

UL and cUL and CE Recognized.

Features

- High side pilot for improved temperature control and low ΔP operation
- Adjustable settings up to 150 psig
- Optional solenoid stop feature to close valve during system defrost
- Normally open design allows system evacuation without a manual operator

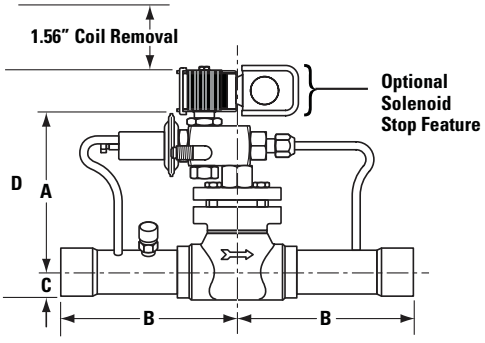

Specifications

- Maximum Rated Pressure = 450 psig
- Maximum Test Pressure = 450 psig
- MOPD = 300 psi (SORIT model only)
- Maximum Ambient Temperature = 120°F
- Maximum Fluid Temperature = 240°F
- Minimum Ambient/Fluid Temperature = -40°F
- Factory Setting = See table
- Agency Certifications:

Agency	Product	Guide	File	Country
UL	SORIT-12, -15, -20	YIOZ	MH4576	USA
ULc	SORIT-12, -15, -20	YIOZ7	MH4576	Canada
UL	ORIT-12, -15, -20	SFJQ	SA5460	USA
ULc	ORIT-12, -15, -20	SFJQ7	SA5460	Canada

VALVE TYPE	PORT SIZE	ADJUSTMENT RANGE psig (Standard BOLD)	STANDARD COIL RATINGS **MKC-1		CONNECTION ODF SOLDER Inches	DIMENSIONS – Inches					WEIGHT – Pounds with solenoid stop		WEIGHT – Pounds without solenoid stop	
			Volts/Cycles	Watts		A	B	C	D	E	NET	SHIPPING	NET	SHIPPING
(S)ORIT-12	25/32	**0/100** (Factory set 30)*	24/50-60 120/50-60 208-240/50-60 120-208-240/50-60	10	7/8, **1-1/8**, 1-3/8	4.99	4.25	0.72	6.50	3.46	4.00	4.75	3.50	4.25
(S)ORIT-15	1	75/150 (Factory set 120)*			**1-3/8**	4.91	5.53	0.88	6.42	3.46	5.75	7.00	5.25	6.50
(S)ORIT-20	1-5/16				**1-5/8**, 2-1/8	5.66	5.53	1.44	7.16	3.50	9.75	11.00	9.25	10.50

** Manufacturers can specify special settings.*
*** Available with junction box or conduit boss at no extra charge. For voltages other than listed consult Bulletin 30-10.*

Valve Nomenclature:

S	ORI	T	–	15	–	0/100	–	1-3/8" ODF	–	120/50-60
Solenoid Stop feature (optional)	Valve type: **O**pen on **R**ise of **I**nlet pressure	Pressure tap on inlet connection		Valve size		Adjustment range psig*		Connections ODF Solder		Electrical specifications for Solenoid Stop Feature (optional)

** Other pressure ranges are available*

Omission of designation for an optional item indicates a request for a valve less that specific option. ***Example: ORIT-15-0/75-1-3/8 ODF; this indicates a valve less the solenoid stop feature.***

When ordering a valve with a solenoid stop feature, specify voltage and cycles.

When ordering the solenoid coil assembly only, specify MKC-1 coil, voltage and cycles. ***Example: MKC-1-120 volts/50-60 cycles.***

EVAPORATOR PRESSURE REGULATING VALVES

SPORLAN

(S)ORIT-PI-2, -3, -4, and -5

and and Recognized.

Features

- Piloted internally (no high side connection required)
- Adjustable settings up to 150 psig
- Optional solenoid stop feature to close valve during system defrost
- Optional electric open feature for "two temperature operation"
- Corrosion resistant construction
- Manual lift stem to allow system evacuation

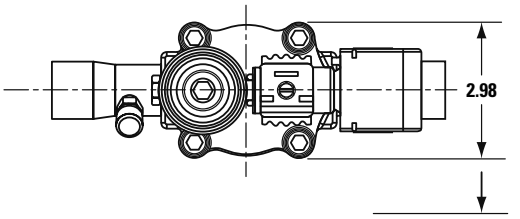

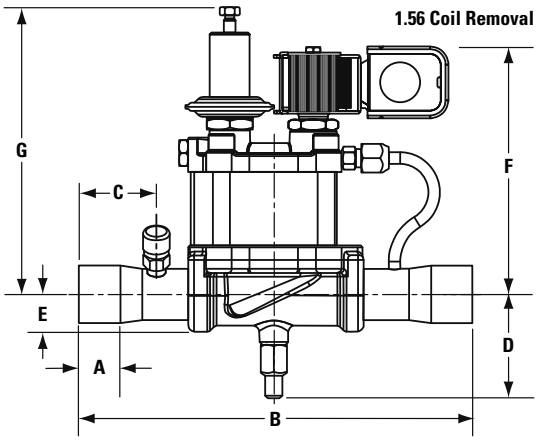

Specifications

- Maximum Rated Pressure = 400 psig
- Maximum Test Pressure = 400 psig
- MOPD = 190 psig (SORIT-PI model only)
- Maximum Ambient Temperature = 120°F
- Maximum Fluid Temperature = 240°F
- Minimum Ambient/Fluid Temperature = -40°F
- Factory Setting = See table
- Agency Certifications:

Agency	Product	Guide	File	Country
UL	SORIT-PI-2, -3, -4, -5	YIOZ	MH4576	USA
ULc	SORIT-PI-2, -3, -4, -5	YIOZ7	MH4576	Canada
UL	ORIT-PI-2, -3, -4, -5	SFJQ	SA5460	USA
ULc	ORIT-PI-2, -3, -4, -5	SFJQ7	SA5460	Canada

VALVE TYPE	PORT SIZE	ADJUSTMENT RANGE psig (Standard BOLD)	STANDARD COIL RATINGS **MKC-1		CONNECTION ODF SOLDER Inches	DIMENSIONS – Inches							WEIGHT – Pounds with solenoid stop		WEIGHT – Pounds without solenoid stop	
			Volts/Cycles	Watts		A	B	C	D	E	F	G	NET	SHIPPING	NET	SHIPPING
(S)ORIT-PI-2	1/2	**0/100** (Factory set 30)* or 75/150 (Factory Set 120)*	24/50-60 120/50-60 208-240/50-60 120-208-240/50-60	10***	5/8	.50	8.63	1.70	2.28	.72	5.25	6.30	5.94	7.12	5.83	7.00
					7/8	.78	8.63	1.70	2.28	.72	5.25	6.30	6.04	7.22	5.47	6.65
					1-1/8	.91	8.63	1.70	2.28	.72	5.25	6.30	6.06	7.24	5.84	7.00
					1-3/8	1.00	10.9	2.54	2.28	.72	5.25	6.30	6.00	7.18	6.05	7.22
(S)ORIT-PI-3	3/4				7/8	.78	8.63	1.70	2.28	.72	5.25	6.30	6.06	7.24	5.87	7.04
					1-1/8	.91	8.63	1.70	2.28	.72	5.25	6.30	6.06	7.24	5.47	6.65
					1-3/8	1.00	10.9	2.54	2.28	.72	5.25	6.30	6.06	7.24	5.99	7.16
					1-5/8	1.09	10.9	2.54	2.28	.72	5.25	6.30	6.20	7.38	5.99	7.16
(S)ORIT-PI-4	1				1-1/8	.91	8.63	1.70	2.28	.72	5.25	6.30	6.06	7.24	5.47	6.65
					1-3/8	1.00	10.9	2.54	2.28	.72	5.25	6.30	5.94	7.12	5.84	7.00
					1-5/8	1.09	10.9	2.54	2.28	.72	5.25	6.30	6.06	7.24	5.89	7.06
					2-1/8	1.25	10.9	2.54	2.28	.72	5.25	6.30	6.10	7.28	6.43	7.60
(S)ORIT-PI-5	1-1/4				1-3/8	1.00	10.9	2.25	2.78	1.28	5.69	6.74	6.30	7.92	7.00	8.60
					1-5/8	1.09	10.9	2.25	2.78	1.28	5.69	6.74	7.00	8.62	7.00	8.60
					2-1/8	1.25	10.9	2.25	2.78	1.28	5.69	6.74	7.28	8.90	7.00	8.60

** Manufacturers can specify special settings.*
*** Available with junction box or conduit boss at no extra charge. For voltages other than listed consult Bulletin 30-10.*
**** 10 watts/coil if specifying SORIT-PI-xxx, SE would be 20 watts with both coils energized.*

Valve Nomenclature:

S	ORI	T	–	PI	–	2	7	S	E	–	0/100	120/50-60
Solenoid Stop feature (optional)	Basic type: **O**pen on **R**ise of **I**nlet pressure	Pressure tap on inlet connection		Piloted internally		Port size in 1/4 of an inch	Fitting size in 1/8 of an inch	Solenoid stop feature (optional)	Electric open feature (optional)		Adjustment range psig *	Electrical specifications for Solenoid Stop Feature (optional)

** Other pressure ranges are available.*

Omission of designation for an optional item indicates a request for a valve less that specific option.
Example: ORIT-PI-411-0/100; this indicates a valve less the solenoid stop feature.
When ordering a valve with a solenoid stop feature, specify voltage and cycles.
When ordering the solenoid coil assembly only, specify MKC-1 coil, voltage and cycles. ***Example: MKC-1-120 volts/50-60 cycles.***

CAPACITY TABLE — Capacity (Tons)

VALVE TYPE	EVAPORATOR DESIGN TEMPERATURE °F	SATURATION PRESSURE - psig				REFRIGERANT																	
						22						134a						404A & 507					
		REFRIGERANT				PRESSURE DROP ACROSS VALVE - psi																	
		22	134a	404A	507	0.5	1	2	5	10	20	0.5	1	2	5	10	20	0.5	1	2	5	10	20
ORIT-6 0/50 or 30/100	40	68.5	35.4	85.7	89.8	–	0.93	1.29	1.94	2.50	2.84	–	0.71	0.97	1.39	1.61	1.62	–	0.84	1.17	1.76	2.30	2.69
	20	43.1	18.4	55.7	58.8	–	0.76	1.04	1.52	1.86	1.92	–	0.55	0.74	0.99	1.04	–	–	0.67	0.92	1.36	1.69	1.80
	0	24.0	06.5	32.9	35.2	–	0.60	0.81	1.13	1.25	1.25	–	0.41	0.54	0.64	–	–	–	0.51	0.70	0.99	1.14	1.14
	-20	10.2		16.3	17.8	–	0.46	0.61	0.70	0.78	0.79	–	–	–	–	–	–	–	0.38	0.52	0.68	0.70	0.70
ORIT-10 0/50 or 30/100	40	68.5	35.4	85.7	89.8	–	2.27	3.20	5.02	6.99	9.61	–	1.76	2.48	3.85	5.31	7.10	–	2.04	2.88	4.52	6.31	8.70
	20	43.1	18.4	55.7	58.8	–	1.86	2.61	4.08	5.65	7.66	–	1.38	1.94	3.00	4.07	–	–	1.63	2.29	3.59	4.98	6.79
	0	24.0	06.5	32.9	35.2	–	1.49	2.09	3.25	4.45	5.88	–	1.06	1.49	2.26	–	–	–	1.22	1.72	2.67	3.66	4.88
	-20	10.2		16.3	17.8	–	1.18	1.65	2.53	3.40	4.30	–	–	–	–	–	–	–	0.97	1.36	2.10	2.84	3.66
(S)ORIT-12 0/75 or 75/150	40	68.5	35.4	85.7	89.8	2.04	2.88	4.06	6.34	8.79	11.9	1.58	2.23	3.13	4.85	6.54	8.62	1.84	2.59	3.66	5.72	7.94	10.8
	20	43.1	18.4	55.7	58.8	1.67	2.36	3.31	5.15	7.06	9.39	1.25	1.75	2.45	3.75	5.00	–	1.47	2.07	2.91	4.53	6.24	8.36
	0	24.0	06.5	32.9	35.2	1.34	1.89	2.65	4.08	5.51	7.06	0.96	1.35	1.87	2.80	–	–	1.15	1.61	2.27	3.50	4.76	6.18
	-20	10.2		16.3	17.8	1.06	1.49	2.08	3.15	4.14	4.94	–	–	–	–	–	–	0.88	1.23	1.72	2.62	3.48	4.28
(S)ORIT-15 0/75 or 75/150	40	68.5	35.4	85.7	89.8	3.38	4.76	6.70	10.4	14.3	19.1	2.62	3.69	5.16	7.91	10.6	13.3	3.04	4.29	6.03	9.40	13.0	17.4
	20	43.1	18.4	55.7	58.8	2.76	3.89	5.46	8.42	11.4	14.8	2.06	2.89	4.03	6.07	7.89	–	2.42	3.42	4.80	7.42	10.1	13.2
	0	24.0	06.5	32.9	35.2	2.22	3.12	4.36	6.63	8.79	10.7	1.58	2.21	3.06	4.47	–	–	1.89	2.66	3.73	5.71	7.63	9.53
	-20	10.2		16.3	17.8	1.75	2.46	3.41	5.07	6.43	6.61	–	–	–	–	–	–	1.45	2.03	2.82	4.24	5.47	6.24
(S)ORIT-20 0/75 or 75/150	40	68.5	35.4	85.7	89.8	7.40	10.4	14.7	22.9	31.5	42.3	5.74	8.09	11.3	17.4	23.4	29.8	6.66	9.40	13.2	20.7	28.5	38.5
	20	43.1	18.4	55.7	58.8	6.06	8.53	12.0	18.5	25.2	32.8	4.52	6.35	8.85	13.4	17.5	–	5.31	7.49	10.5	16.3	22.3	29.4
	0	24.0	06.5	32.9	35.2	4.86	6.84	9.57	14.6	19.5	24.1	3.48	4.86	6.72	9.91	–	–	4.15	5.84	8.19	12.6	16.9	21.3
	-20	10.2		16.3	17.8	3.85	5.39	7.49	11.2	14.4	15.8	–	–	–	–	–	–	3.17	4.45	6.20	9.35	12.2	14.2
(S)ORIT-PI-2 0/100 or 75/150	40	68.5	35.4	85.7	89.8	–	2.19	3.04	4.67	6.92	9.07	–	1.72	2.39	3.83	5.05	6.14	–	1.95	2.70	4.16	6.27	8.31
	20	43.1	18.4	55.7	58.8	–	1.81	2.51	3.87	5.48	6.90	–	1.37	1.90	2.91	3.70	–	–	1.57	2.18	3.36	4.86	6.22
	0	24.0	06.5	32.9	35.2	–	1.48	2.04	3.20	4.16	4.86	–	1.08	1.48	2.12	–	–	–	1.25	1.73	2.76	3.63	4.37
	-20	10.2		16.3	17.8	–	1.18	1.63	2.41	2.95	3.07	–	–	–	–	–	–	–	0.97	1.34	2.03	2.55	2.74
(S)ORIT-PI-3 0/100 or 75/150	40	68.5	35.4	85.7	89.8	–	3.89	5.42	8.42	12.1	16.1	–	3.05	4.25	6.71	8.94	11.1	–	3.47	4.85	7.52	11.0	14.7
	20	43.1	18.4	55.7	58.8	–	3.21	4.47	6.94	9.66	12.4	–	2.42	3.38	5.14	6.61	–	–	2.79	3.90	6.05	8.56	11.1
	0	24.0	06.5	32.9	35.2	–	2.60	3.63	5.62	7.39	8.88	–	1.88	2.59	3.76	–	–	–	2.20	3.07	4.84	6.43	7.92
	-20	10.2		16.3	17.8	–	2.07	2.88	4.25	5.33	5.70	–	–	–	–	–	–	–	1.70	2.37	3.58	4.58	5.09
(S)ORIT-PI-4 0/100 or 75/150	40	68.5	35.4	85.7	89.8	–	5.85	8.22	12.9	18.9	25.2	–	4.57	6.42	10.4	14.0	17.6	–	5.25	7.38	11.6	17.1	23.0
	20	43.1	18.4	55.7	58.8	–	4.81	6.76	10.6	15.1	19.5	–	3.62	5.08	8.00	10.4	–	–	4.21	5.91	9.26	13.3	17.5
	0	24.0	06.5	32.9	35.2	–	3.89	5.46	8.75	11.6	14.2	–	2.81	4.03	5.90	–	–	–	3.30	4.64	7.52	10.1	12.6
	-20	10.2		16.3	17.8	–	3.07	4.32	6.65	8.43	9.25	–	–	–	–	–	–	–	2.54	3.57	5.59	7.21	8.26
(S)ORIT-PI-5 0/100 or 75/150	40	68.5	35.4	85.7	89.8	–	7.32	10.3	16.1	22.4	30.4	–	5.67	7.97	12.3	16.8	22.0	–	6.59	9.28	14.5	20.2	27.6
	20	43.1	18.4	55.7	58.8	–	5.98	8.42	13.1	18.0	24.0	–	4.46	6.24	9.55	12.8	–	–	5.25	7.39	11.5	15.9	21.3
	0	24.0	06.5	32.9	35.2	–	4.80	6.73	10.4	14.1	18.1	–	3.42	4.76	7.15	–	–	–	4.10	5.76	8.90	12.1	15.8
	-20	10.2		16.3	17.8	–	3.77	5.26	7.98	10.5	12.7	–	–	–	–	–	–	–	3.13	4.37	6.68	8.89	11.0

Capacities are calculated in accordance with ASHRAE Standard 158.2, "Methods of testing Capacity of Refrigerant Pressure Regulators". Capacities are based on 90°F Liquid Temperature entering the expansion valve and 25°F superheated vapor entering the compressor.
ORIT-6 and ORIT-10 are rated based on a valve setting 8 psi lower than the Evaporator Design Temperature for the 0/50 psi adjustment range, and 12 psi lower for the 30/100 psi adjustment range.

Refrigerant Liquid Temperature Correction Factors for 90°F Liquid

	0	10	20	30	40	50	60	70	80	90	100
R-22	1.38	1.34	1.30	1.26	1.22	1.17	1.13	1.09	1.04	1.00	0.95
R-134a	1.48	1.43	1.38	1.33	1.27	1.22	1.17	1.11	1.06	1.00	0.94
R-404A & R-507	1.65	1.58	1.51	1.45	1.38	1.31	1.23	1.16	1.08	1.00	0.92

SPORLAN
248-336

QUICK PICK SELECTION TABLES for SUPERMARKET MULTIPLE EVAPORATOR SYSTEMS – Valve Capacity Btuh

COMMON SUCTION °F	CIRCUIT or EVAP. °F	REFRIGERANT 22							REFRIGERANT 404A & 507						
		(S)ORIT-PI				(S)ORIT			(S)ORIT-PI				(S)ORIT		
		2	3	4	5	12	15	20	2	3	4	5	12	15	20
-35	-35*	8,900	15,500	23,000	28,000	11,000	18,500	39,900	8,800	15,300	22,700	27,700	10,900	18,300	39,500
	-33	12,900	22,500	33,600	40,900	16,100	27,000	58,100	12,700	22,300	33,200	40,600	16,000	26,800	57,700
	-30	20,600	36,200	56,300	66,700	26,200	44,000	94,100	20,500	36,000	56,000	66,300	26,100	43,700	93,500
	-25	29,900	52,900	82,700	99,600	39,100	65,400	138,700	29,700	52,600	82,300	99,300	39,000	65,100	138,100
-25	-25*	11,100	19,400	28,700	35,000	13,800	23,200	50,000	11,000	19,200	28,500	35,000	13,800	23,100	49,900
	-23	16,000	28,100	41,900	51,200	20,100	33,800	72,700	15,800	27,800	41,700	51,200	20,100	33,800	72,700
	-21	23,000	40,300	62,600	73,800	29,000	48,700	104,400	23,000	40,300	62,600	73,900	29,000	48,700	104,400
	-18	30,800	54,200	84,500	100,600	39,500	66,200	141,300	30,800	54,300	84,600	100,900	39,600	66,400	141,600
	-15	37,300	66,000	103,200	124,100	48,700	81,400	173,000	37,400	66,200	103,500	124,600	48,900	81,800	173,600
	-10	46,900	83,700	131,400	160,300	62,800	104,800	221,100	47,000	84,000	132,000	161,400	63,200	105,500	222,200
-15	-15*	13,600	23,900	35,400	43,400	17,100	28,700	61,900	13,500	23,700	35,400	43,700	17,200	28,900	62,200
	-13	19,600	34,500	51,500	63,300	24,900	41,800	90,000	19,400	34,400	51,600	63,700	25,100	42,100	90,600
	-10	31,900	56,000	87,000	102,900	40,500	67,800	145,300	32,200	56,400	87,700	103,800	40,800	68,400	146,500
	-5	46,100	81,500	127,300	152,800	60,000	100,300	213,400	46,500	82,300	128,600	154,600	60,700	101,500	215,600
	0	57,900	103,100	161,700	196,900	77,200	128,800	272,000	58,500	104,200	163,700	199,700	78,300	130,600	275,500
	5	68,700	123,200	194,200	239,500	93,700	156,200	327,600	69,500	124,800	197,000	243,600	95,300	158,800	332,500
10	10*	21,600	38,200	57,100	70,800	27,900	46,800	101,000	21,800	38,700	58,300	72,500	28,600	48,000	103,400
	11	22,000	38,800	58,200	72,100	28,400	47,700	102,800	22,200	39,400	59,400	73,900	29,100	48,900	105,400
	12	30,900	54,900	82,900	102,800	40,500	67,900	146,300	31,300	55,800	84,600	105,500	41,500	69,700	150,100
	13	37,900	67,700	102,500	127,000	50,000	83,900	180,300	38,400	68,800	104,800	130,400	51,300	86,100	185,100
	14	44,000	78,800	119,700	147,900	58,200	97,600	209,500	44,600	80,200	122,500	151,900	59,800	100,200	215,200
	15	51,900	91,000	141,300	166,700	65,600	110,000	235,800	53,300	93,500	145,100	171,400	67,400	113,000	242,300
	20	74,900	132,100	206,000	246,300	96,700	161,900	344,800	77,000	135,900	212,100	254,000	99,700	166,900	355,200
	25	93,700	166,400	260,600	315,500	123,700	206,700	437,600	96,600	171,600	269,000	326,300	127,900	213,700	452,000
15	15*	23,600	41,600	62,400	77,500	30,500	51,300	110,600	23,900	42,400	63,900	79,800	31,400	52,700	113,700
	16	24,000	42,400	63,500	78,900	31,100	52,200	112,600	24,300	43,200	65,100	81,300	32,000	53,700	115,900
	17	33,700	59,900	90,500	112,500	44,300	74,400	160,100	34,200	61,100	92,800	115,900	45,600	76,600	164,900
	18	41,300	73,800	112,000	139,000	54,700	91,800	197,400	41,900	75,300	114,900	143,200	56,400	94,600	203,400
	19	47,900	85,800	130,700	161,800	63,600	106,800	229,300	48,700	87,700	134,300	166,900	65,600	110,100	236,400
	20	56,800	99,600	154,600	182,400	71,700	120,300	258,000	58,600	102,700	159,400	188,200	74,000	124,100	266,100
	25	81,900	144,500	225,200	269,100	105,700	176,900	377,100	84,600	149,300	232,900	278,600	109,400	183,100	390,000
	35	121,200	216,400	340,200	416,000	163,000	271,900	572,700	125,700	224,700	353,500	433,500	169,800	283,100	595,500
20	20*	25,600	45,400	68,100	84,700	33,400	56,000	120,800	26,100	46,400	70,000	87,500	34,400	57,900	124,800
	21	26,100	46,100	69,300	86,200	33,900	57,000	123,000	26,500	47,200	71,300	89,100	35,100	58,900	127,100
	22	36,600	65,200	98,700	122,900	48,400	81,200	174,900	37,300	66,800	101,600	127,100	50,000	84,000	180,900
	23	44,800	80,300	122,000	151,700	59,700	100,200	215,500	45,700	82,300	125,700	157,000	61,800	103,700	223,000
	24	52,000	93,400	142,400	176,600	69,500	116,600	250,400	53,100	95,800	146,900	182,900	71,900	120,700	259,200
	25	62,100	108,700	168,800	199,100	78,300	131,300	281,700	64,300	112,600	174,800	206,300	81,100	136,100	291,800
	35	111,900	198,500	310,600	375,300	147,200	246,000	521,400	116,300	206,400	323,300	391,400	153,500	256,500	543,000

Capacities are calculated in accordance with ASHRAE Standard 158.2, "Methods of testing Capacity of Refrigerant Pressure Regulators". Capacities are based on 60°F Liquid Temperature entering the expansion valve and 25°F superheated vapor entering the compressor.

**Capacities are calculated at 1 psi ΔP when common suction and circuit evaporator temperatures are the same. For capacities at conditions other than those shown in the tables, use Sporlan Selection Program or contact Sporlan Headquarters.*

Refrigerant Liquid Temperature Correction Factors for 60°F Liquid											
	0	10	20	30	40	50	60	70	80	90	100
R-22	1.22	1.18	1.15	1.11	1.07	1.04	1.00	0.96	0.92	0.88	0.84
R-404A & R-507	1.33	1.28	1.23	1.17	1.12	1.06	1.00	0.94	0.88	0.81	0.74

QUICK PICK SELECTION TABLES for SUPERMARKET MULTIPLE EVAPORATOR SYSTEMS – Valve Capacity Btuh

COMMON SUCTION °F	CIRCUIT or EVAP. °F	REFRIGERANT 134a							REFRIGERANT 401A						
		(S)ORIT-PI				(S)ORIT			(S)ORIT-PI				(S)ORIT		
		2	3	4	5	12	15	20	2	3	4	5	12	15	20
-35	-35*	4,600	7,900	12,000	14,400	5,700	9,500	20,500	4,800	8,400	12,700	15,300	6,000	10,100	21,800
	-33	6,600	11,600	17,600	21,100	8,300	13,900	30,000	7,100	12,300	18,700	22,400	8,800	14,800	31,900
	-30	10,600	18,700	29,100	34,600	13,600	22,800	48,700	11,300	19,900	30,900	36,700	14,400	24,200	51,700
	-25	15,400	27,400	42,900	52,100	20,400	34,100	72,200	16,400	29,100	45,500	55,200	21,600	36,100	76,500
-25	-25*	5,900	10,300	15,500	18,700	7,400	12,300	26,600	6,200	10,900	16,300	19,700	7,800	13,000	28,100
	-23	8,600	15,100	22,700	27,400	10,800	18,100	38,900	9,100	15,900	23,900	28,900	11,400	19,100	41,000
	-21	12,300	21,500	33,500	39,600	15,600	26,100	55,900	13,000	22,700	35,300	41,700	16,400	27,500	58,900
	-18	16,500	29,100	45,300	54,300	21,300	35,700	75,900	17,400	30,600	47,700	57,100	22,400	37,500	79,900
	-15	20,000	35,400	55,500	67,200	26,400	44,000	93,200	21,000	37,300	58,400	70,600	27,700	46,300	98,100
	-10	25,100	45,100	71,000	87,500	34,300	57,100	119,800	26,500	47,400	74,700	91,800	35,900	59,900	125,900
-15	-15*	7,600	13,200	19,700	23,900	9,400	15,800	34,100	8,000	13,900	20,700	25,100	9,900	16,600	35,700
	-13	11,000	19,300	28,900	35,000	13,800	23,100	49,800	11,600	20,200	30,200	36,700	14,400	24,200	52,100
	-10	17,600	31,000	48,200	57,200	22,500	37,700	80,600	18,500	32,400	50,400	59,800	23,500	39,400	84,300
	-5	25,500	45,300	70,800	85,600	33,600	56,100	118,900	26,700	47,300	74,000	89,300	35,000	58,600	124,200
	0	32,100	57,400	90,400	111,100	43,500	72,500	152,400	33,500	59,900	94,300	115,700	45,300	75,600	158,900
	5	38,200	68,900	109,100	136,300	53,300	88,600	184,700	39,900	71,900	113,700	141,600	55,400	92,100	192,200
10	10*	13,300	23,200	34,400	42,200	16,600	27,900	60,200	13,700	23,900	35,400	43,500	17,100	28,700	62,000
	11	13,500	23,700	35,200	43,200	17,000	28,500	61,500	14,000	24,400	36,200	44,400	17,500	29,300	63,300
	12	19,100	33,600	50,200	61,600	24,200	40,700	87,600	19,600	34,600	51,600	63,300	24,900	41,800	90,100
	13	23,500	41,500	62,300	76,200	30,000	50,300	108,000	24,100	42,700	64,000	78,300	30,800	51,700	111,000
	14	27,700	48,500	75,300	88,800	34,900	58,600	125,600	28,400	49,800	77,400	91,200	35,900	60,200	129,100
	15	31,000	54,500	84,700	100,300	39,400	66,100	141,500	31,900	56,000	87,000	103,000	40,500	67,900	145,300
	20	44,800	79,300	123,900	149,000	58,500	97,800	207,700	46,000	81,400	127,100	152,700	59,900	100,300	213,100
	25	56,200	100,200	157,400	192,100	75,300	125,600	264,800	57,600	102,700	161,300	196,600	77,000	128,600	271,300
15	15*	14,700	25,700	38,200	46,900	18,500	31,000	66,900	15,100	26,400	39,200	48,100	19,000	31,800	68,600
	16	15,000	26,200	39,000	47,900	18,900	31,700	68,300	15,400	26,900	40,000	49,100	19,300	32,500	70,000
	17	21,100	37,200	55,600	68,400	26,900	45,200	97,300	21,600	38,100	57,000	70,100	27,600	46,300	99,700
	18	25,900	45,900	69,000	84,600	33,300	55,800	120,000	26,500	47,000	70,600	86,600	34,100	57,200	122,900
	19	30,700	53,800	83,600	98,600	38,800	65,000	139,500	30,800	54,800	82,600	100,900	39,700	66,600	142,900
	20	34,500	60,500	94,000	111,300	43,700	73,300	157,000	35,300	62,000	96,300	113,900	44,800	75,100	160,800
	25	49,700	88,000	137,400	165,200	64,800	108,400	230,400	50,900	90,000	140,600	168,800	66,200	110,800	235,600
	35	73,800	132,600	209,300	258,800	101,300	168,700	353,300	75,400	135,300	213,400	263,300	103,100	171,700	360,100
20	20*	16,200	28,400	42,200	52,000	20,500	34,400	74,200	16,600	29,000	43,200	53,200	20,900	35,200	75,800
	21	16,500	28,900	43,100	53,100	20,900	35,100	75,700	16,900	29,600	44,000	54,300	21,400	35,900	77,400
	22	23,200	41,000	61,500	75,800	29,800	50,100	107,800	23,700	41,900	62,800	77,400	30,500	51,100	110,100
	23	28,500	50,600	76,200	93,700	36,900	61,800	132,900	29,100	51,700	77,800	95,600	37,600	63,100	135,700
	24	34,100	59,600	92,600	109,200	42,900	72,000	154,500	33,800	60,200	91,000	111,400	43,800	73,500	157,700
	25	38,200	67,000	104,200	123,200	48,400	81,200	173,900	39,000	68,400	106,300	125,700	49,400	82,800	177,500
	35	69,000	122,900	193,000	235,100	92,100	153,800	324,500	70,300	125,200	196,400	238,900	93,600	156,400	330,300

Capacities are calculated in accordance with ASHRAE Standard 158.2, "Methods of testing Capacity of Refrigerant Pressure Regulators." Capacities are based on 60°F Liquid Temperature entering the expansion valve and 25°F superheated vapor entering the compressor.

**Capacities are calculated at 1 psi ΔP, when common suction and circuit evaporator temperatures are the same. For capacities at conditions other than those shown in the tables, use Sporlan Selection Program, or contact Sporlan Headquarters.*

Refrigerant Liquid Temperature Correction Factors for 60°F Liquid

	0	10	20	30	40	50	60	70	80	90	100
R-134a	1.26	1.22	1.18	1.14	1.09	1.05	1.00	0.95	0.90	0.86	0.81
R-401A	1.23	1.19	1.15	1.12	1.08	1.04	1.00	0.96	0.92	0.88	0.84

ELECTRONIC TEMPERATURE CONTROL SYSTEM

SPORLAN

Electric Evaporator Control Valves - CDS-4, -7, -9, -16 and -17

The CDS valves are designed for more precise and energy efficient control of temperatures in evaporators. Proper temperature is obtained by regulating refrigerant flow in the evaporator in response to signals generated by an electronic controller and sensor combination. The valves are built around balanced ports, which allows input power of only 4 watts, less than one quarter of the power used by older heat motor and analog designs. When not actively stepping, power to the motor is removed for further energy savings. The step motors used are standard 12-volt DC bipolar designs, which in concert with the integral gear reduction, give the valves unsurpassed accuracy and repeatability over the entire operating range. Since the valves are powered from an external controller, no pilot lines or high to low side bleeds are required. The properly applied CDS valve and controller can replace standard mechanical evaporator pressure regulators (EPR), suction stop solenoid valves, and conventional thermostats.

All CDS valves may be applied as head pressure control, or liquid line differential valves for R-744. Contact Sporlan for more information. All Sporlan CDS valves are rated at 620 psig (42 barg) MRP.

Simplified cartridge design allows all moving parts to be replaced as a unit. Only the valve body is left in the line. This will allow maintenance or repair without unsweating the entire valve.



CDS-9

***Note: CDS"T" indicates a 1/4" access fitting on the EPR valves.**

Specifications

(Standard Connections and Cable Lengths are in **BOLD** type.)

TYPE	CONNECTIONS ODF SOLDER – Inches	CONFIGURATION	CABLE LENGTH		CABLE ENDS
			Feet	Meters	
CDS-4	1/2, **5/8**, 7/8	Straight Through	**10**	**3**	**S**-Stripped and Tinned
CDS-7	5/8, **7/8**, 1-1/8, 1-3/8				
CDS-9					
CDS-16	**1-3/8**	Angle			
CDS-17	1-3/8, **1-5/8**	Straight Through			

Model	Connections Inches	Style	Max Cap Tons @ 2 ΔP R-22 @20°F	Max Cap kW @ 14 Bar ΔP R-22 @-7°F	Nominal Steps
CDS9	5/8, 7/8, 1-1/8 ODF	Straight Through	5.0 / 7.7	17.5 / 27	3193 / 6386
CDS16	1-3/8 ODF	Angle	12.8	45	6386
CDS17	1-3/8, 1-5/8	Straight	14.3	50	6386

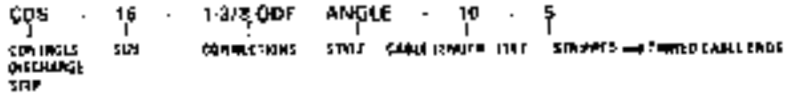

CORRECTION FACTORS - SUCTION & DISCHARGE

REFRIGERANT	Liquid Temperature Entering Expansion Valve °F										
	0°	10°	20°	30°	40°	50°	60°	70°	80°	90°	100°
	Correction Factor, CF Liquid Temperature										
R-22	1.22	1.18	1.15	1.11	1.07	1.04	1.0	0.96	0.92	0.88	0.84
R-134a	1.27	1.22	1.18	1.14	1.09	1.05	1.0	0.95	0.91	0.86	0.81
R-404A	1.34	1.29	1.23	1.17	1.12	1.06	1.0	0.94	0.88	0.81	0.74
R-407A	1.28	1.23	1.19	1.14	1.10	1.05	1.0	0.95	0.90	0.85	0.79
R-407C	1.26	1.22	1.18	1.13	1.09	1.05	1.0	0.95	0.91	0.86	0.81
R-410A	1.26	1.22	1.18	1.13	1.09	1.05	1.0	0.95	0.90	0.85	0.80
R-422D	1.34	1.29	1.23	1.17	1.12	1.06	1.0	0.94	0.88	0.81	0.75
R-507A	1.35	1.29	1.24	1.18	1.12	1.06	1.0	0.94	0.87	0.81	0.74
R-744	1.09	1.05	1.0	0.95	0.90	–	–	–	–	–	–

REFRIGERANT	Liquid Temperature Entering Expansion Valve °C										
	-15°	-10°	-5°	0°	5°	10°	15°	20°	25°	30°	35°
	Correction Factor, CF Liquid Temperature										
R-22	1.19	1.16	1.13	1.10	1.07	1.03	1.0	0.97	0.93	0.90	0.86
R-134a	1.24	1.20	1.16	1.12	1.08	1.04	1.0	0.96	0.92	0.87	0.83
R-404A	1.30	1.25	1.20	1.15	1.10	1.05	1.0	0.95	0.89	0.83	0.77
R-407A	1.25	1.21	1.17	1.13	1.09	1.04	1.0	0.96	0.91	0.87	0.82
R-407C	1.23	1.20	1.16	1.12	1.08	1.04	1.0	0.96	0.92	0.87	0.83
R-410A	1.23	1.20	1.16	1.12	1.08	1.04	1.0	0.96	0.92	0.87	0.83
R-422D	1.30	1.25	1.20	1.15	1.10	1.05	1.0	0.95	0.89	0.84	0.78
R-507A	1.31	1.26	1.21	1.16	1.11	1.05	1.0	0.94	0.89	0.83	0.77
R-744	1.08	1.04	1.0	0.96	0.91	–	–	–	–	–	–

These correction factors correct for net refrigerating effect and are based on an evaporator temperature of 0°F (-15°C), however they may be used for any evaporator temperature because the variation in the factors across the range is insignificant.

ELECTRONIC TEMPERATURE CONTROL SYSTEM

SPORLAN

Electric Evaporator Control Valves - CDS-4, -7, -9, -16 and -17

FLOW CAPACITY - SUCTION (TONS)

Valve Model	Evaporator Temp. (°F)	REFRIGERANT																			
		R-22					R-134a					R-404A					R-407A				
		Pressure Drop Across Valve (psid)																			
		0.5	1	3	5	10	0.5	1	3	5	10	0.5	1	3	5	10	0.5	1	3	5	10
CDS-2	40	0.53	0.73	1.25	1.59	2.28	0.42	0.59	1.00	1.29	1.76	0.48	0.67	1.14	1.46	2.12	0.51	0.71	1.20	1.53	2.19
	20	0.43	0.61	1.03	1.32	1.84	0.34	0.47	0.79	1.01	1.35	0.39	0.55	0.93	1.19	1.68	0.41	0.57	0.97	1.26	1.73
	0	0.35	0.49	0.84	1.07	1.45	0.26	0.37	0.61	0.76	0.98	0.31	0.44	0.74	0.96	1.30	0.32	0.45	0.77	0.98	1.32
	-20	0.28	0.39	0.65	0.82	1.09	0.20	0.28	0.45	0.54	0.66	0.24	0.34	0.58	0.73	0.97	0.25	0.35	0.58	0.73	0.96
	-40	0.22	0.31	0.49	0.61	0.76	0.15	0.20	0.31	0.36	0.38	0.19	0.26	0.43	0.53	0.68	0.19	0.27	0.42	0.52	0.64
CDS-4	40	1.10	1.54	2.64	3.39	4.78	0.88	1.23	2.11	2.70	3.62	1.01	1.42	2.43	3.12	4.45	1.06	1.48	2.54	3.26	4.59
	20	0.91	1.27	2.18	2.79	3.82	0.70	0.98	1.67	2.09	2.71	0.82	1.15	1.97	2.53	3.51	0.85	1.20	2.05	2.65	3.58
	0	0.73	1.03	1.76	2.23	2.95	0.55	0.77	1.26	1.55	1.89	0.65	0.92	1.57	2.00	2.68	0.67	0.95	1.62	2.04	2.68
	-20	0.58	0.82	1.37	1.70	2.15	0.42	0.58	0.91	1.07	1.16	0.51	0.71	1.21	1.51	1.95	0.52	0.73	1.22	1.50	1.87
	-40	0.45	0.63	1.02	1.22	1.41	0.31	0.41	0.61	0.65	0.65	0.39	0.54	0.89	1.08	1.30	0.39	0.55	0.87	1.03	1.14
CDS-7	40	3.12	4.31	7.22	9.17	13.0	2.51	3.47	5.81	7.38	9.53	2.85	3.94	6.60	8.38	12.2	3.00	4.15	6.93	8.81	12.5
	20	2.59	3.58	5.99	7.61	10.2	2.02	2.79	4.57	5.60	6.82	2.33	3.22	5.38	6.84	9.5	2.44	3.37	5.64	7.27	9.5
	0	2.11	2.93	4.89	6.04	7.62	1.59	2.20	3.40	4.01	4.36	1.87	2.58	4.32	5.47	7.03	1.94	2.69	4.50	5.50	6.87
	-20	1.69	2.34	3.72	4.48	5.21	1.22	1.69	2.36	2.58	2.58	1.47	2.03	3.31	4.03	4.86	1.52	2.10	3.29	3.93	4.43
	-40	1.33	1.84	2.69	3.07	3.15	0.92	1.10	1.44	1.44	1.44	1.13	1.56	2.37	2.77	2.95	1.16	1.60	2.27	2.53	2.55
CDS-9	40	4.65	6.46	10.9	13.9	19.7	3.73	5.19	8.74	11.2	14.9	4.26	5.91	9.96	12.7	18.4	4.47	6.21	10.5	13.3	18.9
	20	3.85	5.35	9.01	11.5	15.7	2.99	4.16	6.89	8.6	11.0	3.47	4.82	8.11	10.3	14.5	3.62	5.03	8.48	10.9	14.7
	0	3.14	4.36	7.34	9.17	12.1	2.35	3.27	5.20	6.33	7.60	2.77	3.85	6.49	8.27	11.0	2.89	4.01	6.75	8.39	10.9
	-20	2.51	3.48	5.64	6.96	8.71	1.81	2.51	3.73	4.33	4.58	2.17	3.02	4.99	6.20	7.93	2.25	3.12	5.01	6.15	7.56
	-40	1.96	2.72	4.17	4.98	5.60	1.35	1.69	2.45	2.56	2.56	1.67	2.31	3.64	4.41	5.20	1.71	2.37	3.56	4.19	4.52
CDS-16	40	7.95	11.1	18.8	24.1	33.1	6.37	8.89	15.1	18.8	23.9	7.30	10.2	17.3	22.1	31.1	7.64	10.7	18.1	23.1	31.8
	20	6.57	9.17	15.6	19.9	25.8	5.09	7.11	11.7	14.1	16.7	5.93	8.27	14.0	17.9	24.0	6.19	8.63	14.6	18.6	24.0
	0	5.34	7.45	12.6	15.3	18.9	3.99	5.57	8.60	10.0	10.4	4.73	6.61	11.2	13.9	17.6	4.91	6.86	11.6	14.0	17.0
	-20	4.26	5.94	9.47	11.3	12.5	3.06	4.27	5.87	6.16	6.16	3.70	5.17	8.44	10.2	11.8	3.82	5.32	8.36	9.8	10.6
	-40	3.32	4.63	6.75	7.49	7.54	2.28	2.80	3.45	3.45	3.45	2.83	3.94	5.99	6.85	7.06	2.89	4.03	5.68	6.09	6.09
CDS-17	40	8.31	11.6	19.5	24.9	35.6	6.67	9.28	15.7	20.1	26.7	7.62	10.6	17.9	22.8	33.2	7.99	11.1	18.8	24.0	34.2
	20	6.88	9.57	16.2	20.6	28.3	5.34	7.43	12.5	15.5	19.7	6.20	8.62	14.6	18.6	26.1	6.47	9.01	15.2	19.8	26.5
	0	5.60	7.79	13.2	16.6	21.6	4.19	5.83	9.37	11.3	13.4	4.95	6.89	11.6	14.9	19.7	5.15	7.17	12.1	15.1	19.6
	-20	4.47	6.22	10.2	12.5	15.5	3.22	4.48	6.68	7.69	7.99	3.88	5.40	9.02	11.2	14.1	4.01	5.57	9.05	11.0	13.4
	-40	3.49	4.85	7.50	8.88	9.77	2.40	3.04	4.34	4.47	4.47	2.97	4.13	6.57	7.90	9.13	3.04	4.23	6.40	7.45	7.9

Capacities based upon 60°F liquid and 25°F superheated vapor. Reference page 14 for liquid temperature correction factors.
* R-744 capacities based upon 20°F liquid and 25°F superheat.

ELECTRONIC TEMPERATURE CONTROL SYSTEM

SPORLAN

Electric Evaporator Control Valves - CDS-4, -7, -9, -16 and -17

FLOW CAPACITY - SUCTION (TONS) continued

Valve Model	Evaporator Temp. (°F)	REFRIGERANT																								
		R-407C					R-410A					R-422D					R-507A					R-744*				
		Pressure Drop Across Valve (psid)																								
		0.5	1	3	5	10	0.5	1	3	5	10	0.5	1	3	5	10	0.5	1	3	5	10	0.5	1	3	5	10
CDS-2	40	0.51	0.71	1.21	1.55	2.21	0.65	0.91	1.55	1.98	2.77	0.43	0.60	1.02	1.31	1.87	0.48	0.67	1.14	1.46	2.12	–	–	–	–	–
	20	0.41	0.58	0.98	1.27	1.74	0.54	0.76	1.29	1.64	2.36	0.35	0.48	0.82	1.07	1.46	0.39	0.55	0.93	1.19	1.69	–	–	–	–	–
	0	0.33	0.46	0.77	0.98	1.32	0.44	0.62	1.05	1.34	1.88	0.27	0.38	0.64	0.82	1.10	0.31	0.44	0.74	0.96	1.31	1.03	1.44	2.45	3.13	4.38
	-20	0.25	0.36	0.59	0.73	0.95	0.35	0.49	0.84	1.07	1.45	0.21	0.29	0.48	0.60	0.78	0.25	0.34	0.58	0.73	0.98	0.87	1.22	2.07	2.64	3.69
	-40	0.19	0.27	0.42	0.52	0.62	0.28	0.39	0.64	0.81	1.07	0.16	0.22	0.34	0.42	0.51	0.19	0.26	0.43	0.54	0.69	0.72	1.01	1.71	2.19	3.06
CDS-4	40	1.07	1.50	2.56	3.29	4.61	1.37	1.93	3.30	4.23	5.94	0.91	1.27	2.18	2.79	3.91	1.01	1.42	2.43	3.13	4.47	–	–	–	–	–
	20	0.86	1.21	2.07	2.66	3.58	1.13	1.59	2.73	3.50	4.97	0.72	1.01	1.74	2.24	3.01	0.82	1.15	1.97	2.53	3.53	–	–	–	–	–
	0	0.68	0.96	1.63	2.04	2.66	0.92	1.29	2.22	2.85	3.92	0.57	0.79	1.36	1.70	2.22	0.65	0.92	1.57	2.02	2.71	2.17	3.05	5.22	6.70	9.40
	-20	0.53	0.74	1.22	1.50	1.84	0.74	1.03	1.77	2.24	2.97	0.43	0.61	1.00	1.23	1.52	0.51	0.72	1.22	1.52	1.98	1.83	2.57	4.39	5.64	7.92
	-40	0.40	0.56	0.87	1.02	1.10	0.57	0.80	1.35	1.67	2.12	0.32	0.45	0.70	0.83	0.90	0.39	0.55	0.90	1.10	1.34	1.51	2.12	3.63	4.65	6.53
CDS-7	40	3.03	4.20	7.02	8.91	12.5	3.87	5.35	8.95	11.4	15.7	2.56	3.54	5.92	7.52	10.6	2.85	3.94	6.60	8.4	12.2	–	–	–	–	–
	20	2.47	3.41	5.71	7.29	9.5	3.22	4.46	7.45	9.47	13.6	2.06	2.85	4.76	6.13	7.97	2.33	3.22	5.39	6.8	9.5	–	–	–	–	–
	0	1.97	2.72	4.47	5.49	6.76	2.64	3.65	6.11	7.76	10.5	1.62	2.25	3.72	4.57	5.63	1.87	2.59	4.33	5.51	7.1	6.06	8.39	14.0	17.8	24.6
	-20	1.54	2.13	3.29	3.89	4.27	2.12	2.94	4.91	6.08	7.75	1.25	1.73	2.71	3.21	3.53	1.47	2.04	3.34	4.09	5.0	5.14	7.11	11.9	15.1	20.9
	-40	1.17	1.62	2.24	2.45	2.45	1.67	2.31	3.67	4.43	5.18	0.94	1.30	1.83	2.01	2.01	1.13	1.57	2.41	2.84	3.06	4.28	5.92	9.90	12.6	17.4
CDS-9	40	4.52	6.28	10.6	13.5	19.0	5.78	8.02	13.5	17.2	23.9	3.82	5.30	8.93	11.4	16.1	4.26	5.92	10.0	12.7	18.4	–	–	–	–	–
	20	3.67	5.09	8.58	11.0	14.7	4.80	6.67	11.2	14.3	20.5	3.06	4.26	7.17	9.24	12.4	3.47	4.82	8.12	10.4	14.5	–	–	–	–	–
	0	2.92	4.06	6.73	8.40	10.9	3.92	5.45	9.18	11.7	16.1	2.41	3.35	5.60	6.99	9.04	2.78	3.86	6.51	8.33	11.1	9.08	12.6	21.2	27.1	37.6
	-20	2.27	3.16	5.02	6.13	7.4	3.15	4.37	7.36	9.23	12.2	1.86	2.58	4.13	5.05	6.11	2.18	3.03	5.03	6.27	8.06	7.68	10.7	18.0	22.9	31.8
	-40	1.73	2.40	3.54	4.12	4.35	2.47	3.43	5.55	6.86	8.61	1.39	1.93	2.89	3.37	3.58	1.68	2.33	3.69	4.49	5.36	6.38	8.86	14.9	19.0	26.4
CDS-16	40	7.72	10.8	18.3	23.4	31.7	9.90	13.8	23.4	30.0	41.8	6.54	9.13	15.5	19.8	26.9	7.31	10.2	17.3	22.1	31.3	–	–	–	–	–
	20	6.25	8.73	14.8	18.6	23.8	8.21	11.5	19.4	24.8	34.7	5.24	7.31	12.4	15.6	20.0	5.94	8.29	14.1	18.0	24.2	–	–	–	–	–
	0	4.96	6.93	11.4	13.9	16.6	6.70	9.34	15.8	20.3	26.7	4.11	5.74	9.51	11.6	13.8	4.75	6.63	11.2	14.1	17.9	15.6	21.8	36.9	47.2	65.9
	-20	3.86	5.38	8.33	9.68	10.2	5.36	7.48	12.7	15.5	19.3	3.15	4.40	6.86	7.98	8.44	3.72	5.19	8.53	10.3	12.2	13.2	18.4	31.2	39.9	55.6
	-40	2.92	4.07	5.58	5.85	5.85	4.19	5.85	9.33	11.1	12.4	2.35	3.29	4.56	4.81	4.81	2.84	3.97	6.10	7.03	7.33	10.9	15.2	25.8	33.0	46.1
CDS-17	40	8.07	11.2	19.0	24.2	34.3	10.3	14.4	24.3	31.0	43.1	6.83	9.50	16.0	20.5	29.1	7.62	10.6	17.9	22.9	33.3	–	–	–	–	–
	20	6.55	9.11	15.4	19.8	26.5	8.58	11.9	20.2	25.7	37.0	5.48	7.62	12.9	16.7	22.2	6.21	8.64	14.6	18.6	26.2	–	–	–	–	–
	0	5.21	7.25	12.2	15.1	19.4	7.01	9.75	16.5	21.0	29.1	4.31	5.99	10.1	12.6	16.2	4.97	6.91	11.7	15.0	20.0	16.3	22.6	38.2	48.8	67.9
	-20	4.05	5.64	9.05	11.0	13.1	5.62	7.82	13.2	16.7	21.9	3.31	4.61	7.45	9.05	10.8	3.90	5.42	9.10	11.3	14.4	13.7	19.1	32.3	41.2	57.4
	-40	3.07	4.27	6.35	7.31	7.59	4.40	6.13	10.0	12.3	15.3	2.48	3.44	5.18	5.98	6.24	2.99	4.16	6.66	8.05	9.44	11.4	15.9	26.8	34.2	47.6

Capacities based upon 60°F liquid and 25°F superheated vapor. Reference page 14 for liquid temperature correction factors.
* R-744 capacities based upon 20°F liquid and 25°F superheat.

ELECTRONIC TEMPERATURE CONTROL SYSTEM

SPORLAN

Electric Evaporator Control Valves - CDS-4, -7, -9, -16 and -17

Flow Capacity - Liquid

Tons psi °F

TYPE	Cv	PRESSURE DROP ACROSS VALVE – psi				
		0.5	1	3	5	10
CDS-4	2.88	9.26	13.0	22.3	28.6	40.1
CDS-7	7.28	24.3	33.6	56.2	71.4	98.7
CDS-9	11.2	37.0	51.5	86.6	110	153
CDS-16	17.9	59.9	82.7	138	175	242
CDS-17	20.4	66.8	93.0	157	200	279

kW bar °C

TYPE	Kv	PRESSURE DROP ACROSS VALVE – bar				
		0.03	0.07	0.20	0.40	0.70
CDS-4	2.49	29.8	45.1	75.4	106	139
CDS-7	6.30	78.4	117	191	264	343
CDS-9	9.72	119	179	294	408	532
CDS-16	15.5	193	287	469	648	841
CDS-17	17.6	216	323	533	741	968

Ratings based on 20°F (-5°C) liquid, -20°F (-30°C) evaporator temperature.

LIQUID TEMPERATURE (°F)				
0°	10°	20°	30°	40°
CORRECTION FACTOR, LIQUID CAPACITY RATING				
1.13	1.07	1.00	0.93	0.86

LIQUID TEMPERATURE (°C)					
-20°	-15°	-10°	-5°	0°	5°
CORRECTION FACTOR, LIQUID CAPACITY RATING					
1.18	1.12	1.06	1.00	0.94	0.87

Controller Packages

TCB Temperature Control Board / IB Interface Board



The TCB interface/controller was designed to allow all Sporlan step motors to be modulated in response to an externally generated signal. The IB and TCB will accept a 4-20 milliamp, or 0-10 volt DC inputs and will stroke the valve in proportion to that signal. The TCB and IB will allow use of the CDS valves with an existing DDC system or other generic temperature controller for hot gas bypass, evaporator temperature, or reclaim applications. **While the TCB and IB will also control Sporlan's line of SER and SEI step motor electric expansion valves, an external signal must be generated in response to superheat and not simply temperature. Please contact Sporlan for more information.**

When the TCB is purchased with optional set point potentiometer and sensor, the TCB becomes a stand alone single point temperature control for the CDS valves. The sensor is installed in the air stream or affixed to the pipe containing the liquid to be controlled.

SMA-12 Step Motor Actuator



The SMA-12 is an instrument designed to help diagnose systems with step motor valves by proving operation of the step motor. The unit is powered by two 9 volt alkaline batteries and will power any standard 12-volt DC bipolar step motor. Step rate is selectable at 1, 50, 100 or 200 steps per second and will stroke the motor in both the open and closed directions. Red lamps indicate continuity of the motor windings and battery power, and binding posts are provided for quick connection of the motor leads. In the event of a controller failure, the SMA-12 can be used to manually open or close the valve or manually step it to any position. The SMA-12 is the basic troubleshooting tool for all step motor valve operated systems.

ITEM NUMBER	DESCRIPTION	CONNECTOR
953276	SMA-12	Binding Post

INTERFACE BOARDS	INPUT	VALVES*
TCB-L (952660)	4-20 ma, 0-10 VDC	CDS
TCB with Potentiometer (952664)	Temperature Sensor	CDS
IB-2 (983188)	4-20 ma, 0-10 VDC	CDS-4, -7
IB-6 (952957)		CDS-9, -16, -17
IB6Q (952960)		SER, SEI

ALL IB Replaced with IB-G. Details at bottom of page.

* Interface boards may be used with electric expansion valves SER and SEI only when used with external superheat controllers. Contact Sporlan for more information.

ACCESSORIES	ITEM NUMBERS	APPLICATION
0-500 psig (0-34.5 bar) Pressure Transducer 10' Cable (Yellow Color Code)	952505	Head Pressure and CO_2 Applications only
Surface Sensor - 2K (Black Color Code)	952662	All
Well Sensor	952795	All except IB and TCB less Potentiometer
Air Sensor	952669	All except IB and TCB less Potentiometer
Omnistat Sensor	952899	OmniStat only

ELECTRONIC TEMPERATURE CONTROL SYSTEM

SPORLAN

(S)ORIT to CDS
CONVERSION KITS

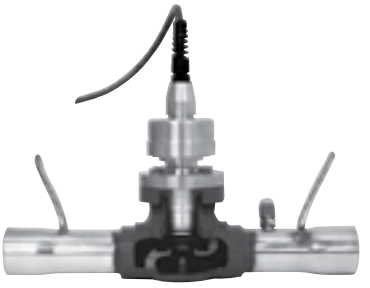

The (S)ORIT-12, -15 and -20 Evaporator Pressure Regulating Valves were developed by Sporlan as the first of a new generation of evaporator pressure regulators. The (S)ORIT series of valves are mechanical regulators which use highside system pressure as a source of operating power. They were developed specifically for systems where accurate control and minimum pressure drop are important requirements.

The CDS valves are electronically operated step motor evaporator pressure regulating valves. Synchronized signals to the motor provide discrete angular movement, which translates into precise linear positioning of the valve piston. Valve pistons and ports are uniquely characterized, providing superb flow resolution and performance. The CDS valves are easily interfaced with microprocessor based controllers, including Sporlan supplied controllers.

Since supermarket equipment is evolving towards electronic control, Sporlan has created a product to allow update of the older mechanical (S)ORIT Evaporator Pressure Regulator (EPR) valves to CDS style Electric Evaporator Pressure Regulator (EEPR) valves.

FEATURES AND BENEFITS

- No need to remove the existing SORIT or ORIT-12, -15 or -20 valve body from the piping
- Economical equipment update, fast installation
- Step motor for precise control
- Tight seating for defrost and pumpdown application
- No pilot gas flow required
- Increased efficiency
- No pressure drop required for operation
- Field proven reliability
- Sporlan quality

ORDERING INSTRUCTIONS

The CDS-16 is the only angled valve. The CDS-4, CDS-7, CDS-9 and CDS-17 are straight through valves.

CDS	–	T	–	17	–	1-3/8 X 1-3/8 ODF	–	20	–	S	–	ANGLE
Controls Discharge, Stepmotor		Optional Inlet Pressure Tap		Model Number		Fitting Size		Cable Length 20' standard, others available		S = Stripped and tinned cable ends. Custom Connectors available		Used only if angled configuration (CDS-16 ONLY)

Table 1

(S)ORIT Model	Kit Model	Kit Part Number	Parts Included
(S)ORIT-12	Kit SORIT-12 to CDS	901656	Motor, adaptor, lock nut and 2645-000 seal gasket, SD-297 instructions
(S)ORIT-15	Kit SORIT-15 to CDS	901654	Motor, adaptor with hex cap screws and 0621-129 o-ring, SD-297 instructions
(S)ORIT-20	Kit SORIT-20 to CDS	901655	Motor, adaptor with hex cap screws and 2539-000 gasket, SD-297 instructions

ELECTRONIC TEMPERATURE CONTROL SYSTEM

SPORLAN A-8/SPORT/A-9 VALVES TO CDS



FEATURES AND BENEFITS

- Converts a mechanical A8, SPORT or A9 valve to a stepper motor driven modulating valve
- Eliminates the need for brazing, because the existing A8, SPORT or A9 valve body stays in the system piping
- Economical system upgrade opportunity, with a typical 30 minute valve installation
- Reduces the external seal surface area
- Improves performance and system efficiency
- No manual setting or adjustment required
- Tight seating for defrost and pumpdown applications
- No pressure drop required for operation
- Field proven reliability and Sporlan quality

For nearly a decade, Sporlan has offered an innovative and economical method to convert currently installed SORIT Evaporator Pressure Regulators into stepper motor driven CDS valves. After tens of thousands of successful conversions and in response to growing demand for more productivity and efficiency tools, Sporlan is pleased to offer the next generation of CDS Conversion Kits. Now it is possible to convert nearly all A8, SPORT and A9 Pressure Regulators into Sporlan stepper motor valves using only one of four kits, and the retrofit has never been easier.

By utilizing the existing A8, SPORT or A9 valve body, there is no brazing required to complete the conversion, saving considerable time and expense. The conversion kit reduces the seal surface area of the installed valve, making this an ideal upgrade opportunity versus a seal rebuild, or even as a full store scheduled retrofit. Once the retrofit is complete, you will find that the solution pays for itself through improvements in system performance, and through future serviceability and diagnostic capabilities.

Review Installation Instruction SD-399 for A8/SPORT and SD-420 for A9 valves for step by step instructions to complete a typical conversion. And for easy implementation and optimal performance, make sure to pair your Conversion Kit with a Sporlan Pressure or Temperature Control.

⚠WARNING – USER RESPONSIBILITY

Failure or improper selection or improper use of the products described herein or related items can cause death, personal injury and property damage.

This document and other information from Parker Hannifin Corporation, its subsidiaries and authorized distributors provide product or system options for further investigation by users having technical expertise.

The user, through its own analysis and testing, is solely responsible for making the final selection of the system and components and assuring that all performance, endurance, maintenance, safety and warning requirements of the application are met. The user must analyze all aspects of the application, follow applicable industry standards, and follow the information concerning the product in the current product catalog and in any other materials provided from Parker or its subsidiaries or authorized distributors.

To the extent that Parker or its subsidiaries or authorized distributors provide component or system options based upon data or specifications provided by the user, the user is responsible for determining that such data and specifications are suitable and sufficient for all applications and reasonably foreseeable uses of the components or systems.

FOR USE ON REFRIGERATION and/or AIR CONDITIONING SYSTEMS ONLY

ELECTRONIC TEMPERATURE CONTROL SYSTEM

SPORLAN A-8/SPORT/A-9 VALVES TO CDS

SPECIFICATIONS

Motor Type	2 phase, bipolar internal (wet) motor
Compatible Refrigerant	All common HCFC and HFC refrigerants
Compatible Oils	All common Mineral, Polyolester and Alkybenzene oils
Supply Voltage	12 VDC +10% -5% (measured at the valve leads)
Cable Type	20' (6m) hermetic cable w/ stripped ends
Phase Resistance	75Ω ± 10% at 70°F (21°C)
Phase Inductance	43MHz ± 20%
Nominal Current	160 mA / winding
Holding Current	Not recommended
Number of Steps	6,386
Recommended Step Rate	200 steps / second (PPS)
Initialization Steps	7,500 steps closing
Overdriving	Recommended one 10% overdrive closed per day maximum (overdriving open not permitted)
MRP	700 psig (48 bar)
Max Internal Leakage	400 cc/min at 100 psid (6.9 bar), dry air
Ambient Temp Range	-50°F to 140°F (-45°C to 60°C)
Refrigerant Temp Range	-50°F to 240°F (-45°C to 116°C)
Relative Humidity	0-100% (Condensing)

CONVERSION KIT CROSS REFERENCE

Valve Type	Port Size	Conversion Kit	Item Number
A81	5/8″	A81 to SDR-5	183903
A8A	3/8″		
	5/8″		
(S)PORT or (S)PORT-II	3/8″		
	5/8″		
A81	7/8″	A81 to CDS-17	183904
	1-1/8″		
	1-3/8″		
A8A	7/8″		
(S)PORT or (S)PORT-II	7/8″		
	1-1/8″		
	1-3/8″		
A82*	1-5/8″	A82 to CDS-17	183905
	2-1/8″		
(S)PORT*	1-5/8″		
	2-1/8″		
A9	3/8″	A9 to CDS	805580
	5/8″		
	7/8″		
	1-1/8″		

*2-5/8″ port not supported.

ELECTRONIC TEMPERATURE CONTROL SYSTEM

SPORLAN

Electric Expansion Valves - SEI, SER and SERI

Sporlan Electric Expansion Valves (EEVs) are currently available in nominal R-744 capacities from 1 to 100 tons (3.5 to 350 kW). Specific system conditions will dictate which product is necessary to control the application. Details can be reviewed with the Sporlan Sales Engineer.

The SER and SEI are Electronically Operated Step Motor flow control valves, intended for the precise control of liquid refrigerant flow. Synchronized signals to the motor provide discrete angular movement, which translates into precise linear positioning of the valve piston. Valve pistons and ports are uniquely characterized, providing improved flow resolution and performance. The SER and SEI valves are easily interfaced with microprocessor based controllers, including Sporlan supplied controllers.

All Sporlan EEVs are rated for at least 620 psig (42 barg) MRP.

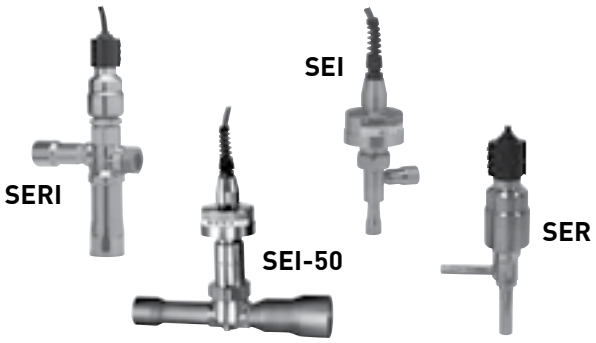

Specifications

VALVE TYPE	INLET – Inches	OUTLET – Inches	CONFIGURATION	CABLE LENGTH	
				Feet	Meters
SEI 0.5, 1, 2, 3.5, 6, 8.5, 11	1/4, 3/8, 1/2 ODF 1/4, 3/8, 1/2 SAE	3/8, 1/2, 5/8 ODF 1/2 SAE	Angle	10, 20, 30, 40	3, 6, 9, 12
SEI 30	5/8, 7/8, 1-1/8 ODF	5/8, 7/8, 1-1/8, 1-3/8 ODF	Angle		
SEI 50*	7/8, 1-1/8, 1-3/8 ODF	7/8, 1-1/8, 1-3/8, 1-5/8 ODF	Straight through		
SER 1-1/2	3/8, 1/2, 5/8 ODF	3/8, 1/2, 5/8 ODF	Angle		
SER 6	3/8, 1/2, 5/8 ODF	3/8, 1/2, 5/8, 7/8 ODF	Angle		
SER 11	3/8, 1/2, 5/8 ODF	1/2, 5/8, 7/8, 1-1/8 ODF	Angle		
SER 20	1/2, 5/8, 7/8, 1-1/8 ODF	5/8, 7/8, 1-1/8, 1-3/8 ODF	Angle		
SERI G	5/8, 7/8 ODF	1/2, 5/8, 7/8, 1-1/8 ODF	Angle / Straight through		
SERI J	7/8, 1-1/8 ODF	7/8, 1-1/8, 1-3/8 ODF	Angle / Straight through		
SERI K	1-1/8 ODF	7/8, 1-1/8, 1-3/8, 1-5/8 ODF	Angle / Straight through		

*Not suitable for bi-directional applications.

ELECTRONIC TEMPERATURE CONTROL SYSTEM

SPORLAN

Electric Expansion Valves

SPORLAN ELECTRIC EXPANSION VALVES					
VALVE TYPE	INLET – Inches (ODF)	OUTLET – Inches (ODF)	CONFIGURATION	CABLE LENGTH	
				FEET	METERS
SER-B*	1/4, 3/8	3/8, 1/2, 5/8	Angle	10, 20, Less Cable	3, 6, Less Cable
SER-C*	1/4, 3/8	3/8, 1/2, 5/8	Angle		
SER-D*	3/8, 1/2, 5/8	1/2, 5/8, 7/8, 1-1/8	Straight Through Offset		
SERI-G*	5/8, 7/8	1/2, 5/8, 7/8, 1-1/8, 1-3/8	Angle or Straight Through Offset	10, 20, 30, 40, Less Cable	3, 6, 9, 12, Less Cable
SERI-J*	7/8, 1-1/8	7/8, 1-1/8, 1-3/8			
SERI-K†	1-1/8	7/8, 1-1/8, 1-3/8, 1-5/8			
SERI-L†	1-1/8, 1-3/8	1-1/8, 1-3/8, 1-5/8			
SEHI-175	1-1/8, 1-3/8, 1-5/8	2-1/8		10, 20, 30, 40	3, 6, 9, 12
SEHI-400	1-5/8, 2-1/8, 2-5/8	1-5/8, 2-1/8, 2-5/8, 3-1/8 ODM	Angle		

*Suitable for bi-directional applications.
†Bi-sealing, reduced flow in reverse direction.

SPECIFICATIONS					
VALVE	SER-B,-C	SER-D	SERI-G, -J, -K, -L	SEHI-175	SEHI-400
Motor type	2 phase, bipolar wet motor				
Compatible refrigerant	All common HCFC and HFC refrigerants including R-410A and subcritical R-744				All common HCFC and HFC refrigerants
Compatible oils	All common Mineral, Polyolester and Alkybenzene oils				
Supply voltage (L/R)	12 volt DC, -5%, +10% measured at the valve leads				
Cable type	IP67 Removable Quad-Position		IP66 Removable	Hermetic	Hermetic
Phase resistance	100 ohms +- 10%		100 ohms +-10%	75 ohms +-10%	75 ohms +-10%
Current range (L/R)	120 ma/ winding		120 ma/ winding	160 ma/ winding	160 ma/ winding
Maximum power input (L/R)	2.8 watts		2.8 watts	3.8 watts	3.8 watts
Recommended step rate	200/second (L/R), up to 400/second (current limited)				
Number of steps	2500		2500	6386	6386
Resolution	.00009" (.0023 mm) / step		.00012" (.003 mm) / step	.00008" (.002 mm) / step	.00008" (.002 mm) / step
Stroke	0.23" (5.8 mm)		.297" (7.5 mm)	.500" (12.7mm)	.500" (12.7mm)
MOPD	580 psid (40 bar)		500 psid (34 bar)	500 psid (34 bar)	300 psid (21 bar)
MRP	1015 psig (70 bar)	700 psig (48 bar)	700 psig (48 bar)	620 psig (43 bar)	500 psig (34 bar)
Max. internal leakage	100 cc/min @ 100 psid (6.9 bar), dry air				
Max. external leakage	.10 oz./yr at 300 psig (2.8 gram/yr @ 20 bar)				
Operating temp range	-50°F to 155°F (-45°C to 68°C)				
Materials of construction	Brass, copper, synthetic seals, stainless steel				

ELECTRONIC TEMPERATURE CONTROL SYSTEM

SPORLAN

Kelvin II Series
Valve Controllers



Part #	Description	LIST
952569	Superheat - s Controller	$1,357.00
952567	Superheat - sd Controller	$2,057.00
952570	Subcool Controller	$2,226.00
953462	Temperature Controller	$2,226.00
953474	Pressure Controller	$2,226.00

Accessories

Item Description	Item Number	Notes
Parker Sporlan Temperature Probes		
3K Sensor - Brass	952551	Not used with well
3K Well Sensor Ki t	805102	Sensor with well
98.6K Sensor	952565	High temperature sensor
Parker Sporlan Pressure Transducers*		
PSPT0500SVSP-S	952576	0-500 psis transducer (R744)
PSPT0300SVSP-S	952574	0-300 psis transducer (R410A)
PSPT0150SVSP-S	952572	0-150 psis transducer (all other refrigerants)
Transducer Cables		
PSPT000000CP50	953100	5 meter cable
PSPT000000CP20	953192	2 meter cable
Troubleshooting Accessories		
SMA-12	953276	Handheld digital instrument for testing EEV performance.

*Select one per controller based on refrigerant.

Visit www.sporlanonline.com/literature for more detailed information.

Superheat Control
- True pressure / temperature stand-alone superheat controller via EEV control
- Remote access via Modbus
- Pumpdown mode via dry contact input
- Manual valve positioning
- Energy efficient system operation though more accurate valve control

Subcool Control
- Controls liquid temperature using an EEV
- Provides secondary control of superheat for system protection
- Displays actual leaving liquid temperature, superheat, suction pressure, valve position, controller status, and alarms
- Pumpdown mode via dry contact input
- Manual valve positioning
- Remote access via Modbus

Temperature Control
- Temperature control via electric valve (ie: SDR)
- Increased operating limits (-50°F to +299°F)
- Remote access via Modbus
- Pumpdown mode via dry contact input
- Manual valve positioning
- Advanced algorithm with AUTO PID to optimize system performance
- Optional high temperature selection for discharge control (60°F to +299°F) with 98.6K temperature sensor
- Optional temperature delta control (maintains T1-T2)

Pressure Control
- Controls electric evaporator regulator valve (CDS) or hot gas bypass valve (SDR) to regulate system pressure
- Remote access via Modbus
- Pumpdown mode via dry contact input
- Manual valve positioning
- Advanced algorithm with AUTO PID to optimize system performance
- Head pressure control to replace mechanical A8 and A9 valves
- Supports inlet or outlet regulator (ie: A80E)

All models are UL approved.

OIL LEVEL CONTROL SYSTEM

SPORLAN

Sporlan's Oil Level Control System Components were developed to offer the refrigeration industry an oil level control system of the highest quality. The heart of the system is the Oil Level Control which when matched with the Oil Reservoir and Oil Differential Check Valve maintains a minimum oil level in the compressor crankcase during all phases of system operation.

Oil Reservoir Type OR-1-1/2



The Sporlan Oil Reservoir (OR-1-1/2) is a holding vessel to contain the oil that is not within the crankcase, the oil separator, or in circulation. The OR-1-1/2 has an inlet and an outlet service valve so it may be isolated from the rest of the system, or the oil supply from the oil reservoir to the Oil Level Control can be eliminated for service.

Oil Level Controls

The purpose of the Sporlan Oil Level Control is to regulate the flow of oil to the compressor crankcase to maintain a minimum oil level as specified by the compressor manufacturer for any given application.

Selection & Specifications

MODEL NUMBER	ADJUSTMENT RANGE	FLANGE DESIGN FOR COMPRESSOR ATTACHMENT	NUMBER OF ARMS LENGTH	EQUALIZATION FITTING OPTION/PLACEMENT	LIST
OL-60CH	5-90 psi Differential	3 bolt, 1-7/8" B.C. (47.6 mm B.C.)	Two arms - standard length	None	-
OL-60FH		3 bolt, 1-7/8" B.C. (47.6 mm B.C.)	Two arms - standard length	Yes - bottom of drill hole at centerline of sightglass	$1,231.00
OL-60HH-6		3 bolt, 1-7/8" B.C. (47.6 mm B.C.)	One arm - standard length	None	$1,221.00
OL-60NH-2		3 bolt, 1-7/8" B.C. (47.6 mm B.C.)	Two arms - standard length	Yes - fitting is .375 inch above standard location	$1,372.00
OL-60XH		3 bolt, 1-7/8" B.C. (47.6 mm B.C.)	Two arms - short length	Yes - bottom of drill hole at centerline of sightglass	$1,231.00
OL-60ZH		4 bolt, 50 mm B.C.	Two arms - short length	Yes - bottom of drill hole at centerline of sightglass	

NOTES: Model OL-60XH-1 is identical to OL-60XH but less equalization fitting.

All Sporlan oil level controls now incorporate the OL-60 design for product simplification. The OL-60 Series are designed to handle a large operating range and replaces the OL-1 and 2 Series oil level controls.

Model Number	Product Type	Compressor Manufacturer and Model	LIST
ADAPTORS			
AOL-A	Adaptor Kit - contains the adaptor fitting, O rings, bolts and nuts	Copeland - Threaded Sight Glass (1-1/8 - 12 thd) under 5 ton Tecumseh - Model P, R, S, PA, RA, SA, CK, CM, CH, CG	$404.00
AOL-C		Carrier - Threaded Sight Glass (1-1/2 - 18 thd) Model DA, DR, 5F, 5H, 6D, 6E, 06CC	$462.00 -
AOL-P		Prestcold - Threaded Sight Glass (42 MM thd) Model E & C	$443.00
AOL-R		Copeland - Model 8R, 8D, 3D Front	$443.00
S-OL	Sight Glass	Incl. with adaptor kits above (except AOL-R) or may be purchased separately	$135.30

Note: "H" designation indicates 400 psi maximum system lest pressure, i.e. OL-1CH, etc. * Replaces OL-1FH-2

OIL LEVEL CONTROL SYSTEM

SPORLAN

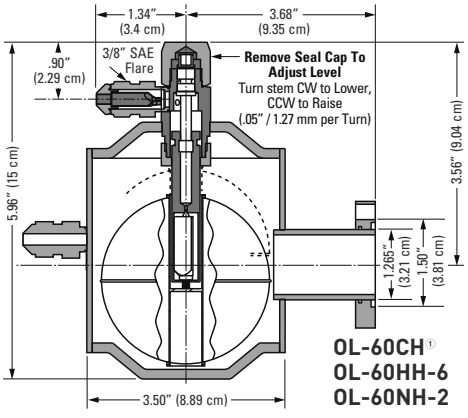

OL-60CH[1]
OL-60HH-6
OL-60NH-2

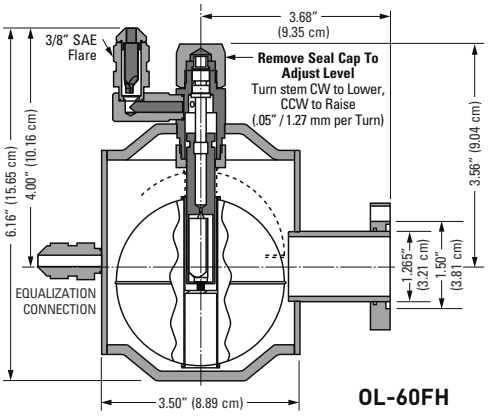

OL-60FH

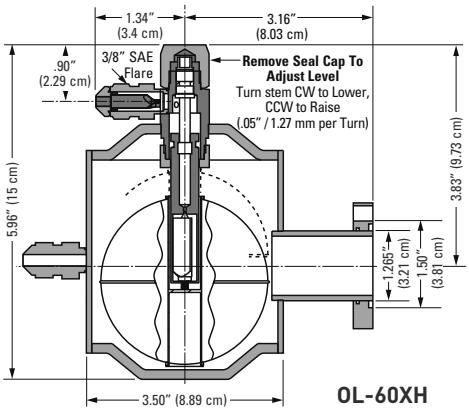

OL-60XH

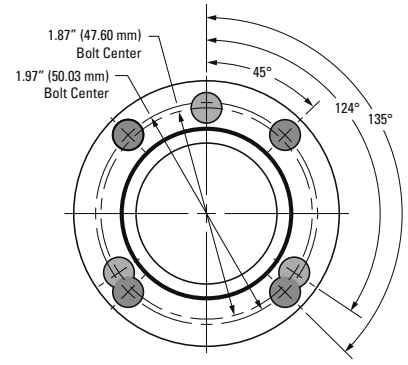

7 Bolt Universal Mounting Flange and Oil Sightglass (S-OL)

Bolt holes are 0.272″ (6.9 mm) diameter. The above hole configuration fits typical 3 and 4 bolt compressor sightglass and oil level control connections.

- 3 Bolt Configuration
- 4 Bolt Configuration

[1] OL-60CH and OL-60HH-6 are supplied less the equalization fitting.

MODEL NUMBER	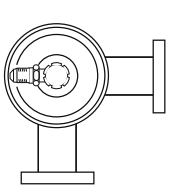 OL-60CH	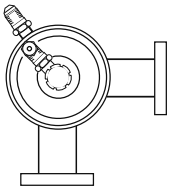 OL-60FH	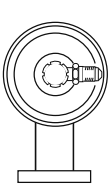 OL-60HH-6	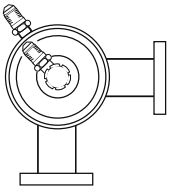 OL-60NH-2	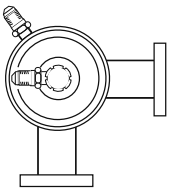 OL-60XH
ADJUSTMENT RANGE	5 - 90 psi (0.34 - 6.2 bar) Differential	5 - 90 psi (0.34 - 6.2 bar) Differential	5 - 90 psi (0.34 - 6.2 bar) Differential	5 - 90 psi (0.34 - 6.2 bar) Differential	5 - 90 psi (0.34 - 6.2 bar) Differential
FLANGE DESIGN FOR COMPRESSOR ATTACHMENT	3 bolt, 1-7/8" B.C. (47.6 mm B.C.)	3 bolt, 1-7/8" B.C. (47.6 mm B.C.)	3 bolt, 1-7/8" B.C. (47.6 mm B.C.)	3 bolt, 1-7/8" B.C. (47.6 mm B.C.)	3 bolt, 1-7/8" B.C. (47.6 mm B.C.)
NUMBER OF ARMS AND LENGTH	Two arms - standard length	Two arms - standard length	One arm - standard length	Two arms - standard length	Two arms - short length
EQUALIZATION FITTING PLACEMENT OPTION	None	Yes - bottom of drill hole at centerline of sightglass	None	Yes - fitting is 0.375" (0.953 mm) above standard location	Yes - bottom of drill hole at centerline of sightglass

NOTES: Model OL-60XH-1 is identical to OL-60XH but less equalization fitting.

All Sporlan oil level controls now incorporate the OL-60 design for product simplification. The OL-60 Series are designed to handle a large operating range and replaces the OL-1 and 2 Series oil level controls.

OIL FILTERS
SPORLAN

OF Series Filters



Features:

- Virtually eliminates the need for oil changes due to suspended particulate in circulation
- 99% removal of 3 micron sized particles
  98% removal of 2 micron sized particles
- Element utilizes a pleated design for maximum surface area
- High flow capacities with low pressure drop
- Filter element utilizes an O-ring seal
- Inert microglass filter material insures lubricant compatibility

OF-303-BP Oil Filter

The design of the OF-303 is similar to the OF-303-BP, but the OF-303 is supplied without the bypass feature. Either filter can be installed in a horizontal or vertical position.

ROF-413 Replaceable Oil Filter

The ROF-413 utilizes a replaceable OFE-1 Oil Filter Element. The ROF-413 must be installed vertically, with the end plate in the "up" position. A refrigeration clamp or a Sporlan A-175-1 Mounting Bracket should be used for easy installation.

OFE-1 Filter Element

The OFE-1 is a replaceable filter element for the ROF-413 Oil Filter



Specifications:

Unit	Description	Connections	Filtering Area (Sq. inches)	Overall Length (inches)	Shell Diam-eter (inches)	UL Rated Working Pressure (psi)	LIST
OF-303	Oil Filter	3/8" SAE Flare	325	9.69	3.00	500	$587.00
OF-303-BP	Oil Filter with Bypass Feature			10.63			$636.00
ROF-413	Replaceable Oil Filter	3/8" SAE Flare		8.77	3.50	400	$675.00

Note: The OF Series Oil Filters are not suitable for use on ammonia systems

DISTRIBUTORS

SPORLAN – For use with all refrigerants

All Sporlan distributors are ready for service with R-410A. The following tables are provided for making selections based on procedure explained in Bulletin 20-10.







Quick Reference

CONNECTION SIZE Inches	TYPICAL TEV TYPES ①, ②	DISTRIBUTOR TYPE	MAXIMUM NUMBER OF CIRCUITS 3/16	1/4	5/16	3/8	NOZZLE TYPE	SIDE CONNECTION
1/2 ODM	*BI, BBI, CBI, CBBI,* EBQ, R, RC, SBQ	1613	6	4	–	–	PERM.	–
		1616	8	6	4	–	PERM.	–
		D260	6	4	–	–	L	–
		D262	9	6	4	–	L	–
5/8 ODM	*BI, BBI, CBI, CBBI,* EBQ, R, RC	1620	6	4	–	–	J	–
		1622	9	7	4	–	J	–
		1651(R)	7	5	–	–	J (R)	3/8 or 1/2 ODF
7/8 ODM	*BI, BBI, CBI, CBBI,* EBQ, O, R	1112	7	6	4	2	G	–
		1113	12	8	6	4	G	–
		1653(R)	12	9	6	4	G (R)	3/8 or 1/2 ODF
1-1/8 ODM	O, R	1115	15	10	9	6	E	–
		1116	20	15	–	–	E	–
		1655 (R)	20	12	10	7	E (R)	1/2 or 5/8 ODF
1-3/8 ODM	O, R	1117	18	15	9	7	C	–
		1126	24	18	15	12	C	–
		1128	28	25	21	16	C	–
		1657(R)	26	18	14	11	C (R)	5/8 or 7/8 ODF
1-5/8 ODM	O	1125	28	24	20	16	A	–
		1127	37	30	26	20	A	–
		1143	40	36	30	24	A	–
		1659(R)	32	24	18	14	A (R)	7/8 or 1-1/8 ODF

① TEV models in italics are OEM type thermostatic expansion valves.
② Thermostatic expansion valves used with refrigerant distributor must be externally equalized.

Dimensions

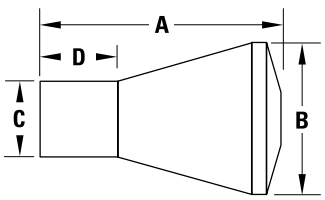

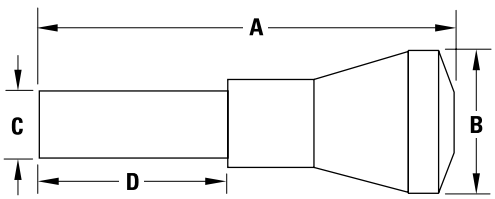

Specifications

NUMBER OF CIRCUITS & TUBING SIZES AVAILABLE	NOZZLE ORIFICE NUMBERS AVAILABLE	NOZZLE & RETAINER RING SIZE	INLET CONNECTION Inches	DISTRIBUTOR	DIMENSIONS Inches A	B	C	D
Type D260 Net Weight - Approximately 2 oz. (60 g)								
2 to 6 3/16″ 2 to 4 1/4″	1/9 thru 8	L	1/2 ODM Solder		1.96	0.81	.497/.503	0.82
Type D262 Net Weight - Approximately 3 oz. (80 g)								
7 to 9 3/16″ 5 to 6 1/4″ 2 to 4 5/16″	1/9 thru 8	L	1/2 ODM Solder		2.44	1.00	.497/.503	0.81
Type 1613 Net Weight - Approximately - Approximately 2 oz. (60 g)								
2 to 7 5/32″ 2 to 6 3/16″ 2 to 4 1/4″	1/2 thru 5	PERM.	1/2 ODM Solder		1.17	0.81	.498/.500	0.50
Type 1616 Net Weight - Approximately - Approximately 3 oz. (80 g)								
8 to 10 5/32″ 7 to 8 3/16″ 5 to 6 1/4″ 2 to 4 5/16″	1/2 thru 5	PERM.	1/2 ODM Solder		1.55	1.00	.498/.500	0.50
Type 1620 Net Weight - Approximately 2 oz. (60 g)								
2 to 6 3/16″ 2 to 4 1/4″	1/9 thru 8	J	5/8 ODM Solder		1.14	0.81	.623/.625	0.69

DISTRIBUTORS

SPORLAN – For use with all refrigerants

Specifications

NUMBER OF CIRCUITS & TUBING SIZES AVAILABLE	NOZZLE ORIFICE NUMBERS AVAILABLE	NOZZLE & RETAINER RING SIZE	INLET CONNECTION Inches	DISTRIBUTOR	DIMENSIONS Inches A	B	C	D
Type 1622 Net Weight - Approximately 3 oz. (80 g)								
7 to 9 3/16″ 5 to 7 1/4″ 2 to 4 5/16″	1/9 thru 8	J	5/8 ODM Solder		1.63	1.00	.623 .625	0.63
Type 1112 Net Weight - Approximately 4 oz. (110 g)								
5 to 7 3/16″ 4 to 6 1/4″ 2 to 4 5/16″ 2 3/8″	1/6 thru 20	G	7/8 ODM Solder		1.72	0.91	.873 .875	1.00
Type 1113 Net Weight - Approximately 5 oz. (140 g)								
8 to 12 3/16″ 7 to 8 1/4″ 5 to 6 5/16″ 3 to 4 3/8″	1/6 thru 20	G	7/8 ODM Solder		1.78	1.16	.873 .875	0.88
Type 1115 Net Weight - Approximately 9 oz. (250 g)								
11 to 15 3/16″ 9 to 10 1/4″ 7 to 9 5/16″ 5 to 6 3/8″	2 thru 30	E	1-1/8 ODM Solder		2.44	1.50	1.123 1.125	1.12
Type 1116 Net Weight - Approximately 9 oz. (250 g)								
16 to 20 3/16″ 11 to 15 1/4″	2 thru 30	E	1-1/8 ODM Solder		2.44	1.75	1.123 1.125	1.12
Type 1117 Net Weight - Approximately 1 lb. (450 g)								
16 to 18 3/16″ 11 to 15 1/4″ 9 5/16″ 7 3/8″	3 thru 50	C	1-3/8 ODM Solder		2.56	1.75	1.373 1.375	1.31
Type 1126 Net Weight - Approximately 1 lb., 6 oz. (620 g)								
19 to 24 3/16″ 15 to 18 1/4″ 10 to 15 5/16″ 8 to 12 3/8″	3 thru 50	C	1-3/8 ODM Solder		2.81	2.38	1.373 1.375	1.12
Type 1128 Net Weight - Approximately 1 lb., 10 oz. (740 g)								
25 to 28 3/16″ 19 to 25 1/4″ 16 to 21 5/16″ 13 to 16 3/8″	3 thru 50	C	1-3/8 ODM Solder		3.12	3.00	1.373 1.375	1.38
Type 1125 Net Weight - Approximately 1 lb., 14 oz. (850 g)								
25 to 28 3/16″ 19 to 24 1/4″ 16 to 20 5/16″ 13 to 16 3/8″	10 thru 50	A	1-5/8 ODM Solder		3.12	3.00	1.623 1.625	1.30
Type 1127 Net Weight - Approximately 2 lb., 4 oz. (1.0 kg)								
29 to 37 3/16″ 25 to 30 1/4″ 21 to 26 5/16″ 17 to 20 3/8″	10 thru 50	A	1-5/8 ODM Solder		3.31	3.50	1.623 1.625	1.28
Type 1143 Net Weight - Approximately 3 lb. (1.4 kg)								
29 to 40 3/16″ 31 to 36 1/4″ 27 to 30 5/16″ 21 to 24 3/8″	10 thru 50	A	1-5/8 ODM Solder		3.69	4.00	1.623 1.625	1.44

REFRIGERANT DISTRIBUTORS & AUXILIARY SIDE CONNECTORS

SPORLAN – For use with all refrigerants

Auxiliary Side Connectors

ASC-4-3, ASC-5-4, ASC-7-4, ASC-9-5, ASC-11-7, and ASC-13-9

For proper distributor type, order by complete Sporlan type listed below. E.g., an 1126 distributor requires an ASC-11-7 Auxiliary Side Connector. **Do not use an ASC that is smaller or larger than recommended. Bushing up or down at the outlet defeats the purpose of the internal nozzle tube extension. Do not use an ASC on distributors with permanent nozzles.**

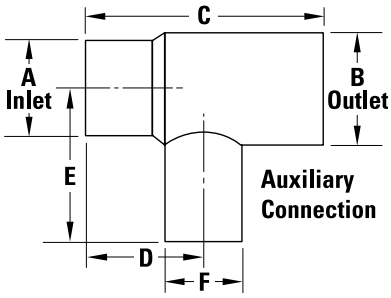

TYPE	CONNECTION SIZES - Inches			USED WITH DISTRIBUTOR TYPE	NOZZLE SIZE	DIMENSIONS Inches					
	INLET ODM SOLDER	OUTLET ODF SOLDER	AUXILIARY ODF SOLDER			A (ODM)	B (ODF)	C	D	E	F (ODF)
ASC-4-3	1/2	1/2	3/8	D260, D262	L	1/2	1/2	1.75	0.85	1.04	3/8
ASC-5-4	5/8	5/8	1/2	1620, 1622	J	5/8	5/8	1.88	0.95	1.25	1/2
ASC-7-4	7/8	7/8	1/2	1112, 1113	G	7/8	7/8	2.25	1.06	1.38	1/2
ASC-9-5	1-1/8	1-1/8	5/8	1115, 1116	E	1-1/8	1-1/8	2.81	1.47	1.62	5/8
ASC-11-7	1-3/8	1-3/8	7/8	1117, 1126, 1128	C	1-3/8	1-3/8	3.53	1.89	2.19	7/8
ASC-13-9	1-5/8	1-5/8	1-1/8	1125, 1127, 1143	A	1-5/8	1-5/8	3.72	1.83	2.75	1-1/8

Ordering Instructions

Distributors must be ordered with the complete designation: model, number and size of circuits, orifice size, and number and size of the side connection (1650 series only). Example, 1651-2-1/4-2 with one 3/8" OD side connection. The ASC designation is specified as shown above to match with the appropriate distributor. Do not attempt to use an ASC that is smaller or larger than recommended. Bushing up or down at the outlet will defeat the purpose of the internal nozzle tube extension.

Important

When adding an ASC to the solder type distributor, the nozzle must be moved from the distributor to the ASC. When the ASC-H-7 and ASC-M-9 are used the ER or CR nozzle replaces the conventional nozzle.

ELECTRONIC REFRIGERATION CONTROLLER SYSTEM

SPORLAN

Features and Benefits

- Complete package ready to control out of the box
- Integrated digital temperature control
- Conventional and advanced defrost routines
- True Pressure/Temperature Superheat
- Universal compatibility, controls all Sporlan valves (BiPolar and Unipolar)
- Watertight NEMA 4 enclosure
- RS-485 communication port allows remote verification of parameters and control
- Pluggable connectors for a quick and easy installation
- Compressor protection algorithms with FloodGuard™
- Onboard user interface with 3 digit alphanumeric display

Wiring Schematic

Introduction

The Sporlan Electronic Refrigeration Controller System (RCS) is a microprocessor-based system to precisely control refrigeration evaporators in walk in coolers and freezer applications. Its state-of-the-art design accurately controls refrigerant flow into the evaporator by means of a Sporlan Electric Expansion Value (EEV). By using precision pressure and temperature sensor inputs, the RCS is able to control evaporator temperature sensor inputs, the RCS is able to control evaporator temperature more accurately and consistently than the mechanical thermostatic expansion valves that are employed in traditional systems.

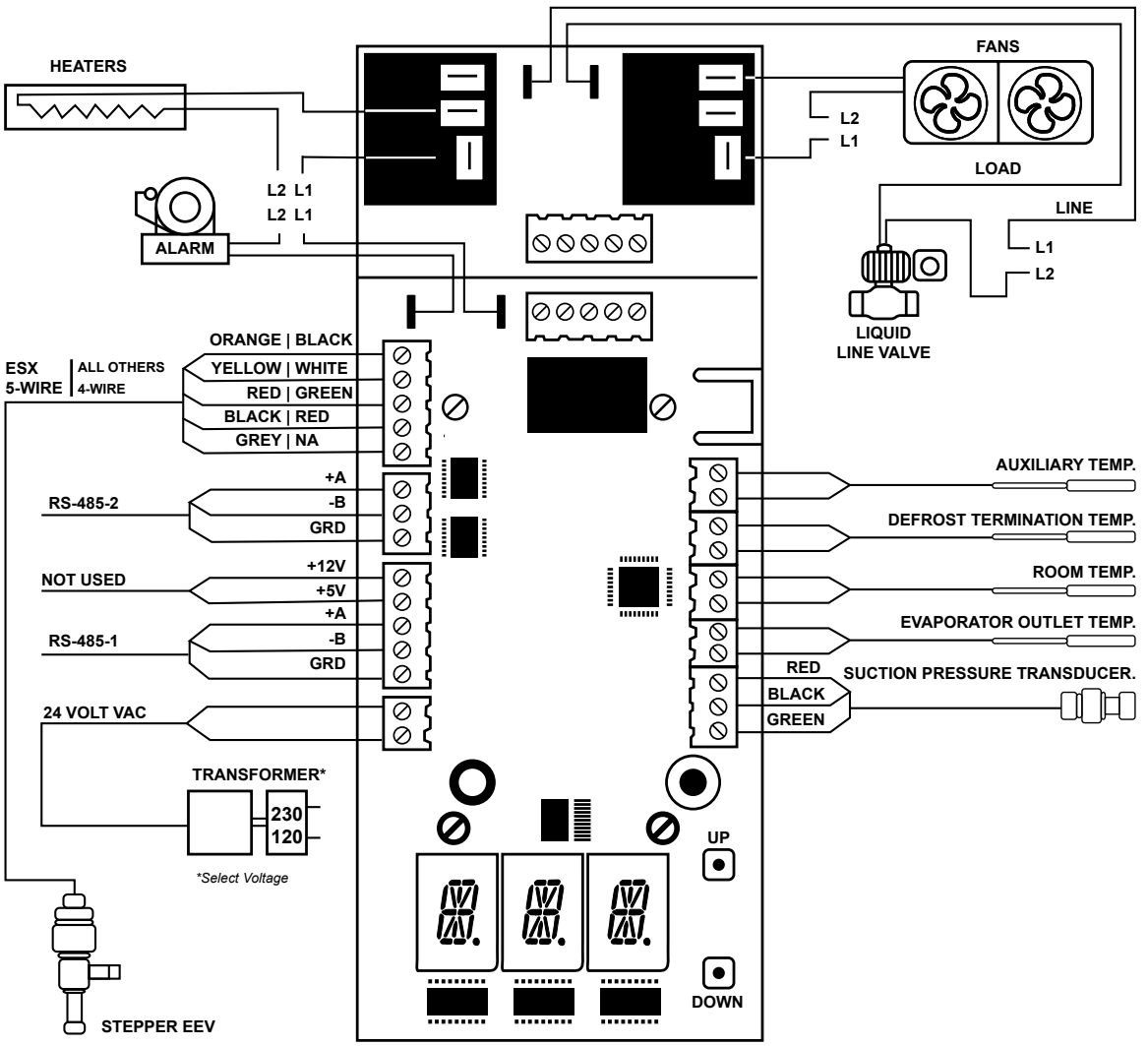

Figure 1.

SPORLAN CATCH-ALL FILTER DRIERS

Filter Driers

Installation Instructions

Installation instructions are available for the RSC controller, temperature, pressure transducer and monitoring software disk. Additional product information and updates may be found at sporlan.com

PRODUCT	FORM NUMBER
RCS Controller	SD-302
Temperature Sensor	SD-456
Pressure Transducer	SD-245
Monitoring Software Disk	SD-303

Ordering Instructions

Each RCS pacakge, part number 953170 includes:

1 - RCS Controller
1 - Dual Voltage Transformer **1 - Temperature Transducer**
3 - Temperature Sensors **1 - NEMA 4 Enclosure**

Replaceable Core Type

ODF Solder Connections

The rugged construction of the Replaceable Core Catch-All has proven itself in the field for many years. The design features include:

1. The famous **molded porous core** for maximum contaminant removal. The core cannot swell, powder or pack – assuring ease of installation and removal.
2. The **bolt and nut attachment** of the end plate provides simple trouble-free installation.



RCW-48



RCA-48
(RC-4864)



RCW-100

For Refrigerants 22, 134a, 404A, 407C, 410A, 507

3. The **internal** construction gives a one piece assembly and assures proper core alignment.
4. A **complete line** of fitting sizes – all with copper fittings.
5. **No plastic parts** are used – all internal parts are plated steel.
6. A **corrosion resistant powder paint** protects the exterior of the shell.

C UL US
LISTED

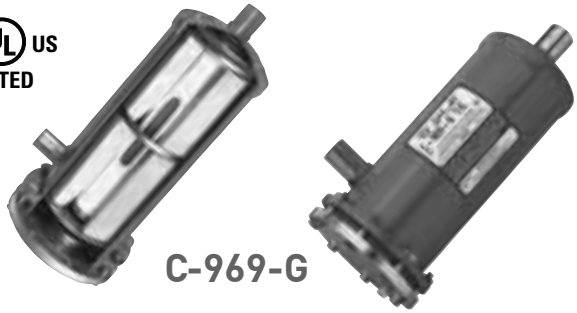

C-969-G

SPORLAN CATCH-ALL FILTER DRIERS

Specifications

TYPE	CONNECTION SIZE Inches ODF Solder	OPTIONAL SECONDARY FILTER **	NO. OF CORES OR FILTER ELEMENTS	CORE PART NUMBER	VOLUME OF DESSICANT cm^3	FILTER ELEMENT PART NUMBER	MOUNTING BRACKETS	SHELL DIMENSIONS mm								SHIPPING WEIGHT kg
								A	B	C	D	E	F	G	*P	
C-R424-G **C-R425-G** **C-R427-G**	1/2 5/8 7/8	—	1	RCW-42	688	—	A-175-1	229 232 239	121	—	172 176 183	66 69 77	71	13 16 19	13	3.0
C-R420 Series have a maximum rated pressure of 44.8 bar.																
C-485-G **C-487-G** **C-489-G** **C-4811-G** **C-4813-G**	5/8 7/8 1-1/8 1-3/8 1-5/8	FS-480	1	RCW-48, RCA-48 (RC-4864), or RC-4864-HH	787	RPE-48-BD	A-685	232 236 241 244 244	152	126	150 154 159 162 162	89 94 96 100 101	121	13 19 23 25 28	191	5.5
C-967-G **C-969-G** **C-9611-G** **C-9613-G**	7/8 1-1/8 1-3/8 1-5/8	FS-960	2		1573	RPE-48-BD	A-685	377 382 384 384	152	126	295 300 303 302	94 96 100 101	121	19 23 25 28	330	7.3
C-1449-G **C-14411-G** **C-14413-G**	1-1/8 1-3/8 1-5/8	FS-1440	3		2360	RPE-48-BD	A-685	522 525 525	152	126	443 443 443	106 109 110	121	23 25 28	473	9.1
C-19211-G **C-19213-G** **C-19217-G**	1-3/8 1-5/8 2-1/8	FS-19200	4		3146	RPE-48-BD	A-685	666 666 666	152	126	584 584 570	109 110 112	121	25 28 35	616	10.5
C-480 through C-19200 Series (including NPT pipe connections) have a maximum rated pressure of 44.8 bar.																
C-30013-G **C-30017-G**	1-5/8 2-1/8	—	3	RCW-100, RCA-100 (RC-10098), or RC-10098-HH	4916	RPE-100	A-175-2	707 708	191	159	607 610	130 135	152	28 35	651	18.2
C-40017-G **C-40021-G** **C-40025-G** **C-40029-G** **C-40033-G**	2-1/8 2-5/8 3-1/8 3-5/8 4-1/8	—	4		6555	RPE-100	A-175-2	874 893 887 887 888	191	159	775 776 757 764 757	135 146 145 146 148	152	35 38 44 39 39	816	21.4 21.4 21.4 22.3 22.3
C-30000 & C-40000 Series (including the C-40016-P) have a maximum rated pressure of 34.5 bar.																
NPT PIPE CONNECTIONS																
C-484-P **C-966-P** **C-1448-P** **C-19212-P**	1/2 3/4 1 1-1/2	—	1 2 3 4	RCW-48, RCA-48 (RC-4864), or RC-4864-HH	787 1573 2360 3146	RPE-48-BD	A-685	231 373 519 657	152	127	149 291 437 575	87 88 93 96	121	—	191 330 473 616	5.5 7.3 9.1 10.5
C-40016-P	2	—	4	RCW-100 RCA-100 (RC-10098), or RC-10098-HH	6555	RPE-100	A-175-2	875	191	159	772	111	152	—	816	23.2

$_{c}UL_{us}$ Listed — Guide-SMGT-File No. SA-1756.

* "P" Dimension is the pull space required to change core.

** Optional Secondary Filter must be purchased separately. O-rings (p/n 621-025) are supplied with each secondary filter, but can be purchased separately. The secondary filter cannot be used if the shell is installed in the suction line.

EMERSON

EX4-EX8 Electrical Control Valves

The EX4-EX8 are stepper motor driven valves that are optimized for the control of liquid or gaseous mass flow in refrigeration systems. Multifunction capability as expansion valve, hot gas bypass, suction gas throttling,head pressure, liquid line actuator and other applications systems.



Features

- Fully hermetic design
- Fast full stroke time
- Applicable to all common refrigerants (HCFC, HFC), for subcritical CO2 applications
- High resolution and excellent repeatability
- Bi-flow versions for heat pump applications
- Positive shut-off function to eliminate the use of an additional solenoid valve
- Linear flow capacity
- Wide capacity range (10 - 100%)
- Continuous modulation of mass flow, no stress (liquid hammering) in the refrigeration circuit
- Direct coupling of motor and valve for high reliability (no gear mechanism)
- Ceramic slide and port for accurate flow and minimal wear
- Balanced force design
- Corrosion resistant stainless steel body, and connections

***EXD-SH Kit Selection**

Refrigerants	Circuits	P/N	Pressure Range	Valve Type
R22, R23, R32, R124, R134a, R404A, R407A, R407C, R407F, R507	1	**920000**	22" to 100 psig	EX4 to EX8
	2	**920003**	22" to 100 psig	
R410A	1	**920001**	0 to 260 psig	
	2	**920004**	0 to 260 psig	
R744 (CO2)	1	**920002**	0 to 750 psig	EX4 to EX7 (870 psig), EX8 (653 psig)
	2	**920005**	0 to 750 psig	CX4 to CX7 (1,740 psig)

*Kits do not include valve.



		Kit Part Number					
		920000	**920003**	**920001**	**920004**	**920002**	**920005**
Description	**P/N**						
Controller EXD-SH1 (Single Circuit)	**807855**	**1**		**1**		**1**	
Controller EXD-SH2 (Two Circuit)	**807856**		**1**		**1**		**1**
EXD-M03 Molex Terminal 3.0 Metres	**807865**	**1**	**1**	**1**	**1**	**1**	**1**
EXV M60 EXV Cable Connector 6.0 Metres	**804665**	**1**	**2**	**1**	**2**	**1**	**2**
M12 Plug & Cable PT4-M60 6.0 Metres	**804805**	**1**	**2**	**1**	**2**	**1**	**2**
Pressure Transmitter PT5-50M 7/16"UNF 4-20MA Range 0-725 PSIG	**802353**					**1**	**2**
Pressure Transmitter PT5-07M 7/16"UNF 4-20MA Range 22"-100 PSIG	**802350**	**1**	**2**				
Pressure Transmitter PT5-18M 7/16"UNF 4-20MA Range 0-260 PSIG	**802351**			**1**	**2**		
Temperature Sensor ECN-N60 With 6.0 Metre Cable	**804497**	**1**	**2**	**1**	**2**	**1**	**2**
Transformer 120/208/240V TO 24V 50VA	**640-0040**		**1**		**1**		**1**
Transformer 120/208/240V TO 24V 40VA	**90-T40F3**	**1**		**1**		**1**	

EX & CX Valves

Part #	Description
800615	EX4 I21 3/8" X 5/8" ODF
800618	EX5 U21 5/8" X 7/8" ODF
800620	EX6 I21 7/8" X 1-1/8" ODF
800624	EX7 I21 1-1/8" X 1-3/8" ODF
800631	EX8 I21 1-5/8" ODF

EXD-SH1/2 Controller Accessories

Type	Description	Part #	
M12 Plug and cable for pressure transmitters PT5		**Multipack (20 pieces)**	**Single Pack**
PT4-M15	1.5 m	804803M	804803
PT4-M30	3.0 m	804804M	804804
PT4-M60	6.0 m	804805M	804805
Uninterruptible Power supply			
ECP-024	Backup battery with two outputs for two controllers	-	804558
K09-P00	Electrical Terminal Kit for ECP-024 (2 Required for 804558)		804560
EXD-PM	Super cap for only EXD-SH1 (two pieces of EXD-PM required for one EXD-SH2)		807854

ACCUMULATORS/ RECEIVERS 337-368

SOLENOID VALVES
EMERSON

200RD Solenoid Valves

The 200RD is a pilot-operated, 2-way, normally closed solenoid valve that is suitable for all refrigerants, includingR-410A. 200RD valves are used for liquid, discharge, or suction gas refrigerant service.

R- 410A



Note: Mounting enclosing tube more than 90º off vertical up position is not recommended.

See Next Page For Coils

Features

- One coil fits all valve size
- Extended ends for easy installation (standard)
- Long-life molded coils
- PTFE O-ring for superior external sealing

Options

- Available in 7 orifice size
- Manual stem or mounting stud
- Bi-Flow operation-conversion either factory assembled or with kit except 200RD 7 and 200RD 9

Specifications

- Maximum fluid temperature: 250°F
- Maximum working pressure: 680 psig
- Minimum operating pressure drop: 2 psi
- MOPD: 550 psig
- UL/CUL file number: MP604

Nomenclature example: 200RD 4T3M VLC

200R	D	4	T	3	M	VLC
Valve Series	**Design Series**	**Port Size** (in 1/16”)	**Connection Type** T = Copper Extended Ends	**Connection Size** (In 1/8”)	M = manual stem T = mounting stud (optional)	**Coil***

**NOTE: Valves are shipped without the solenoid coils (VLC = Valve Less Coil). See available coil assemblies.*

Part #	Description	Connection Size	LIST
066159	200RD 2 T 3	3/8 ODF	-
066161	200RD 3 T 3	3/8 ODF	-
066162	200RD 3 T 4	1/2 ODF	-
066163	200RD 4 T 3	3/8 ODF	-
066164	200RD 4 T 4	1/2 ODF	-
066165	200RD 4 T 5	5/8 ODF	-
066166	200RD 5 T 3	3/8 ODF	-
066167	200RD 5 T 4	1/2 ODF	-

***** More solenoid valves available***

SOLENOID COILS
EMERSON

Coils For Solenoid Valves

Features

- Compact designs
- Coil windings are insulated to provide shock and vibration protection
- ASC2 is designed to provide weather protection
- Interchangeable housings

Voltage Options

- 24V 50/60 Hz
- 120V 50/60 Hz (standard)
- 208-220/208-240V 50/60 Hz
- 480V 50/60 Hz
- 120-240V 50/60 Hz
- 12V D.C. (MM Series recommended)
- 24V D.C. (MM Series recommended)



AMG - Junction Box

Nomenclature

Coil Code		
A	**M**	**G**
Series A = 12 Watt B = 15 Watt C = 18 Watt D = 7 Watt M = 4 Watt	**Insulation** B or G = Class B M = Class F H = Class H	**Enclosure** C = Conduit Connection F = Open Frame Leads G = Junction Box L = Grommet 18" Leads S = Spade Connection

Part #	Description	Voltage/ Frequency	LIST
057341	AMG 24V 50/60 Hz	24V 50/60 Hz	-
057343	AMG 120-240V 50/60 Hz	120-240V 50/60 Hz	-

***** More coils available***

HERMETIC MOISTURE INDICATORS
EMERSON

HMI - Hermetic Moisture Indicators

The HMI is designed to provide an accurate method of determining the moisture content of a system's refrigerant. The HMI has a unique high accuracy moisture indicator for CFC, HCFC, and HFC refrigerants.

Features

- Highest sensitivity moisture indicator available
- Hermetic, leak-free construction
- Single indicator for all common refrigerants
- Accurate color calibration at low ppm levels and higher temperatures
- Wide angle viewing/high visibility window for ease of monitoring
- All brass corrosion resistant body for fewer leaks
- Solid copper connections

Specifications

- Maximum working pressure: 680 psig
- UL/CUL file number: SA 4876

R- 410A



Nomenclature example: HMI 1TT4

HMI	1	TT	4
Hermetic Moisture Indicator	Series	Connection Style TT = Sweat x Sweat	Connection Size (in 1/8")

Part #	Description	LIST
065405-CPD	HMI1-1TT2	$69.70
065406-CPD	HMI1-1TT3	$76.00
065407-CPD	HMI1-1TT4	$95.00
065408-CPD	HMI1-1TT5	$107.60
065410-CPD	HMI1-1TT7	$158.50
065411-CPD	HMI1-1TT9	$174.50

SYSTEM PROTECTORS

EMERSON

EK Liquid Line Filter Drier

R- 410A

The EK Liquid Line Filter Drier is a premium compacted bead Filter Drier with a f ne 20 micron f ne outlet pad for maximum f ltration. The EK is a premium universal replacement liquid line Filter Drier for CFC, HCFC and HFC refrigerants including R-12, R-134a, R-22, R-404A, R-407C, R-410A, R-500, R-502, and R-507.



Features

- Filtration f rst for more effective use of surface area of desiccant
- High moisture and acid removal capacity
- Solid copper connections
- Corrosion resistant epoxy powder paint finish
- Copeland® brand products approved for PO
- Shock resistant steel shell construction

Specifications

- Desiccant blend - optimized for high water capacity and acid capacity
- Filtration: 20 microns
- Maximum working pressure: 680 psig
- UL/CUL file number: SA 3124

Part #	Description	Dimensions (in)			LIST
		A	B	D	
060012-CPD	EK 032S	3.88	3.13	30.38	$51.00
060014-CPD	EK 033S	4.06	3.19	0.44	$51.00
047602-CPD	EK 052S	4.44	3.69	0.38	$63.60
047604-CPD	EK 053S	4.50	3.63	0.44	
047606-CPD	EK 082S	5.25	4.50	0.38	
047608	EK 083S	5.31	4.44	0.44	-
047610-CPD	EK 084S	5.38	4.38	0.50	
047612-CPD	EK 162S	6.19	5.44	0.38	$95.60
047614-CPD	EK 163S	6.25	5.44	0.44	
047618-CPD	EK 165S	6.56	5.31	0.63	$95.50

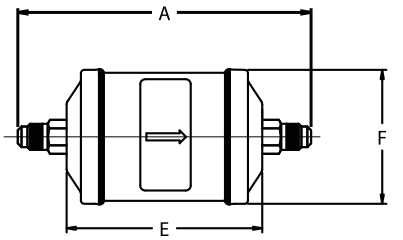

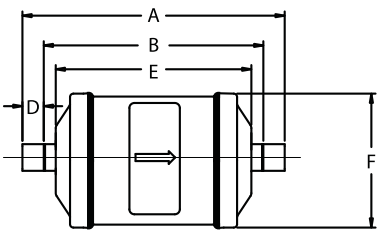

EK Cap Tube Filter Drier

R- 410A

The EK Cap Tube f lter drier is designed for foodservice refrigeration systems.



Features

- Schrader valve on the inlet side acts as a maintenance and charging port
- Outlet is designed to accept capillary tubing without the need for crimping
- Extended solid copper 1/4 ODF connection inlet by cap tube
- Incorporates all the internal features of the premium EK

Specifications

- Desiccant blend - optimized for high water capacity and acid capacity
- Filtration: 20 microns
- Maximum working pressure: 680 psig
- UL/CUL f le number: SA 3124

Part #	Description	LIST
063208-CPD	EK 032 SV CAP (3 cubic inch)	$57.30
016141-CPD	EK 032C 1/4" INLET W/CAPTUBE OUT	$46.20

FLO-CON PRESSURE REGULATORS

PARKER

Inlet Pressure

- **compact wide-range**
- **standard range A/D, 250 mm Hg to 28 bar (10" Hg to 400 psig)**



Type	Effective Port. Sizes Avail. (in.)	Connection Size (in.)
A8A	3/8, 5/8	5/8
A8A	3/8, 5/8, 7/8	7/8
A8A	3/8, 5/8, 7/8	1-1/8
A81	5/8, 7/8, 1-1/8	1-1/8
A81	7/8, 1-1/8, 1-3/8	1-3/8
A81	7/8, 1-1/8, 1-3/8	1-5/8
A81	7/8, 1-1/8, 1-3/8	2-1/8
A82	1-5/8	1-5/8
A82	1-5/8, 2-1/8	2-1/8
A82	1-5/8, 2-1/8, 2-5/8	2-5/8

Valve	Description	Typical Applications
A8-S	Inlet Pressure Regulator with Electric Shut-off	Evaporator Pressure Regulator Defrost Relief Regulator Head Pressure Control Heat Reclaim
A8-B	Inlet Pressure Regulator with Electric Wide Opening	
A8-L	Differential Pressure Regulator	Liquid Main Pressure Control Heat Reclaim Oil Return Liquid Overfeed Control
A8-BL	Differential Pressure Regulator with Electric Wide Opening	
A8-OE	Outlet Pressure Regulator Externally Equalized	Crankcase Pressure Regulator Receiver Pressure Control Heat Reclaim
A8-OES	Outlet Pressure Regulator Externally Equalized with Electrical Shut-off	

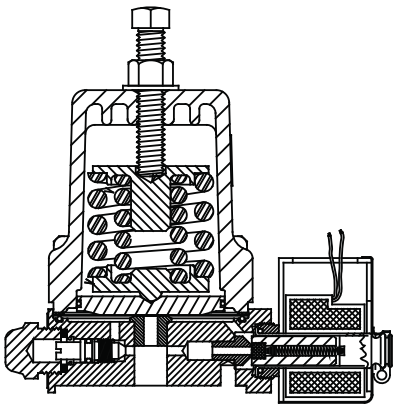

A8AB / A81B / A82B
Inlet Pressure Regulator with Electric Wide Opening

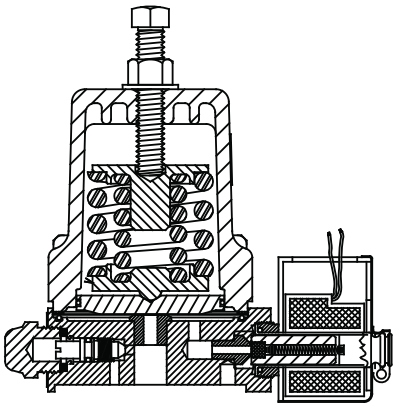

A8AS / A81S / A82S
Inlet Pressure Regulator with Electric Shut-off

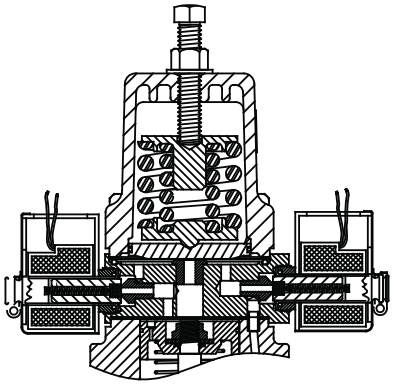

A8ABS / A81BS / A82BS
Inlet Pressure Regulator with Electric Wide Opening & Shut-off

Differential Pressure Regulators

- **Type A81L**
- **standard range "A" - 0 to 6.3 bar (0 to 90 psig)**

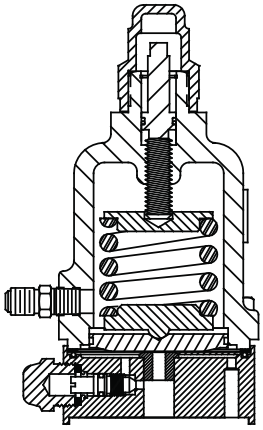

A8AL / A81L / A82L
Differential Pressure Regulator

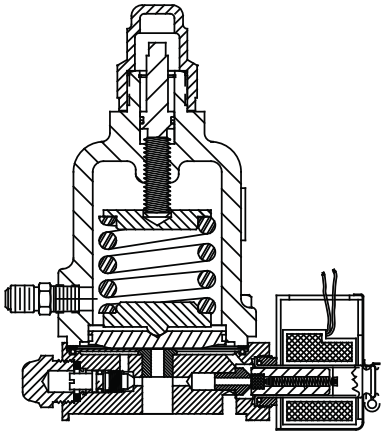

A8ABL / A81BL / A82BL
Differential Pressure Regulator with Electric Wide Opening

Outlet Pressure Regulators

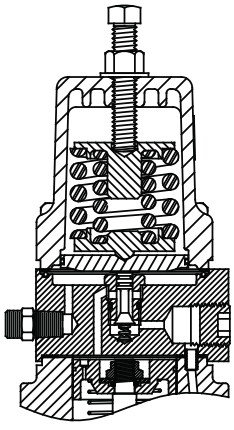

A8AOE / A81OE / A82OE
Outlet Pressure Regulator Externally Equalized

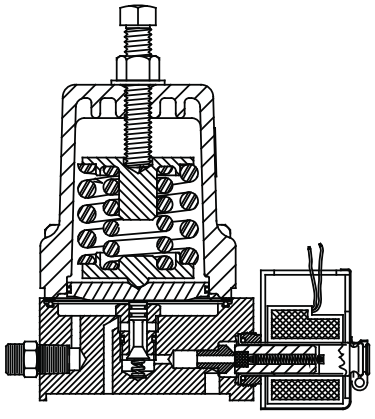

A8AOES / A81OES
Outlet Pressure Regulator with Electric Shut-off

ACCUMULATORS/ RECEIVERS 337-368

Note: When ordering a valve with a solenoid, coil must be ordered separately

FLO-CON PRESSURE REGULATORS

PARKER

Evapoator Pressure Regulator

A8 SPORT II

A8 SPORT II Evaporator Inlet Pressure Regulator with Electric Shut-off (energize coil to regulate), aluminized for reduced corrosion.



A8 SPORT

A8 SPORT Evaporator Inlet Pressure Regulator with Electric Shut-off (energize coil to regulate)



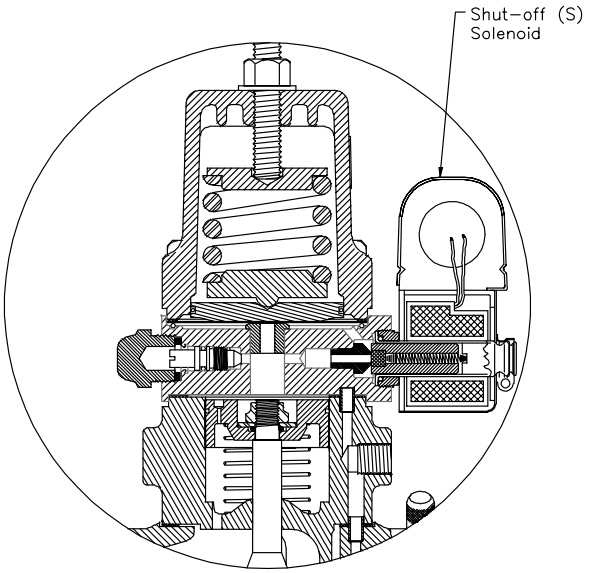

(S) PORT

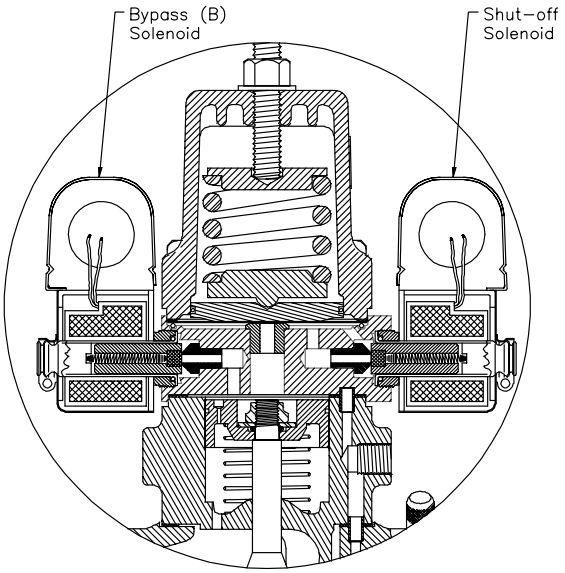

(S) PORT - B

(S)PORT Port/Connection Size Combinations

Type	Port Size			Connection Sizes Available
	Connection	Inches	mm	
(S)PORT or (S)PORT-II	03	3/8	9	07, 09, 11, 13, 17 (7/8"/22mm, 1-1/8"/28mm, 1-3/8"/35mm, 1-5/8"/42mm, 2-1/8"/54mm)
	05	5/8	15	07, 09, 11, 13, 17 (7/8"/22mm, 1-1/8"/28mm, 1-3/8"/35mm, 1-5/8"/42mm, 2-1/8"/54mm)
	07	7/8	22	07, 09, 11, 13, 17 (7/8"/22mm, 1-1/8"/28mm, 1-3/8"/35mm, 1-5/8"/42mm, 2-1/8"/54mm)
	09	1-1/8	28	07, 09, 11, 13, 17 (7/8"/22mm, 1-1/8"/28mm, 1-3/8"/35mm, 1-5/8"/42mm, 2-1/8"/54mm)
	11	1-3/8	35	09, 11, 13, 17 (1-1/8"/28mm, 1-3/8"/35mm, 1-5/8"/42mm, 2-1/8"/54mm)
(S)PORT	13	1-5/8	42	13, 17, 21 (1-5/8"/42mm, 2-1/8"/54mm, 2-5/8"/66mm)
	17	2-1/8	54	17, 21 (2-1/8"/54mm, 2-5/8"/66mm)
	21	2-5/8	66	21 (2-5/8"/66mm)

Note: (S)PORT-II regulators have same port/connection combinations as standard (S)PORT regulators but are not available in the 13, 17, or 21 port size versions.

Note: When ordering a valve with a solenoid, coil must be ordered separately

FLO-CON PRESSURE REGULATORS

PARKER



Hot Gas Bypass Regulators

- **standard range "A" - 250mm Hg to 8 bar (10" Hg to 120 psig)**
- **optional range "B" - 5.6 to 15.5 bar (80 to 220 psig)**

Type	Effective Port. Sizes Avail. (in.)	Connection Size (in.)
A9, A9E	3/8, 5/8	5/8
A9, A9E	5/8, 7/8	7/8
A9, A9E	1-1/8	1-1/8

Type	Effective Port. Sizes Avail. (in.)	Connection Size (in.)
A9S, A9SE	3/8, 5/8	5/8
A9S, A9SE	5/8, 7/8	7/8
A9S, A9SE	7/8, 1-1/8	1-1/8



FLO-CON Solenoids

S81 and S82

- **Pilot Operated**
- **Low Pressure Drop**

SC1 and SC2

- **Pilot Operated**
- **Low Pressure Drop**
- **Suction Line Solenoid**



Replacement Parts for Refrigerant Retrofit

FLO- CON Valves

Part #	Product	Replacement Parts Needed
202420	A9	Gasket Kit
203714	A8A, L Types Only	Gasket Kit/O-Ring Kit
202701	A8A, All Except L Types	Gasket Kit/O-Ring Kit
203714	A81, L Types Only	Gasket Kit/O-Ring Kit
202701	A81, All Except L Types	Gasket Kit/O-Ring Kit
203819	A82, L Types Only	Gasket Kit/O-Ring Kit
203818	A82, All Except L Types	Gasket Kit/O-Ring Kit
202701	SPORT 3 to 11, Except L Type	Gasket Kit/O-Ring Kit
203818	SPORT 13 to 21, Except L Type	Gasket Kit/O-Ring Kit
202701	SPORT II	Gasket Kit/O-Ring Kit
202701	SC 03 to 11, Solenoid Valve	Gasket Kit/O-Ring Kit
203818	SC 13 to 21, Solenoid Valve	Gasket Kit/O-Ring Kit

Solenoid Coils

Part #	Description	LIST
206004-PKR	PARKER 120V Coil	$283.10
206005-PKR	PARKER 208-240V Coil	$283.10
206007-PKR	PARKER 24V Coil	$291.30

Note: When ordering a valve with a solenoid, coil must be ordered separately

LINE VALVES

SUPERIOR VALVE

Line Valves - Diaphragm Packless Valves

All diaphragm packless valves contain metal diaphragms and backseat metal to metal when the valve is fully open. Controlled stem travel assures life-time diaphragm performance; balanced bearing surfaces and polished stem heads eliminate wear and assure smooth, easy operation. Flow is unrestricted. Because of their unique construction, Superior diaphragm packless valves can be soldered into the line without disassembly.

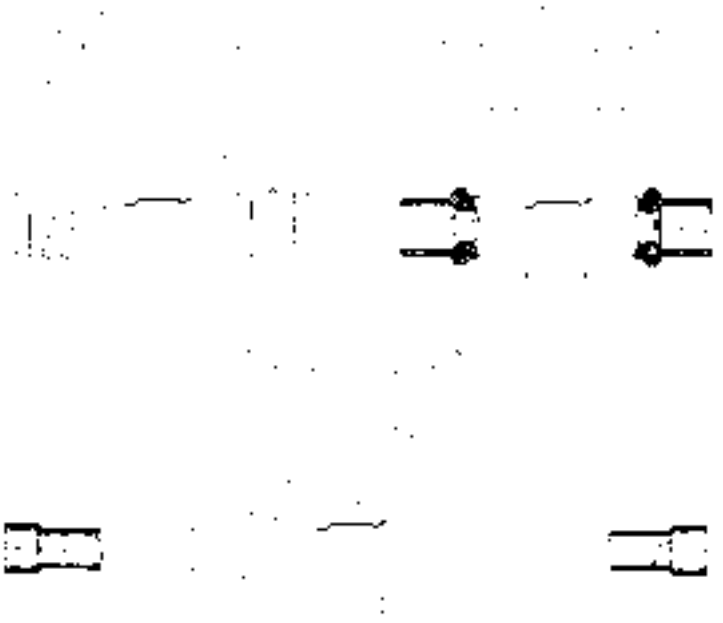

Tuffy Standard ODS x ODS Sweat

Part #	Size (inches)		LIST
	Inlet ODS	Outlet ODS	
214-4S-CBS	1/4	1/4	$151.70
214-6S-CBS	3/8	3/8	$173.10

Tuffy Standard SAE x SAE Flare

Part #	Size (inches)		LIST
	Inlet SAE	Outlet SAE	
214-4-CBS	1/4	1/4	$127.20
214-6-CBS	3/8	3/8	$127.20
215-8-CBS	1/2	1/2	
216-10-CBS	5/8	5/8	$190.00

Tuffy with tube extensions ODS x ODS Sweat

Part #	Size (inches)		LIST
	Inlet ODS	Outlet ODS	
214-4ST-CBS	1/4	1/4	$190.20
214-6ST-CBS	3/8	3/8	
215-8ST-CBS	1/2	1/2	
216-10ST-CBS	5/8	5/8	

LINE VALVES / CHECK VALVES

SUPERIOR VALVE

LPD Globe & Angle Valves



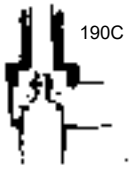

- Working pressure: 500 psig
- Body Construction: Forged brass or brass and copper
- Seat Material: Teflon
- Maximum Temperature: 400°F
- Minimum Temperature: -40°F
- Metal-to-metal back seat when fully open
- Can repack under pressure

290C Series Globe Valves ODS x ODS

Part #	Dimensions (inches)				LIST
	A	B	C	D	
290C-14S	1-13/16	15/16	31/32	5-1/4	
291C-11S-CBS	1-11/16	1	31/32	5-1/4	
292C-13S	2-5/8	1-1/16	1-5/16	7-1/16	
293C-15S	2-5/8	1-1/16	1-5/16	7-1/16	
294C-21S-CBS	3-3/8	1-1/2	1-11/16	8	
295C-25S	5-1/8	1-7/8	2-1/8	10	
296C-31S-CBS	5-1/8	1-7/8	2-1/8	10	
297C-35S	5-1/8	1-7/8	2-1/8	10	

190C Series Globe Angle Valves ODS x ODS

Part #	Dimensions (inches)				LIST
	A	B	C	D	
190C-14S	1	15/16	1-41/64	5-9/16	-
191C-11S	15/16	1	1-41/64	5-9/16	-
192C-13S	1-5/16	1-1/16	2	7-11/32	-
193C-15S	1-5/16	1-1/16	2	7-11/32	-

Type 802B Check Valves - Horizontal or Vertical Installation

The internal parts can easily be removed and reassembled after soldering. This basic "Y" type design reduces pressure drop to a very low level. The seat insert is made of teflon. A specially designed secondary seat backs up the primary seat, after approximately 10000 cycles of operation the secondary seat becomes effective. This is done to insure even better shut-off characteristics as the valve gets older. These valves may be installed in any position except upside down.

ACCUMULATORS/ RECEIVERS 337-368

802B Series Flare x Flare

Part #	Size (in.)	LIST
802B-4ST-CBS	1/4	$287.50
802B-6-CBS	3/8	$287.50
802B-8-CBS	1/2	$287.50

802B Series ODS x ODS

Part #	Size (in.)	LIST
802B-4ST-CBS	1/4	$287.50
802B-6ST-CBS	3/8	$287.50
802B-8ST-CBS	1/2	$335.00
803B-10ST-CBS	5/8	$324.00
804A-14S-CBS	7/8	$335.00

802B Series ODS x ODS Tube Extensions*

Part #	Size (in.)	LIST
802B-4ST-CBS	1/4	$287.50
802B-6ST-CBS	3/8	$287.50
802B-8ST-CBS	1/2	$335.00
803B-10ST-CBS	5/8	$324.00
804A-14ST-CBS	7/8	$637.00

* tube extensions permit valve to be silver soldered directly to line without disassembly

900MA Series Magni-Check In-Line Check Valves

- Copper connection sizes 1/4" through 2 5/8".
- Hermeticaly sealed spun copper body.
- 30 mesh screen to protect seat surface from debris.
- Full Range of Sizes.
- Magnetic Actuation.
- Arrow indicates direction of flow.
- Minimal Pressure Drop.
- U.L. and C-U.L. Recognized, File No. SA2989(N)

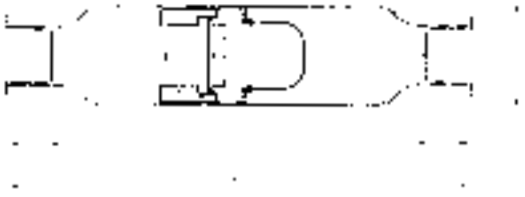

Specifications

Catalog Number	Nominal Size (in.)	Dimensions Length A (in.)	Cup/Depth B (in.)	Diameter C (in.)	Opening Pressure (oz./sq.in.)	MWP (psig)	MWP (kPa)	Burst Pressure (psig)	Leak Rate CIM @ 60 psi	Nominal Tons R22 Suction 40°F @ 1 psi	Nominal Tons R22 Liquid 40°F @ 1 psi	LIST
900MA-4S	1/4	4.00	0.31	0.875	1.2	800	5516	4000	<0.015	0.4	2.6	$99.50
900MA-6S	3/8	4.00	0.31	0.875	1.3	800	5516	4000	<0.015	0.6	3.1	$99.50
900MA-8S	1/2	5.00	0.38	1.125	3.5	640	4413	3200	<0.034	1.2	9.4	$101.00
900MA-10S	5/8	5.00	0.50	1.125	3.5	640	4413	3200	<0.034	1.4	13	$101.00
900MA-12S	3/4	7.00	0.63	1.625	3.8	560	3861	2800	<0.074	3.3	27	-
900MA-14S	7/8	7.00	0.75	1.625	3.8	560	3861	2800	<0.074	3.7	29	$222.70
900MA-11S	1 1/8	8.38	0.94	2.125	6.8	400	2758	2000	<0.122	6.0	51	$492.00
900MA-13S	1 3/8	9.38	1.00	2.625	10.2	440	3034	2200	<0.172	9.5	79	$906.00
900MA-15S	1 5/8	10.50	1.09	3.125	11.4	420	2896	2100	<0.272	17.0	102	$1,123.00
900MA-21S	2 1/8	12.00	1.34	3.625	18.1	400	2758	2000	<0.386	30.0	213	$1,547.00
900MA-25S	2 5/8	13.00	1.50	4.125	23.0	380	2620	1900	<0.512	50.0	375	$1,832.00

BALL VALVES

Mueller Streamline BALLMASTER Ball Valves

- May be used on high and low pressure refrigerant lines for either gas or liquid service
- Extended end construction permits installation without disassembling the valve.
- The ball seals on the ball valves are carbon filled teflon.
- Bi-flow direction is indicated on the side of the body of the ball valve.
- Maximum working pressure is 700 psig
- Maximum temperature range is -40°F to 300°F.





Part #	Size	A (in)	B (in)	C (in)	D (in)	E (in)	F (in)	G** (mm)	H**	LIST
A17860	3/8	5-1/2	3	5/16	7/8	2-3/4	15/16	14	M4 x .07	-
A17861	1/2	6-3/8	3-7/16	3/8	7/8	2-3/4	1-3/16	14	M4 x .07	-
A17862	5/8	6-3/8	3-7/16	1/2	7/8	2-3/4	1-3/8	14	M4 x .07	-
A17863	3/4	7-7/16	3-7/8	5/8	1-1/4	3-1/2	1-1/2	20	M4 x .07	-
A17864XHP-CFT	7/8	7-7/16	3-7/8	3/4	1-1/4	3-1/2	1-5/8	20	M4 x .07	$442.00
A17865	1-1/8	8-7/16	4-5/16	7/8	1-9/16	3-13/16	1-3/4	25	M4 x .07	-
A17866-CBS	1-3/8	10	5	1	1-1/2	4-3/16	2-1/16	30	M6 x 1.0	$458.00
A17867-CFT	1-5/8	11	5-1/2	1-1/8	1-11/16	4-7/8	2-1/4	34	M6 x 1.0	$541.00
A17868-CFT	2-1/8	12	6	1-3/8	2-1/8	5-9/16	2-7/16	34	M6 x 1.0	$877.00
A17869-CFT	2-5/8	13-1/2	6-13/16	1-1/2	***	***	***	34	M6 x 1.0	$2,293.00
A17870	3-1/8	16	8	1-3/8	3	7-3/8	3-1/8	34	M6 x 1.0	$4,116.00
A17871*	2-5/8	12	6	1-3/8	2-1/8	5-5/8	2-3/8	34	M6 x 1.0	$1,342.00
A17872*	3-1/8	12	6	1-11/16	2-1/8	5-5/8	3-1/16	34	M6 x 1.0	$1,502.00

*reduced port ** where applicable *** consult factory for details

NDL Full Port Ball Valves

- R410-A Compliant
- Furnace Brazed
- Integral Schrader Valve for Service
- Use with R12, R22, R502, R134A, and 410A.
- Temperature Range -40 F to +325 F
- Forge Body and Seal Cap
- Teflon Seal and Gaskets



Full Port Ball Valve Series
- Size available 1/4", 3/8", 1/", 5/8", 3/4"
- Specially designed and engineered for mini and multi split HVAC units.

Part #	SAE Flare	LIST
NBV14FFS-CFT	1/4"	$115.00
NBV38FFS-CFT	3/8"	$127.70
NBV12FFS-CFT	1/2"	$130.70
NBV58FFS-CFT	5/8"	$136.90
NBV34FFS	3/4"	-

Full Port Refrigeration Ball Valves
- Size available 3/8" to 4-1/8"
- "S" denotes valve with schrader



Part #	ODS		LIST
	MM	Inch.	
NBV02-S-CFT	10	1/4"	$93.00
NBV03-S-CFT	-	3/8"	$93.00
NBV04-S-CFT	-	1/2"	$93.00
NBV05-S-CFT	16	5/8"	$93.00
NBV06-S-CFT	-	3/4"	$164.30
NBV07-S-CFT	22	7/8"	$126.20
NBV09-S-CFT	-	1-1/8"	$186.10
NBV11-S-CFT	35	1-3/8"	$289.00
NBV13-S-CFT	-	1-5/8"	$322.00
NBV17-S-CFT	54	2-1/8"	$495.00
NBV21-S-CFT	67	2-5/8"	$1,905.00
NBV25-S-CFT	80	3-1/8"	$2,981.00

PRESSURE SAFETY DEVICES
HENRY TECHNOLOGIES

Relief valves:

These valves are available in standard pressure ratings of 235, 300, 350, 400, 425, & 450 psi. Other pressures are special order, sold at a higher price & are non-returnable:



Brass straight-thru type

Part #	Description
5231	3/8” MPT inlet 3/8” fl. Outlet
5231AN	3/8” MPT inlet 5/8” fl. Outlet
5232	1/2”MPT inlet 5/8” fl. Outlet
5240N	1/2” MPT inlet 3/4” FPT outlet
5242N	3/4” MPT inlet 3/4” FPT outlet
5244N	1” MPT inlet 1” FPT outlet

These pressure reliefs are also available in the following configurations: atmospheric, angle type, stainless steel, and cast iron, please contact your local branch for price & availability.

ACCUMULATORS/ RECEIVERS 337-368

Rupture disc:

Part #	Description
5525	3/8” MPT inlet 3/8” FPT outlet
5526	1/2” MPT inlet 1/2” FPT outlet
5527	3/4” MPT inlet 3/4” FPT outlet

Rupture disc are also available in steel for ammonia systems.



Gauge / Pressure Indicator

Part #	Description
G15	1/8” MPT back mount gauge assembly

3 Way valves - packed stem dual shut-off

Brass

Part #	Description
923	3/8” FPT
925	1/2” FPT
927	3/4” FPT

Steel

Part #	Description
8021A	1/2” FPT 3-way valve
8022A	3/4” FPT 3 way valve
8024	1” FPT 3-way valve

PRESSURE RELIEF VALVES

SUPERIOR VALVE

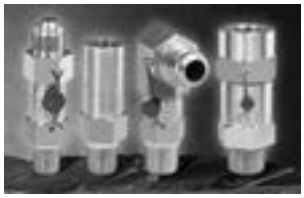

These "A" series pressure relief valves are all teflon seated, permitting their use in applications of either high or low temperature where many times the conventional rubber seated valves are completely unsatisfactory.

Type 3212A - Angle

Positive pressure relief in this large capacity angle design. Available male pipe x flare.

*Part #	Port Dia. (in.)	Size (in.)		LIST
		Inlet NPT	Outlet SAE	
3212	3/16	1/4	3/8	-
3214	3/16	3/8	3/8	$350.00
3215	3/16	3/8	1/2	$385.00
3216	9/32	3/8	1/2	$300.00
3220	9/32	1/2	5/8	$392.00

Type 3012A - Straight-Through

An industry standard for all "in-line" installations. Excellent re-seating characteristics - brass.

Part #	Port Dia. (in.)	Size (in.)		LIST
		Inlet NPT	Outlet SAE	
3012	3/16	1/4	3/8	$306.00
3014	3/16	3/8	3/8	-
3015	3/16	3/8	1/2	-
3020	9/32	1/2	5/8	$300.00

Type 3030A/3060A - Female Connection

These large size pressure relief valves with female outlet and either male or female inlet connections.

Part #	Port Dia. (in.)	Size (in.)		LIST
		Inlet NPT	Outlet FPT	
3030	7/16	1/2	1/2	-
3045	7/16	3/4	3/4	-
3060	23/32	1	1	-
3075	23/32	1-1/4	1-1/4	-

* Catalog numbers indicate style and size of pressure relief valve only - customer must specify pressure setting when ordering - standard settings are 235, 300, 350, 400, 425, 450 and 500 psig. Also available 550, 600, 650, 700, 750 and 800 psig.

DUAL PRESSURE RELIEF VALVE ASSEMBLY

Series 3155W



With the concerns over the release of refrigerants to atmosphere, dual pressure relief valves have become more common and mandated in many jurisdictions. The advantages of this device is twofold. Firstly, a pressure relief valve can now be changed when activated without having to recover the refrigerant from the system. Secondly, the contractor can easily replace the activated PRV easily and doesn't have to worry about being without a safety on the system.

Part #	Size (Inches)			LIST
	Inlet Connection (MPT)	Outlet Connection (FPT)	Ball Port Diameter	
3155W-E	3/4	3/4	10.2	$919.00

CHECK VALVES

Streamline Magnetic Check Valves



Mueller's new Magnetic Check Valve has eliminated the use of braze materials that can ultimately overheat and damage internal components. The result is a valve that can be installed with hard or soft solder and exhibits a near zero leak rate, with exceptional performance characteristics.

Part #	Capacity Tons R-22 Suction 40°F ~1 psi	Capacity Tons R-22 Liquid ~1 psi	OD Tube Size	Valve Dia.	Length	LIST
A17934	0.4	2.6	1/4"	7/8"	4"	-
A17935	0.6	3.2	3/8"	7/8"	4"	-
A17936-CFT	1.2	9.4	1/2"	1-1/8"	5-1/8"	$161.30
A17937-CFT	1.6	13.0	5/8"	1-1/8"	5-1/8"	$161.30
A17938	3.3	27.0	3/4"	1-5/8"	7"	-
A17939-CFT	3.8	29.0	7/8"	1-5/8"	7"	$419.00
A17940-CFT	6.0	51.0	1-1/8"	2-1/8"	8-3/8"	$822.00
A17941-CFT	9.5	79.0	1-3/8"	2-5/8"	9-3/8"	$1,677.00
A17942-CFT	17.0	102.0	1-5/8"	3-1/8"	10-1/2"	$1,935.00
A17943-CFT	30.0	213.0	2-1/8"	3-5/8"	12"	$2,838.00
A17944-CFT	50.0	375.0	2-5/8"	4-1/8"	13"	$3,209.00
A17981-CFT	59.0	405.0	3-1/8"	4-1/8"	13"	$4,982.00

Danfoss Check Valves



NRV styled check valve are for use in liquid, suction, and hot gas lines in refrigeration and air conditioning systems with fluorinated refrigerants.

With a compact body design and extended copper ends, this check valve allows for easy installation with minimal risk of internal damage due to heat.

Part #	Capacity Tons R-22 Suction 40°F ~1 psi	Capacity Tons R-22 Liquid ~1 psi	OD Tube Size	Valve Dia.	Length	LIST
020-1010-DAN	.30	2.2	1/4"	11/16"	3-5/8"	
020-1011-DAN	.74	5.3	3/8"	13/16"	4-5/16"	$99.00
020-1012-DAN	.90	7.6	1/2"	7/8"	5-3/16"	$109.00
020-1018-DAN	1.64	13.9	5/8"	1"	5-1/2"	
020-1019-DAN	2.75	23.5	3/4"	1-1/8"	5-7/16"	$202.10
020-1054-DAN	3.87	32.8	7/8"	1-1/8"	5-7/16"	$228.70

*A1-Superior Product, Not Danfoss

VALVES

SUPERIOR

- Packed Line Valves are designed for many miscellaneous uses in a refrigeration system.
- Valves are of all forged brass and incorporate seal caps with copper or nylon gaskets.
- Underwriter's Labratories, Inc. listed.

Part #	Bottom NPT Inlet	Side SAE Outlet	Socket for OD Tube	LIST
600A-4B	1/4"	1/4"	1/4"	$54.90
600A-4C	3/8"	1/4"	3/8"	$70.00
600A-6B	1/4"	3/8"	1/4"	$57.00
600A-6C	3/8"	3/8"	3/8"	$70.00
605-6D	1/2"	3/8"	1/2"	$173.60
605-8B	1/4"	1/2"	1/4"	-
605-8C	3/8"	1/2"	3/8"	$117.90
605-8D	1/2"	1/2"	1/2"	$120.50
606B-10D	1/2"	5/8"	1/2"	$240.40
605-KB	1/4"	1/4" (FPT)	1/4"	-

REFRIGERANT HEAT EXCHANGERS

PACKLESS

Intended for application on refrigeration systems to transfer heat between liquid refrigerant leaving the condenser on the high pressure side of the system and refrigerant vapor leaving the evaporator on the low pressure side of the system. This heat transfer may be desirable for several reasons:

(a) To raise the vapor temperature to prevent frosting or condensation on the suction line
(b) To evaporate any remaining liquid in the vapor stream to prevent possible compressor damage
(c) To subcool the liquid to prevent flash gas in the liquid line
(d) To increase system refrigerating capacity

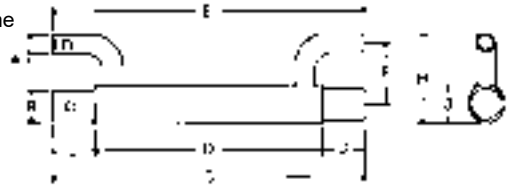

HXR Series

Model #	Nom. HP	A	B	C	D	E	F	G	H	J	LIST
HXR-25	1/2	1/4	1/2	11-1/2	10	10-1/4	1-3/16	7/8	1-3/4	3/4	$224.60
HXR-50	1	3/8	5/8	12-3/4	11	13	1-5/8	7/8	2-5/16	7/8	$254.60
HXR-75	1-1/2	3/8	7/8	13-5/8	11	13	1-3/4	1-1/8	2-9/16	1-5/16	$353.00
HXR-100	2	3/8	1-1/8	14-1/8	11	12-3/4	1-7/8	1-3/8	2-13/16	1-9/16	$454.00
HXR-150	3	1/2	1-1/8	14-1/8	11	13-3/4	2	1-3/8	3	1-9/16	$454.00
HXR-250A	5	5/8	1-3/8	14-1/4	11	14-1/4	2-3/8	1-5/8	3-9/16	1-5/8	$713.00
HXR-350A	7-1/2	5/8	1-5/8	16-1/4	12	15-1/4	2-3/8	1-5/8	3-9/16	2-1/8	$731.00
HXR-500	10	7/8	2-1/8	17-1/4	12	13	2-15/16	2-5/8	4-5/8	2-5/8	$1,328.00



LHXR Series

Model #	Nom HP	A	B	C	D	E	F	G	H	J	K	L	LIST
LHXR-15	15	7/8	2-1/8	29-1/2	24	21-3/8	3-7/16	2-7/8	6-7/8	2-3/4	1-5/16	2	$1,712.00
LHXR-20	20	1-1/8	2-1/8	29-1/2	24	21-3/8	3-7/16	2-7/8	6-7/8	2-3/4	1-5/16	2	$1,785.00
LHXR-25	25	1-1/8	2-5/8	38	32-1/2	29-3/4	3-3/4	3-1/2	7-1/2	2-3/4	1-3/8	2	$1,965.00
LHXR-30	30	1-3/8	2-5/8	38	32-1/2	29-3/4	4	3-1/2	8	2-3/4	1-3/8	2-1/4	$2,027.00
LHXR-35	35	1-3/8	2-5/8	40-1/8	34-5/8	31-7/8	4	3-1/2	8	2-3/4	1-3/8	2-1/4	$2,150.00
LHXR-40	40	1-3/8	3-1/8	31-3/4	26-1/4	22-3/4	4-3/8	4-1/4	8-3/4	2-3/4	1-3/4	2-1/4	$2,713.00
LHXR-50	50	1-5/8	3-1/8	31-3/4	26-1/4	22-3/4	4-5/8	4-1/4	9-1/4	2-3/4	1-3/4	2-1/2	$2,749.00
LHXR-60	60	1-5/8	4-1/8	38-5/8	32-5/8	29-1/8	4-3/4	4-1/2	9-1/2	3	1-3/4	2-1/2	$2,102.00
LHXR-80	80	2-1/8	4-1/8	40-7/8	34-7/8	31-3/8	5-1/4	4-1/2	10-1/2	3	1-3/4	3	-

SUCTION ACCUMULATORS
REFRIGERATION RESEARCH

Suction Accumulators

Air conditioning, heat pump, truck refrigeration and many other applications require intermittent operation of the refrigeration compressor. Especially in remote applications, the suction line may trap or hold quantities of liquid which are suddenly dumped into the compressor as it starts up. This is frequently the cause of broken valves, pistons, broken or bent connecting rods, blown gaskets and bearing washout.
Proper installation of the Refrigeration Research suction accumulator in the suction line, just before the compressor, eliminates damage. If correctly sized, relatively large quantities of liquid refrigerant may return through the suction line and the suction accumulator prevents damage to the compressor. Liquid is temporarily held in the suction accumulator and metered back to the compressor along with any oil, at a controlled rate, through the metering orifice. Therefore, damage to the compressor is prevented and the compressor immediately and quietly goes to work.
The actual refrigerant holding capacity needed for a suction accumulator is governed by the requirements of the particular application. There is a great variation in refrigeration systems and this must be considered. Where possible the capacity selected should be checked by actual test. Normally the accumulator should not be sized for less than 50% of the total system capacity.



3841, 3840

3680



3639, 3641, 3640



Suction Accumulators

Part No.	Vert. or Hor.	Dia. (in)	Length	Maximum Refrigerant Holding Capacity (lbs.)				Suction Inlet/ Outlet I.D. Size	Refrigerant								LIST
									R-410A		R-134A		R-22		R-404A		
				R-410A	R-134A	R-22	R-404A		MAX	MIN	MAX	MIN	MAX	MIN	MAX	MIN	
3680	V	3.0	8.2	1.3	1.5	1.5	1.3	1/2	0.94	0.17	0.45	0.11	0.90	0.16	0.80	0.13	$404.00
3816	V	4.0	7.1	1.9	2.2	2.1	1.9	1/2	0.65	0.15	0.31	0.09	0.62	0.14	0.58	0.10	$389.00
3817	V	4.0	11.1	3.7	4.2	4.2	3.7	1/2	0.47	0.11	0.22	0.08	0.45	0.11	0.40	0.08	$468.00
3701	V	4.0	7.1	1.9	2.2	2.1	1.9	5/8	2.10	0.19	0.90	0.13	2.00	0.18	1.55	0.15	$387.00
3702	V	4.0	11.1	3.6	4.2	4.1	3.6	5/8	0.58	0.11	0.22	0.08	0.55	0.11	0.45	0.08	$461.00
3703	V	4.0	11.4	3.5	4.1	4.0	3.7	3/4	2.21	0.19	1.03	0.11	2.1	0.18	2.0	0.18	$462.00
3670	V	4.0	11.3	3.5	4.0	4.0	3.5	7/8									$522.00
3738	V	5.0	13.2	7.0	8.0	7.9	6.9	7/8	3.15	0.47	1.62	0.30	3.0	0.45	3.0	0.45	$613.00
3826	H	6.0	13.5	11.7	13.3	13.1	11.6	7/8									$815.00
3700	V	6.0	15.0	11.5	13.1	12.9	11.4	1-1/8	4.51	0.59	1.83	0.36	4.3	0.56	4.0	0.39	$883.00
3831	H	6.0	16.5	16.0	18.1	17.9	15.7	1-1/8									$853.00
3706	V	6.0	20.3	15.6	17.8	17.5	15.4	1-3/8	8.08	1.68	3.42	0.97	7.7	1.6	7.0	0.56	$1,102.00
3743	V	6.0	24.8	20.1	22.9	22.6	19.9	1-3/8	5.25	1.36	2.16	0.87	5.0	1.3	4.5	0.47	$1,437.00
3704	V	6.0	24.8	20.1	22.9	22.6	19.9	1-5/8	19.90	2.00	8.10	1.16	19.0	1.9	18.0	1.9	$1,446.00
3642	V	8-5/8	20.0	27.5	31.3	30.9	27.2	2-1/8	43.00	5.09	18.9	3.09	41.0	5.2	39.0	5.2	$5,264.00
3838	H	6.0	36.0	27.5	31.3	30.9	27.2	2-1/8	28.30	4.51	12.6	2.51	27.0	4.3	26.0	4.3	$4,542.00
3839	H	6.0	48.0	36.8	41.3	41.0	36.4	2-1/8	18.50	3.88	7.2	2.03	18.0	3.7	16.0	3.7	$2,072.00
3643	V	10-3/4	20.0	45.2	51.4	50.7	44.7	2-5/8	65.10	8.82	29.7	5.02	62.0	8.4	60.0	8.4	$6,398.00

• Rated for 350 PSI for CE
□ Rated for 245 PSI for CE

HEAT EXCHANGER SUCTION ACCUMULATORS
REFRIGERATION RESEARCH

Heat Exchanger - Suction Accumulators

All Heat Exchanger - Suction Accumulators are complete with "Leak Pruf" fusible plug installed.

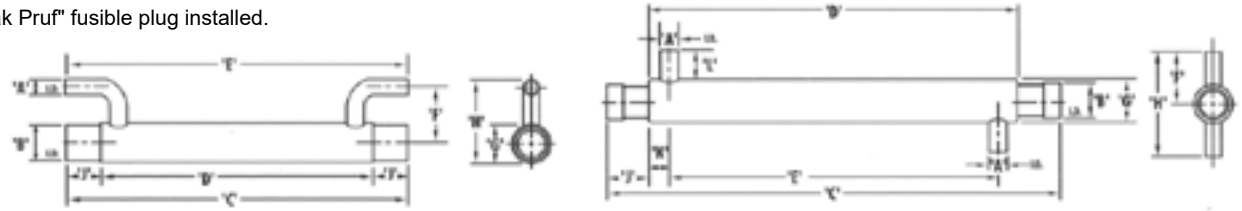

Part No.	Vert. or Hor.	Dia. (in)	Length	Maximum Refrigerant Holding Capacity (lbs.)				Suction Line I.D.	Liquid Line I.D.	Refrigerant								LIST
										R-410A		R-134A		R-22		R-404A		
				R-410A	R-134A	R-22	R-404A			MAX	MIN	MAX	MIN	MAX	MIN	MAX	MIN	
HX3702	V	4	11-1/8	3.6	4.2	4.0	3.6	5/8	3/8	0.58	0.11	0.22	0.08	0.55	0.11	0.45	0.08	$783.00
HX3703	V	4	11-3/8	3.5	4.1	4.0	3.7	3/4	3/8	1.57	0.17	0.63	0.10	1.5	0.16	1.4	0.15	$798.00
HX3738	V	5	13	7.0	8.0	7.9	6.9	7/8	1/2	3.15	0.47	1.62	0.30	3.0	0.45	3.0	0.45	$1,004.00
HX3700	V	6	15	11.5	13.1	12.9	11.4	1-1/8	5/8	6.51	0.68	2.88	0.43	6.2	0.65	6.0	0.65	$1,296.00
HX3706	V	6	20-1/4	15.6	17.8	17.5	15.4	1-3/8	5/8	11.5	2.00	5.40	1.16	11.0	1.90	10.0	1.90	$1,832.00
HX3836	H	6	22-1/2	15.2	17.3	17.1	15.1	1-3/8	5/8	5.25	1.36	2.16	0.87	5.0	1.30	4.5	1.30	$1,875.00
HX3839	H	6	48	36.8	41.3	41.3	36.4	2-1/8	7/8	18.5	3.88	7.2	2.03	18.0	3.7	16.0	3.7	$4,688.00
HX3704	V	6	24-3/4	20.1	22.9	22.6	19.9	1-5/8	3/4	19.9	2.00	8.1	1.16	19.0	1.9	18.0	1.90	$2,273.00
HX3810	H	6	30	19.0	21.6	21.3	18.8	1-5/8	3/4	8.40	1.36	3.6	0.87	8.0	1.3	7.0	1.30	$2,412.00
HX3643	V	10-3/4	20	45	51	50	44	1-3/8	2-5/8	18.50	4.41	7.20	2.70	18.00	4.20	15.00	4.20	$11,357.00

MUFFLERS
REFRIGERATION RESEARCH

Some systems are noisy due to vibration and pulsation of gas through the discharge line. To smooth out pulsations and reduce vibration and noise, Refrigeration Research offers the industry's most complete line of Discharge Mufflers.

The "MH" Series of discharge mufflers are uniquely designed for the higher pressure requirements for systems using R-410A. The tough requirements needed for these special models are made to the approved UL requirements necessary to meet the 675 p.s.i.g. working pressure.

Model #	Tons	O.D.	Overall Length	Fitting Size	LIST
MH-2	2	2	7-7/16	3/8	$234.10
MH-3	3	2	7-7/16	1/2	$255.10
MH-5	5	2	7-7/16	5/8	$320.00
MH-10	7-1/2 to 10	3	9	7/8	$407.00
MH-15	10 to 15	3	9-1/4	1-1/8	$506.00
MH-20	15 to 25	3	13-3/4	1-3/8	$587.00
M-30	25 to 50	4	16	1-5/8	$705.00
M-60	50 to 75	6	26-1/2	2-1/8	$2,130.00
M-80	75 to 100	6	28	2-5/8	-
M-110	100 to 125	6	36	3-1/8	$2,689.00



COAXIAL CONDENSERS

PACKLESS

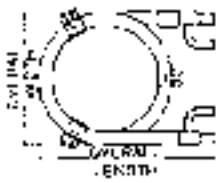



Helix with Bracket

Model No.	Nom'l Tons	Refrigerant Connection In/Out (I.D)	Water Connection In/Out (I.D)	Overall Dimensions			LIST
				Length	Height	Width	
COAX-2051H	1/2	3/8	1/2	9-15/16	5-1/8	6-5/8	$459.00
COAX-2076H	3/4	3/8	1/2	9-15/16	6	6-5/8	$515.00
COAX-2101H	1	3/8	1/2	9-15/16	6-15/16	6-5/8	$641.00
COAX-2151H	1-1/2	3/8	5/8	13-5/16	6-7/16	10-3/16	$805.00

Double Wound Helix with Brackets

Model No.	Nom'l Tons	Refrigerant Connection In/Out (I.D)	Water Connection In/Out (I.D)	Overall Dimensions			LIST
				Length	Height	Width	
COAX-2201J	2	3/8	5/8	12-15/16	3-7/8	10-5/8	$1,020.00
COAX-2251J	2-1/2	1/2	3/4	12-7/16	5-1/8	10-3/8	$1,183.00
COAX-2301J	3	5/8	7/8	13-7/8	5-1/16	12-5/16	$1,319.00
COAX-2351J	3-1/2	5/8	7/8	14-1/4	6-1/8	12-3/8	$1,589.00
COAX-2401J	4	5/8	7/8	16-1/4	4-15/16	14-1/8	$2,107.00
COAX-2501J	5	3/4	1-1/8	17	6	15-3/8	$2,455.00
COAX-2601J	6	3/4	1-1/8	17-3/4	7-1/4	15-1/4	$2,903.00
COAX-2751J	7-1/2	3/4	1-1/8	18	7-3/8	17-1/2	$3,633.00

Spiral

Model No.	Nom'l Tons	Refrigerant Connection In/Out (I.D)	Water Connection In/Out (O.D)	Overall Dimensions			LIST
				Length	Height	Width	
COAX-2100-S	1	3/8	1/2	11-5/8	2-1/8	9-3/8	-
COAX-2150-S	1-1/2	3/8	5/8	13-7/8	2-3/8	11-3/8	$774.00
COAX-2200-S	2	3/8	5/8	14-3/8	2-3/8	11-1/2	$989.00
COAX-2250-S	2-1/2	1/2	3/4	16-7/16	2-11/16	13-1/4	$1,152.00
COAX-2300-S	3	5/8	7/8	15-5/8	2-7/8	13-9/16	$1,279.00
COAX-2350-S	3-1/2	5/8	7/8	17-1/4	2-7/8	15-5/16	$1,279.00
COAX-2400-S	4	5/8	7/8	18-1/8	3-3/16	15-1/2	-
COAX-2500-S	5	3/4	1-1/8	19-5/8	3-11/16	17-1/16	-
COAX-2600-S	6	3/4	1-1/8	20-3/8	3-11/16	18-7/16	-
COAX-2751J-AMT	7-1/2	3/4	1-1/8	22-1/2	3-7/8	21-1/8	

Multi-Coil Assemblies

Model No.	Nom'l Tons	Refrigerant Connection In/Out (I.D)	Water Connection In/Out (I.D)	Overall Dimensions			LIST
				Length	Height	Width	
COAX-3010S	10	1-3/8	2-1/8	21-9/16	17-3/8	11-1/4	$5,116.00
COAX-3012S	12-1/2	1-3/8	2-1/8	22-5/16	18-3/4	11-1/4	$6,315.00
COAX-3015S	15	1-3/8	2-1/8	24-7/16	21-3/8	11-7/8	$7,894.00
COAX-3020S	20	1-5/8	2-5/8	22-1/16	17-7/8	18-3/4	$10,975.00
COAX-3025-S-AMT	25	1-5/8	2-5/8	22-13/16	19-1/4	18-3/4	$13,170.00
COAX-3030S-RSL	30	1-5/8	2-5/8	25-1/16	21-7/8	20-1/8	

CONDENSERS

COCX Cupronickle Condensers



Helix Dimensions

Model No.	Nom'l Ton	Dimensions			Connections		LIST
		Width	Length	Height	Refrigerant in/out	Water (ods)	
COCX-2051H	1/2	6-5/8	9-15/16	5-1/8	3/8	1/2	$619.00
COCX-2076H	3/4	6-5/8	9-15/16	6	3/8	1/2	$695.00
COCX-2101H	1	6-5/8	9-15/16	6-15/16	3/8	1/2	$866.00
COCX-2151H	1-1/2	10-3/16	13-5/16	6-7/16	3/8	5/8	$1,086.00



Double Wound Helix Dimensions

Model No.	Nom'l Ton	Dimensions			Connections		LIST
		Width	Length	Height	Refrigerant in/out	Water (ods)	
COCX-2201J-AMT	2	10-5/8	12-15/16	3-7/8	3/8	5/8	$1,377.00
COCX-2251J	2-1/2	10-3/8	12-7/16	5-1/8	1/2	3/4	$1,597.00
COCX-2301J	3	12-5/16	13-7/8	5-1/16	5/8	7/8	$1,781.00
COCX-2351J	3-1/2				5/8	7/8	$2,146.00
COCX-2401J	4	14-1/8	16-1/4	4-15/16	5/8	7/8	$2,845.00
COCX-2501J	5				5/8	1-1/8	$3,314.00
COCX-2601J	6	15-1/4	17-3/4	7-1/4	3/4	1-1/8	$3,919.00
COCX-2751J	7-1/2	17-1/2	18	7-3/8	3/4	1-1/8	$4,905.00
COCX-3010S	10	17-3/16	21-3/16	13-15/16	1-1/8 OD	1-5/8	$6,907.00

ICE MACHINE CONDENSERS
PACKLESS

Exact Replacement For Most Ice Machines
Exact Drop In For Manitowac

Model No.	Lbs. Ice per day	Refrigerant Connection I.D.	Water Connection O.D.	Overall Dimensions			LIST
				Length	Height	Width	
COCX-0934-H	150	1/4	1/2	9-7/8	5-5/8	6-5/8	
COCX-0945-H	200,250,320	1/4	1/2	9-7/8	6-5/8	6-5/8	$858.00
COCX-0946-H	400,420,450	1/4 & 3/8	1/2	9-7/8	7-11/16	6-5/8	$1,087.00
COCX-1074-H	600	1/4 & 3/8	1/2	11-13/16	6-3/8	8-11/16	$1,173.00
COCX-1078-H	800	1/4 & 3/8	5/8	12-1/4	8-1/8	9-3/16	$1,760.00
COCX-1079-H	1000	1/4 & 3/8	5/8	12-1/2	9-1/2	9-3/8	$2,046.00
COCX-0968-H	1300	3/8 & 1/2	3/4	13-15/16	7-1/2	10-7/8	-
COCX-1044-H	1800	3/8 & 1/2	3/4	13-15/16	8-13/16	10-7/8	-

POOL HEATERS

Pool Heaters

- High effieicncy corrugated titanium coil
- Corrosion resistant PVC plastic shell
- 600 psig DWP coil suitable for R-410A and other refrigerants at 200F maximum
- Handles up to 75 psig pool loops @ 55 gpm maximum
- Easy installation with 5/8" OD sweat copper and 2" female socket connections



Part #	HP	Refrig. Conn.	Water Conn.	Weight	LIST
PH-70-DOU	3	5/8" OD	2" SW	30	$3,029.00
PH-95-DOU	5	5/8" OD	2" SW	30	$3,268.00

CONDENSERS

Refrigeration Research Condenser - Receivers



5803

Water circulates through finned copper tubes

Part #	Length Over End Caps	Dia.	† Tons	Refrigerant Inlet	Refrigerant Outlet	Water Connections	*Receiver PumpDown Capacity	LIST
5803	14	5	1/2	3/8 flare	1/4 valve	1/2 SAE Fem. Flare	7 lbs	$3,472.00
5806	14	6	3/4	3/8 flare	3/8 valve	1/2 SAE Fem. Flare	11 lbs	$2,553.00
5802	16-1/4	6	1	3/8 flare	3/8 valve	1/2 SAE Fem. Flare	14 lbs	$4,520.00
5804	24	6	1-1/2	3/8 flare	3/8 valve	1/2 SAE Fem. Flare	19 lbs	$3,300.00

† Tons rating for 105°F water delivery *90% at 90° for R22 and R502 - for R12 and R134a multiply by 1.1 - For 402b and R404a multiply by 0.9

SW Marine Tube-in-Tube Condensers

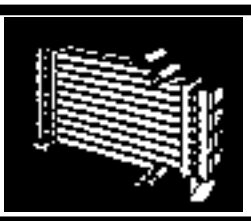

Model No.	Nom'l H.P.	Shipping Weight (lbs.)	Dimensions			Connections			LIST
						Refrig.		Water	
			Width	Length	Height	Inlet	Outlet	In/Out	
SW-1/3	1/3	8	2	18	8-7/8	3/8	3/8	5/8	-
SW-1/2	1/2	9	2	22	8-7/8	3/8	3/8	5/8	-
SW-3/4	3/4	12	2	22	11-3/4	3/8	3/8	5/8	-
SW-1	1	16	2	22	14-9/16	1/2	3/8	5/8	-
SW-1-1/2	1-1/2	18	2	23	17-7/16	1/2	3/8	5/8	-
SW-2	2	30	2	22	17-7/16	1/2	1/2	7/8	-
SW-2-1/2	2-1/2	33	2	26	17-7/16	5/8	1/2	7/8	-
SW-3	3	36	2	30	17-7/16	5/8	1/2	7/8	-
SW-3-1/3	3-1/3	37	2	33	17-7/16	5/8	1/2	7/8	-
SW-3-3/4	3-3/4	40	2	36	17-7/16	5/8	5/8	7/8	-
SW-4	4	42	2	38	17-7/16	5/8	5/8	7/8	-
SW-4M2	4	62	4	22	17-11/16	1-1/8	5/8	1-1/8	-
SW-5M2-1/2	5	68	4	26	17-11/16	1-1/8	5/8	1-1/8	-
SW-6M3	6	74	4	30	17-11/16	1-1/8	7/8	1-1/8	$9,390.00
SW-7-1/2M2-1/2	7-1/2	102	6	26	17-11/16	1-1/8	7/8	1-3/8	$11,108.00
SW-7-1/2M3-3/4	7-1/2	84	4	36	17-15/16	1-3/8	7/8	1-3/8	$8,381.00
SW-8M4	8	86	4	38	17-11/16	1-1/8	7/8	1-3/8	-
SW-9M3	9	110	6	30	17-11/16	1-1/8	7/8	1-5/8	-
SW-10M2-1/2	10	136	8	26	17-15/16	1-3/8	1-1/8	2 FPT	-
SW-10M3-1/3	10	113	6	33	17-11/16	1-1/8	7/8	1-5/8	-
SW-12M4	12	128	6	38	17-11/16	1-1/8	7/8	1-5/8	-
SW-15M3-3/4	15	168	8	36	17-15/16	1-3/8	1-1/8	2 FPT	-
SW-16M4	16	172	8	38	17-15/16	1-3/8	1-1/8	2 FPT	-
SW-20M4	20	214	10	38	19-3/16	1-3/8	1-1/8	2 FPT	-
SW-26-1/4M3-3/4	26	290	14	36	19-3/16	1-5/8	1-5/8	2 FPT	-
SW-30M3-3/4	30	340	16	36	19-3/16	2-5/8	1-5/8	2 FPT	-
SW-36M4	36	390	18	38	19-3/16	2-5/8	1-5/8	2 FPT	-
SW-40M4	40	430	20	38	19-3/16	2-5/8	1-5/8	2 FPT	-

ROTALOCK VALVES
STANDARD

Valves Rotalock

Horizontal

Part #	Connection	Coupling Size	LIST
H03FT	3/8 Flare	3/4 - 16	$185.10
H04FT	1/2 Flare	1 - 14	-
H05FT	5/8 Flare	1 - 14	-
H04ST	1/2 ids	1 - 14	
H05ST	5/8 ids	1 - 14	$218.00
H07ST	7/8 ids	1-1/4 - 12	$325.00
H09ST	1-1/8 ids	1-1/4 - 12	$343.00
H11ST	1-3/8 ids	1-3/4 - 12	-



Vertical

Part #	Connection	Coupling Size	LIST
V03FT	3/8 Flare	3/4 - 16	$78.90
V04FT	1/2 Flare	1 - 14	-
V05FT	5/8 Flare	1 - 14	-
V04ST	1/2 ids	1 - 14	$205.60
V05ST	5/8 ids	1 - 14	-
V07ST	7/8 ids	1-1/4 - 12	-
V09ST	1-1/8 ids	1-1/4 - 12	$246.80
V11ST	1-3/8 ids	1-3/4 - 12	-



Brass Adaptors

Part #	Connection		Thread Size	LIST
	ids	ods		
BA03X06-PWR	3/8	1/2	3/4 - 16	
BA03X08-PWR	3/8	1/2	1 - 14	$128.80
BA04X08-PWR	1/2	5/8	1 - 14	$109.80
BA05X08-PWR	5/8	7/8	1 - 14	$265.20
BA05X10-PWR	5/8	7/8	1-1/4 - 12	$177.00
BA07X10-PWR	7/8	1-1/8	1-1/4 - 12	$253.60
BA09X10-PWR	1-1/8	1-3/8	1-1/4 - 12	$109.80
BA09X14-PWR	1-1/8	1-3/8	1-3/4 - 12	$209.20
BA11X14-PWR	1-3/8	1-5/8	1-3/4 - 12	$446.00



BRAZED PLATE HEAT EXCHANGERS

DOUCETTE



Brazed Plate Heat Exchangers

Evaporators

Model No.	Nom'l* TR	Width	Height	Depth	Refrig. O.D.F.	Refrig. O.D.F.	Shipping Wt. (lbs)	LIST
BP-1/2-DOU	1/2	3.5	12.8	2	5/8	7/8	4	
BP-3/4	3/4	3.5	12.8	2.2	5/8	7/8	5	
BP-1-DOU	1	3.5	12.8	2.6	5/8	7/8	5	
BP-1-1/2	1-1/2	3.5	12.8	3.2	5/8	1-1/8	6	
BP-1-1/2	2	3.5	12.8	3.2	5/8	7/8	6	
BP-2	2-1/2	3.5	12.8	3.6	5/8	7/8	7	
BP-3	3	4.9	13.1	3.2	7/8	1-1/8	9	
BP-3-1/2	3-1/2	4.9	13.1	3.6	7/8	1-1/8	10	
BP-5	4	4.9	20.8	3.2	7/8	1-3/8	15	
BP-6-DOU	5	4.9	20.8	3.6	7/8	1-3/8	17	
BP-7-1/2	6	4.9	20.8	4.1	1-3/8	1-3/8	20	
BP-8	7-1/2	4.9	20.8	4.5	1-3/8	1-3/8	22	
BP-12	10	4.9	20.8	5.4	1-3/8	1-3/8	28	
BP-14E	12-1/2	4.9	20.8	6.9	1-3/8	1-3/8	36	
BP-15E	15	4.9	20.8	7.9	1-3/8	1-3/8	41	
BP-25E	20	4.9	20.8	10.7	1-3/8	1-3/8	57	
BP-30E	25	10.6	20.8	6	2-1/8	2-1/8	78	
BP-35E	30	10.6	20.8	6.9	2-1/8	2-1/8	91	

* Performance: Cool 2.4 GPM/TR water from 54°F to 44°F with R-22 at 35°F evaporating temperature with 6°F superheat

Condensers

Model No.	Nom'l† TR	Width	Height	Depth	Refrig. O.D.F.	Refrig. O.D.F.	Shipping Wt. (lbs)	LIST
BP-1/2	1/2	3.5	12.8	2	5/8	7/8	4	
BP-3/4	3/4	3.5	12.8	2.2	5/8	7/8	5	
BP-1	1	3.5	12.8	2.6	5/8	7/8	5	
BP-1-1/2	1-1/2	3.5	12.8	3.2	5/8	7/8	6	
BP-2	2	3.5	12.8	3.6	5/8	7/8	7	
BP-2-1/2	2-1/2	3.5	12.8	4.1	5/8	7/8	8	
BP-3-1/2	3	4.9	13.1	3.6	7/8	1-1/8	10	
BP-3-1/2	3-1/2	4.9	13.1	3.6	7/8	1-1/8	10	
BP-5	4	4.9	20.8	3.2	7/8	1-3/8	15	
BP-5	5	4.9	20.8	3.2	7/8	1-3/8	15	
BP-6	6	4.9	20.8	3.6	7/8	1-3/8	17	
BP-7-1/2	7-1/2	4.9	20.8	4.1	1-3/8	1-3/8	20	
BP-10	10	4.9	20.8	5.1	1-3/8	1-3/8	26	
BP-12-1/2	12-1/2	4.9	20.8	6	1-3/8	1-3/8	31	
BP-15C	15	4.9	20.8	7.9	1-3/8	1-3/8	41	
BP-20	20	4.9	20.8	8.8	1-3/8	1-3/8	47	
BP-25C	25	4.9	20.8	10.7	1-3/8	1-3/8	57	
BP-30	30	10.6	20.8	6	2-1/8	2-1/8	78	

† Performance: Condense R-22 at 105°F using 3 GPM/HP of water at 85°F

BRAZED PLATE HEAT EXCHANGERS

SWEP

Brazed Plate Heat Exchangers



Part #	Capacity	Glycol Side Press. Drop	Glycol side Connections	Refrigerant Inlet	Refrigerant Outlet	LIST
B10THX14/1P-SC-M-SWE	1 TR	0.49 psi	1" mpt	1/4" solder	7/8" solder	$1,363.00
B10THX20/1P-SC-M-SWE	1.5 TR	0.54 psi	1" mpt	3/8" solder	7/8" solder	$836.00
B10THX26/1P-SC-M-SWE	2 TR	1.5 psi	1" mpt	3/8" solder	7/8" solder	$1,568.00
B80HX16/1P-SC-M-SWE	2.5 TR	2.26 psi	1 1/4" MNPT	1/2" solder	7/8" solder	$1,715.00
B80HX18/1P-SC-M-SWE	3 TR	3.1 psi	1 1/4" MNPT	1/2" solder	7/8" solder	$1,251.00
B80HX20/1P-SC-M-SWE	3.5 TR	4.1 psi	1 1/4" MNPT	5/8" solder	1 3/8" solder	$2,001.00
B80HX30/1P-SC-M-SWE	4 TR	2.6 psi	1 1/4" MNPT	5/8" solder	1 3/8" solder	$1,882.00
	5 TR	3.8 psi	1 1/4" MNPT	5/8" solder	1 3/8" solder	
B80HX40/1P-SC-M-SWE	6.5 TR	3.7 psi	1 1/4" MNPT	5/8" solder	1 3/8" solder	$3,026.00
V80X52/1P-SC-M-RSL	7.5 TR	3.0 psi	1 5/8" Solder	7/8" solder	1 3/8" solder	
	10 TR	5.1 psi	1 5/8" Solder	7/8" solder	1 3/8" solder	

30% Prop. Glycol in: 54 deg. F and out at 44 deg. F
R404a: SST = 35 deg. F with 9 deg. F superheat. Liquid to valve at 115 deg. F

ACCUMULATORS/ RECEIVERS 337-368

RECEIVERS

REFRIGERATION RESEARCH

Receivers

Part #	Diameter & Length Over End Caps	*Pump Down Capacity	Inlet	Outlet	Mount	LIST
1911	6 x 12	10 lbs	3/8 SAE	3/8 SAE	Vertical	$807.00
1917	3-1/2 x 10	3 lbs	1/4 SAE	1/4 SAE	Vertical	$467.00
1918	5 x 10	6 lbs	1/4 SAE	1/4 SAE	Vertical	$604.00
1920	3-1/2 x 7-1/2	2 lbs	1/4 SAE	1/4 SAE	Vertical	$451.00
1921	4 x 10	4 lbs	1/4 SAE	1/4 SAE	Vertical	$544.00
3212	6 x 18	16 lbs	1/2 SAE	1/2 SAE	Vertical	$1,065.00
5315	5 x 10	6 lbs	3/8 SAE	3/8 SAE	Vertical	$604.00
1915	5 x 18	12 lbs	1/4 Sweat	3/8 SAE	Horizontal	$895.00
1916	4 x 19	8 lbs	1/4 Sweat	1/4 SAE	Horizontal	$776.00
1923	5 x 23	15 lbs	1/2 Sweat	1/2 SAE	Horizontal	$1,138.00



1911
1917
1918
1920
1921
3212
5315



1915, 1916



1923

*90% at 90° for R22, R134a and R502 - for R12 multiply by 1.1 - For 402b and R404a multiply by 0.9

High Pressure Receivers

Part #	R410A Pump Down Capacity*	"A" Diameter	"B" Length	Figure	Inlet & Outlet Connection	Leek Pruf Fusible Plug	LIST
3307-ALL	1.8 lbs	3"	10"	II	3/4" Rotalock	Not Required	$605.00
3308-ALL	3.6 lbs	4"	10"	II	1" Rotalock	Installed	$815.00
3309-ALL	5.5 lbs	5"	10"	II	1" Rotalock	Installed	$923.00
3310-ALL	9.0 lbs	6"	12"	II	1" Rotalock	Installed	$1,103.00
3377-ALL	14.0 lbs	6"	18"	II	1" Rotalock	Installed	$1,261.00
3378-ALL	19.3 lbs	6"	24"	II	1" Rotalock	Installed	$1,367.00
3379-ALL	24.6 lbs	6"	30"	II	1" Rotalock	Installed	$1,581.00

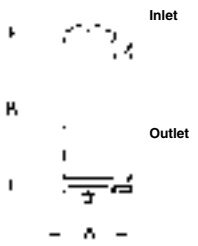

FIGURE I

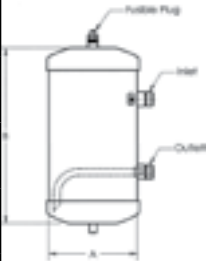

FIGURE II

BITZER PRODUCTS



Vertical / Horizontal
Receivers



Primary Oil Separators



Centrifugal Oil Separators

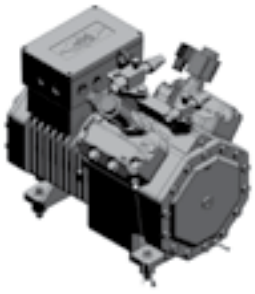

Single Stage
Semi-Hermetic Compressor

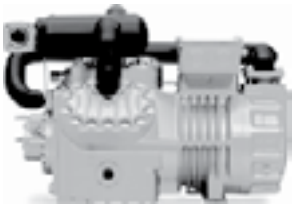

Two Stage
Semi-Hermetic Compressor



Scroll Compressor
Single / Tandem / Trio



Compact Screw



Compact Screw w/ VFD



HSK Screw

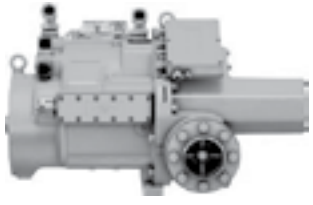

Open Drive Screw



Eco Star Condensing Units
Full VFD



A.C.P.
Ammonia Package Units

Please see your local REFRIGERATIVE SUPPLY branch for details

RECEIVERS

BITZER

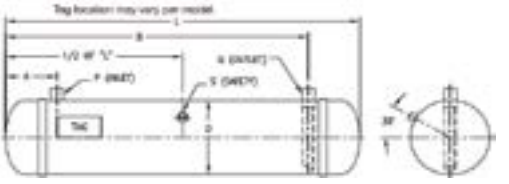

Horizontal Receivers (Standard and with Rotolock)

Model No.	Vessel Dimensions		Pumpdown Capacities					Weight	Valve Conection Size (IDS)**		Safety NPT in.	Replacement rotolock valves	
	OD	Length	R134a lb	R407C lb	R404A lb	R507 lb	R22 lb		Inlet	Outlet		Inlet	Outlet
BH0014XL-RXX	6 5/8	30	31.8	29.6	27.7	30.5	33.3	64	5/8	5/8	1/2	5/8" 1-14 UNS	5/8" 1-14 UNS
BH0017XL-RXX	6 5/8	36	38.4	3S.8	33.4	36.9	40.3	82	5/8	5/8	1/2	5/8" 1-14 UNS	5/8" 1-14 UNS
BH0030XL-RXX	8 5/8	36	65.9	61.7	57.7	63.9	69.5	91	7/8	7/8	1/2	7/8" 1 1/4-12 UNF	7/8" 1 1/4-12 UNF
BH0035XL-RXX	8 5/8	42	77.5	72.5	67.8	74.3	81.6	106	1 1/8	1 1/8	1/2	1 1/8" 1 1/4-12 UNF	1 1/8" 1 1/4-12 UNF
BH0041XL-RXX	8 5/8	48	89.1	83.3	77.9	85.4	93.8	120	1 1/8	1 1/8	1/2	1 1/8" 1 1/4-12 UNF	1 1/8" 1 1/4-12 UNF
BH0051XL-RXX	8 5/8	60	112.3	104.9	98.1	107.7	118.1	150	1 1/8	1 1/8	1/2	1 1/8" 1 1/4-12 UNF	1 1/8" 1 1/4-12 UNF
BH0062XL-RXX	8 5/8	72	135.5	126.5	118.3	129.9	142.4	197	1 1/8	1 1/8	1/2	1 1/8" 1 1/4-12 UNF	1 1/8" 1 1/4-12 UNF
BH0046XL-RXX	10 3/4	36	101.8	94.1	88	97.7	105.9	167	1 1/8	1 1/8	1/2	1 1/8" 1 1/4-12 UNF	1 1/8" 1 1/4-12 UNF
BH0063XL-RXX	10 3/4	48	137.7	127.4	119.1	132.0	143.4	220	1 1/8	1 1/8	1/2	1 1/8" 1 1/4-12 UNF	1 1/8" 1 1/4-12 UNF
BH0078XL-RXX	10 3/4	60	173.5	160.8	150.3	166.4	180.9	273	1 1/8	1 1/8	1/2	1 1/8" 1 1/4-12 UNF	1 1/8" 1 1/4-12 UNF
BH0095XL-RXX	10 3/4	72	209.3	194.1	181.5	200.8	218.5	325	1 1/8	1 1/8	1/2	1 1/8" 1 1/4-12 UNF	1 1/8" 1 1/4-12 UNF
BH0111XL-RXX	10 3/4	84	245.2	227.4	212.6	235	256	378	1 3/8	1 3/8	1/2	1 3/8" 1 3/4-12 UN	1 3/8" 1 3/4-12 UN
BH0127XL-RXX	10 3/4	96	281.0	260.8	243.8	269.5	293.5	445	1 3/8	1 3/8	1/2	1 3/8" 1 3/4-12 UN	1 3/8" 1 3/4-12 UN
BH0084XL-RXX	12 3/4	48	184.6	172.8	161.5	177.0	194.4	271	1 3/8	1 3/8	1/2	1 3/8" 1 3/4-12 UN	1 3/8" 1 3/4-12 UN
BH0106XL-RXX	12 3/4	60	233.7	218.4	204.2	224.1	245.8	336	1 3/8	1 3/8	1/2	1 3/8" 1 3/4-12 UN	1 3/8" 1 3/4-12 UN
BH0129XL-RXX	12 3/4	72	283	264.1	246.9	271.3	297.3	400	2 1/8	1 3/8	1/2	2 1/8" 2 1/4-12 UN	1 3/8" 1 3/4-12 UN
BH0173XL-RXX	12 3/4	96	381.1	355.5	332.4	365.5	400.1	539	2 1/8	1 3/8	1/2	2 1/8" 2 1/4-12 UN	1 3/8" 1 3/4-12 UN
BH0156XL-RXX	14	72	333.5	321.1	300.2	319.8	361.3	442	1 5/8	1 5/8	1/2	1 5/8" 2 1/4-12 UN	1 5/8" 2 1/4-12 UN
BH0211XL-RXX	14	96	453.2	432.5	404.3	434.7	486.7	626	1 5/8	1 5/8	1/2	1 5/8" 2 1/4-12 UN	1 5/8" 2 1/4-12 UN
BH0170XL-RXX	16	60	375.2	349.5	326.7	359.8	393.3	566	2 1/8	2 1/8	1/2	2 1/8" 2 1/4-12 UN	2 1/8" 2 1/4-12 UN
BH0206XL-RXX	16	72	454.5	423.3	395.7	435.9	476.3	674	2 1/8	2 1/8	1/2	2 1/8" 2 1/4-12 UN	2 1/8" 2 1/4-12 UN
BH0278XL-RXX	16	96	613.1	570.8	533.7	588.0	642.4	917	2 1/8	2 1/8	1/2	2 1/8" 2 1/4-12 UN	2 1/8" 2 1/4-12 UN
BH0262XL-RXX	18	72	579.4	538.9	503.8	555.7	606.5	795	-	2 1/8	1/2		2 1/8" 2 1/4-12 UN
BH0325XL-RXX	20	72	694.1	667.9	624.4	666	751.6	857	-	2 1/8	1/2		2 1/8" 2 1/4-12 UN
BH0383XL-RXX	20	84	820.5	785.4	734.3	786.9	884	993	-	2 1/8	1/2		2 1/8" 2 1/4-12 UN
BH0440XL-RXX	20	96	946.9	903	844.2	908.2	1016.3	1198	-	2 1/8	1/2		2 1/8" 2 1/4-12 UN
BH0622XL-RXX*	24	96	1369.3	1277.5	1194.3	1313.3	1437.7	1370	-	-	3/4		
BH0786XL-RXX*	24	120	1730.2	1613.1	1508.1	1656.4	1815.5	1470	-	-	3/4		

Pumpdown capacities are 90% of receiver volume at 90° F
****Refers to "R" models: B(V/H)xxxxxx-Rxx with valves installed**

Model Number Explanation

Explanation of Model Number											
B	V	0	0	0	5	X	L	-	X	X	X
Model designation B = Bitzer receiver											
B	V	0	0	0	5	X	L	-	X	X	X
Model orientation V = Vertical, H = Horizontal											
B	V	0	0	0	5	X	L	-	X	X	X
Nominal capacity xxxx = Volume in liters (l)											
B	V	0	0	0	5	X	L	-	X	X	X
Bracket and feet X = no feet and No top brackets N = Welded feet H = Welded feet and top brackets (single compressor assembly)											
B	V	0	0	0	5	X	L	-	X	X	X
Version L = HFC Refrigerant (450 psi rating) K = R410a Refrigerant (600 psi rating)											
B	V	0	0	0	5	X	L	-	X	X	X
Connection types X = standard IDS connections R = Rotalock connections*											
B	V	0	0	0	5	X	L	-	X	X	X
Connection types X = standard IDS connections R = Rotalock connections*											
B	V	0	0	0	5	X	L	-	X	X	X
Custom X = no optionsZ = Consult Bitzer											
* Rotalock valves installed where possible on both inlet/outlet or just inlet for larger sizes											

**Please contact your local branch for more information and pricing*

RECEIVERS

BITZER

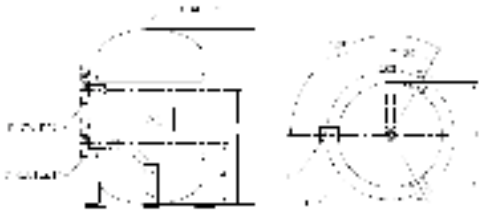

Vertical Liquid Receivers (Standard and with Rotolock)

Model No.	Vessel Dimensions		Pumpdown Capacities					Weight	Valve Conection Size (IDS)**		Safety NPT in.	Replacement rotolock valves	
	OD	Length	R134a lb	R407C lb	R404A lb	R507 lb	R22 lb		Inlet	Outlet		Inlet	Outlet
BV0007NL-RXX	6 5/8	15	15.0	14.1	13.2	14.4	15.9	39	1/2	1/2	3/8	1/2" 1-14 UNS	1/2" 1-14 UNS
BV0009NL-RXX	8 5/8	12	20.0	18.6	17.3	19.2	20.9	33	1/2	1/2	3/8	1/2" 1-14 UNS	1/2" 1-14 UNS
BV0013NL-RXX	8 5/8	16	27.5	25.7	24.1	26.4	29.0	43	1/2	1/2	3/8	1/2" 1-14 UNS	1/2" 1-14 UNS
BV0014NL-RXX	8 5/8	18	31.3	29.3	27.4	29.4	33.0	48	1/2	1/2	3/8	1/2" 1-14 UNS	1/2" 1-14 UNS
BV0020NL-RXX	8 5/8	24	43.2	40.1	37.5	41.4	45.2	62	5/8	5/8	3/8	1/2" 1-14 UNS	1/2" 1-14 UNS
BV0027NL-RXX	8 5/8	32	58.8	54.5	51.0	56.4	61.4	100	7/8	7/8	3/8	7/8" 1 1/4-12 UNF	7/8" 1 1/4-12 UNF
BV0021NL-RXX	10 3/4	18	48.2	44.1	41.2	46.2	49.6	88	5/8	5/8	1/2	1/2" 1-14 UNS	1/2" 1-14 UNS
BV0035NL-RXX	10 3/4	28	78.2	71.9	67.2	75.0	80.9	132	1 1/8	1 1/8	1/2	1 1/8" 1 1/4-12 UNF	1 1/8" 1 1/4-12 UNF
BV0049NL-RXX	10 3/4	38	107.6	99.7	93.2	103.2	112.2	191	1 1/8	1 1/8	1/2	1 1/8" 1 1/4-12 UNF	1 1/8" 1 1/4-12 UNF
BV0029NL-RXX	12 3/4	18	61.9	58.5	54.7	59.4	65.9	110	1 1/8	1 1/8	1/2	1 1/8" 1 1/4-12 UNF	1 1/8" 1 1/4-12 UNF
BV0032NL-RXX	12 3/4	20	70.0	66.1	61.8	67.2	74.4	121	1 1/8	1 1/8	1/2	1 1/8" 1 1/4-12 UNF	1 1/8" 1 1/4-12 UNF
BV0040NL-RXX	12 3/4	24	86.3	81.4	76.1	82.8	91.6	142	1 1/8	1 1/8	1/2	1 1/8" 1 1/4-12 UNF	1 1/8" 1 1/4-12 UNF
BV0062NL-RXX	12 3/4	36	135.7	127.1	118.8	130.2	143.0	207	1 1/8	1 1/8	1/2	1 1/8" 1 1/4-12 UNF	1 1/8" 1 1/4-12 UNF
BV0073NL-RXX	12 3/4	42	160.1	149.9	140.2	153.6	168.7	239	1 1/8	1 1/8	1/2	1 1/8" 1 1/4-12 UNF	1 1/8" 1 1/4-12 UNF
BV0084NL-RXX	12 3/4	48	184.5	172.8	161.5	168.7	194.4	281	1 3/8	1 3/8	1/2	1 1/8" 1 1/4-12 UNF	1 1/8" 1 1/4-12 UNF
BV0048NL-RXX	14	24	105.7	98.2	91.9	101.4	110.6	158	1 3/8	1 3/8	1/2	1 1/8" 1 1/4-12 UNF	1 1/8" 1 1/4-12 UNF
BV0098NL-RXX	14	46	210.1	200.4	187.3	201.5	225.5	330	1 3/8	1 3/8	1/2	1 1/8" 1 1/4-12 UNF	1 1/8" 1 1/4-12 UNF
BV0063NL-RXX	16	24	137.6	128.1	119.8	132.0	144.2	243	1 3/8	1 3/8	1/2	1 1/8" 1 1/4-12 UNF	1 1/8" 1 1/4-12 UNF
BV0134NL-RXX	16	48	295.8	275.7	257.7	283.7	310.2	459	1 5/8	1 5/8	1/2	1 3/8" 1 3/4-12 UN	1 3/8" 1 3/4-12 UN
BV0170NL-RXX	16	60	375.2	349.5	326.7	359.9	33.3	567	1 5/8	1 5/8	1/2	1 3/8" 1 3/4-12 UN	1 3/8" 1 3/4-12 UN
BV0079NL-RXX	18	24	125.7	161.3	150.8	120.6	181.5	279	1 5/8	1 5/8	1/2	1 3/8" 1 3/4-12 UN	1 3/8" 1 3/4-12 UN
BV0224NL-RXX	18	62	472.8	460.2	430.3	453.5	518.0	820	1 5/8	1 5/8	1/2	1 3/8" 1 3/4-12 UN	1 3/8" 1 3/4-12 UN

Pumpdown capacities are 90% of receiver volume at 90° F
****Refers to "R" models: B(V/H)xxxxxx-Rxx with valves installed**

ACCUMULATORS/ RECEIVERS 337-368

Model Number Explanation

Explanation of Model Number											
B	V	0	0	0	5	X	L	-	X	X	X
Model designation B = Bitzer receiver											
B	V	0	0	0	5	X	L	-	X	X	X
Model orientation V = Vertical, H = Horizontal											
B	V	0	0	0	5	X	L	-	X	X	X
Nominal capacity xxxx = Volume in liters (l)											
B	V	0	0	0	5	X	L	-	X	X	X
Bracket and feet X = no feet and No top brackets N = Welded feet H = Welded feet and top brackets (single compressor assembly)											
B	V	0	0	0	5	X	L	-	X	X	X
Version L = HFC Refrigerant (450 psi rating) K = R410a Refrigerant (600 psi rating)											
B	V	0	0	0	5	X	L	-	X	X	X
Connection types X = standard IDS connections R = Rotalock connections*											
B	V	0	0	0	5	X	L	-	X	X	X
Connection types X = standard IDS connections R = Rotalock connections*											
B	V	0	0	0	5	X	L	-	X	X	X
Custom X = no optionsZ = Consult Bitzer											
* Rotalock valves installed where possible on both inlet/outlet or just inlet for larger sizes											

EVAPORATORS

BITZER

Evaporators

Model No.	R22			Rl34a			Refrigerant connections (IDS)			Fluid Connections	Dimensions	
	Capacity	Nominal flow	Pressure drop (nominal)	Capacity	Nominal flow	Pressure drop (nominal)	Weight	Inlet	Outlet		Diameter	Length
	kBTU/h	gpm	psi	kBTU/h	gpm	psi	lbs	(in)	(in)	(in)	(in)	(in)
1 Circuit												
STEM030-1NTXXXX	368	73.4	5.8	294	58.7	3.8	356	1 1/8	2 5/8	3” MPT	6 5/8	82 1/4
STEM040-1NTXXXX	502	100.1	5.1	402	80.1	3.3	468	1 3/8	2 5/8	3” MPT	8 5/8	82 1/2
STEM050-1NTXXXX	632	125.9	5.0	505	100.7	3.1	493	1 3/8	3 1/8	4” FLANGE	8 5/8	82 1/4
STEM060-1NTXXXX	744	148.4	5.2	595	118.7	4.0	562	1 5/8	3 1/8	4” FLANGE	8 5/8	95 7/16
STEM075-1NTXXXX	904	179.7	5.3	723	143.8	3.2	596	2 1/8	3 1/8	5” FLANGE	8 5/8	95 11/16
STEM100-1NTXXXX	1187	236.9	4.9	950	189.5	2.9	816	2 1/8	3 5/8	5” FLANGE	10 3/4	96 1/2
STEM120-1NTXXXX	1455	290.1	4.5	1164	232.1	2.7	1275	2 1/8	3 5/8	6” FLANGE	12 3/4	96 1/16
2 Circuits												
STEM030-2NTXXXX	368	73.4	5.8	294	58.7	3.8	356	7/8	1 5/8	3” MPT	6 5/8	82 1/4
STEM040-2NTXXXX	502	100.1	5.1	402	80.1	3.3	468	1 1/8	2 1/8	3” MPT	8 5/8	82 1/2
STEM050-2NTXXXX	632	125.9	5.0	505	100.7	3.1	493	1 1/8	2 1/8	4” FLANGE	8 5/8	82 1/4
STEM060-2NTXXXX	744	148.4	5.2	595	118.7	4.0	562	1 1/8	2 5/8	4” FLANGE	8 5/8	95 7/16
STEM075-2NTXXXX	904	179.7	5.3	723	143.8	3.2	596	1 3/8	2 5/8	5” FLANGE	8 5/8	95 11/16
STEM100-2NTXXXX	1187	236.9	4.9	950	189.5	2.9	816	1 3/8	3 1/8	5” FLANGE	10 3/4	96 1/2
STEM120-2NTXXXX	1455	290.1	4.5	1164	232.1	2.7	1275	1 3/8	3 1/8	6” FLANGE	12 3/4	96 1/16
STEM150-2NTXXXX	1914	382.2	10.6	1531	305.7	6.2	1469	1 3/8	3 1/8	6” FLANGE	14	98 11/16
STEM175-2NTXXXX	2270	453.1	13.9	1816	362.4	8.2	1547	1 5/8	3 1/8	6” FLANGE	14	98 11/16
STEM200-2NTXXXX	2665	532	9.1	2132	425.6	5.4	1912	1 5/8	3 1/8	8” FLANGE	16	99 3/16
STEM250-2NTXXXX	3059	610.5	11.9	2447	488.4	7.0	1997	2 1/8	3 5/8	8” FLANGE	16	99 3/16
STEM275-2NTXXXX	3420	684.2	9.8	2736	547.4	7.3	2343	2 1/8	4 1/8	8” FLANGE	18	98 15/16
STEM300-2NTXXXX	3882	774.9	9.0	3106	619.9	6.0	2770	2 1/8	4 1/8	8” FLANGE	20	98 13/16

Standard Conditions: Inlet Water Temp: 85°F, Outlet Water Temp: 95°F, Subcooling: 3°F, Entering Refrigerant Temp: 125°F, Condensing Temp: 105°F, Fouling factor: 0.000244 [hr* ft:2*° F/Btu]

Model Number Explanation

S	T	E	M	0	3	0	-	1	N	T	X	X	X	X
Model Designation														
STE = shell-and-tube evaporator														
S	T	E	**M**	0	3	0	-	1	N	T	X	X	X	X
Pressure														
M = low / medium pressure H = high pressure														
S	T	E	M	**0 3 0**			-	1	N	T	X	X	X	X
Nominal capacity														
S	T	E	M	0	3	0	-	**1**	N	T	X	X	X	X
Number of Circuits														
1 = single														
2 = two														
3 = three														
4 = four														
S	T	E	M	0	3	0	-	1	**N**	T	X	X	X	X
Bracket and Feet Configuration														
N = feet on bottom														
H = feet on bottom, brackets on top for stacking evaporators														
T = brackets on top for stacking evaporators														
S	T	E	M	0	3	0	-	1	N	**T**	X	X	X	X
Water Connection Location														
T = top L = left R = right														
S	T	E	M	0	3	0	-	1	N	T	**X**	X	X	X
Water Connection Type														
X = standard connections														
J = flexible joint connections 1 .. 9 = flange patterns														
S	T	E	M	0	3	0	-	1	N	T	X	**X**	X	X
Refrigerant Connection Type														
X = standard configuration R = rotalock connection														
C = flange and copper fitting S = flange and steel fitting														
S	T	E	M	0	3	0	-	1	N	T	X	X	**X X**	
Design Variables														
XX = standard configuration TX = 3/4 in. insulation														
RX = 1 1/2 in. insulation UX = UV rated insulation														



Please contact your local branch for more information and pricing

CONDENSERS

BITZER

Shell and Tube Condensers

Model No.	R22			RI34a					
	Total Heat of Rejection	Water Pressure Drop	Water Flow Rate	Total Heat of Rejection	Water Pressure Drop	Water Flow Rate	Pumpdown Capacity	Water Flow	Water Flow
	Btu/h	psi	gpm	Btu/h	psi	gpm	(R22) lbs	Minimum gpm	Maximum gpm
Standard Models									
STC005XS-XXX	77,663	1.9	16.0	79,094	1.9	16.0	18.0	6.0	30.0
STC007XS-XXX	108,361	3.8	22.0	112,875	4.1	23.0	22.7	6.0	30.0
STC010XS-XXX	136,912	4.0	28.0	141,802	4.2	29.0	20.9	7.5	37.5
STC015XS-XXX	223,258	4.0	45.0	232,340	4.3	47.0	37.8	12.0	60.0
STC020XS-XXX	297,677	1.7	60.0	310,307	1.9	63.0	64.6	21.0	105.0
STC025XS-XXX	433,188	2.1	87.0	446,516	2.3	90.0	58.7	27.0	135.0
STC030XS-XXX	506,051	2.0	102.0	524,000	2.1	106.0	98.9	33.0	165.0
STC040XS-XXX	607,459	3.8	122.0	630,084	4.1	127.0	128.0	30.0	150.0
STC050XS-XXX	831,522	4.2	167.0	858,303	4.5	173.0	117.5	39.0	195.0
STC060XS-XXX	911,189	3.8	183.0	942,645	4.1	190.0	178.0	45.0	225.0
STC070XS-XXX	1,199,982	4.5	241.0	1,235,361	4.8	249.0	168.1	54.0	270.0
STC080XS-XXX	1,304,545	4.3	262.0	1,339,547	4.6	249.0	168.1	60.0	300.0
STC100XS-XXX	1,682,962	2.0	338.0	1,726,529	2.1	348.0	278.0	102.0	510.0
STC125XS-XXX	2,235,651	2.1	449.0	2,292,116	2.2	462.0	250.7	132.0	660.0
STC150NS-XXX	2,668,840	2.1	536.0	2,738,631	2.2	552.0	307.8	156.0	780.0
STC200NS-XXX	3,639,780	2.1	731.0	3,730,888	2.2	752.0	385.1	210.0	1050.0
STC250NS-XXX	4,302,011	2.0	864.0	4,420,508	2.1	891.0	496.2	258.0	1290.0
Marine Models									
STC003XB-XXX	39,118	2.4	8.0	42,236	3.0	9.0	12.8	3.5	17.3
STC005XB-XXX	57,174	3.0	12.0	58,248	3.0	12.0	11.1	4.6	23.1
STC007XB-XXX	98,153	1.5	20.0	102,309	1.7	21.0	19.2	9.2	46.2
STC010XB-XXX	127,133	2.7	26.0	132,023	2.9	27.0	23.3	9.2	46.2
STC015XB-XXX	203,412	2.5	41.0	211,797	2.7	43.0	41.9	15.4	77.0
STC020XB-XXX	325,083	1.5	66.0	336,151	1.6	68.0	73.9	27.7	138.5
STC025XB-XXX	386,980	1.4	78.0	400,416	1.5	81.0	67.5	33.8	169.3
STC030XB-XXX	435,020	2.4	88.0	449,850	2.6	91.0	84.9	30.8	153.9
STC035XB-XXX	494,340	1.5	100.0	511,013	1.5	101.2	114.0	43.1	215.5
STC040XB-XXX	533,887	LS	108.0	550,703	1.5	111.0	110.5	46.1	230.8
STC045XB-XXX	625,123	2.5	126.0	644,967	2.7	130.0	137.3	43.1	215.5
STC050XB-XXX	664,813	2.5	134.0	689,619	2.6	139.0	133.2	46.1	230.8
STC065XB-XXX	873,187	2.4	176.0	902,955	2.6	182.0	194.3	61.5	308.0
STC075XB-XXX	982,335	2.5	198.0	1,012,103	2.6	204.0	186.1	67.7	338.5
STC100XB-XXX	1,637,225	1.4	330.0	1,686,838	1.5	340.0	314.1	135.4	677.0
STC120XB-XXX	1,805,909	1.5	364.0	1,860,483	1.5	375.0	300.1	147.7	738.5

Standard Conditions: Inlet Water Temp: 85°F, Outlet Water Temp: 95°F, Subcooling: 3°F, Entering Refrigerant Temp: 125°F, Condensing Temp: 105°F, Fouling factor: 0.000244 [hr* ft:2*° F/Btu]

Model Number Explanation

S	T	C	0	0	5	X	S	-	X	X	X

Model Designatiom

STC= Shell ant Tube Condenser

S	T	C	0	0	5	X	S	-	X	X	X

Nominal Capacity

S	T	C	0	0	5	X	S	-	X	X	X

Bracket and Feet Configuration

X = No Brackets

N = Bottom Brackets

S	T	C	0	0	5	X	S	-	X	X	X

Version

S = Standard Version

B = Marine Version

S	T	C	0	0	5	X	S	-	X	X	X

Connection Type

X = Standard Connections

R = Rotolock Connection

S	T	C	0	0	5	X	S	-	X	X	X

Design Variables

XX = Standard Configuration

GX = With SightGlass



**Please contact your local branch for more information and pricing*

CONDENSERS

BITZER

Shell and Tube Condensers (cont'd)

Model No.	Refrigerant connections					
	Outlet	Inlet	Safety Connection	Fluid Connection	Dimensions in Inches	
	IDS (in)	IDS (in)	NPT (in)	NPT (in)	Diameter	Length
Standard Models						
STC005XS-XXX	5/8	1 1/8	1/2	1	6 5/8	27 3/8
STC007XS-XXX	7/8	1 3/8	1/2	1 1/4	6 5/8	33 3/8
STC010XS-XXX	7/8	1 3/8	1/2	1 1/4	6 5/8	33 3/8
STC015XS-XXX	1 1/8	1 5/8	1/2	2	8 5/8	34 3/8
STC020XS-XXX	1 1/8	1 5/8	1/2	2	8 5/8	52 3/8
STC025XS-XXX	1 3/8	2 1/8	1/2	2	8 5/8	52 3/8
STC030XS-XXX	1 3/8	2 1/8	1/2	2 1/2	10 3/4	52 7/8
STC040XS-XXX	1 3/8	2 1/8	1/2	3	10 3/4	64 7/8
STC050XS-XXX	1 5/8	2 5/8	1/2	3	10 3/4	64 7/8
STC060XS-XXX	1 5/8	2 5/8	1/2	4	12 3/4	67 7/8
STC070XS-XXX	2 1/8	3 1/8	1/2	4	12 3/4	67 7/8
STC080XS-XXX	2 1/8	3 1/8	1/2	4	12 3/4	67 7/8
STC100XS-XXX	2 1/8	3 1/8	3/4	5	12 3/4	103 5/8
STC125XS-XXX	2 1/8	3 1/8	3/4	5	12 3/4	103 5/8
STC150NS-XXX	2 5/8	3 5/8	3/4	6	14	113 1/8
STC200NS-XXX	3 1/8	4 1/8	3/4	8	16	113 1/8
STC250NS-XXX	3 1/8	4 1/8	3/4	8	18	116
Marine Models						
STC003XB-XXX	5/8	7/8	3/8	3/4	6 5/8	21 3/8
STC005XB-XXX	5/8	1 1/8	3/8	3/4	6 5/8	21 3/8
STC007XB-XXX	7/8	1 3/8	3/8	1 1/4	6 5/8	33 5/8
STC010XB-XXX	7/8	1 3/8	3/8	1 1/4	6 5/8	39 5/8
STC015XB-XXX	1 1/8	1 5/8	1/2	2	8 5/8	39 7/8
STC020XB-XXX	1 1/8	2 1/8	1/2	2	8 5/8	63 7/8
STC025XB-XXX	1 3/8	2 1/8	1/2	2	8 5/8	64 3/4
STC030XB-XXX	1 3/8	2 5/8	1/2	2 1/2	8 5/8	76 3/8
STC035XB-XXX	1 3/8	2 5/8	1/2	2 1/2	10 3/4	64 5/8
STC040XB-XXX	1 5/8	2 5/8	1/2	2 1/2	10 3/4	65 3/8
STC045XB-XXX	1 5/8	2 5/8	1/2	2 1/2	10 3/4	77 5/8
STC050XB-XXX	1 5/8	2 5/8	1/2	2 1/2	10 3/4	77 3/4
STC065XB-XXX	2 1/8	3 1/8	1/2	4	12 3/4	79 7/8
STC075XB-XXX	2 1/8	3 1/8	1/2	4	12 3/4	79 7/8
STC100XB-XXX	2 1/8	3 1/8	1/2	5	12 3/4	131 7/8
STC120XB-XXX	2 1/8	3 5/8	1/2	5	12 3/4	131 7/8

Standard Conditions: Inlet Water Temp: 85°F, Outlet Water Temp: 95°F, Subcooling: 3°F, Entering Refrigerant Temp: 125°F, Condensing Temp: 105°F, Fouling factor: 0.000244 [hr* ft:2*° F/Btu]

Model Number Explanation

S	T	C	0	0	5	X	S	-	X	X	X

Model Designation

STC= Shell ant Tube Condenser

S	T	C	0	0	5	X	S	-	X	X	X

Nominal Capacity

S	T	C	0	0	5	X	S	-	X	X	X

Bracket and Feet Configuration

X = No Brackets

N = Bottom Brackets

S	T	C	0	0	5	X	S	-	X	X	X

Version

S = Standard Version

B = Marine Version

S	T	C	0	0	5	X	S	-	X	X	X

Connection Type

X = Standard Connections

R = Rotolock Connection

S	T	C	0	0	5	X	S	-	X	X	X

Design Variables

XX = Standard Configuration

GX = With SightGlass



**Please contact your local branch for more information and pricing*

TWO-STAGE OIL SEPARATORS

TEMPRITE

Accessible Coalescent Oil Separators

Features:

- Coalescent filter-separator, filters down to 0.3 microns
- Contains replaceable separator-filter for expanded usage
- 99% separating efficiency regardless of oil velocity
- Independently tested for high efficiency and durability
- OEM approved
- Enables clean-up at the separator when retrofitting
- Maximum working pressure 450 PSIG
- Includes one high-efficiency oil separator filter
- Capacity ratings listed below are nominal; capacity in tons at listed evaporator temperature

924, 925 Coalescent Oil Separator: Accessible
924R, 925R Coalescent Oil Separator/Reservoir: Accessible

Part #	Maximum Working Pressure	Oil Connector Size	Diameter	Dimensions			Oil Charge Amount	LIST
				A	B	C		
924	650 PSIG	1/4″ SAE	4″	1-1/8″ ODS	9-3/8″	21-5/8″	16 oz	$1,479.00
925	650 PSIG	1/4″ SAE	4″	1-3/8″ ODS	9-3/8″	21-5/8″	16 oz	$1,475.00

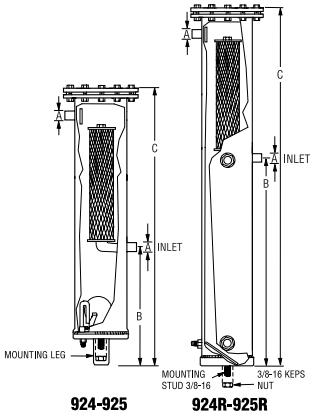

924-925 924R-925R

928 Coalescent Oil Separator: Accessible
928R Coalescent Oil Separator/Reservoir: Accessible

Part #	Maximum Working Pressure	Oil Connector Size	Diameter	Dimensions				Oil Charge Amount	LIST
				A	B	C	D		
928	650 PSIG	3/8″ SAE	8-5/8″	2-5/8″ ODS	33-5/8″	40-1/4"	12"	34oz	$6,516.00
928R	650 PSIG	3/8″ SAE	8-5/8″	2-5/8″ ODS	32-5/8″	39″	11-1/2"	2.0 gal	$6,653.00

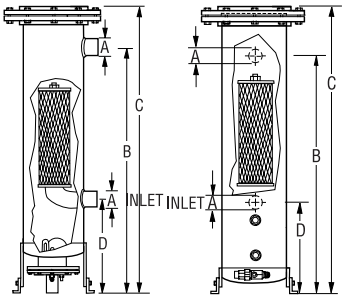

928 928R

Coalescing Standard/Clean-Up® Filters

Standard Filter Kit Part #	Clean-Up® Filter Kit Part #	Model	A Norminal	B Norminal	Standard LIST	Clean-Up LIST
62037000	62047000	924-925, 924R-925R	2″	9"	$278.60	$370.00
62028000	62030000	926-927, 926R-927R	3-1/2″	14″	$425.00	$584.00
62051000	62092802	928, 928R	5-1/8″	16″	$498.00	$1,018.00
62085000	62086000	930, 930R	8-1/2″	16″	$941.00	$1,680.00

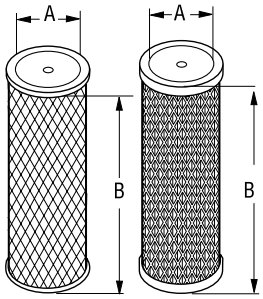

Standard Filter Kit Clean-Up® Filter Kit

HELICAL OIL SEPARATORS
HENRY TECHNOLOGIES

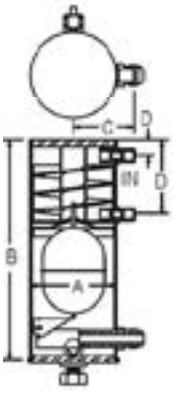

FIG. 1

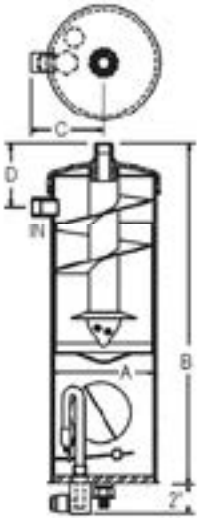

FIG. 2

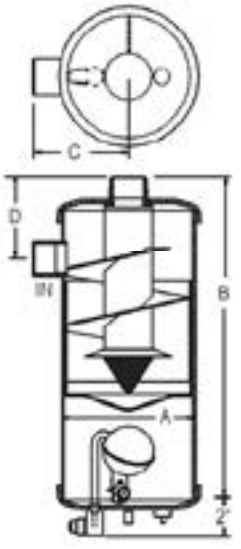

FIG. 3

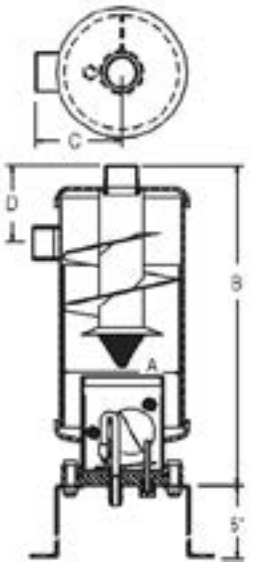

FIG. 4

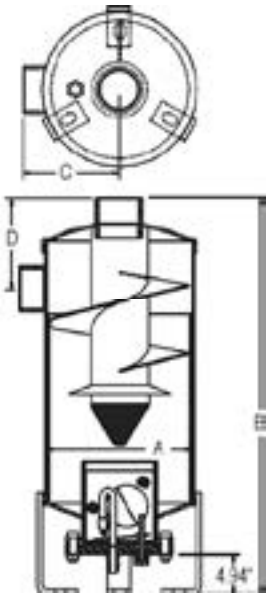

FIG. 5

Part #	Fig. No.	Size Conn. ODS	Dimensions in Inches					Capacity in Tons of Ref. at Evap. Temp.						Nom. DCFM	Pre-Charge Oil (oz)	LIST
			A	B	C	D		R-134a		R-22		R-404a/R-507				
								-40°F	+40°F	-40°F	+40°F	-40°F	+40°F			
S-5180	1	1/4"	2.5	6.38	1.75	0.44	2.12	0.40	0.50	0.55	0.60	0.50	0.60	0.5	14	$565.00
S-5181	1	3/8"	2.5	7.5	1.75	0.5	3.25	0.90	1.00	1.20	1.40	1.00	1.20	1.1	14	$571.00
S-5182	2	1/2"	4	13	2.75	2.44		1.30	1.50	1.80	2.00	1.50	1.90	1.7	14	$599.00
S-5185	2	5/8"	4	15	2.75	2.5		2.40	2.90	3.60	4.00	3.00	3.70	3.4	14	$664.00
S-5187	2	7/8"	4	17	3	2.94		4.70	5.70	6.80	7.60	5.70	7.00	6.5	14	$716.00
S-5188	2	1 1/8"	4	19	3	3.06		8.00	9.50	11.40	12.70	9.30	11.50	10.7	14	$887.00
S-5190	3	1 3/8"	6	15	4.25	3.69		11.60	13.90	16.40	18.40	13.60	16.40	15.5	40	$917.00
S-5192	3	1 5/8"	6	17	4.25	3.95		16.40	19.10	22.90	25.60	18.60	22.90	21.4	40	$1,013.00
S-5194	3	2 1/8"	6	17	4.38	4.19		24.90	29.40	35.40	39.10	28.60	35.40	33.0	40	$2,430.00
S-5290	4	1 3/8"	6	15	4.25	3.69		11.60	13.90	16.40	18.40	13.60	16.40	15.5	25	$2,678.00
S-5292	4	1 5/8"	6	17	4.25	3.95		16.40	19.10	22.90	25.60	18.60	22.90	21.4	25	$1,607.00
S-5294	4	2 1/8"	6	17	4.38	4.19		24.90	29.40	35.40	39.10	28.60	35.40	33.0	25	$1,680.00
S-5202	5	2 1/8"	8	24	5.38	5.06		29.40	35.00	41.80	46.60	34.30	42.10	39.2	25	$1,728.00
S-5203	5	2 5/8"	10	27	6.5	5.63		48.60	58.10	70.10	78.10	58.10	71.60	66.6	25	-
S-5204	5	3 1/8"	12	30	7.75	6.45		71.60	85.10	102.60	114.60	85.10	105.10	97.6	25	-

DCFM & Tonnage Ratings revised for optimal oil separation and minimal pressure drop.

Standard 3/8" flare oil return connection & 1/8" FPT oil drain; 3/8" O.D.S. oil return connection available by ordering an "X" suffix (i.e. S-5292X). All the capacities shown are based on 105°F condensing.

c UL us LISTED

VENTILATION SYSTEMS

NU-AIR

ES and Windsor Series HRVs

ES Series





Decora Controls



Tandom Hoods



Lumina Controls



NU Series

Built for Quick, Easy Installation

• Aluminum cabinet is 30-60% lighter than competitive models.
• Removable terminal blocks make wiring simple and done safely
from the floor.
• Independently adjustable motors means no mechanical dampers
required, saved energy and reduced fan noise.
• Dual door construction several models allows maximum versatility, minimum SKUs and minimum effort when routing ducts.
• 12 VDC or 24 VAC provide maximum design flexibility.
• Easily accessible components make service quick and easy.

Reliable Performance and Peace of Mind

• NO DRAINS REQUIRED for ERV models
• Intelligent defrost adjusts to outdoor temperature and saves energy.
• Quiet, efficient motors.
• Pressure-neutral 5th port defrost option ensures dependable operation in extreme climates and DOES NOT recirculate dirty exhaust air. The perfect solution for wood stove heat distribution

Part Number	Description	List
ES095E-NUA	89 CFM Flat-Format ERV	$1,877.00
ES115E	125 CFM Flat-Format ERV	
ES100H-NUA	118 CFM Top-Port HRV	$2,355.00
NU145H-NUA	123 CFM Side-Port HRV	$2,245.00
ES160H-NUA	158 CFM Top-Port HRV	$2,466.00
ES160E-NUA	140 CFM Top-Port ERV	$2,558.00
SE182E	201 CFM Top/Side-Port ERV	
NAV-561-NUA	LUMINA WALL CONTROL	$220.80
NAV-460-NUA	20-40-60 MINUTE TIMER	$110.40
THA5-NUA	Tandem Hood Kit	$200.20

Please contact your local branch for pricing.

VENTILATION SYSTEMS

NU-AIR

Commercial HRVs and ERVs

LC Series		Nu-Air Advantage	Air Flow CFM (L/S)				Size LxHxD	Weight	Core	Duct Size	Defrost Type	Effectiveness Sensible
			0	0.2	0.3	0.4	in (mm)	lb (kg)		in (mm)		
NU305	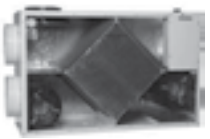	- Lightweight aluminum cabinet - Two FCDI direct-drive blowers - 2-speed PSC motors - Adjustable low and high speed - Removable wire blocks: 12VDC, 24 VAC - Door switch, power cord	**320** (151)	**292** (137)	**253** (119)	**231** (109)	**36 x 23 x 17** (914 x 584 x 432)	**50** (22.7)	Polypropylene	**8** (203)	FSD or Damper Circulation	66-70%
NU500		- Lightweight aluminum cabinet - Two FCDI direct-drive blowers - 1275 RPM, 2-speed PSC motors - Adjustable low and high speed - Removable wire blocks: 12 VDC, 24 VAC	**554** (261)	**495** (233)	**480** (226)	**460** (216)	**36 x 23 x 17** (914 x 584 x 432)	**55** (25)	Polypropylene	**10 x 6** (254 x 150)	FSD or Damper Circulation	66-70%
NU600	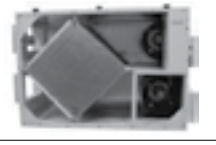	- Lightweight aluminum cabinet - Two FCDI direct-drive blowers - 1275 RPM, 2-speed PSC motors - Adjustable low and high speed - Removable wire blocks: 12 VDC, 24 VAC	**640** (301)	**590** (277)	**565** (266)	**535** (252)	**42 x 30 x 23** (1067 x 762 x 584)	**170** (77.3)	Polypropylene	**14 x 8** (356 x 203)	FSD or Damper Circulation	63-65%
NU800		- Galvanized steel cabinet, standard - Two DWDI direct-drive blowers - 1075 RPM, 2-speed PSC motors, 1/3 HP - Backdraft damper options - Removable wire blocks: 12 VDC, 24 VAC	**810** (381)	**750** (353)	**700** (329)	**675** (319)	**54 x 30 x 23** (1372 x 762 x 584)	**245** (111)	Polypropylene	**14 x 8** (356 x 203)	FSD or Damper Circulation	63-65%
NU1200	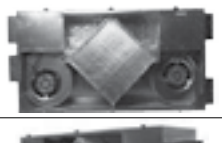	- Galvanized steel cabinet, standard - Two DWDI direct-drive blowers - 1625 RPM, 2-speed PSC motors, 1/2 HP - Backdraft damper options - Removable wire blocks: 12 VDC, 24 VAC	**1160** (545)	**1120** (527)	**1090** (513)	**1075** (505)	**54 x 30 x 23** (1372 x 762 x 584)	**245** (111)	Polypropylene	**14 x 8** (356 x 203)	FSD or Damper Circulation	63-65%
NU1600	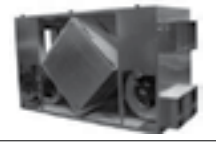	- Galvanized steel cabinet, standard - Two DWDI direct-drive blowers - 1075 RPM, 2-speed PSC motors, 1 HP - Backdraft damper options - Removable wire blocks: 12 VDC, 24 VAC	**1750** (823)	**1620** (761)	**1605** (754)	**1530** (719)	**64 x 38 x 30** (1626 x 965 x 762)	**340** (155)	Polypropylene	**20 x 10** (508 x 254)	FSD or Damper Circulation	59-62%
*NU2200	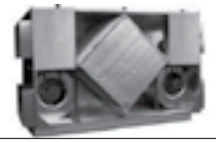	- Galvanized steel cabinet, standard - Two DWDI belt-drive fans - 1-speed, PSC motors, 1.5 HP - Split motor pulley - 24 VAC dry contacts	**2867** (1348)	**2567** (1207)	**2510** (1180)	**2475** (1164)	**64 x 38 x 30** (1626 x 965 x 762)	**400** (182)	Polypropylene	**24 x 12** (610 x 305)	FSD	59-62%

Standard Features (units up to NU1600)

- Forward curve DWDI blowers
- Permanently sealed bearings
- Temperature activated fan shut down defrost
- 1" pleated filters 30-40% ASHRAE dust spot efficiency
- Remote or automatic controls and sensors
- Condensate drain and anti-vibration kits included
- Large surface area heat recovery cores

Controls

- 24 V dry contacts available for 2-speed control, time-clocks, occupancy and CO sensors also available.
- For units up to NU1600, ES Series controls are available.



Please contact your local branch for pricing.

FANTECH

FIT 120H

Heat Recovery Ventilator



Apparent Recovery Efficiency

76% @ 32°F (0°C), 86 cfm (41 l/s)
81% @ -13°F (-25°C), 65 cfm (31 l/s)

Sensible Recovery Efficiency

64% @ 32°F (0°C), 86 cfm (41 l/s)
56% @ -13°F (-25°C), 65 cfm (31 l/s)

Maximum Continuous Ventilation

116 cfm (55 l/s)

Physical parameters

- Aluminum heat recovery core
- Supply fan modulation frost prevention
- Side port location
- Oval 5" (125 mm) ducts
- Electrical consumption: more than 1 cfm/W
- Net weight: 42 lbs (19 kg)
- Length - Width - Height:
  31" - 21" - 10 1/4" (785 mm - 531 mm - 260 mm)

Installation

- Drain needed
- Ceiling bracket included
- Balancing dampers included

Application

- Condo
- Apartments
- Single family homes

Wall Control Compatibility

ECO-TOUCH®, EDF7, EDF1, RTS2, RTS5, MDEH1

Part #	LIST
FIT120H	$1,984.00

FIT 120E

Energy Recovery Ventilator



Apparent Recovery Efficiency

80% @ 32°F (0°C), 85 cfm (40 l/s)
80% @ 5°F (-15°C), 66 cfm (31 l/s)

Sensible Recovery Efficiency

64% @ 32°F (0°C), 85 cfm (40 l/s)
56% @ 5°F (-15°C), 66 cfm (31 l/s)

Maximum Continuous Ventilation

110 cfm (52 l/s)

Physical parameters

- Polymer membrane energy recovery core
- Supply fan modulation frost prevention
- Side port location
- Oval 5" (125 mm) ducts
- Electrical consumption: more than 1 cfm/W
- Net weight: 36 lbs (16 kg)
- Length - Width - Height:
  31 1/4" - 19" - 8 3/4" (870 mm - 485 mm - 222 mm)

Installation

- No drain needed
- Ceiling bracket included
- Balancing dampers included

Application

- Condo
- Apartments
- Single family homes

Wall Control Compatibility

ECO-TOUCH®, EDF7, EDF1, RTS2, RTS5, MDEH1

***No drain required for FIT 120E (only)**

Part #	LIST
FIT120E	$2,567.00

FANTECH

Heat Recovery Ventilators



SHR



VHR

SHR Series / VHR Series

SHR150 substitutes to ATMO150H.

SHR200 (still in stock) substitutes to ATMO200H

FEATURES:

- Simple Yet Sophisticated Design Makes These Units the Most Reliable HRVs on the Market
- Aluminum Cores
- EBM Motors with Backward Incline Impellers
- Steep Fan Curves for Superior Airflow Performance minimize the need to balance
- Insulated with 1" (25mm) Foil-Faced High Density Polystyrene Foam

OPTIONAL CONTROLS

- RTS2 – FANTECH PUSH BUTTON TIMER 20 MIN. W/ LED FOR SHR & VHR
- RTS3 – FANTECH 20/40/60 MIN. TIMER PUSH BUTTON F/ SHR/VHR SERIES
- EDF1 – FANTECH HRV SWITCH / TIMER ON/ OFF LOW/HIGH SPEED & 20MIN. OR 40MIN. OFF CYCLE TIMER
- EDF5 – FANTECH INTELITEK CONTROL 2-WIRE
- MDEH1 – FANTECH LOW V. DEHUMIDISTAT F/ SHR/VHR SREIES HRV'S
- MDEH2 – FANTECH 4-WIRE DEHUMIDISTAT LOW V. W/ ON/OFF
- VT20A – MARTECH PUSH BUTTON TIMER & SPEED CONTROL AUX. SWITCH
- VT20M – MARTECH PUSH BUTTON TIMER & SPEED CONTROL MASTER SWITCH

MODEL #	DESCRIPTION	BOX SIZE LxWxH	WARRANTY (YEARS)	LIST

FLEX 100H HEAT RECOVERY VENTILATORS

FLEX 100H	HRV, 67cfm @ .3 "WG, 56 cfm	24x16x20	*	$1,994.00

- Up to 100 CFM
- Lightweight: only 39lbs (17.7kg) including core
- Top port design fits in tight spaces
- Includes EZ-Mount wall bracket
- Aluminum heat recovery core
- Multiple speed operation
- Internal recirculation defrost
- Duct Connections: 5"
- OAL: 22.4"x15"x17.9"

SH "04" SERIES HEAT RECOVERY VENTILATORS (HRV with fan shut down defrost)

Compact, Low Maintenance, Exclusive Electronic Control Board that accepts Fantech Low Voltage Controls.

SHR200-FAN	Horizontal Heat Recovery Ventilator with Side Port Connections and 3 Speed Ventilation Contro	12 X 12 X 15	*	$3,061.00

SH 04 Series (Fan shut down design) provide exhaust only ventilation during defrost sequence.

SH "05" SERIES HEAT RECOVERY VENTILATORS (HRV with recirculation design)

Compact, Low Maintenance, Exclusive Electronic Control Board that accepts Fantech Low Voltage Controls and a Recirculation Defrost Strategy.

SHR200-FAN	Horizontal Heat Recovery Ventilator with Side Port Connections and 3 Speed Ventilation Contro	12 X 12 X 15	*	$3,061.00

SH "05" Recirculation design models (Identified with an R at the end of the model number) provide a unique damper defrost sequence with recirculation.

*Fantech Warranty:
Motors: 7 years (limited), Aluminum Core: Lifetime (limited) and Electrical Components: 5 years (limited)

FANTECH

HEPA Filtration Systems

Unit Size	DM3000P – 20” x 16” x 10.5”; (2) 5” x 10” ports CM3000 – 20” x 16” x 10.5”; (2) 8” diameter ports
Motor	Powerful German manufactured EBM external rotor motorized impeller with permanently lubricated ball bearings for long life and vibration free operation. Delivers 240 cfm air flow.
Electrical	Prewired with 5’ cord and 3-prong plug. 115 volts; 1.0 amps
Filters	Easy to replace. No tools needed. Pre-Filter captures larger particles. Replace every three months. Carbon Filter absorbs odors and gases. Replace every three months HEPA filter - 99.97% effective down to 0.3 microns. Specially designed to be the least expensive HEPA filter to replace. Lasts 2 to 5 years depending on proper maintenance of the pre-filters.*

**Homes with a high level of pollutants (such as a heavy smoker) will need to change the filter more often.*

HIGH EFFICIENT WHOLE-HOUSE HEPA FILTRATION SYSTEMS

Collects 99.97% of particles down to 0.3 microns.

Easily connects to furnace/air handler or may be independently ducted.

MODEL #	DESCRIPTION	BOX SIZE LxWxH	WARRANTY (YEARS)	LIST
DM 3000P	Duct mounted HEPA unit easily attaches to furnace plenum, 240 cfm with built-in pressure switch for automatic activation	23x17x16	***	$1,326.00
CM 3000	Collar mounted HEPA kit included 2 pieces of 8" flex, 4 collars and hanging chains, 240 cfm	23x17x16	***	$1,142.00

*** Warranty on the HEPA Series: Motor: 7 years (limited), Electrical Components: 5 years (limited) (filters not included)


DM3000P


CM3000

AIR CONDITIONING 369-553

Inline Centrifugal Fans

Easy to install | Loaded with features

- Prewired and supplied with a mounting bracket for easy installation
- Available singularly with bracket or in a variety of kits for specific applications. Each kit includes the appropriate fan and accessories
- UL Listed; CSA Certified
- Approved for residential and commercial applications and for wet locations
- Suitable for airstream temperatures up to 140°F
- Easy connection using external wiring box with waterproof gasket
- 122-649 CFM
- 4” to 10” duct diameters
- 100% speed controllable
- Five-year factory warranty



FR Series Performance Data

Fan Model	Energy Star	RPM	Volts	Rated Watts	Wattage Range	Max. Amps	Static Pressure in Inches W.G							Max. Ps	Duct Dia.	LIST
							0”	.2”	.4”	.6”	.8”	1.0”	1.5”			
FR 100	√	2900	115	19	13 – 19	0.18	122	100	78	55	15	—	—	0.87”	4”	$461.00
FR 110	—	2900	115	80	62 – 80	0.72	167	150	133	113	88	63	4	1.60”	4”	-
FR 125	√	2950	115	18	15 – 18	0.18	148	120	88	47	—	—	—	0.79”	5”	$525.00
FR 140	√	2850	115	61	47 – 62	0.53	214	190	162	132	99	46	—	1.15”	6”	$532.00
FR 150	√	2750	120	71	54 – 72	0.67	263	230	198	167	136	106	17	1.58”	6”	$540.00
FR 160	—	2750	115	129	103 – 130	1.14	289	260	233	206	179	154	89	2.32”	6”	$565.00
FR 200	√	2750	115	122	106 – 128	1.11	408	360	308	259	213	173	72	2.14”	8”	-
FR 225	√	3100	115	137	111 – 152	1.35	429	400	366	332	297	260	168	2.48”	8”	-
FR 250	—	2850	115	241	146 – 248	2.40	649	600	553	506	454	403	294	2.58”	10”	-
FG8XL	—	3031	120	137		1.32									8”	-
FG10XL	—	3140	120	190		2.24									10”	-
FG12XL	—	2750	120	286		2.54									12”	-

FR Series performance is shown with ducted outlet. Per HVI’s Certified Ratings Program, charted air flow performance has been derated by a factor based on actual test results and the certified rate at .2 inches WG.

CONTROLS AND SWITCHES

FANTECH ACCESSORIES

Timers



FD60EM
Electronic push button timer. Select from 10, 20, 30 and 60 minute timed operation of fan. Includes Decora style white switch plate and screws. Fits standard single gang box. Ideal for multiple switching locations. Switch suitable for 115 volt supply. 20 amp rating.

LIST
-



RTS2
15-minute timer with LED light for use with Fantech Heat Recovery and Energy Recovery Ventilators. Works as an override switch to turn HRV or ERV on high speed for 15 minutes. Up to five timers can be used. Install in bathrooms, kitchen or laundry – where ever easy-access wall control is needed.

LIST
$73.60



RTS3
Intermittent Timer. The ideal control for those areas of the home where excess moisture, steam and odors are created. Press the button once to energize your HRV/ERV system to high speed for 20 Minutes (Green). Press the button twice and the unit will run for 40 Minutes at high speed (Yellow). Press the button three times and the unit kicks to high speed for 60 minutes (Red). When time expires the unit will return to its original setting.

LIST
$129.80

Variable Speed Controllers



KBWC-115K
The KBWC-115K is a Distributor packaged Solid State AC Motor Speed Fan Control. It is designed for mounting in a 2" X 4" electrical wall box. It operates from 115 VAC, 50/60 Hz and has a maximum rating of 15.0 Amps @ 25°C.

Model #	Volts	Amps	LIST
KBWC-115K-BAL	115	15	$184.90

Humidistat Controller



FH 20
Wall mounted dehumidistat. Adjustable between 20% and 80% relative humidity. Switch suitable for up to 115 volt supply. 7.5 amp rating. White.

LIST
$116.20

Dehumidistats



MDEH 1
2-wire low voltage dehumidistat control with rotary dial. Just turn the dial to set the humidity level. Multiple units can be used with Fantech HRV's. Install in bath-rooms, kitchen or laundry for easy access.

LIST
$91.00

FILTER RACK

Metal Filter Rack



- All filter racks come complete with access doors
- Standard sizes fits most applications & equipment
- Preassembled – saving time & labour
- Filters are sold separately

Part #	Alt #	Description	LIST
FR16251D	599629	16"x25"x1" c/w door, 3" wide total	$107.50
FR16252D	599614	16"x25"x2" c/w door, 4" wide total	$114.20
FR16254D	599637	16"x25"x4" c/w door, 7" wide total	$168.00
FR20201D	599628	20"x20"x1" c/w door, 3" wide total	$107.50
FR20202D	599613	20"x20"x2" c/w door, 4" wide total	$114.20'
FR20204D	599639	20"x20"x4" c/w door, 7" wide total	$121.00
FR20251D	599641	20"x25"x1" c/w door, 3" wide total	$107.50
FR20252D	599615	20"x25"x2" c/w door, 4" wide total	$114.20
FR20254D	599638	20"x25"x4" c/w door, 7" wide total	$174.70

POWER HUMIDIFIERS

HONEYWELL

HONEYWELL TrueEASE Evaporative Humidification System

- Multiple snap-into-place configuration options
- Water and energy savings* homeowners will invest in
- Eliminates time-consuming installation steps
- Easy-access pad replacement for easy maintenance
- Quiet operation for fewer callbacks
- Interchangeable bypass to easily change bypass direction
- Installs in the same space as existing evaporative humidifiers
- Quick connect gasket for single step plumbing
- Replacement pad sales create recurring revenues
- 5-Year Warranty



Part #	Description	LIST
HE300A1005-RES	Fan-Powered 18 GPD	$1,353.00
HE250C1014-RES	Large Bypass Advanced 17 GPD	$1,119.00
HE150C1014-RES	Small Bypass Advanced 12 GPD	$615.00
HE100C1001-RES	Small Bypass Basic 12 GPD	$481.00

AIR CLEANERS

HONEYWELL

F300 Electronic Air Cleaner



The High-Performance Renewable, Low-Maintenance Solution To Cleaner Air.

- Media post-filter provides enhanced filtration on select models.
- Solid state power supply is self-regulating and maintains peak efficiency during a wide range dirt loading conditions.
- Low-profile door with test button to check system operation.
- Helps filter efficiency-robbing "gunk" before it coats critical system parts.
- Very low pressure drop.
- Exclusive 10-year Clean Coil Guarantee.

Part #	Description	LIST
F300E1019-RES	16X25 Envirocare Elite EAC	$2,668.00
F300E1027-RES	20X20 Envirocare Elite EAC	$2,668.00
F300E1035-RES	20X25 Envirocare Elite EAC	$2,996.00

F100F Media Air Cleaner



Cleaner Indoor Air.

- High efficiency media filter captures particles as small as 0.3 microns.
- Applicable to all gas, oil and electric forced air furnaces and to compressor cooling up to 5 tons.
- Mounts in the return air duct.
- Rugged zinc-coated, roll-formed cabinet resists corrosion and can support weight of residential furnace and evaporator coil.
- Requires no electrical connections.

DAFCO Filtration Group





All filters are available in standard sizes.

Part #	Description	LIST
1004190-FIL	Aerostar 36" X 20' X 1" Polyester Dry Media Roll	$77.60
GM60-25-20-2-FIL	Aerostar 25" X 20" X 2" Exact Cut Polyester Dry Service Roll	$123.40

- EPHC - Merv 10 High Capacity
- EPSC - Standard Capacity Pleats With A Merv 8 Rating In 1", 2" & 4".
- HCGP - High Capacity Pleats With A Merv 13 Rating In 1", 2" & 4".
- Cut Polyester Pads Dry Or Tacified In 1" & 2".
- Polyester Media Rolls In Various Sizes.
- AMF - Aluminium Mesh Filters

ELECTRO-AIR FILTERS

EANC

ElectroAir Whole House High Efficiency Media Air Cleaner

- Whole-House High Efficiency Media Air Cleaner,
- Cleans House Size
- 1200 - 2000 CFM Air Flow,
- 16" X 20", 16" X 25, 20" X 20", 20" X 25"
- Includes High Efficiency MERV 11 Media Filter

Part #	Description	LIST
EANC1620-A-ELA	ElectroAir Whole House High Efficiency Media Air Cleaner | MERV 11 | 16" X 20" Duct Size	$189.80
EANC1625-A-ELA	ElectroAir Whole House High Efficiency Media Air Cleaner | MERV 11 | 16" X 25" Duct Size	$180.30
EANC2020-A-ELA	ElectroAir Whole House High Efficiency Media Air Cleaner | MERV 11 | 20" X 20" Duct Size	$202.70
EANC2025-A-ELA	ElectroAir Whole House High Efficiency Media Air Cleaner | MERV 11 | 20" X 25" Duct Size	$192.50
EANC2520-A-ELA	ElectroAir Whole House High Efficiency Media Air Cleaner | MERV 11 | 25" X 20" Duct Size	$202.70



AIR PURIFIERS

NU-CALGON

iWave®-R



4900-20

With technology installed in over 100,000 applications worldwide, iWave-R is the world's first self-cleaning, bi-polar ionization air cleaner specially designed for residential duct air conditioning systems up to 6 tons (2400 CFM) in size. Needle-point ionization actively treats air in the living space with no replacement parts, no maintenance and universal voltage (24-260VAC). It can mount easily inside or outside of duct in about 15 minutes, or it can attach magnetically near indoor fan. iWave-R always works at peak performance, producing over 160 million ions/cc, more than any interior air quality product on the market. Patent-pending self-cleaning design includes programmable cleaning cycle with alarm contact option. UL and cUL approved. Three-year warranty.

Part #	LIST
4900-20	$1,402.00

iWave®-C



4900-10

Although it can be used for residential applications, the original iWave-C is especially suitable for light commercial systems up to 12 tons (4800 CFM). iWave-C is a self-cleaning, bi-polar ionization generator for treating a building's air quality that does not require replacement parts in a year or two like competing technologies. iWave-C always works at peak performance, producing over 200 million ions/cc, making it superior to other market approaches. Special features include a programmable cleaning cycle, waterproof housing, digital display and integral alarm contact. Can be used to reduce outside air for commercial applications per ASHRAE 62.1 IAQP. Duct mount to air handler inside or outside of building. For systems larger than 12 tons, multiple iWave-C units can be applied. UL and cUL approved with universal voltage (24-240VAC). Three-year warranty.

Part #	LIST
4900-10	$2,182.00

iWave®-F



4900-30

iWave-F is a flexible and highly versatile three foot ion-generating bar that can treat IAQ in nearly any HVAC application. Its revolutionary circuit bar with special ion-generating needles suitable for any HVAC cooling coil up to 48" wide. Plus, it can be shortened in the field to any size! Perfect for ducted package or ductless HVAC systems in living centers, hotels, commercial buildings, residential (including mini-splits), transport cooling coils or even in ice machines – applications where mold is an issue. Provides the highest level of ionization energy in the most compact size available on the market. Can be used to reduce outside air for commercial applications per ASHRAE 62.1 IAQP. UL and cUL approved with universal voltage (110-240VAC). Virtually maintenance free with no replacement parts. Produces over 240 million ions/cc per foot. Three-year warranty.

Part #	LIST
4900-30	$1,523.00

Application	iWave-F	iWave-R	iWave-C
Residential - Mini-Split A/C Systems	X		
Commercial - VRF A/C Systems	X		
PTAC Systems	X		
Residential Duct HVAC Systems	X	X	X
Light Commercial Duct HVAC Systems	X		X
Transport HVAC Systems	X		
Industrial HVAC Systems	X		
Ice Machines to Reduce Mold in Cabinet	X		

Features	iWave-F	iWave-R	iWave-C
Patented Self-Cleaning Technology		X	X
No Replacement Parts	X	X	X
No Maintenance	*	X	X
Kills Mold, Bacteria, and Viruses	X	X	X
Controls Odor (Cooking, Pet, VOCs)	X	X	X
Reduces Allergens	X	X	X
Prevents/Eliminates Dirty Sock Syndrome	X	X	X
Controls Particles in Air	X	X	X
Reduces Smoke	X	X	X
Reduces Static Electricity	X	X	X
Actively Treats Pathogens in Space (entire coil/living space)	X	X	X
Universal Voltage (24-240VAC)	110 - 240VAC	X	X
Reduces Outside Air Requirement for Commercial Systems	X		X
Universal Mounting	X	X	Duct Mounted
Customizable Length	X		
Digital Display/Weatherproof Housing			X
Alarm Contact Option for Notification		X	X
Replaceable Emitters		X	X
Service Temperature Range	-40°F to 160°F	-40°F to 160°F	-40°F to 160°F

** iWave-F requires low maintenance. The ionizer tape may require a wipe with damp cloth from time to time to ensure ionizer tips are clear of particles.*

ULTRAVIOLET AIR PURIFIERS

SANUVOX

SRMax *In-Duct UV Air Purifier*



The Sanuvox SR Max is the ideal air purifier system for homes up to 2,000 sq.ft. Borrowing from the larger R Max, the SR Max is a smaller version using the same high-efficiency patented design to destroy airborne bio-chemical contaminants while providing important user information on the multi-color LED Status Display.

Installed into the return or supply plenum, the Sanuvox proprietary process maximizes contact time between the air and UV energy. Thanks to its new Cobalt Catalyst Oxidation, VOCs are destroyed.

- Designed to destroy viruses, germs, bacteria, mold, chemicals, odors & allergens
- New Cobalt Catalyst Oxidation against VOCs
- Patented process incl. 19 mm Quartz UVC/UVV 'J' Lamp
- Multi-color LED Status Display provides important user information
- Intelligent ballast automatically switches from 110V to 240V

Part #	LIST
SR-MAX	$937.00

RMax *In-Duct UV Air Purifier*



The high-efficiency patented design destroys airborne bio-chemical contaminants while providing important user information on the 3" LCD display.

Installed into the return or supply plenum, the Sanuvox proprietary process maximizes contact time between the air and UV energy. Thanks to its new Cobalt Catalyst Oxidation, VOCs are destroyed. Able to treat homes up to 4,000 sq.ft.

- Designed to destroy viruses, germs, bacteria, mold, chemicals, odors & allergens
- New Cobalt Catalyst Oxidation against VOCs
- Patented process incl. 19 mm Quartz UVC/UVV 'J' Lamp
- 3" LCD Display showing real-time performance
- Intelligent ballast automatically switches from 110V to 240V
- Microprocessor controlled Thermistor for automatic operation
- UV Chamber rotates 360 degrees for up-flow or down-flow systems

Part #	LIST
R-MAX*D	$1,457.00

QUATTRO-GX

- Light commercial / Residential
- Treats the entire duct and destroys up to 99.99% of biological contaminants on one pass
- Destroys chemicals & biological odors
- Four Aluminum Anodized Parabolic Reflectors intensify & maximize 360° of UV Energy
- Pressure Sensor turns purifier On & Off. Simple installation, just "Plug & Play"
- Adjustable Clutch mechanism allows for Reflectors & Lamps to easily extend up to 15" to the center of a 30" duct
- Recommended Lamp change-out: Commercial: 2 years / Residential: 3 years



Part #	LIST
QUATTRO-GX-SAN	$3,286.00

Stand-Alone And/Or Ducted Models

P900-GX PORTABLE



- Portable, weighs 11 lbs
- Eradicates bacteria, viruses and mold.
- Destroys chemical and biological odors
- Purifies up to 900 sq ft
- 120 volt
- DC motor – very quiet
- Digital Controls – fan mode and timer
- Stand included
- 3 year warranty including UV light
- Homes, apartments, waiting rooms, break rooms, classrooms, offices, boats & RV's, hotel rooms, fire restoration and any application that would require spot biological & chemical purification

Part #	LIST
P900-GX-SAN	$1,457.00

ULTRAVIOLET AIR PURIFIERS

SANUVOX

Stand-Alone And/Or Ducted Models





S300FX-GX

A complete IAQ solution with one unit!

- Dual “J” lamp UVC/UVV
- Two speed blower (200/300 cfm), 120 volt
- 2” pre-filter and true 2” HEPA filter capture particles down to .3 microns
- Destroys biological contaminants such as mold, bacteria, viruses, germs, allergens
- Destroys chemicals and biological odors
- 3 year warranty including UV lamp (residential)
- 12,000 hours (commercial)
- HVAC by-pass for whole home filtration / purification or Stand-alone wall mounting
- Home filtration / purification, smoking rooms, hotels, commercial buildings, laboratories, nail salons, doctor's office, hospital patient rooms, dentist offices, etc.
- Stand Alone Option requires Louvers for inlet & outlet. Part# MSCLOU1 (sold in pairs)

Part #	LIST
S300FX-GX-SAN	$2,532.00

S1000-GX

- The Sanuvair® S1000 is designed for air purification of large room where HVAC systems are not available or accessible. This stand-alone unit helps reduce mold and bacteria from the air in a room up to 25,000 ft³.
- This unit is constructed of a lightweight aluminum case and has a three-stage purification process:
- Air is pulled into two return ports through an aluminum reflection chamber that houses 1 to 4 high intensity UV lamp.
- A 2" MERV 8 pre-filter captures the large particles.
- A 4" MERV 15 final filter captures 95% of 0.3 to 1 micron sized particles.
- The Sanuvair® S1000 has versatile mounting options.

Part #	LIST
S1000-GX-SAN	

Object Purifiers

CoilClean IL

- Designed to be installed facing the return side (or supply side) of a commercial evaporator coil or fancoil
- Destroy and prevent mold and other microbial growth
- Available in 12”, 18”, 24”, 30”, 40”, 50” & 60” Lamp lengths
- Replace Lamps after 17,000 hours of operation. Warranty is 12,000 hours from installation

Part #	Description	LIST
IL12-G	12" Lamp	$1,177.00
IL18-G	18" Lamp	$1,310.00
IL24-G	24" Lamp	$1,366.00
IL30-G	30" Lamp	$1,395.00'
IL40-G	40" Lamp	$1,508.00
IL50-G	50" Lamp	$1,455.00
IL60-G	60" Lamp	$1,745.00



CoilClean RT

- Specifically designed for exterior rooftop HVAC units
- Keep the A/C coil free from biological contaminants including mold and fungus.
- Uses a weatherproof NEMA 4X Housing
- Aluminum Anodized Parabolic Reflector to direct the UV Energy
- Available with 24”, 30”, & 40” Lamp lengths



Part #	Description	LIST
RT24-G-NN-SAN	24" Lamp	
RT30-G-SAN	30" Lamp	

ULTRAVIOLET AIR PURIFIERS

SANUVOX

Specialty Ultraviolet Products

HRV ultraviolet Air Purifier

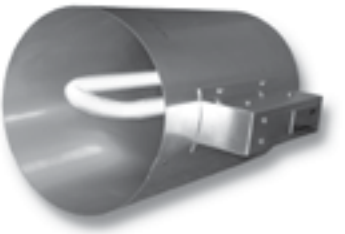

- Specifically designed to be connected to the “fresh air to inside duct” of an HRV / ERV unit
- Available in both 6” & 8” diameters.
- Commercial Odor & Chemical Exhaust Option
- Ideal for waste water processing, restaurants, hospitals, animal farms, manufacturing facilities, etc.
- Warranty: 3 years including Lamp

Part #	Description	LIST
HRV6-GX	6" Diameters	$894.00
HRV8-GX	8" Diameters	$948.00

CMU Ceiling Mount UV Air Purifier

- Mount in the return plenum filter box just before the filter
- Equipped with a Safety Cut-Off switch that disconnects power when filter is removed
- CMU-18 is for use in a plenum filter box with a return duct up to 18” diameter
- CMU-24 is for a filter box between 20” and 24” diameter.
- Filter box is field supplied.
- Warranty: 3 years including Lamp

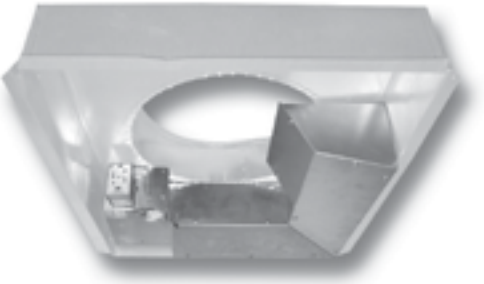

Sanuvox Parts are also available. Please contact your local branch for details.

FRESH-AIRE UV®

ICE UV™

AHR EXPO INNOVATION AWARD



Save on Ice Machine Cleaning & Maintenance

Sterilize Mold & Bacteria

Ice machine maintenance has become easier, safer, and more cost-effective with ICE UV™. UV-C light works continuously to sterilize mold, microbial growth & dangerous pathogens that thrive inside the dark, damp, cool interiors of ice machines, ice flakers and water dispensers. The ICE UV™ and ICE UV Mini™ systems are designed to produce just the right amount of UV-C light; enough to sterilize microbial contaminants including mold, viruses & bacteria without damaging plastic materials inside the ice machine.



FEATURES

- 2 Year water-resistant germicidal UV-C lamp
- Shatter-resistant Teflon® lamp coating
- Lifetime warranty on all parts except lamp
- 110-277 VAC electronic power supply
- Movable mounting bracket and shield
- Multi-lamp configurations for large systems

BENEFITS

- Effective against mold, bacteria & viruses
- Works continuously to keep ice machines clean
- Reduce health risks with cleaner, sterilized ice
- Saves money on ice machine maintenance
- Reduce biological odors

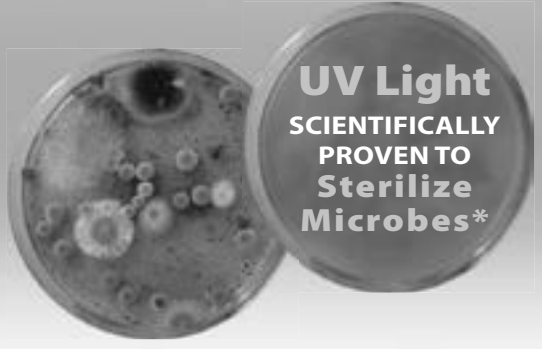

*** UVC LABORATORY TEST:**
90% of microbes are killed after 10 minutes
99.9% of microbes are killed after 24 hours

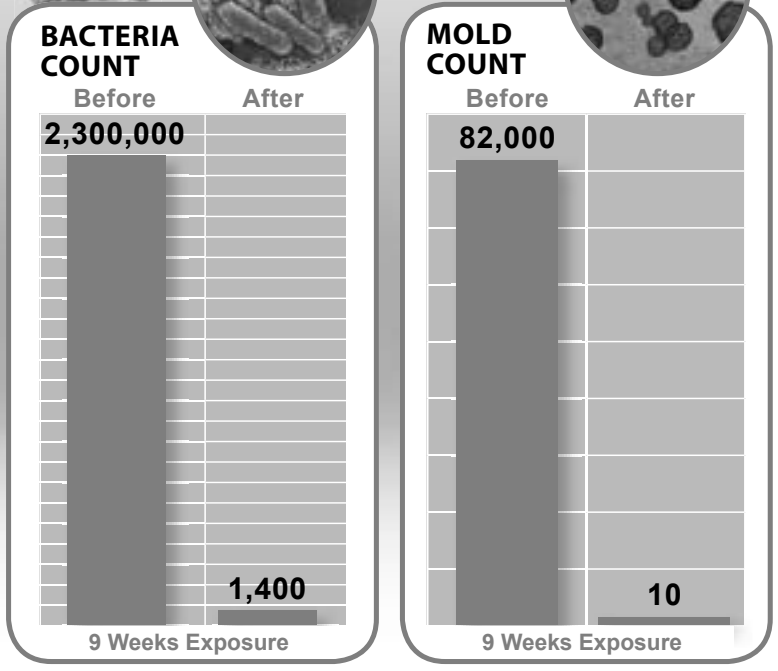

FRESH-AIRE UV®

ICE UV™

- Saves money on maintenance
- Kills mold, bacteria, & viruses
- Works 24/7 to keep ice maker clean
- Teflon® safety coated UV-C lamps
- Chemical-free disinfection
- Reduces liability risk

PART NUMBERS	
Single Lamp	TUV-ICE-ST
Dual Lamp	TUV-ICE-DT
Replacement Lamp	TUVL-ICE

SPECIFICATIONS	
UV Lamp	Standard 100% 254 nm Germicidal UV-C spectrum Effective 2 years Teflon safety coated with cathode guard filament
Dimensions	Lamp: 8"L x 0.74"Dia. Stainless steel lamp shield: 9.5" X 1" Power supply: 5" x 2.5" x 1"
Weight	1.5 lb.
Electrical	Auto switching multi-voltage 120 - 277 VAC, 0.51-0.22 Amps
Kits Include	Power supply & 12" power cord UV lamp(s) & 6' lamp cable(s) UV blocking tape Lamp mounting brackets Mounting hardware
Warranty	Lifetime for all parts except lamp

ETL LISTED c US
Intertek
CONFORMS TO UL STD 1598

ALL PARTS ★ LIFETIME WARRANTY ★ EXCEPT LAMPS

Mounting Options



A. Mount on lid between evaporator and deflector



B. Mount over ice collection bin (ideal second Ice UV lamp location) use with optional interlock switch



3 & 4 lamp systems also available

More Systems



32" lamp systems are available for larger ice machines.

FRESH-AIRE UV®

ICE UV MINI™

Think Small

There can be too much of a good thing! Because the 10-watt UV-C lamp in ICE UV™ may be too powerful for use in most countertop ice & water dispensers we've introduced ICE UV Mini™ which features a pencil-thin 4-watt UV-C lamp and a compact power supply.



FRESH-AIRE UV®

800-741-1195

WWW.FRESHAIREUV.COM

Made in USA

© 2017

SALES@FRESHAIREUV.COM

TUVC-ICE-SPEC 4.24.17

EVAPORATIVE COOLERS

CHAMPION COOLERS

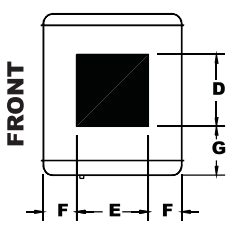

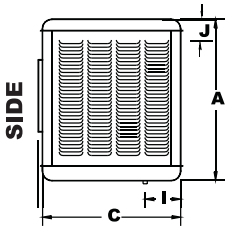

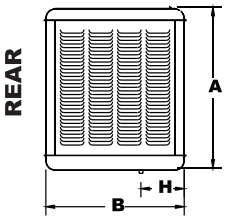



Side Discharge General Specifications (in inches)

Model No.	Dimensions			Duct Opening			Drain Outlet		Water Inlet	Power Inlet	LIST
	A	B	C	5	E	F	G	H	I	J	
N40/N45S	34-1/2	34-1/8	34-1/8	17-3/4	17-3/4	8-3/16	12-1/16	10-21/32	8-3/4	4-5/8	$2,494.00
N55/65S	42-7/16	39	39	19-3/4	19-3/4	9-5/8	16-21/32	15-21/32	8-3/4	4-5/8	$5,282.00

*** Motor is not included**

Performance Data

Model No.	Ind. Std. Rating	HP	Inches of Static Pressure						Area: Sq. Ft.	Pad Dimensions			HP	Speed	Volts	Blower Wheel	Blower Pulley Dia. x Bore	Motor Pulley Dia. x Bore	Belt Length
			0	-1	-2	-3	-4	-5		No. RQD	HGT.	Width							
N40/45S	4000 4000	1/3	2973	2726	2550	2230	NR	NR	700 to 1200	3	28	27	1/3	1 or 2	115	16x16	10x1	3-1/2x1/2	56
N40/45S	4500 4500	1/2	3432	3230	3000	2775	2140	1475	700 to 1200	3	28	27	1/2	1 or 2	115	16x16	10x1	3-1/2x1/2	56
N55/65S	5500 5500	1/2	4190	3910	3650	3330	2900	NR	1200 to 1600	3	36	33	1/2	1 or 2	115	20x16	12x1	3-1/2x1/2	67
N55/65S	6500 6500	3/4	4734	4600	4320	4060	3810	3630	1200 to 1600	3	36	33	3/4	1 or 2	115	20x16	12x1	3-1/2x1/2	67

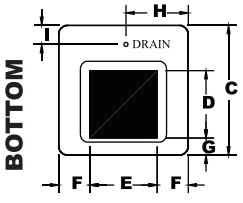

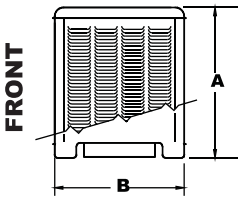

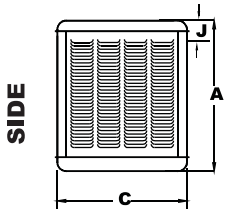



Down Discharge General Specifications (in inches)

Model No.	Dimensions			Duct Opening			Drain Outlet		Water Inlet	Power Inlet	LIST
	A	B	C	D	E	F	G	H	I	J	
N43/N48D	34-1/2	34	34	17-3/4	17-3/4	8-3/16	4-1/4	16-3/8	5	4-5/8	$4,503.00
N56/66D	42-7/16	39	39	19-3/4	19-3/4	9-5/8	4-1/4	25-3/8	5-1/2	4-5/8	$5,662.00

*** Motor is not included**

Performance Data

Model No.	Ind. Std. Rating	HP	Inches of Static Pressure						Area: Sq. Ft.	Pad Dimensions			HP	Speed	Volts	Blower Wheel	Blower Pulley Dia. x Bore	Motor Pulley Dia. x Bore	Belt Length
			0	-1	-2	-3	-4	-5		No. RQD	HGT.	Width							
N43/48D	4100 4100	1/3	3077	2880	2565	2240	NR	NR	800 to 1400	4	28	27	1/3	1 or 2	115	16x16	10x1	3-1/2x1/2	56
N43/48D	4800 4800	1/2	3654	3430	3230	3064	2998	2010	800 to 1400	4	28	27	1/2	1 or 2	115	16x16	10x1	3-1/2x1/2	56
N56/66D	5600 5600	1/2	4334	4000	3620	3300	2610	2170	1400 to 1800	4	36	33	1/2	1 or 2	115	20x16	12x1	3-1/2x1/2	69
N56/66D	6600 6600	3/4	4983	4780	4530	4280	4020	3780	1400 to 1800	3	36	33	3/4	1 or 2	115	20x16	12x1	3-1/2x1/2	69

WATER SOURCE HEAT PUMPS

COMFORT-AIRE

HB Series Compact Commercial



Model Nomenclature – General Overview

1 2 3 4 5 6 7 8 9 10 11 12 13 14

HB V 024 A 1 C 3 0 C P T

Series
HB = Heat Controller Compact

Configuration
V = Vertical Up
H = Horizontal

Unit Size
006
009
012
015
018
024
030
036
041(HBV only)
042
048
060

Revision Level
A = Current Revision

Voltage
1 = 208-230/60/1
3 = 208-230/60/3
4 = 460/60/3
5 = 575/60/3
8 = 265/60/1

Controls
C = CXM
D = DXM2
L = CXM w/LON
M = DXM2 w/LON
N = CXM w/MPC
P = DXM2 w/MPC

Cabinet
1 = Commercial Extended Range
2 = Commercial Extended Range w/UltraQuiet
3 = Commercial Standard Range
4 = Commercial Standard Range w/UltraQuiet
C = Commercial Standard Range, Cooling Only, vertical units

Valve
0 = None
3 = Discharge Pressure Water Regulating Valve (Cooling Only)

Heat Exchanger Options
C = Copper Water Coil, Non Coated Air Coil
N = Cupro-Nickael Water Coil, Non Coated Air Coil
A = Copper Water Coil, Coated Air Coil
J = Cupro-Nickel Water Coil, Coated Air Coil
[4,5,6] 1 = Copper Water Coil/Tin-Plates Air Coil/E-Coated Water Side Economizer Coil
[4,5,6] 2 = Copper Water Coil/Water Side Economizer
[4,5,6] 3 = Cupro-Nickel Water Coil/Tin-Plates Air Coil/E-Coated Water Side Economizer
[4,5,6] 4 = Cupro-Nickel Water Coil/Water Side Economizer

Return Air Flow Configuration
P = Left Return
C = Right Return
S = Left Return, S.S Drain Pan
T = Right Return, S.S Drain Pan
[7] Q = Front Return, S.S Drain Pan

Supply Air Flow & Motor Configuration

	Supply	Configuration	Motor
T	Top	HBV	PSC
B	Back	HBH	PSC
S	Straight	HBH	PSC
[1,6] V	Top	HBV	PSC Hi Static
[1,6] Y	Back	HBH	PSC Hi Static
[1,6] Z	Straight	HBH	PSC Hi Static
[1,2,3,6] K	Top	HBV	ECM
[1,2,3,6] P	Back	HBH	ECM
[1,2,3,6] W	Straight	HBH	ECM

[Notes]
1. Not available on sizes 006, 009, 012.
2. If digit 14 is K, P, or W then digit 9 must be options D, M, or P.
3. Not available in 575v voltage
4. If digit 12 is 1, 2, 3, or 4 then digit 9 must be C, D, M, or P.
5. If digit 12 is 1, 2, 3, or 4 then digit 13 cannot be P, C, or Q.
6. Not available on size 041
7. Not available in sizes 006, 036, 041, 042, 048, or 060

Note: Above model nomenclature is a general reference. Not all configurations are available on all models. Consult selection software for detailed information.

WATER SOURCE HEAT PUMPS

COMFORT-AIRE

	WATER LOOP PERFORMANCE*				
Model	86ºF EWT	EER	Heating BTUH @ 68ºF EWT	COP	Shipping Weight (lbs)
HBH/HBV006	5,800	13.2	7,500	4.7	113
HBH/HBV009	8,800	13.4	11,600	4.2	115
HBH/HBV012	11,700	13.5	15,200	4.3	124
HBH/HBV015	14,500	15.4	17,300	5.0	158
HBH/HBV018	17,300	14.3	21,500	5.0	163
HBH/HBV024	23,700	13.4	28,500	4.7	194
HBH/HBV030	28,100	13.4	35,100	4.6	202
HBH/HBV036	34,500	13.5	45,200	4.4	209
HBH/HBV042	40,100	13.1	52,700	4.3	224
HBH/HBV048	47,700	13.3	55,900	4.7	270
HBH/HBV060	59,400	13.4	77,000	4.3	285

Individually packaged units are designed specifically for boiler-tower closed loop applications. Each unit can be operated year 'round in heating or cooling mode, providing zone control and independent operation. This makes them ideal for multi-story stuctures such as office buildings, as well as single story facilities such as nursing homes and schools. Individual units are connected by a water loop which transfers energy into and out of the individual units. Larger sizes are available, please see your local RSL Branch for more information

Available voltages: 208/230-1-60, 208/230-3-60, 460-3-60, 575-3-60, 265-1-60, although all models are not available in all voltages. See HB Engineering Design Guide or Price Sheet for complete part number list.

All units available in right or left return.

See Engineering Design Guide for Ground Water/Ground Loop performance data.

** Units rated in accordance with ISO 13256-1*

Please call your local branch for pricing

Stainless Steel Hose Kit (2-2' foot hoses) with Balance Valve, Shut-Off Valve, with memory stop and PT Plugs | *Hose Length 2', 3' overall.*

MODEL	CONNECTION SIZE (in.)	CONN. TYPE UNIT	CONN. TYPE FIELD	FOR USE WITH MODELS	LIST
7602-130	1/2	MPT	FPT	HBH006, HBH/V009, HBH/V012, HBH/V018	$439.00
7602-131	3/4	MPT	FPT	HBH/024, HBH/V030, HBH/036, HBH/V042	$598.00
7602-132	1	MPT	FPT	HBH/V048, HBH/V060	$951.00

Stainless Steel Hose Only

Unit connection and field connection are both MPT; no P/T port.

MODEL	CONNECTION SIZE (in.)	LENGTH	FOR USE WITH MODELS	LIST
CRH24-1/2	1/2	2'	HBH/006, HBH/V009, HBH/012, HBH/V018	$92.00
CRH24-3/4	3/4	2'	HBH/024, HBH/V030, HBH/036, HBH/V042	$125.90
CRH24-1	1	2'	HBH/V048, HBH/V060	$372.00
CRH24-1-1/4	1-1/4	2'	HBH072, HBH096	$372.00
CRH24-1-1/2	1-1/2	2'	HBH120	-
CRH36-1/2	1/2"	3'	HBH/V006, HBH/V009, HBH/V012, HBH/V018	$107.50
CRH36-3/4	3/4"	3'	HBH/V024, HBH/V030, HBH/V036, HBH/V042	$147.80
CRH36-1	1"	3'	HBH/V048, HBH/V060	$280.30



WATER COOLED AIR CONDITIONERS
THERMOPLUS AIR

KACE WATER-COOLED AIR CONDITIONERS

HORIZONTAL / VERTICAL SERIES
180,000 BTU/HR TO 720,000 BTU/HR

KACE packaged horizontal (up to model 360) and vertical units (up to model 720) feature R410a scroll compressor, are designed for ducted connections.

Standard Features:

- Factory installed water-regulating valve adjusted to provide a pressure regulated water flow thus keeping constant condensing pressure in the system
- 24V terminal strip for thermostat connection
- Refrigerant High and low pressure cut-out switches
- Access ports on high and low sides
- Thermostatic expansion valve
- Galvanized G90 casing with 1/2" insulation
- 1" Merv 8 Filter
- Co-Axial condenser

Optional Features:

- Back Discharge
- Aqua Aero coated coils
- Copper or Epoxy fin coils
- VFD or Larger motor for higher ESP applications (084+)
- Non-fused disconnect
- Compressor sound cover
- 2-stage or Digital compressor (exceptions apply)
- Cupro-nickel co-axial condenser
- 2" filters (Merv 8, 11 or 13)
- Prepainted galvanized cabinet
- Heat pump operation
- DDC Controls w/BACnet
- 300 psi operating condition on waterside



Operating Range:

- Entering Air 70F thru 80F DB/61F thru 67F WB
- Entering Water A/C mode 40F thru 90F
- ESP - Direct Drive up to 0.5"/ Belt Driven up to 2"

KACE SERIES (HORIZONTAL)												
Model	Norminal CFM	# of Comp	Total[1] Cooling (Btu/h)	Sensible[1] Cooling (Btu/h)	US GPM[2]	MCA[3] (60Hz)			Dimensions[4] (")			Approx Weight (lbs)
						208-230/3	460/3	575/3	W	H	D	
KACE-018H	600	19367	13,609	4.5	16	-	-	-	42.25	19.5	22.25	200
KACE-024H	800	25437	18,450	6.0	21	14	8	6	42.25	19.5	22.25	203
KACE-030H	1000	31253	22,278	7.5	22	16	8	7	54.25	21.5	26.25	240
KACE-036H	1200	35968	25,848	9.0	22	16	10	7	54.25	21.5	26.25	255
KACE-048H	1600	47776	35,384	12.0	33	25	12	8	54.25	21.5	26.25	307
KACE-060H	2000	65791	45,392	15.0	41	28	16	10	60.25	21.5	30.25	335
KACE-072H	2200	72333	51,688	18.0	46	34	16	12	60.25	21.5	30.25	357
KACE-084H	2800	83341	56,093	21.0	53	33	18	12	60.25	21.5	30.25	394
KACE-096H	3200	97215	69,932	24.0	-	39	18	13	75.25	27	38.25	713
KACE-120H	4000	127656	88,659	30.0	-	50	27	18	75.25	27	38.25	775
KACE-144H	4600	143851	99,902	35.0	-	60	28	23	75.25	27	38.25	787

1. *At air on 82FDB/67FWB*
2. *External Static Pressure at 0.5" WG*
3. *filter holder and outdoor air connections not included*

Data subject to change without notice

WATER COOLED AIR CONDITIONERS

THERMOPLUS AIR

KACE WATER-COOLED AIR CONDITIONERS

VERTICAL SERIES
18,000 BTU/HR TO 144,000 BTU/H

KACE packaged vertical units feature R410a scroll compressor, with right or left return and are suitable for duct connections or for use with optional free air discharge plenum



Standard Features:

- Factory installed water-regulating valve adjusted to provide a pressure regulated water flow thus keeping constant condensing pressure in the system
- X13 fan motor with 3 adjustable speeds (models 018-072)
- Adjustable motor pulley (models 084-144)
- 24V terminal strip for thermostat connection
- Access ports on high and low sides
- Thermostatic expansion valve
- Galvanized G90 casing with 1/2" insulation
- 1" Merv 8 Filter
- Co-Axial condenser

Optional Features:

- Discharge Plenum
- Aqua Aero coated coils
- Copper or Epoxy fin coils
- VFD or Larger motor for higher ESP applications (084+)
- Non-fused disconnect
- Compressor sound cover
- 2-stage or Digital compressor
- Cupro-nickel co-axial condenser
- 2" filters (Merv 8, 11 or 13)
- Prepainted galvanized cabinet
- Heat pump operation
- DDC Controls w/BACnet
- 300 psi operating condition on waterside

Operating Range:

- Entering Air 70F thru 80F DB/61F thru 67F WB
- Entering Water A/C mode 40F thru 90F
- ESP - Direct Drive up to 0.5"/ Belt Driven up to 2"

KACE SERIES (VERTICAL)												
Model	Norminal CFM	# of Comp	Total[1] Cooling (Btu/h)	Sensible[1] Cooling (Btu/h)	US GPM[2]	MCA[3] (60Hz)			Dimensions[4] (")			Approx Weight (lbs)
						208-230/3	460/3	575/3	W	H	D	
KACE-018V	600	19367	13,609	4.5	16	-	-	-	22.25	40.5	22.25	200
KACE-024V	800	25437	18,450	6.0	21	14	8	6	22.25	40.5	22.25	210
KACE-030V	1000	31253	22,278	7.5	22	16	8	7	26.25	47.5	26.25	245
KACE-036V	1200	35968	25,848	9.0	22	16	10	7	26.25	47.5	26.25	265
KACE-048V	1600	47776	35,384	12.0	33	25	12	8	26.25	47.5	26.25	305
KACE-060V	2000	65791	45,392	15.0	41	28	16	10	31.25	55.5	26.25	335
KACE-072V	2200	72333	51,688	18.0	46	34	16	12	31.25	55.5	26.25	360
KACE-084V	2800	83341	56,093	21.0	53	33	18	12	31.25	55.5	26.25	395
KACE-096V	3200	97215	69,932	24.0	-	39	18	13	42.25	66.5	32.25	715
KACE-120V	4000	127656	88,659	30.0	-	50	27	18	42.25	66.5	32.25	775
KACE-144V	4600	143851	99,902	35.0	-	60	28	23	42.25	66.5	32.25	790

1. At air on 82FDB/67FWB
2. External Static Pressure at 0.5" WG
3. filter holder and outdoor air connections not included

Data subject to change without notice

WATER COOLED AIR CONDITIONERS

THERMOPLUS AIR

KACE WATER-COOLED AIR CONDITIONERS

HORIZONTAL / VERTICAL SERIES
180,000 BTU/HR TO 720,000 BTU/HR

KACE packaged horizontal (up to model 360) and vertical units (up to model 720) feature R410a scroll compressor, are designed for ducted connections.



Standard Features:

- Factory installed water-regulating valve adjusted to provide a pressure regulated water flow thus keeping constant condensing pressure in the system
- Adjustable motor pulley
- 24V terminal strip for thermostat connection
- Refrigerant High and low pressure cut-out switches
- Access ports on high and low sides
- Thermostatic expansion valve
- Galvanized G90 casing with 1/2" insulation
- 2" Merv 8 Filter
- Co-Axial condenser
- Right return

Optional Features:

- Aqua Aero coated coils
- Copper or Epoxy fin coils
- Larger motor for higher ESP applications
- Non-fused disconnect
- Compressor sound cover
- Digital compressor (on 1st circuit)
- Cupro-nickel co-axial condenser
- 2" Merv 11 or 13 filters
- VFD or EC Plenum fan
- Heat pump operation
- DDC Controls w/BACnet
- 300 psi operating condition on waterside

Operating Range:

- Entering Air 70F thru 80F DB/61F thru 67F WB
- Entering Water A/C mode 40F thru 90F
- ESP - up to 2.5"

KACE SERIES (LARGE)												
Model	Norminal CFM	# of Comp	Total[1] Cooling (Btu/h)	Sensible[1] Cooling (Btu/h)	US GPM[2]	MCA[3] (60Hz)			Dimensions[4] (")			Approx Weight (lbs)
						208-230/3	460/3	575/3	W	H	D	
KACE-180H	6000	2	183881	130,601	45	62	30	22	86	44	52.5	1800
KACE-240H	8000	2	244301	176,288	60	76	42	33	86	44	52.5	2200
KACE-300H	10000	2	301330	223,665	75	129	59	55	112	55	64	2800
KACE-360H	12000	2	379364	259,096	90	137	62	58	112	55	64	2950
KACE-048H	1600	47776	35,384	12.0	33	25	12	8	54.25	21.5	26.25	307
KACE-180V	6000	2	183881	130,601	45	62	30	22	82	63.25	32	2000
KACE-240V	8000	2	244301	176,288	60	76	42	33	82	69.25	32	2200
KACE-300V	10000	2	301330	223,665	75	129	59	55	86	87.75	38.25	2800
KACE-360V	12000	2	379364	259,096	90	137	62	58	86	87.75	38.28	2950
KACE-480V	16000	3	480473	356,974	120	135	71	52	112	84.25	40	3800
KACE-600V	20000	3	612229	393,314	150	270	118	97	112	97.25	48	4000
KACE-720V	24000	4	783277	549,924	180	233	125	110	140	93	54	4250

1. *At air on 82FDB/67FWB*
2. *External Static Pressure at 0.5" WG*
3. *filter holder and outdoor air connections not included*

Data subject to change without notice

WATER COOLED AIR CONDITIONERS

THERMOPLUS AIR

KACSE WATER-COOLED AIR CONDITIONERS

SPLIT INDOOR CONDENSING UNIT
18,000 BTU/HR TO 144,000 BTU/HR

KACE packaged vertical units feature R410a scroll compressor, with right or left return and are suitable for duct connections or for use with optional free air discharge plenum

Standard Features:

- Factory installed water-regulating valve adjusted to provide a pressure regulated water flow thus keeping constant condensing pressure in the system
- Refrigerant High and low pressure cut-out switches
- Access ports on high and low sides
- Thermostatic expansion valve
- Galvanized G90 casing with 1/2" insulation
- 1" Merv 8 Filter
- Co-Axial condenser
- Sweat-type refrigerant connections
- Front access electrical service panel
- 24V dry contact terminal to enable/disable compressor(s)

Optional Features:

- Non-fused disconnect
- 2-stage or Digital compressor
- Cupro-nickel co-axial condenser
- 2" filters (Merv 8, 11 or 13)
- Prepainted galvanized cabinet
- 300 psi operating condition on waterside

Operating Range:

- 45F Suction (SST) & 105F Condensing (SCT)
- Entering Water A/C mode 40F thru 90F



KACE SERIES (CONDENSING UNIT										
Model	Total[1] Cooling (Btu/h)	US GPM[2]	MCA[3] (60Hz)				Dimensions[2] (")			Approx Weight (lbs)
			208-230/1	208-230/3	460/3	575/3	W	H	D	
KACSE-018	17832	4.5	12	-	-	-	26	23	26	120
KACSE-024	22918	6.0	17	10	5	-	26	23	26	125
KACSE-030	29508	7.5	18	12	7	5	26	23	26	140
KACSE-036	34003	9.0	18	12	7	5	26	23	26	150
KACSE-048	43896	10.5	25	17	8	6	26	23	26	210
KACSE-060	59722	12.0	33	20	10	8	26	23	31	225
KACSE-072	66965	16.0	38	26	12	10	26	23	31	240
KACSE-084	83600	21.0	-	29	14	10	26	23	31	260
KACSE-096	87792	24.0	-	31	14	10	32	26	42	290
KACSE-120	119444	30.0	-	36	18	13	32	26	42	320
KACSE-144	133930	35.0	-	47	22	18	32	26	42	345

1. At 45F Suction(SST) & 105F Condensing (SCT)
2. Water + refrigerant connections not included

Data subject to change without notice

DEHUMIDIFYING UNITS
THERMOPLUS AIR

SDA PACKAGE DEHUMIDIFIER

COMPACT DEHUMIDIFIER
5.7 LBS/HR TO 27 LBS/HR

SDA indoor packaged dehumidification unit with optional air or water-cooled air conditioning for light commercial and residential dehumidfication applications (greenhouses, restaurants, warehouses, storage facilities, etc…)

Standard Features:

- Forward curve EC fan motor (except 012 + 016)
- EC Plenum fan motor (012 + 016 only)
- 24V terminal strip for thermostat connection
- Refrigerant High and low pressure cut-out switches
- Access ports on high and low sides
- Thermostatic expansion valve
- Rotary (012/016) or scroll compressor (024-060)
- Epoxy fin coils
- Pre-painted G90 galvanized casing with 1/2" insulation
- 2" Merv 8 Filter
- Partial reheat

Optional Features:

- Multi Discharge options (012+016)
- Copper or Epoxy fin coils
- Aqua Aero coated coils
- Copper fin coils
- Non-fused disconnect
- Compressor sound cover
- Full Reheat
- Air or water-cooled option
- Remote air-cooled condenser
- Merv 11 or 13 filters
- Humidistat/Thermostat
- DDC Controls w/BACnet



Operating Range:

- Entering Air 70F thru 100F DB
- Relative Humidity from 40 thru 70%
- ESP - Direct Drive up to 0.5"

KACE SERIES (CONDENSING UNIT											
Model	Moisture Removal[1] lb/h	Nominal CFM	Sensible Cooling[1] Btu/h	MCA[2] (60Hz)				Dimensions[3] (")			Approx Weight (lbs)
				115/1	208-230/1	208-230/3	575/3	W	H	D	
SDAF-012	5.7	300	7750	14	9	-	29	23	18	195	120
SDAF-016	7.0	400	9750	-	11	-	29	23	18	205	125
SDAF-024	11.9	565	16000	-	23	15	38	28	18	310	140
SDAF-030	13.1	660	18000	-	25	16	38	28	18	340	150
SDAF-036	16.5	800	22400	-	28	20	43	31	22	420	210
SDAF-042	18.4	875	24800	-	30	20	43	31	22	440	225
SDAF-048	20.4	970	27400	-	32	22	43	31	22	455	240
SDAF-060	27.0	1280	36000	-	40	27	51	36	22	565	260

1. At air on 80F and 60% RH
2. External Static Pressure at 0.5" WG
3. Add 4" for filter rack and 1" for supply duct connection

Data subject to change without notice

DEHUMIDIFYING UNITS

THERMOPLUS AIR

IRD PACKAGE DEHUMIDIFIER

ICE RINK DEFOGGER
15 LBS/HR TO 27 LBS/HR

IRD indoor packaged dehumidification unit specifically designed for optimal airflow and maximum moisture removal for arenas (skating, hockey, curling)

Standard Features:

- Refrigerant components out of air stream to ease service accesibility
- Plenum fan motor
- Continous fan operation to prevent humidity build-up on off cycle
- Innovative demand defrost system for quick and efficient defrost
- Heated stainless steel drain pan
- True subcooling circuit
- Refrigerant High and low pressure cut-out switches
- External high & low pressure service access valves and sight glass
- Thermostatic expansion valve
- Pre-painted G90 galvanized casing with 1/2" insulated duct liner
- 2" Merv 8 Filter

Optional Features:

- Aqua Aero coated coils
- Non-fused disconnect
- Compressor sound cover
- Merv 11 or 13 filters
- DDC Controls w/BACnet
- Air Supply Diffuser

Operating Range:

- Entering Air 40F thru 80F DB
- Relative Humidity from 50 thru 100%
- ESP - Direct Drive up to 1.5"



KACE SERIES (CONDENSING UNIT										
Model	Moisture Removal[1] lb/h	Nominal CFM	MCA[2] (60Hz)				Dimensions[3] (")			Approx Weight (lbs)
			208-230/1	208-230/3	460/3	600/3	W	H	D	
IRD-035	15.0	2800	44	30	14	10	60	37 1/2	48	915
IRD-050	16.5	3400	38.4	29.4	15.4	11.6	60	37 1/2	48	932
IRD-075	24.8	4000	-	35.9	20.3	20	60	37 1/2	48	932
IRD-100	27.0	5500	-	51.6	24.6	17.3	60	54 3/4	48	1306

1. *At air on 60F and 55% RH*
2. *External Static Pressure at 0.5" WG*
3. *ESP - Direct Drive up to 1.5"*

Data subject to change without notice

AIR COOLED CONDENSERS

THERMOPLUS AIR

CDS AIR COOLED CONDENSER

OUTDOOR REMOTE AIR COOLED CONDENSER
43,500 BTU/HR TO 174,900 BTU/HR

CDS outdoor remote air cooled condensers are designed for R410a operation

Standard Features:

- Top discharge dissipates sound away
- Efficient AC Axial fans
- Galvanized G90 casing with 1/2" insulated duct liner
- Sweat-type refrigerant coil connections
- Front access electrical service panel

Optional Features:

- Non-fused disconnect
- Prepainted galvanized cabinet
- EC Axial Fan w/pressur controller
- Copper or Epoxy fin coating
- Aqua Aero coated coils
- Dry-type fluid cooler application (FDS)
- Low ambient operation

Operating Range:

- Entering Air -40F thru 100F DB



KACE SERIES (CONDENSING UNIT															
Model	THR (MBH) - R410a TEMPERATURE DIFFERENCE				FAN ARR.		CONN. SIZE [1]		REF. CHARGE LBS.		WEIGHT	MCA (60Hz)[2]			
	1	15	20	25	WIDE	LONG	DISCH.	LIQUID	SUM	WINTER	LBS	-4	-5	-7	-8
CDS-044	1.7	26.1	34.8	43.5	1	1	5/8"	1/2"	2.90	9.13	160	6	5	3	-
CDS-066	2.6	39.5	52.6	65.8	1	1	5/8"	1/2"	4.35	13.69	175	6	5	3	-
CDS-085	3.4	50.8	67.7	84.7	1	1	3/4"	1/2"	5.80	18.26	200	6	5	3	-
CDS-098	3.9	58.5	78.0	97.5	1	2	7/8"	5/8"	5.38	16.96	260	11	9	5	-
CDS-131	5.2	78.3	104.4	130.5	1	2	7/8"	5/8"	8.08	25.43	290	11	9	5	-
CDS-175	7.0	104.9	139.9	174.9	1	2	1-1/8"	5/8'	10.77	33.91	340	11	9	5	-

1. Maximum 50 FT equivalent distance. Condenser location above or same level of the unit
2. For 575V applications (-8) please contact factory

Data subject to change without notice

PORTABLE AIR CONDITIONERS

PERFECT AIRE

2PORT12000A



Features:

- Electronic controls
- Temperature output range of 62°F–86°F (17°C–30°C)
- Bucketless drain system
- Auto restart function
- Easy to install & operate
- Sleep mode
- Easy access washable filter
- Full function remote control
- Easy roll casters
- Variable cooling speeds
- CEC Compliant

SPECIFICATIONS	
UPC Code	8-42149-09099-9
COOLING CAPACITY (Btu)	6,500
DOE SACC COVERAGE (sq. ft.)	245
CEER	6.7
ENERGY STAR RATED	No
FAN SPEEDS (Cool/Fan)	3/3
AMPS	8.5
WATTS	670
DECIBELS (Hi/Mi/Lo)	58/54/53
VENT HOSE LENGTH (in.)	59
TIMER	24 hr
UNIT DIMENSIONS (WxHxD) (in.)	17.25 x 28.5 x 13.5
PKG. DIMENSIONS (WxHxD) (in.)	18.75 X 34.25 X 16.25
STUFFING QTY. (20'/40'/40' HQ)	140/282/419
WEIGHT (NET/GROSS) (lbs.)	57/67
REFRIGERATION	R410A
OUTLET CONFIGURATION	15 AMP 115V
LIST PRICE	$1,073.00

SPOT6800

Features:

- Exhaust fan dissipates heat for added comfort
- Auto shut off when the tank is full
- Heavy duty coasters for easy transport
- Compressor overload shut-off protection
- Washable, reusable air filter
- Perfect for hot summer days with operation up to 109°C



SPECIFICATIONS	
UPC Code	8-4214909118-7
COOLING CAPACITY (Btu)	5,300
DOE SACC COVERAGE (sq. ft.)	135
CEER	6.63
ENERGY STAR RATED	No
WATER TANK CAPACITY (pts.)	6.3
OPERATING TEMPERATURE RANGE	68-109
CONTINUOUS DRAINAGE	Yes
BUCKET-FULL INDICATOR	Yes
VOLTS	115W
DECIBELS	52
UNIT DIMENSIONS (WxHxD) (in.)	18.5 X 23 X 11.5
PKG. DIMENSIONS (WxHxD) (in.)	22 X 28 X 13
QTY OF 40" HQ (pcs.)	441
WEIGHT (NET/GROSS) (lbs.)	56/62
REFRIGERATION	R410A
OUTLET CONFIGURATION	15 AMP 115V
LIST PRICE	

ROOM AIR CONDITIONERS

MOVINCOOL



Climate Pro K Series

Features:

- Made especially for commercial spaces where comfort is essential to productivity.
- Cools to mid-60s °F — for effective heat control around electronics, servers, and computers.
- Air-cooled models from 12,000 to 60,000 Btu/h — let you size efficiently for your space.
- Digital controls and auto operation — allow 24/7 programmable back-up of central systems.
- Effective moisture removal — hastens drying for humid and water-damaged areas.
- Connectivity ready with remote monitoring, geolocation and performance notifications.*

SPECIFICATIONS				
		K12	**K18**	**K24**
COOLING CAPACITY	Rating Conditions 95ºF @ 60%RH	12,000 Btu/h	16,800 Btu/h	23,600 / 24,000 Btu/h
CHARACTERISTICS	Voltage Requirment (60 Hz)	1 Phase, 115 V	1 Phase, 115 V	1 Phase, 208 / 230 V
	Total Power Consumption	1.2 kW	1.7 kW	2.9 kW*
	Reccomended Fuse Size	15 amps	20 amps	20 amps
	Min - Max Voltage	104 - 127 V	104 - 127 V	198 - 253 V
REFRIGERANT	Type	R-410A	R-410A	R-410A
DIMENSIONS	W x D x H	22 x 27 x 47 in	22 x 27 x 47 in	22 x 27 x 51
NET WEIGHT / SHIPPING WEIGHT		166 / 208 lb	172 / 209 lb	205 / 243 lb
POWER CORD	Gauge	14 AWG (3-core)	12 AWG (3-core)	12 AWG (3-core)
	Length	10ft	10ft	6ft
MAX. DUCT LENGTH	Per Cold Duct Hose	30 ft	25 ft	50 ft
	Hot Duct Hose	60 ft	60 ft	40 ft

		K36	**K60**	**K63**
COOLING CAPACITY	Rating Conditions 95ºF @ 60%RH	36,000 Btu/h	60,000 Btu/h	60,000 Btu/h
CHARACTERISTICS	Voltage Requirment (60 Hz)	1 Phase, 208/230 V	1 Phase, 208/230 V	3 Phase, 406 V
	Total Power Consumption	4.3 kW*	6.6 kW*	6.6kW
	Reccomended Fuse Size	30 amps	50 amps	20 amps
	Min - Max Voltage	198 - 253 V	198 - 253 V	440 - 480 V
REFRIGERANT	Type	R-410A	R-410A	R-410A
DIMENSIONS	W x D x H	31 x 55 x 53 in	31 x 55 x 64 in	31 x 55 x 64 in
NET WEIGHT / SHIPPING WEIGHT		454 / 535 lb	582 / 666 lb	659 / 743 lb
POWER CORD	Gauge	12 AWG (3-core)	6 AWG (3-core)	12 AWG (3-core)
	Length	6 ft	6 ft	6ft
MAX. DUCT LENGTH	Per Cold Duct Hose	40 ft	40 ft	40 ft
	Hot Duct Hose	60 ft	100 ft	100 ft

**Specifications information shown with 230 V. All specifications subject to change without notice. All models come with a standard warranty covering theentire unit and compressor for 12 months. Visit MovinCool.com/warranty for details on MovinCool's industry-best free Extended Warranty Program which includes three (3) years for both parts and labor on portable units.*

KÜHL® FEATURES

FRIEDRICH

Comfort

- Convenient control from your smartphone or computer via FriedrichLink™ (required accessory sold separately)
- 24-hour timer
- Up to 4 cooling and 4 fan-only speeds on select models
- Automatic fan speed adjustment
- Auto-changeover from cool to heat; heat to cool to maintain set temperature (Kuhl+ models except EQ08)
- 8-way air flow control
- Temperature readout can display set temperature and room temperature
- LCD panel auto dims if not in use
- LCD settings lockout option (ON/OFF)
- Premium remote control allows user to activate schedule, adjust temperature, adjust fan speed or select auto-fan; can also switch from cool to heat and heat to cool (Kühl + models)

Maintenance & Installation

- Check filter reminder and error code storage
- Same sleeve dimensions for 30+ years for easy replacement
- Slideout chassis for more permanent installation and easier access for maintenance
- Installs in a window or in-wall
- Heavy-duty installation hardware lasts longer and provides a superior barrier from the outside elements (optional accessory on Kühl+ models)
- Rugged hardboard side panels or (heavy duty side curtains on SQ and EQ models) for a more permanent installation
- Power cord can run either left or right
- Firm grip handles for easier chassis installation and removal
- Front cover attaches easily and securely. Nut driver included**

Durability

- Sealed control panel for protection from dust, moisture and contaminants
- Control module is separate from touch controls for better protection from the elements, abusive handling or accidental damage and to minimize repair costs
- Robust 20 gauge steel cabinet
- Solid-sleeve top keeps out falling debris*
- Solid-steel blower housing offers enhanced protection
- Totally enclosed commercial grade fan motor runs at a lower temperature to prevent overheating and is double-mounted for added stability and reduced wear
- Durable base pans and steel inner walls
- Unit's structural integrity allows it to be removed, cleaned and maintained outside of its sleeve
- Aluminum end plates will not contribute to rust-stained building exteriors
- Scratch-resistant cabinet
- High-tech aluminum fins with rifled copper tubing are more efficient and less prone to corrosion
- Defrost control protects coil against freeze up

Sound Reduction Technology

- Steel inner wall and extra dense insulation materials block outdoor noise
- Vibration isolating design and components diminish traditional operating sound levels
- Precision engineering maximizes air flow while delivering ultra quiet operation

Energy Management & Compliance

- 2 ready-to-go 7-day energy management programs*
- Autofan mode saves money by conserving energy
- ENERGY STAR® qualified models, including heat pumps
- 24V low voltage interface
- Environmentally-friendly R-410A refrigerant used in all models
- Recyclable packaging
- RoHS compliant

Safety & Security

- EntryGard™ anti-intrusion protection - secures chassis to the sleeve with a steel retaining wire to deter 'kick-in' intrusion
- Power cord current leakage protected
- Aluminum rear grille protects the outdoor coil from damaging debris and vandalism
- Insect barrier*

Health & IAQ

- Superior fresh air intake and stale air exhaust vent*
- Washable, antimicrobial air filter
- Optional premium carbon filter provides superior air filtration with ratings as high as MERV 6, while also adsorbing odors, and reducing ozone and VOCs when used in conjunction with standard filter
- Hinged door for easy filter access











* Feature not available on Kühl SQ and EQ models. **Nut driver not required for Kühl SQ and EQ models.

HAZARDOUS LOCATION ROOM A/C

FRIEDRICH



Hazardgard meets T4 temperature classification

- Unit surface temperatures will not rise above 135° C/275° F.
  NOTE: 50/60Hz model listed as T4A for surface temperatures to 120° C/248° F.
- Operates at low ambient conditions without freezing at outdoor ambient temperatures as low as 7° C/45° F.
- Tolerates higher outdoor temperatures up to 55° C /130° F.

Specifically designed to cool living quarters, storage areas and other enclosures situated in hazardous locations; where specific volatile flammable liquids or gases are handled or used within enclosed containers or systems.

Features

- Permanent split capacitor motor
- Hermetically sealed reciprocating compressor is cooled during the refrigeration cycle, which allows the unit to tolerate higher outdoor temperatures up to 130˚ F (55°C)
- Environmentally sealed on/off switch and gold plated contacts in thermostat for corrosion resistance
- Solid-state control relays for compressor and fan operation
- Hot gas bypass allows the air conditioner to operate at low ambient conditions without freezing at outdoor temperatures as low as 45° F (7°C)
- Larger, commercial grade, enclosed fan motor with hermetically sealed overload for arc-free operation. Totally enclosed to assure efficient operation under adverse electrical conditions
- Unit utilizes field supplied, direct-wired circuit
- 22-gauge, G60 steel air conditioner cabinet is powder coated for corrosion protection and to withstand years of hard use
- High density EPS foam insulation for thermal resistance and sound control
- Heavy duty, honeycomb matrix packaging resists damage during shipment and is environmentally friendly

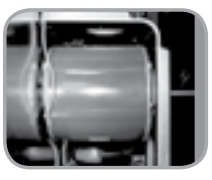

Coils coated for corrosion resistance

MODEL SH24N20

ElectroFin® 5-stage, immersion ecoat process on 100% of metallic surfaces on the outdoor coil provides outstanding corrosion resistance protection in coastal or corrosive environments

ELECTROFIN BENEFITS:

- Excellent adhesion characteristics
- Less than 1% thermal degradation
- Outstanding chemical resistance
- Passed 6048 hrs.ASTM B-117 Salt Spray

5-STAGE **ecoat**
Corrosion Protection



ELECTROFIN MEETS THE FOLLOWING:

- MIL-C-46168 Chemical Agent Resistance *-DS2, HCl Gas*
- CID A-A-52474A (GSA)
- MIL-STD 810F, Method 509.4 (Sand and Dust)
- MIL-P-53084 (ME)-TACOM Approval
- MIL-DTL-12468 Decontamination Agent (STB)
- DPG (Douglas Proving Grounds) Soil & Water Exposure Tests
- GM9540P-97 Accelerated Corrosion Test (120 cycles)
- ASTM B117-G85 Modified Salt Spray (Fog) Testing-2,000 hours
- ASTM B117 Salt Spray (tested by ARL for Lockheed Martin)

MODELS SH15M30A, SH20M30B, SH20N50

Diamonblue Advanced Corrosion Protection® on the outdoor coil protects the coil against deterioration and extends the life of the unit especially in coastal or corrosive environments.

DIAMONBLUE
Advanced Corrosion Protection®



HAZARDOUS LOCATION ROOM A/C

FRIEDRICH

SPECIFICATIONS

Model	Cooling Capacity Btu/Hr.	Electrical Characteristics: Volts Rated	Cooling Amps	Cooling Watts	Circuit Rating Breaker or T - D Fuse Volts - Amps	Energy Efficiency Ratio EER	Moisture Removal Pints/ Hr	Air Circulation CFM	Refrigerant	LIST
	60 HERTZ									
SH15M30A	14500/14000	230/208	6.9/7.5	1495/1443	250V-15	9.7/9.7	4.0	375	R-410A	$11,941.00
SH20M30B	19000/19000	230/208	8.5/9.4	1965/1970	250V-15 (230V) / 250V-20 (208V)	9.7/9.6	5.5	375	R-410A	$13,845.00
SH24N20	24000/23700	230/208	12.6/13.5	2727/2788	250V-20	8.8/8.5	8.0/7.5	385	R-410A	
	50 HERTZ									
SH20M50A	19500/19100	240/220	9.8/10.3	2167/2156	250V-20	9.0/9.0	5.6/5.5	425	R-410A	
SH24N20	21000/20500	240/220	15.0/13.2	2600/2412	250V-20	8.1/8.5	7.0/7.0	360	R-410A	

INSTALLATION INFORMATION

Model	Dimensions Inches: Height	Width	Depth with Front (A)	Depth J Box to Louvers (B)	Minimum Extension Into Room	Minimum Extension Outside	Window Width Inches: Min.	Max.	In-Wall Installation Finished Hole Inches: Height	Width	Max. Depth (C)	Weight Lbs.: Net	Shipping
SH15M30A	15 15/16"	25 15/16"	27 3/8"	6"	3 1/16"	16 15/16"	27 7/8"	42"	16 3/16"	26 3/16"	6"	140	167
SH20M30B	17 15/16"	25 15/16"	27 3/8"	6"	3 1/16"	16 15/16"	27 7/8"	42"	18 3/16"	26 3/16"	6"	166	170
SH20M50A	17 15/16"	25 15/16"	27 3/8"	6"	3 1/16"	16 15/16"	27 7/8"	42"	18 3/16"	26 3/16"	6"	171	175
SH24N20	17 15/16"	25 15/16"	27 3/8"	6"	3 1/16"	16 15/16"	27 7/8"	42"	18 3/16"	26 3/16"	6"	180	185

Due to continuing engineering research and technology, specifications are supbject to change wihtout notice.

U.S. MAXIMUM outdoor ambient operating temperature is 130ºF. (55ºC) MAXIMUM TEMPERATURE RATING FOR CLASS 1, DIVISION 2, GROUPS A, B, C, D.

Capacity and efficiency values at each climate conditions are available upon request.

NOTE: Hazardgard unit must be hard-wired.

Manufactured under Design Patent DES 368, 306 decorative front; Utility Patent 5, 662, 058.

Sleeve Dimensions Drawing

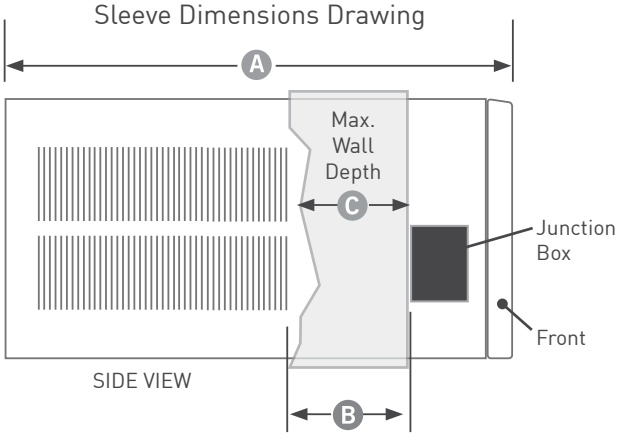

c UL us
LISTED

THRU-THE-WALL ROOM A/C

FRIEDRICH

NEW WallMaster®

COMMERCIAL GRADE

A perfect fit in Friedrich and Fedders A & B 27" sleeves

FITS SLEEVES
16 3/4" HIGH X 27" WIDE





Select MODE, FAN SPEED, MONEY SAVER®, adjust TEMPERATURE and set the TIMER.

Comfort & Convenience

- New design makes controls more accessible
- Remote control
- 24-hour timer
- Smart Fan auto-adjusts fan speed to maintain desired temperature
- Check filter reminder
- 3-speed fan
- Auto restart
- Electronic defrost control
- Individually adjustable air louvers
- Washable, antimicrobial filter

Energy Management

- Money Saver® setting cycles the fan with the compressor
- ENERGY STAR® qualified models
- R-410A refrigerant

Durability & Quality

- Rotary compressor provides quiet, dependable performance
- Premium aluminum exterior grille
- Dense blower insulation blocks outdoor noise
- Rifled copper tubing
- Impact resistant front cover
- High tech fins with sine wave lanced louvers increase energy efficiency by increasing surface area for heat exchange

Installation Features

- Mounts flush with the exterior wall for a neat appearance
- Ideal for thicker wall installations, where side fins don't fit
- Firm grip handles on the chassis for easy installation and removal from wall sleeve
- Adjustable louvers direct the air flow where you need it
- A direct replacement for 27" sleeves including Fedders A and B*. Sleeve measures 27" W x 16 3/4" H

Safety & Security

- EntryGard™ anti-intrusion protection secures chassis to sleeve to deter 'kick-in' intrusion
- Power cord current leakage protected
- Insect barrier

Accessories

- AG architectural grille for use with WSE sleeve
- Baffle adapter kit for use with deep sleeve installations
- Drain kit for condensate disposal
- Internal drain kit for new construction applications where condensate drain system is built-in

WSE SLEEVE ships with inside and outside weather panel and standard grille

ADJUSTABLE LOUVERS



FITS EXISTING FEDDERS SLEEVES.

Sleeve Dimensions	Friedrich WSE Sleeve	Fedders A Sleeve	Fedders B Sleeve
Height (inches)	16 3/4	16 3/4	16 3/4
Width (inches)	27	27	27
Depth (inches)	16 3/4	16 3/4	19 3/4

Chassis requires WSE sleeve (sold and shipped separately)

*Installation in Fedders B sleeve requires a baffle adapter kit-BAK.

THRU-THE-WALL ROOM A/C

FRIEDRICH

UNI-FIT®

UNIVERSAL FIT THRU-THE-WALL FOR EASY REPLACEMENT IN EXISTING 24 1/2″, 26” OR 27” SLEEVES.

Residential grade quality for installation in new construction, retrofits and remodels.

Uni-Fit®
8000-13000 Btu
Up to 9.6 EER

Uni-Fit®
Electric Heat
COOLING
8000-11500 Btu
Up to 9.4 EER
ELECTRIC HEAT
3850-11200 Btu



UNI-FIT® FEATURES

Comfort & Convenience

- 6-way air flow control
- Remote control
- 24-hour programmable timer
- 3-speed fan
- Auto restart
- Defrost control

Energy Management and Compliance

- Money Saver® setting saves money by conserving energy
- Five Energy Star models
- R32, R-410A refrigerant

Durability & Quality

- Rotary compressors provide quiet, dependable performance
- Seacoast protection for corrosion resistance in harsh environments

Installation and Maintenance Features

- Universal fit trim ring
- Sleeve designed to fit a standard 26" opening and sleeves as small as 24 ½"

Accessories

- USc sleeve ships with expanded aluminum grille
- Replacement grille ships with US/UE chassis for use in existing sleeves when a grille is needed

Health and IAQ

- Washable antimicrobial filter
- Stale air exhaust



Select MODE, FAN SPEED, adjust TEMPERATURE and set the TIMER.

Uni-Fit® installs in many existing sleeves.

Sleeve Dimensions	Friedrich USC Sleeve	Amana	Carrier (51S Series)	Fedders/ Emerson/ Friedrich WSD	Emer-son/ Fedders	GE/ Hot-point	Whirlpool	White-Westinghouse/ Frigidaire/ Carrier (52F Series)
Height (inches)	15 1/2	15 5/8	16 7/8	16 3/4	15 3/4	15 5/8	16 1/2	15 1/4
Width (inches)	25 7/8	26	25 3/4	27	26 3/4	26	25 7/8	25 1/2
Depth (inches)	16 3/4	16 7/8	18 5/8	16 3/4 or 19 3/4	15	16 7/8	17 1/8 or 23	16, 17 1/2 or 22

NOTE: Chassis requires US sleeve for new installations (sold and shipped separately)

RECYCLABLE PACKAGING

R-410A
OZONE FRIENDLY REFRIGERANT

THRU-THE-WALL ROOM A/C

Optional Accessories

WallMaster® WSE Sleeve Exterior Grilles



Standard Grille
Premium, stamped steel grille with powder coat paint. Ships with WSE sleeve. Galvanized steel inner and outer weather panels also ship with sleeve.



Optional Architectural Grille- AG
Premium brushed aluminum grille.

IMPORTANT:
Operating the air conditioner with incorrect rear grille or without Baffle Adapter Kit (on 19 3/4" deep sleeve) will recirculate discharge air and cause compressor overload to trip.

CORRECT Vertical Louvers

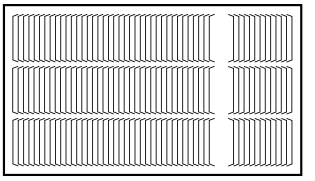

INCORRECT Horizontal Louvers

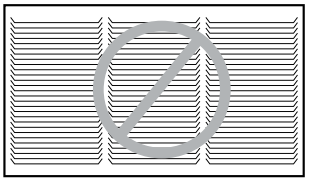

Installation Accessories

DK / Drain Kit
Installed at the back of the unit and allows for attachment to condensate disposal system, if necessary or desired.



IDK / Internal Drain Kit
New construction applications where a condensate drain system has been built into the wall interior.



BAK / Baffle Adapter Kit
Necessary when installing in a sleeve deeper than 16 3/4" deep, such as Fedders B sleeve (19 3/4" deep).



CHASSIS DIMENSIONS

	Height	Width	Depth	Height of Front	Width of Front	Depth with Front	Minimum Extension Into Room with Front
Chassis	15 3/4"	26 1/2"	21"	17 1/4"	27 1/2"	23 1/4"	7 1/2"

WSE SLEEVE DIMENSIONS

Model	Height	Width	Depth	Depth with Front	Minimum Extension Outside	Thru-the-wall Finished Hole Height	Thru-the-wall Finished Hole Width	Thru-the-wall Finished Hole Max. Depth	LIST
WSE Sleeve	16 3/4"	27"	16 3/4"	24 1/4"	9/16"	17 1/4"	27 1/4"	15 5/16"	$532.00

Uni-Fit® USC Sleeve Exterior Grilles



STANDARD GRILLE

Ships with USC sleeve
Expanded aluminum grille designed for use with USC sleeve.



REPLACEMENT GRILLE

Ships with US/UE chassis. Black plastic for use on existing sleeves without any grille.



ARCHITECTURAL GRILLE-UXAA

Optional brushed aluminum grille.

IMPORTANT:
When installing into an existing sleeve, consult Installation Section of your Installation/Operation Manual to determine whether or not the grille needs to be replaced and/or a baffle adapter (included with chassis) should be used.

SLEEVE/CHASSIS DIMENSIONS

Model	Height	Width	Depth	Depth with Front	Minimum Extension Into Room	Minimum Extension Outside	Thru-the-wall Finished Hole Height	Thru-the-wall Finished Hole Width	Thru-the-wall Finished Hole Max. Depth	LIST
Uni-Fit®										
USC Sleeve	15 1/2"	25 7/8"	16 3/4"	20 1/2"	–	1/2"	15 3/4"	26 1/8"	16 1/4"	$545.00

IMPORTANT:
US chassis w/front fully installed into USC sleeve extends into the room 3 3/8". UE chassis w/front fully installed into USC sleeve extends into the room 2 7/8". 1" gap on sides and 1/2" gap at top can be covered by two-piece trim ring that fits over the chassis front.

Ⓐ Front extension into room
US= 3 3/8"
UE= 2 7/8"

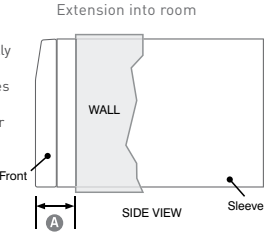

PACKAGE TERMINAL AIR CONDITIONERS

FRIEDRICH

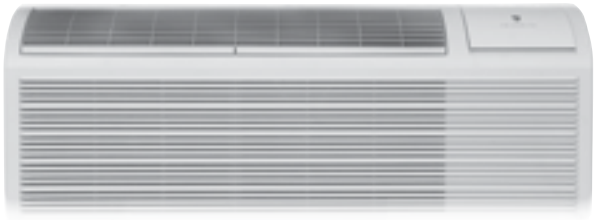

NEW DESIGN FOR HIGER ENERGY EFFICIENCY

ULTRA QUIET PERFORMANCE / EXCLUSIVE 3 SPEED FAN / UNIVERSAL HEATER

NEW TWO MOTOR DESIGN

With separate indoor and outdoor motors, the indoor motor can run at slower speeds which reduces sound levels indoors.

NEW TANGENTIAL BLOWER WHEEL

Tangential blower wheel has nearly 5x the surface area of a typical fan used on other PTACS. The result is more uniform airflow over a wider path for faster, more even air distribution throughout the room and improved sound levels.

Air is blown over the entire length of the tangential wheel into the room in a uniform laminar airflow.



TANGENTIAL BLOWER WHEEL PROVIDES UNIFORM LAMINAR AIRFLOW OVER A WIDE PATH FOR FASTER, MORE EVEN AIR DISTRIBUTION THROUGHOUT THE ROOM WITH IMPROVED SOUND LEVELS.

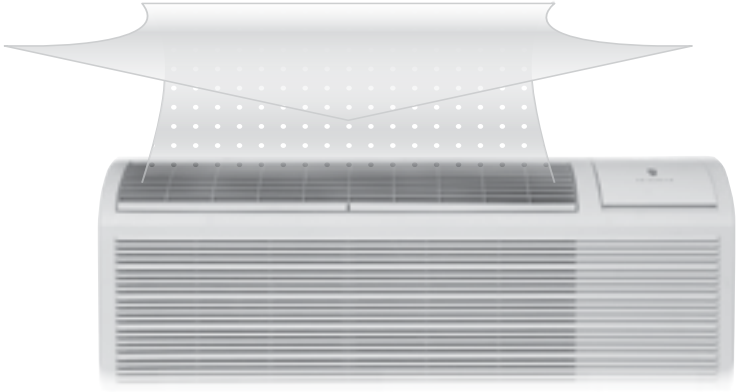

UNIQUE 3 SPEED FAN

Friedrich is the only major PTAC brand with 3 fan speeds in cooling and heating mode.

Soft start/stop fan delay feature reduces transitional noise that is usually associated with compressor start-up.



DIGITAL CONTROLS WITH UNIQUE 3 SPEED FAN

UNIVERSAL HEATER / POWER CORD

All PTAC units ship complete with the standard power cord for that model (7K,9K and 12K = 3.0 kW and 15K = 5.0 kW). If you want to adjust the heater size on any PTAC unit simply unplug the attached power cord and connect the desired size. It is important to ensure that all wiring and building connections are sized properly for the power cord as well.

Universal heater allows installers to change the heat output of the PTAC by changing the power cord, simplifying ordering and installation.

For distributors, this means stocking one PTAC model and the 2 optional cords in place of 3 separate PTACs.

POWER CORD IS AS EASY TO CONNECT AS A PHONE JACK

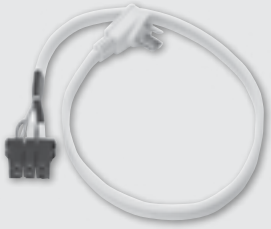

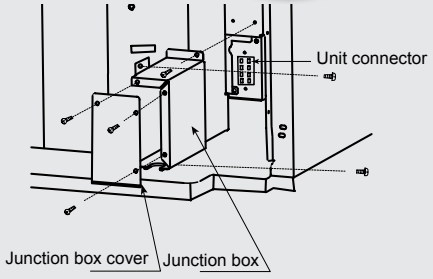

PACKAGE TERMINAL AIR CONDITIONERS

FRIEDRICH

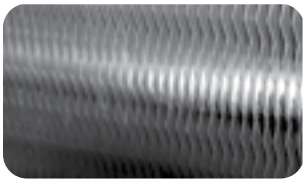

DIAMONBLUE ADVANCED CORROSION PROTECTION

Treatment protects the outdoor coil against deterioration and extends the life of the unit especially in harsh coastal environments.

Room Comfort Features

Constant room comfort monitoring

"Instant Heat" heat pump mode quickly heats a room to the desired temperature for increased comfort

Even heat monitoring checks room temperature and automatically adds heat boost if necessary

Quiet, efficient rotary compressor mounted with vibration isolators to keep the compressor running smoothly and quietly.

The digital control panel will automatically run the fan to briefly sample the room temperature every nine minutes to ensure desired conditions are maintained

Durability Features

Durable front panel with break proof control door and design

Room freeze protection- heat initiated if temperature falls to 40°F in an unoccupied room, raising temperature to 46°F

Tamper-resistant grille

Dual motors for quiet operation

Durable, powder coat paint finish

Indoor coil frost sensor protects the compressor to lengthen the life of the unit.

Random compressor restart protects electrical systems from overload when power is restored

2 YR.
WARRANTY
PARTS AND LABOR

5 YR.
LIMITED WARRANTY

See warranty documentation for full details.

Energy Management Features

New line has improved energy efficiency ratings for increased energy savings

Owners and operators will appreciate the flexibility to set separate heat and cool range limits

Desk control ready allowing hotel owners to control units from a central location

Electronic defrost control ensures more run time in the efficient heat pump mode

Installation Features

Universal heaters with heat capacities determined by the power cord used with the unit; achieve up to 64 PTAC SKUs with 16 units by changing the power cord size

Indoor Air Quality

Fresh air damper control to bring in fresh outside air when desired

Washable, antimicrobial air filter

Maintenance Features

Service error code memory storage facilitates improved unit diagnostics.

Emergency heat override ensures heat mode operation even in the unlikely event of compressor failure

Maintenance friendly design means easy access to components for cleaning and repairs including lift-out air filters

FITS OTHER PTAC SLEEVES WITHOUT THE ADDED EXPENSE OF A BAFFLE KIT.

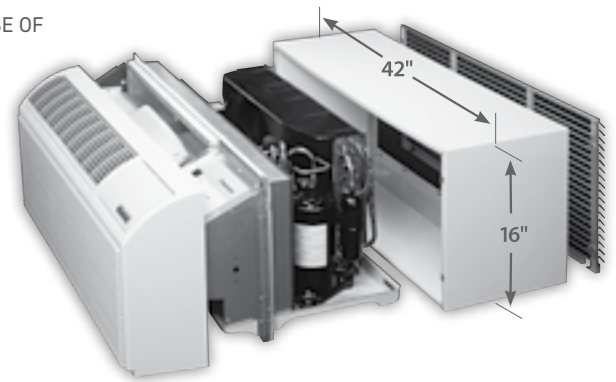

RECEPTACLES AND FUSE TYPES						
Voltage	230V			265V		
Amps	15	20	30	15	20	30
Heater Size	2.5 kW	3.5 kW	5.0 kW	2.5 kW	3.5 kW	5.0 kW
Receptacles						
NEMA# Receptacle	6-15R	6-20R	6-30R	7-15R	7-20R	7-30R
NEMA# Plug	6-15P	6-20P	6-30P	7-15P	7-20P	7-30P

IMPORTANT NOTE: SLEEVES ARE SOLD AND SHIPPED SEPARATELY TO ACCOMMODATE NEW CONSTRUCTION AND REPLACEMENT REQUIREMENTS.

PACKAGE TERMINAL AIR CONDITIONERS

SPECIFICATIONS

FRIEDRICH

PTAC Electric Heat models

	PDE07K		PDE09K		PDE12K		PDE15K	
PERFORMANCE DATA:								
Cooling Btu	7200/7000		9400/9200		11800/11600		14500/14200	
Cooling Watts	550/535		775/760		1015/1000		1390/1365	
Energy Efficiency Ratio, EER	13.0/13.0		12.1/12.1		11.6/11.6		10.4/10.4	
Moisture Removal (pints/hr)	1.7		2.1		2.7		3.1	
Sensible Heat Ratio	0.86		0.85		0.75		0.67	
ELECTRICAL DATA:								
Voltage (1 PHASE, 60 Hz)	230/208		230/208		230/208		230/208	
Volt Range	253-187		253-187		253-187		253-187	
Current (Amps)	2.7/2.9		3.7/3.9		4.9/5.1		6.2/6.7	
Power factor	0.97		0.97		0.97		0.97	
Compressor LRA	13.0		19.5		21.5		28.9	
Compressor RLA	2.5		3.5		4.7		5.9	
Outdoor Fan Motor, HP	0.080		0.080		0.086		0.086	
AIRFLOW DATA:								
Indoor CFM, HIGH	345/315		355/325		400/390		400/390	
Indoor CFM, LOW	270/255		300/275		325/310		325/310	
Vent CFM	75		75		75		75	
PHYSICAL DATA:								
Sleeve Dimensions (H x W x D)	16" x 42" x 13 3/4" (all models)							
Dimensions with Front (H x W x D)	16"x 42"x 21 1/2" (all models)							
Cut Out Dimensions (H x W x D)	16 1/4"x 42 1/4" (all models)							
Net Weight (lbs.)	106		115		119		121	
Shipping Weight (lbs.)	126		135		139		140	
R-410A CHARGE (oz)	23		24		36		36	
Dimensions with Packaging (inches)	17 7/8" x 45" x 25 1/4" (all models)							
LIST	$3,159.00		$3,233.00		$3,359.00		$3,577.00	

PTAC Heat Pump models

	PDH07K		PDH09K		PDH12K		PDH15K	
PERFORMANCE DATA:								
Cooling Btu	7200/7000		9400/9200		11800/11600		14500/14200	
Cooling Watts	550/535		775/760		1015/1000		1390/1365	
Energy Efficienct Ratio, EER	13.0/13.0		12.1/12.1		11.6/11.6		10.4/10.4	
Reverse Heating Btu	6000/5800		8300/8100		10600/10400		13300/13000	
Heating Watts	485/470		695/675		910/895		1255/1225	
COP	3.6/3.6		3.5/3.5		3.4/3.4		3.1/3.1	
Moisture Removal (pints/hr)	1.7		2.1		2.7		3.1	
SENSIBLE HEAT RATIO	0.86		0.85		0.75		0.67	
ELECTRICAL DATA:								
Voltage(1 PHASE, 60 Hz)	230/208		230/208		230/208		230/208	
Volt Range	253-187		253-187		253-187		253-187	
Current (Amps)	2.7/2.9		3.7/3.9		4.9/5.1		6.2/6.7	
Reverse Heat. Amps	2.4/2.6		3.4/3.2		4.2/4.7		6.2/6.7	
Power Factor	0.97		0.97		0.97		0.97	
Compressor LRA	13.0		19.5		21.5		28.9	
Compressor RLA	2.5		3.5		4.7		5.9	
Outdoor Fan Motor, HP	0.080		0.080		0.086		0.086	
AIRFLOW DATA:								
Indoor CFM, HIGH	345/315		355/325		400/390		400/390	
Indoor CFM, LOW	270/255		300/275		325/310		325/310	
VENT CFM	75		75		75		75	
PHYSICAL DATA:								
Sleeve Dimensions (H x W x D)	16" x 42" x 13 3/4" (all models)							
Dimensions with Front (H x W x D)	16"x 42"x 21 1/2" (all models)							
Cut Out Dimensions (H x W x D)	16 1/4"x 42 1/4" (all models)							
Net Weight (lbs.)	113		119		122		124	
Shipping Weight (lbs.)	133		139		141		144	
R-410A CHARGE (oz)	34		34		36		39	
Dimensions with Packaging (inches)	17 7/8" x 45" x 25 1/4" (all models)							
LIST	$3,224.00		$3,298.00		$3,424.00		$3,642.00	

Due to continuing research in new energy-saving technology, specifications are subject to change without notice.
Warranty limited to installations in the United States, Puerto Rico, Mexico and Canada only.
See warranty documentation for full details.

ULCDTP

PACKAGE TERMINAL AIR CONDITIONERS

OPTIONAL ACCESSORIES

WALL SLEEVE - PDXWSA

Galvanized steel is prepared in a state-of-the-art, multistep process for stronger paint adhesion, then powder coated with a polyester finish and cured in an oven for exceptional durability. The wall sleeve is insulated for thermal efficiency and noise reduction. 16" x 42" x 13 ¾"



LIST $427.00

STANDARD GRILLE - PXGA

Standard, stamped, anodized aluminum to resist chalking and oxidation.



LIST $183.00

DEEP WALL SLEEVE

PDXWS EXT

One piece extended wall sleeve for walls 13 ¼" -25 1/2" deep are available by special order



LIST -

DIGITAL REMOTE THERMOSTATS

RT6 Single stage cool, single stage heat for PDE models or single stage cool, dual stage heat for PDH model thermostat features high/low fan speed switch.

WRT1 Wireless, single stage, wall-mounted digital thermostat with two fan speeds. Features backlit display and multiple confguration modes.



RT6

LIST -



WRT1

LIST

REMOTE THERMOSTAT ESCUTCHEON KIT

PDXRTA

Kit contains ten escutcheons that can be placed over the factory control buttons when a remote wall mounted thermostat is used. The escutcheon directs the user to the wall thermostat for operation and retains the LED window to display error codes and diagnostic information.



LIST $270.10

PXFTA

10 pack of antimicrobial air filters



LIST $63.60

FRIEDRICHLINK® ENERGY MANAGEMENT THERMOSTATS

EMRT1
Wired thermostat with occupancy sensor.
EMWRT1
Wireless thermostat with occupancy sensor.
EMOCT -
Online connection kit.
EMRAF $510.00
Remote access fee.



EMRT1, EMWRT1



EMOCT

CONDUIT KIT WITH JUNCTION BOX

PXCJA

Hard wire conduit kit with junction box for 208/230V and 265V units (subbase not required). Kit includes a means of quick disconnect for easy removal of the chassis.

*Required for 265V installations.



LIST $174.30

SLEEVE EXTENSION RETROFIT KIT

PXSE

2 ¼" sleeve extension attached to the room side of the sleeve to allow for the installation of a PD-series Friedrich PTAC in a 11 ½" deep T-series sleeve.



LIST $222.20

ARCHITECTURAL GRILLES

Architectural grilles that consist of heavy gauge 6063-T5 aluminum alloy

PXAA	Clear extruded aluminum.	$375.00
PXSC	Available in custom colors.	$497.00



PXAA

DECORATIVE SUBBASE (black)

PXSBA

Provides unit support for walls less than six inches thick. Includes leveling legs, side filler panels and mounting brackets for electrical accessories. Accepts circuit breaker, power disconnect switch and conduit kit.



LIST $287.60

ELECTRICAL SUBBASE

Provides unit support for walls less than six inches thick. Includes leveling legs, side fller panels, mounting brackets, a plug-in receptacle and field-wiring access. The subbase also includes electrical knockouts for a power disconnect switch or circuit breaker.
(Please contact your local branch for more details)



CONDENSATE DRAIN KIT

PXDR10

Attaches to the bottom of the wall sleeve for internal draining of condensate or to the rear wall sleeve flange for external draining. Recommended for all units to remove excess condensate.



LIST $55.80

LATERAL DUCT ADAPTER

PDXDAA

Attaches to the Friedrich PTAC/PTHP unit to direct up to 35% of the total airfow to a second room. it includes duct plenum, front grille, 47" duct xtension, duct discharge grille, duct end cap and all necessary mounting hardware.

LIST $1,459.00

LATERAL DUCT EXTENSION

PDXDEA

Additional 3.5" H x 7" W x 47" L plenum for use with the LATERAL DUCT ADAPTER.



PDXDAA and PDXDEA ship together

POWER CORDS

PART	DESCRIPTION	LIST
PXPC23015A	LCDI 230V 15A Cord - 2.5 kW	$213.50
PXPC23020A	LCDI 230V 20A Cord - 3 kW	$213.50
PXPC23030	LCDI 230V 30A Cord - 5.0 kW	$105.60
PXPC26515A	Non-LCDI 265V 15A Cord - 2.5 kW	$213.50

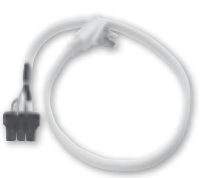

SINGLE PACKAGE VERTICAL A/C & H/P

FRIEDRICH

Vert-I-Pak®
A simply better way to heat & cool multiple rooms.

Ideal for extended stay properties, suites, assisted living facilities, student housing and commercial spaces

COMMERCIAL GRADE



Condition multiple rooms

A single VERT-I-PAK unit may be ducted for flexible zone cooling in multiple rooms.

Quieter than exposed cooling options

Because the VERT-I-PAK installs in a typical mechanical closet, units are quieter than other in-room air conditioning options. Even quieter operating sound levels may be achieved by insulating the closet.

Premium features and advantages

- Easy to install
- Higher efficiencies
- Quieter operation
- Certified by AHRI
- Diamonblue Advanced Corrosion Protection® standard on the coil

Typical Vert-I-Pak® installation.

VERT-I-PAK®

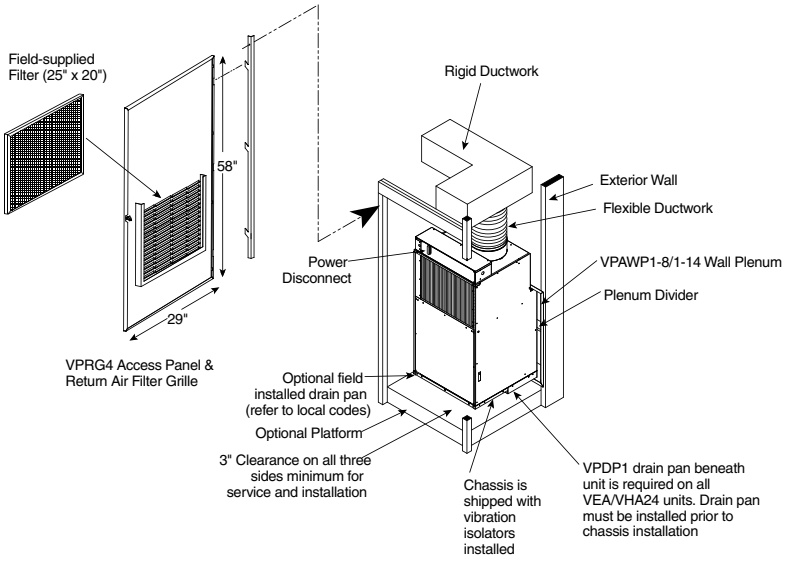

Optional accessories



ARCHITECTURAL LOUVER

VPAL2 and VPSC2

Extruded aluminum grille that attaches to the outdoor section of the wall plenum. Takes in fresh air and returns condensed air. VPSC2 can be ordered in custom colors

DIMENSIONS:
25 9/16" W x 31 1/16" H

Part #	LIST
VPAL2	$671.00
VPSC2	$819.00



RETURN AIR GRILLE/ACCESS PANEl

VPRG4: Hinged panel allows access to unit and return air flter. A feld-supplied flter (25" x 20") should be mounted on the inside grille. Panel can be mounted with return air openings high or low on the doc for optimum sound attenuation.

LIST
$1,002.00

DIMENSIONS: 29" W x 58" H
CUTOUT DIMENSIONS: 27" W x 55 3/4" H



WALL PLENUM

VPAWP1-8, VPAWP1-14

Two-part sleeve that telescopes in and out. Sits inside the exterior wall penetration.
VPAWP1-8 telescopes from 5 1/2"–8"
VPAWP1-14 telescopes from 8"–14"
DIMENSIONS: 24 1/8" W x 30 3/8" H
CUTOUT DIMENSIONS:
24 5/8" W x 30 7/8" H

Part #	LIST
VPAWP1-8	$775.00
VPAWP1-14	$924.00



FIRST COMPANY SLEEVE ADAPTER

VPASA1: Single piece, welded adapter allows retroft into existing First Company SPXR-series single package vertical unit wall sleeve and louver.

LIST
$1,107.00



SINGLE STAGE THERMOSTAT

RT6: Wired, single stage, wall-mounted digital thermostat with two fan speeds and backlight.

LIST
-



WRT1: Wireless, single stage, wall-mounted digital thermostat with two fan speeds and backlight.

LIST



ENERGY MANAGEMENT THERMOSTATS

EMRT1: Wired thermostat with occupancy sensor.

LIST

EMWRT1: Wireless thermostat with occupancy sensor.

LIST



DRAIN PAN

VPDP1: For VEA/VHA24 models. May be installed prior to chassis for easy installation/removal.

LIST
$296.30

SINGLE PACKAGE VERTICAL A/C & H/P

FRIEDRICH

SPECIFICATIONS

MODEL	VEA09K	VEA12K	VEA18K	VEA24K	VHA09K	VHA12K	VHA18K	VHA24K
COOLING DATA								
COOLING BTU	9100/8900	12200/11900	17000/16500	23000/22700	9050/8900	12000/11700	17000/16800	23000/22800
POWER (W)	849/815	1154/1135	1889/1833	2421/2389	855/845	1186/1155	1886/1846	2527/2505
EER	10.7/10.7	10.6/10.6	9.0/9.0	9.5/9.5	10.7/10.7	10.3/10.3	9.1/9.1	9.1/9.1
SENSIBLE HEAT RATIO	0.74	0.74	0.70	0.70	0.74	0.74	0.70	0.70
HEATER SIZE	2.5/3.4/5.0	2.5/3.4/5.0	2.5/3.4/5.0	2.5/3.4/5.0/7.5/10.0	2.5/3.4/5.0	2.5/3.4/5.0	2.5/3.4/5.0	2.5/3.4/5.0/7.5/10.0
HEAT PUMP DATA								
HEATING BTU	—	—	—	—	8600/8400	11000/10800	16000/15000	20000/20000
COP @ 47F	—	—	—	—	3.0/3.0	3.0/3.0	3.0/3.0	3.0/3.0
HEATING POWER (W)	—	—	—	—	801/799	1055/1035	1560/1540	1953/1953
HEATING CURRENT (A)	—	—	—	—	3.5/3.9	4.5/4.7	7.5/8.2	8.5/9.4
ELECTRICAL DATA								
VOLTAGE (1 PHASE, 60 HZ)	230/208	230/208	230/208	230/208	230/208	230/208	230/208	230/208
VOLT RANGE	253-197	253-197	253-197	253-197	253-197	253-197	253-197	253-197
COOLING CURRENT (A)	3.8/4.1	5.1/5.3	8.1/8.6	10.0/10.4	3.8/3.9	4.5/4.7	8.2/8.6	10.6/10.9
AMPS L.R	21.0	29.5	42.0	46.0	21.0	30.0	42.0	46.0
AMPS F.L.	3.5	4.7	7.8	9.5	3.5	4.8	7.8	9.5
INDOOR MOTOR (HP)	1/4	1/4	1/4	1/4	1/4	1/4	1/4	1/4
INDOOR MOTOR (A)	1.2	1.2	1.2	1.94	1.2	1.2	1.2	1.94
OUTDOOR MOTOR (HP)	—	—	—	1/4	—	—	—	1/4
OUTDOOR MOTOR (A)	—	—	—	0.85	—	—	—	0.85
PHYSICAL								
DIMENSIONS (W X D X H)	23"X23"X32"	23"X23"X32"	23"X23"X32"	23"X23"X47"	23"X23"X32"	23"X23"X32"	23"X23"X32"	23"X23"X47"
NET WEIGHT (LBS)	114	124	144	167	114	125	144	167
SHIPPING WEIGHT (LBS)	125	135	155	220	125	136	155	220
TEST SETTING	LOW	LOW	HIGH	LOW	LOW	LOW	HIGH	LOW
R410A CHARGE (OZ)	41.5	45	48.1	65	38	39.5	48	65
AIRFLOW DATA								

INDOOR CFM*	LOW	HIGH	LOW	HIGH	LOW	HIGH	LOW	HIGH	LOW	HIGH	LOW	HIGH	LOW	HIGH	LOW	HIGH
.10" ESP	405	450	420	450	400	480	610	700	420	450	420	450	400	480	610	700
.15" ESP	375	420	405	425	375	465	585	670	405	425	405	425	375	465	585	670
.20" ESP	345	385	385	400	350	450	560	640	385	400	385	400	350	450	560	640
.25" ESP	325	365	355	375	330	390	535	610	355	375	355	375	330	390	535	610
.30" ESP	305	340	320	350	310	330	510	580	320	350	320	350	310	330	510	580

VENT CFM	60	60	60	60	60	60	60	60
LIST					**$4,388.00**	**$7,694.00**		

NOTES:

COOLING STANDARDS: 95°F DB/75°F WB OUTDOOR, 80°F DB/67°F WB INDOOR
HEATING STANDARDS: 47°F DB/43°F WB OUTDOOR, 70°F DB/60°F WB INDOOR
NORMAL VALUE WET COIL @ .1" ESP.
RATED CFM AT LOW SPEED: VEA09/VHA09….325 VHA12/VEA12….390
VEA18/VHA18….400 VEA24/VHA24….610

DUE TO CONTINUING RESEARCH IN NEW ENERGY-SAVING TECHNOLOGY, SPECIFICATIONS ARE SUBJECT TO CHANGE WITHOUT NOTICE.

ULCDTP

DAIKIN 17 SERIES

Wall-Mounted Cooling Only (17 SEER | Up to 11 EER)





Model	Indoor Unit		FTKB09AXVJU	FTKB12AXVJU	FTKB18AXVJU	FTKB24AXVJU
	Outdoor Unit		RKB09AXVJU	RKB12AXVJU	RKB18AXVJU	RKB24AXVJU
Capacity Rated		Btu/h	8,800	11,000	18,000	21,200
(Min. ~ Max.)			4,400 - 12,000	4,400 - 13,000	4,300 - 21,200	6,000 - 22,200
Moisture Removal		gal/h	—	—	—	—
EER Rated			11	8.5	10.5	11
SEER			17	17	17	17
Piping Connections	Liquid	in. (mm)	Ø 1/4 (Ø 6.4)			
	Gas		Ø 3/8 (Ø 9.5)		Ø 1/4 (Ø 6.35	Ø 5/8 (Ø 15.9)
	Drain		Ø 3/4 (Ø 19.0)			
Max. Interunit Piping Length		ft. (m)	65-5/8 (20)		98.4 (30)	
Max. Interunit Height Difference			32-13/16 (10)			
Chargeless			25 (7.6)			
Amount of Additional Charge of Refrigerant		oz/ft (g/m)	0.21 (20)			
Operating Range - Cooling		°F DB	50° – 115°F			
Indoor Unit			**FTKB09AXVJU**	**FTKB12AXVJU**	**FTKB18AXVJU**	**FTKB24AXVJU**
Airflow Rate	H	cfm (m³/min)	330 (9.3)	360 (10.2)	430 (12.2)	555 (15.7)
	M		272 (7.7)	282 (8.0)	374 (10.6)	486 (13.8)
	L		215 (6.1)	232 (6.6)	318 (9.0)	405 (11.5)
	SL		165 (4.7)	165 (4.7)	274 (7.8)	336 (9.5)
Fan	Speed	Steps	5 Steps, Quiet, Auto			
Air Direction Control			Horizontal, Downward			
Air Filter			Titanium Apatite			
Dimensions (H × W × D)		in. (mm)	11-11/16 × 35-1/16 × 8-1/4 (297 × 891 × 210)		12-5/8 × 46-1/8 × 9-1/2 (321 × 1172 × 241)	
Weight		lbs. (kg)	20 (9.1)		31 (14)	
Sound Pressure Level (H / M / L / SL)		dB(A)	42 / 35 / 30 /	42 / 35 / 32 / 22	40/ 37 / 35 / 32	47 / 44 / 41 / 37
Outdoor Unit			**RKB09AXVJU**	**RKB12AXVJU**	**RKB18AXVJU**	**RKB24AXVJU**
Compressor	Motor Output	W	–			
Refrigerant	Type		R-410A			
	Charge	lbs. (kg)	1-5/8 (0.74)	2-1/5 (1)	2-3/4 (1.3)	3-1/5 (1.5)
Airflow Rate	H	cfm (m³/min)	900 (25.5)	730 (20.7)	1690 (47.9)	1796 (50.9)
	SL		—	—	—	—
Dimensions (H × W × D)		in. (mm)	21-5/8 × 25-15/16 × 10-3/4 (549 × 659 × 273)		25-11/16 × 33-11/16 × 12-15/16 (652 × 856 × 329)	29-11/16 X 33-11/16 X 12-15/16 (754 x 856 x 329)
Weight		lbs. (kg)	53 (24)	57 (26)	82 (37)	97 (44)
Sound Pressure Level	H	dB(A)	46	48	53	52

Unit Combination		Power Supply				Compressor	OFM		IFM	
Indoor Unit	Outdoor Unit	Hz -	Voltage Range	MC	MOCP	RLA	W	FLA	W	FLA
FTKB09AXVJU	RKB09AXVJU	60 - 60 -	Min. 187 V Max. 253 V	7.0	15	6.75	41	0.19	18	0.20
FTKB12AXVJU	RKB12AXVJU	60 - 60 -	Min. 187 V Max. 253 V	7.7	15	7.5	41	0.19	18	0.20
FTKB18AXVJU	RKB18AXVJU	60 - 60 -	Min. 187 V Max. 253 V	13.2	20	13	61	0.5	40	0.24
FTKB24AXVJU	RKB24AXVJU	60 - 60 -	Min. 187 V Max. 253 V	13.2	20	13	61	0.5	40	0.24

DAIKIN 17 SERIES

Wall-Mounted Heat Pump (17 SEER | Up to 9 EER)





Model	Indoor Unit		FTXB09AXVJU		FTXB12AXVJU		FTXB18AXVJU		FTXB24AXVJU	
	Outdoor Unit		RXB09AXVJU		RXB12AXVJU		RXB18AXVJU		RXB24AXVJU	
			Cooling	Heating	Cooling	Heating	Cooling	Heating	Cooling	Heating
Capacity Rated		Btu/h	8,800	9,400	16,200	11,300	18,000	17,900	21,200	21,200
(Min. ~ Max.)			4,400 - 10,200	4,400 - 13,600	4,400 - 13,000	4,400 - 16,200	4,300 - 21,200	4,000 - 22,500	6,000 - 22,200	4,100 - 27,300
Moisture Removal		gal/h	—	—		—	—		—	—
COP Rated			3.6		3.3		3.3		3.7	
EER Rated			11		8.5		10.5		11	
SEER			17							
HSPF			9							
Piping Connections	Liq	in. (mm)	Ø 1/4 (Ø 6.4)							
	Gas		Ø 3/8 (Ø 9.5)				Ø 1/2 (Ø 12.7)		Ø 5/8 (Ø 15.9)	
	Drain		Ø 3/4 (Ø 19.0)							
Max. Interunit Piping Length		ft. (m)	65-5/8 (20)				98.4 (30)			
Max. Interunit Height			32-4/5							
Chargeless			25 (7.6)							
Amount of Additional Charge of Refrigerant		oz/ft (g/m)	0.21 (20)							
Operating Range - Cooling		°F DB	50° – 115°F							
Operating Range - Heating*		°F WB	5° – 65°F							
Indoor Unit			**FTXB09AXVJU**		**FTXB12AXVJU**		**FTXB18AXVJU**		**FTXB24AXVJU**	
Airflow Rate	H	cfm (m³/min)	330 (9.3)		360 (10.2)		430 (12.2)	435 (12.3)	555 (15.7)	580 (16.4)
	M		272 (7.7)		282 (8.0)		374 (10.6)		486 (13.8)	
	L		215 (6.1)		232 (6.6)		318 (9.0)		405 (11.5)	
	SL		165 (4.7)		165 (4.7)		274 (7.8)		336 (9.5)	
Fan	Spee	Steps	5 Steps, Quiet, Auto							
Air Direction Control			Horizontal, Downward							
Air Filter			Titanium Apatite							
Dimensions (H × W × D)		in. (mm)	11-11/16 × 35-1/16 × 8-1/4 (297 × 891 × 210)				12-5/8 × 46-1/8 × 9-1/2 (321 × 1172 × 241)			
Weight		lbs. (kg)	20 (9.1)				31 (14)			
Sound Pressure Level (H / M / L / SL)		dB(A)	42 / 35 / 30 / 23		42 / 35 / 30 / 22		40/ 37 / 35 / 32		47 / 44 / 41 / 37	
Outdoor Unit			**RXB09AXVJU**		**RXB12AXVJU**		**RXB18AXVJU**		**RXB24AXVJU**	
Compressor	Motor Outp	W	—							
Refrigerant	Type		R-410A							
	Charg	lbs. (kg)	1-5/8 (0.74)		2-1/5 (1)		2-3/4 (1.3)		3-1/5 (1.5)	
Airflow Rate	H	cfm (m³/min)	900 (25.5)		730 (20.7)		1690 (47.9)		1796 (50.9)	
	SL		—	—	—	—	—	—	—	—
Dimensions (H × W × D)		in. (mm)	21-5/8 × 25-15/16 × 10-3/4 (549 × 659 × 273)				25-11/16 × 33-11/16 × 12-15/16 (652 × 856 × 329)		29-11/16 x 33-11/16 x 12-15/16 (754 x 856 x 329)	
Weight		lbs. (kg)	53 (24)		57 (26)		82 (37)		97 (44)	
Sound Pressure Level	H	dB(A)	46		48		53		52	

*Applicable to heat pump models only, refer to installation manual for more details.

Unit Combination		Power Supply				Compressor	OFM		IFM	
Indoor Unit	Outdoor Unit	Hz - Volts	Voltage Range	MCA	MOC	RLA	W	FLA	W	FLA
FTXB09AXVJU	RXB09AXVJU	60 - 208 60 - 230	Min. 187 V Max. 253 V	6.65	15	6.75	41	0.19	18	0.2
FTXB12AXVJU	RXB12AXVJU	60 - 208 60 - 230	Min. 187 V Max. 253 V	7.95	15	7.75	41	0.19	18	0.2
FTXB18AXVJU	RXB18AXVJU	60 - 208 60 - 230	Min. 187 V Max. 253 V	16.20	20	16	61	0.5	40	0.24
FTXB24AXVJU	RXB24AXVJU	60 - 208 60 - 230	Min. 187 V Max. 253 V	16.20	20	16	61	0.5	40	0.24

DAIKIN 19 SERIES

Wall-Mounted Cooling Only (19 SEER | Up to 12.5 EER)



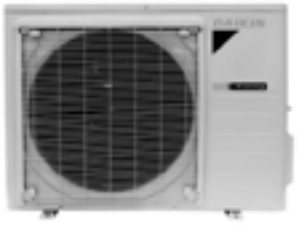

Model	Indoor Unit		FTK09AXVJU	FTK12AXVJU	FTK18AXVJU	FTK24AXVJU
	Outdoor Unit		RK09AXVJU	RK12AXVJU	RK18AXVJU	RK24AXVJ
Capacity Rated (Min. ~ Max.)		Btu/h	8,900 (4,400 ~ 10,200)	10,900 (4,400 ~ 13,300)	18,000 (5,500 ~ 20,000)	21,200 (5,500 ~
Moisture Removal		gal/h	0.08	0.19	0.41	0.67
EER Rated			12.5			12.2
SEER			19		18.5	19
Piping Connections	Liquid	in. (mm)	Ø 1/4 (Ø 6.4)			
	Gas		Ø 3/8 (Ø 9.5)		Ø 1/2 (Ø 12.7)	Ø 16
	Drain		Ø 3/4 (Ø 16.0)			
Max. Interunit Piping Length		ft. (m)	98-2/5		98-2/5	
Max. Interunit Height Difference			49-1/4 (15)		65-5/8 (20)	
Chargeless			32 4/5			
Amount of Additional Charge of Refrigerant		oz/ft g/m	0.21 (20)			
Operating Range - Cooling		°F DB	50° - 115°F			
Operating Range - Low-Ambient Cooling**			5° - 115°F			
Operating Range - Cooling with Optional Air Adjustment Grille**			-4° - 115°F			
Indoor Unit			**FTK09AXVJU**	**FTK12AXVJU**	**FTK18AXVJU**	**FTK24AXVJ**
Airflow Rate	H	cfm (m³/min)	431 (12.2)	436 (12.3)	716 (20.3)	716 (20.3)
	M		322 (9.1)	316 (8.9)	605 (17.1)	605 (17.1)
	L		249 (7.1)	247 (7.0)	467 (13.2)	467 (13.2)
	SL		142 (4.0)	132 (3.7)	395 (11.2)	395 (11.2)
Fan	Speed	Steps	5 Steps, Quiet, Auto			
Air Direction Control			Right, Left, Horizontal, Downward			
Air Filter			Removable, Washable			
Dimensions (H × W × D)		in. (mm)	11-1/3 × 30-29/32 × 9-27/32 (288 X 785 X 250)		11-11/16 X 39-1/2 X 11-1/3 (297 X 1003 X 288)	
Weight		lbs.	20 (9)	22 (10)	31 (14)	31 (14)
Sound Pressure Level (H / M / L / SL)		dB(A)	43 / 36 / 30 / 19	45 / 37 / 31 / 19	49 / 44 / 38 / 33	53 / 45 / 39 / 34
Outdoor Unit			**RK09AXVJU**	**RK12AXVJU**	**RK18AXVJU**	**RK24AXVJ**
Compressor	Motor Output	W		–		–
Refrigerant	Type		R-410A			
	Charge	lbs.(kg)	1.54 (0.70)	2.09 (0.95)	3.20 (1.45)	3.86 (1.75)
Airflow Rate	H cfm	(cubic m / min)	1083 (30.7)	1051 (29.8)	2,005 (56.8)	1,908 (54.0)
Dimensions (H × W × D)		in. (mm)	21-11/16 X 26-1/2 X 11-3/16 (550 × 673 × 284)		27-13/32 X 36-5/8 X 13-13/16 (696 X 930 X 351)	
Weight		lbs. (kg)	55 (25)	62 (28)	99 (45)	106 (48)
Sound Pressure Level	H	dB(A)	46	49	54	55
ENERGY STAR® Certified			Yes	Yes	Yes	No

** Cutting a jumper or a dipswitch setting is required. Refer to installation manual.

Unit Combination		Power Supply				Compressor	OFM		IFM	
Indoor Unit	Outdoor Unit	Hz -	Voltage Range	MC	MOCP	RLA	W	FLA	W	FLA
FTK09AXVJU	RK09AXVJU	60 - 208	Min. 187 V Max. 253 V	7	15	6.8	41	0.36	38	0.3
		60 - 230								
FTK12AXVJU	RK12AXVJU	60 - 208	Min. 187 V Max. 253 V	7.8	15	7.5	41	0.47	38	0.36
		60 - 230								
FTK18AXVJU	RK18AXVJU	60 - 208	Min. 187 V Max. 253 V	13.4	20	13	128	0.99	35	0.5
		60 - 230								
FTK24AXVJU	RK24AXVJU	60 - 208	Min. 187 V Max. 253 V	13.4	20	13	128	1	35	0.5
		60 - 230								

DAIKIN 19 SERIES

Wall-Mounted Heat Pump (19 SEER | Up to 10 HSPF)



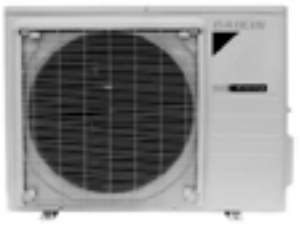

Model	Indoor Unit		FTX09AXVJU		FTX12AXVJU		FTX18AXVJU		FTX24AXVJU	
	Outdoor Unit		RX09AXVJU		RX12AXVJU		RX18AXVJU		RX24AXVJU	
			Cooling	Heating	Cooling	Heating	Cooling	Heating	Cooling	Heating
Capacity Rated (Min. ~ Max.)		Btu/h	8,900 (4,400 - 10,200)	10,000 (4,400 - 13,000)	10,900 (4,400 - 13,300)	13,500 (4,400 - 16,400)	18,000 (5,500 ~ 20,000)	21,600 (5,500 - 24,000	21,200 (5,500 - 24,000)	24,000 (5,800 - 24,000)
Moisture Removal		gal/h	0.08	—	0.19	—	0.41	—	0.67	—
COP Rated			4.06		3.8		3.6		3.45	
EER Rated			12.5		12.5		12.5		12.2	
SEER			19		19		18.5		19	
HSPF			10		10		9		9	
Piping Connections	Liquid	in. (mm)	Ø 1/4 (Ø 6.4)							
	Gas		Ø 3/8 (Ø 9.5)				Ø 1/2 (Ø 12.7)		Ø 5/8 (Ø 15.9)	
	Drain		Ø 3/4 (Ø 19.0)							
Max. Interunit Piping Length		ft. (m)	65-5/8 (20)				98-2/5 (30)			
Max. Interunit Height Difference			49-1/4 (15)				65-5/8 (20)			
Chargeless			32-4/5 (0.80)							
Amount of Additional Charge of Refrigerant		oz/ft (g/m)	0.21 (20)							
Operating Range - Cooling		°F DB	50° - 115°F							
Operating Range - Low-Ambient Cooling**			5° - 115°F							
Operating Range - Cooling with Optional Air Adjustment Grille**			-4° - 115°F							
Operating Range - Heating*		°F WB	5° - 65°F							
Indoor Unit			FTX09NMVJU		FTX12AXVJUJ		FTX18AXVJU		FTX24AXVJU	
Airflow Rate	H	(cfm) m³/min	431 (12.2)	402 (11.4)	436 (12.3)	412 (11.7)	716 (20.3)	716 (20.3)	716 (20.3)	716 (20.3)
	M		322 (9.1)	322 (9.1)	316 (8.9)	316 (8.9)	605 (17.1)	605 (17.1)	605 (17.1)	605 (17.1)
	L		249 (7.1)	249 (7.1)	247 (7.0)	247 (7.0)	467 (13.2)	467 (13.2)	467 (13.2)	467 (13.2)
	SL		219 (6.2)	219 (6.2)	210 (5.9)	210 (5.9)	395 (11.2)	395 (11.2)	395 (11.2)	395 (11.2)
Fan	Speed	Steps	5 Steps, Quiet, Auto							
Air Direction Control			Right, Left, Horizontal, Downward							
Air Filter			Removable, Washable							
Dimensions (H × W × D)		in. (mm)	11-1/3 × 30-29/32 × 9-27/32 (288 × 785 × 250)				11-11/16 × 39-1/2 × 11-1/3 (297 × 1005 × 288)			
Weight		lbs. (kg)	20 (9)		22 (10)		31(14)			
Sound Pressure Level (H / M / L / SL)		dB(A)	43 / 36 / 30 / 25	43 / 36 / 29 / 25	45 / 37 / 31 / 26	45 / 37 / 30 / 26	49 / 44 / 38 / 33	49 / 42 / 37 / 33	53 / 45 / 39 / 34	53 / 43 / 37 / 34
Outdoor Unit			RX09AXVJU		RX12AXVJU		RX18AXVJU		RX24AXVJU	
Compressor	Motor Output	W	–				–			
Refrigerant	Type		R-410A							
	Charge	lbs. (kg)	1.54 (0.70)		2.09 (0.95)		3.2 (1.45)		3.86 (1.75)	
Airflow Rate	H	(cfm) m³/min	1083 (30.7)	1,103 (31.2)	1051 (29.8)	966 (27.4)	2,005 (56.8)	1,905 (53.9)	1,908 (54.0)	1,908 (54.0)
Dimensions (H × W × D)		in. (mm)	21-11/16 × 26-1/2 × 11-3/16 (551 X 673 X 284)				27-13/32 × 36-5/8 × 13-13/16 (696 × 930 × 351)			
Weight		lbs. (kg)	57 (26)		64 (29)		101 (46)		106 (48)	
Sound Pressure	H	dB(A)	46	48	49		54		55	
ENERGY STAR® Certified			Yes		Yes		Yes		No	

**Cutting a jumper or a dipswitch setting is required. Refer to installation manual.

Unit Combination		Power Supply				Compressor	OFM		IFM	
Indoor Unit	Outdoor Unit	Hz - Volts	Voltage Range	MC	MOCP	RLA	W	FLA	W	FLA
FTX09AXVJU	RX09NMVJU	60 - 208	Min. 187 V Max. 253 V	12.1	15	8.5	41	0.36	38	0.3
		60 - 230								
FTX12AXVJU	RX12NMVJU	60 - 208	Min. 187 V Max. 253 V	12.2	15	8.5	41	0.47	38	0.36
		60 - 230								
FTX18AXVJU	RX18NMVJU	60 - 208	Min. 187 V Max. 253 V	18.3	20	10.8	128	0.99	35	0.5
		60 - 230								
FTX24AXVJU	RX24NMVJU	60 - 208	Min. 187 V Max. 253 V	18.3	20	12	128	1	35	0.5
		60 - 230								

Wall-Mounted Heat Pump (Up to 18 SEER | Up to 10 HSPF)



Model	Indoor Unit		FTXR09TVJUW/S		FTXR12TVJUW/S		FTXR18TVJUW/S	
	Outdoor Unit		RX09RMVJU9A		RX12RMVJU9A		RX18RMVJU9A	
			Cooling	Heating	Cooling	Heating	Cooling	Heating
Capacity Rated		Btu/h	9,000	10,000	12,000	13,500	18,000	20,000
(Min. ~ Max.)			(4,500 - 10,600)	(4,100 ~ 14,600)	(4,500 - 12,800)	(4,100 ~ 15,800)	(5,800 - 21,200)	(5,800 ~ 21,200)
COP Rated			4		3.58		3.34	
EER Rated			11				9.6	
SEER			18		17		14.5	
HSPF			9.3		10		9.8	
Piping Connections	Liquid	in. (mm)	Ø 1/4 (Ø 6.4)					
	Gas		Ø 3/8 (Ø 9.5)				Ø 1/2 (Ø 12.7)	
	Drain		Ø 11/16 (Ø 18.0)					
Max. Interunit Piping Length		ft (m)	65-5/8 (20)				98-1/2 (30)	
Max. Interunit Height Difference			49-1/4 (15)				65-5/8 (20)	
Chargeless			32-4/5 (0.83)					
Amount of Additional Charge of Refrigerant		oz/ft (g/m)	0.21 (20)					
Operating Range - Cooling		°F DB	50° - 115°F					
Operating Range - Low-Ambient Cooling*			14° - 115°F					
Operating Range - Cooling with Optional Air Adjustment Grille*			-4° - 115°F					
Operating Range - Heating		°F WB	5° - 65°F					
Indoor Unit			**FTXR09TVJUW/S**		**FTXR12TVJUW/S**		**FTXR18TVJUW/S**	
Airflow Rate	H	cfm (m³/min)	272 (7.7)	346 (9.8)	335 (9.5)	395 (11.2)	350 (9.9)	413 (11.7)
	M		208 (5.9)	258 (7.3)	219 (6.2)	290 (8.2)	245 (7.8)	332 (9.4)
	L		162 (4.6)	201 (5.7)	169 (4.8)	226 (6.4)	226 (6.4)	275 (7.8)
	SL		134 (3.8)	117 (3.3)	131 (3.7)	131(3.7)	208 (5.9)	208 (5.9)
Fan	Speed	Steps	5 Steps, Quiet, Auto					
Air Direction Control			Right, Left, Horizontal, Downward					
Air Filter			Removable, Washable					
Dimensions (H × W × D)		in. (mm)	11-15/16 × 39-5/16 × 8-3/8 (303 × 998 × 212)					
Weight		Lbs (kg)	27 (12)				27 (12)	
Sound Pressure Level (H / M / L / SL)		dB(A)	38 / 32 / 25 / 19	41 / 34 / 28 / 19	45 / 34 / 26 /	45 / 37 / 29 / 20	46 / 40 / 35 / 30	47 / 41 / 35 / 30
Outdoor Unit			**RX09RMVJU9A**		**RX12RMVJU9A**		**RX18RMVJU9A**	
Refrigerant	Type		R-410A					
	Charge	Lbs (kg)	2.09 (0.95)				2.49 (1.13)	
Airflow Rate	H	cfm (m³/min)	985 (27.9)	1140 (32)	1,105	1,130 (32)	2,461 (69.7)	2,553 (72.3)
Dimensions (H × W × D)		in. (mm)	21-5/8 × 26-9/16 × 11-3/16 (550 × 675 × 284)				28-15/16 × 34-1/4 × 12-5/8 (735 × 870 × 320)	
Weight		Lbs (kg)	60 (27)				97 (44)	
Sound Pressure Level	H	dB(A)	46	50	49	51	54	55
ENERGY STAR® Certified			No		No		No	

*Cutting a jumper or a dipswitch setting is required. Refer to installation manual.

Unit Combination		Power Supply				Compressor	OFM		IFM	
Indoor Unit	Outdoor Unit	Hz -	Voltage Range	MC	MOCP	RLA	W	FLA	W	FLA
FTXR09TVJUW/S	RX09RMVJU9A	60 - 208	Min. 187 V Max. 253 V	9	15	7.5	39	0.13	29	0.13
		60 - 230								
FTXR12TVJUW/S	RX12RMVJU9A	60 - 208	Min. 187 V Max. 253 V	9.1	15	7.5	39	0.15	29	0.19
		60 - 230								
FTXR18TVJUW/S	RX18RMVJU9A	60 - 208	Min. 187 V Max. 253 V	12.8	15	10.8	110	0.38	29	0.21
		60 - 230								

DAIKIN AURORA

Wall-Mounted Heat Pump (Up to 20.3 SEER | Up to 12.5 HSPF)







Our outdoor unit drain pans have up to 14 holes which allows for effective drainage of condensation. In some case, this improved drain pan design eliminates the need for drain pan heaters, resulting in higher efficiencies in low ambient temperatures.

Model	Indoor Unit		FTX09NMVJUA		FTX12NMVJUA		FTX15NMVJU		FTX18UVJU		FTX24UVJU	
	Outdoor Unit		RXL09QMVJUA		RXL15QMVJUA		RXL15QMVJUA		RXL18UMVJUA		RXL24UMVJUA	
			Cooling	Heating	Cooling	Heating	Cooling	Heating	Cooling	Heating	Cooling	Heating
Capacity Rated (Min. ~ Max.)		Btu/h	9,000 (4,400 ~ 10,900)	10,900 (4,400 - 16,000)	10,600 (4,400 - 13,300	13,400 4,400 -18,400	15,000 (5,800 - 18,400)	18,300 (5,800 ~ 24,600)	18,000 (9,000 - 21,600)	21,600 (9,000 - 28,000	21,200 (9,000 - 25,800)	24,000 (9,000 - 32,000
Moisture Removal		gal/h	0.32	—	0.45	—	0.63	—	—	—	—	—
COP Rated			4.20		3.90		4.00		3.5		3.5	
EER Rated			12.5				13		12.5			
SEER			20						20.3		20	
HSPF			12.5		12		12.5		10.3			
Piping Connections	Liquid	in. (mm)	Ø 1/4 (Ø 6.4)									
	Gas		Ø 3/8 (Ø 9.5)				Ø 1/2 (Ø 12.7)				Ø 5/8 (Ø 15.9)	
	Drain		Ø 5/8 (Ø 16.0)									
Max. Interunit Piping Length		ft. (m)	65-5/8 (20)				98-1/2 (30)					
Max. Interunit Height Difference			49-1/4 (15)				65-5/8 (20)					
Chargeless			32-4/5 (0.83)									
Amount of Additional Charge of		oz/ft	0.21 (20)						0.32 (30)			
Operating Range - Cooling		°F DB	50° - 115°F									
Operating Range - Low-Ambient Cooling*			5° - 115°F									
Operating Range - Cooling with Optional Air Adjustment Grille*			-4° - 115°F									
Operating Range - Heating†		°F WB	-13° - 60°F		-13°- 65 °F		-13°- 60 °F		-13°- 65 °F			
Indoor Unit			**FTX09NMVJUA**		**FTX12NMVJUA**		**FTX15NMVJU**		**FTX18UVJU**		**FTX24UVJU**	
Airflow Rate	H	cfm (m³/min)	417 (11.8)	403 (11.4)	434 (12.3)	413	593 (16.8)	653 (18.5)	583 (16.5)	713 (20.2)	643	699 (19.8)
	M		297 (8.4)	328 (9.3)	311 (8.8)	321	505 (14.3)	554 (15.7)	484 (13.7)	583 (16.5)	494	572 (16.2)
	L		244 (6.9)	251 (7.1)	247 (7.0)	258	431 (12.2)	470 (13.3)	385 (10.9)	431 (12.2)	350 (9.9)	445 (12.6)
	SL		141 (4.0)	215 (6.1)	145 (4.1)	219	367 (10.4)	399 (11.3)	360 (10.2)	399 (11.3)	328 (9.3)	403 (11.4)
Fan	Speed	Steps	5 Steps, Quiet, Auto									
Air Direction Control			Right, Left, Horizontal, Downward									
Air Filter			Removable, Washable									
Dimensions (H × W × D)		in. (mm)	11-1/4 × 30-5/16 × 8-3/4 (285 × 770 × 223)				11-5/8 × 39 × 10-3/8 (295 × 990 × 263)		13-3/8 × 41-5/16 × 10-1/4 (340 × 1,050 × 261)			
Weight		lbs. (kg)	18 (8)				27 (12)		33 (15)			
Sound Pressure Level (H / M / L / SL)		dB(A)	43 /36 / 29 / 25	43 / 36 / 29	45 / 37 / 30 / 19	45 / 37 / 30 / 26	45 / 41 / 36 / 33	5 / 41 / 37 / 33	46 / 41 / 36 /	48 / 42 / 35 /	51 / 44 /	48 / 42 / 37 /
Outdoor Unit			**RXL09QMVJUA**		**RXL12QMVJU9A**		**RXL15QMVJUA**		**RXL18UMVJUA**		**RXL24UMVJUA**	
Compressor	Motor Output	W	790		1,100				—			
Refrigerant	Type		R-410A									
	Charge	lbs. (kg)	2.09 (0.95)				3.20 (1.45)		3.53 (1.60)			
Airflow Rate	H	cfm (m³/min)	1,105 (31.3)	922 (26.1)	1,144 (32.4)	1,006	2,044 (57.9)	2,044 (57.9)	2,417 (68.5)	2,361 (66.9)	2,417	2,361 (66.9)
	SL		865 (24.5)	777 (22.0)	865 (24.5)	777	1,762 (49.9)	1,585 (44.9)	1,907 (54.0)	2,134 (60.4)	1,907	2,134 (60.4)
Dimensions (H × W × D)		in. (mm)	21-5/8 × 26-9/16 × 11-3/16 (550 × 675 × 284)				28-15/16 × 24-1/4 × 12-5/8 (735 × 615 × 320)					
Weight		lbs. (kg)	60 (27)		70 (32)		108 (49)		130 (59)			
Sound Pressure Level	H	dB(A)	49		50		50	55	54	55	55	
ENERGY STAR® Certified			NO		NO				NO		NO	

* Cutting a jumper or a dipswitch setting is required. Refer to installation manual.

† The installation of an optional drain-pan is recommended in areas where ambient temperature may fall below 5°F (-15°C) or in areas of heavy snowfall or high levels of wintertime humidity.

**ENERGY STAR® Most Efficient 2022 recognition is achieved when used with the Daikin *One* + Smart Thermostat. Products that are recognized as the Most Efficient of ENERGY STAR® in 2022 prevent greenhouse gas emissions by meeting rigorous energy efficiency performance levels set by the U.S. Environmental Protection Agency.

Unit Combination		Power Supply				Compressor	OFM		IFM	
Indoor Unit	Outdoor Unit	Hz -	Voltage Range	MCA	MOCP	RLA	W	FLA	W	FLA
FTX09NMVJUA	RXL09QMVJUA	60 - 208 60 - 230	Min. 187 V Max. 253 V	9.5	15	8.5	18	0.15	21	0.20
FTX12NMVJUA	RXL12QMVJU9A	60 - 208 60 - 230	Min. 187 V Max. 253 V	13	15	12	20	0.17	28	0.23
FTX15NMVJU	RXL15QMVJUA	60 - 208 60 - 230	Min. 187 V Max. 253 V	13	15	11.8	71	0.47	33	0.23
FTX18UVJU	RXL18UMVJUA	60 - 208 60 - 230	Min. 187 V Max. 253 V	18.7	20	18.25	76	0.47	48	0.37
FTX24UVJU	RXL24UMVJUA	60 - 208 60 - 230	Min. 187 V Max. 253 V	18.9	20	18.25	76	0.47	48	0.57

DAIKIN AURORA

Wall-Mounted Heat Pump (Up to 20.3 SEER | Up to 12.5 HSPF)

COMFORTABLE LIMITED WARRANTY* PROTECTION

Complete warranty details available from your local dealer/contractor or at www.daikincomfort.com. To receive the 12-Year Parts Limited Warranty, online registration must be completed within 60 days of installation. Online registration is not required in California or Québec.

If product installed in a commercial application, limited warranty period is 5 years.



Living in colder climates doesn't mean a heat pump isn't a viable option to heat each space in your home or business, nor does living in warmer climates preclude the use of a heat pump as a viable option for cooling. The outdoor units of this Daikin AURORA heat pump system have been redesigned to withstand extreme weather conditions, even when it is down to -13ºF WB (-25ºC WB) or up to 115ºF DB (46ºC DB) for year round comfort.

Standard Features

- Energy Efficient – Up to 20.3 SEER, up to 12.5 HSPF, up to 13 EER
- Up to 100% rated cooling capacity at 104ºF DB (40ºC DB).
- Cooling Range: 50º - 115ºF (Extended operation to -4º - 115ºF with facility setting and air adjustment grille)
- Heating Range: -13º - 60ºF
- Redesigned PCB in the outdoor unit twithstand extreme conditions
- Indoor Sound Pressure as Low as 19* dB(A)
- Outdoor Sound Pressure as Low as 49 dB(A)
- Washable Air Filter
- Program Dry Function
- Econo Mode
- Titanium Apatite Photocatalytic Air Purifying Filter
- Powerful Operation Mode
- Backlit Wireless Remote Controller
- Outdoor Unit Quiet Operation
- Auto-Changeover
- Auto-Fan Speed Control
- Self Diagnostics with Digital Display
- Auto-Restart After Power Failure
- Anti-Corrosion Heat Exchanger Treatment
- Quick Warming Function
- Hot Start Function
- Automatic Defrosting *On SL fan speed

Optional Features

- Wired controller
- Compatible with Daikin One+ Smart Thermostat, DKN Residential Cloud Wi-Fi Adaptor, or DKN Plus Interface

IDEAL SOLUTIONS FOR:

- Hot & cold regions where homeowners want to enjoy a reliable, energy efficient source of heating and cooling
- Cold regions where homeowners want to enjoy a reliable, energy efficient source of heat
- Renovations, remodeling and new construction
- Sun rooms, basements, garages, hot or cold rooms, attics where the walls tend to be lower, or wherever wall space is at a premium
- Ceiling void or attic does not allow for a viable duct run option

Daikin AURORA heat pump for extreme weather conditions

Up to 100% rated heating capacity at 5ºF WB (-15ºC WB) and confirmed continuous operation, as low as -13ºF WB (-25ºC WB) ambient temperature.

Auto - Restart

The unit memorizes the operation mode, airflow and temperature settings. Should there be a power failure when the unit is in operation, it will automatically return to the same operating conditions when the power is restored.

Titanium Apatite Photocatalytic Air Purifying Filter

This filter combines the air-purifying filter and titanium apatite photocatalytic deodorizing filter in a single highly effective unit.

Comfort Mode

Comfort Mode operation improves comfort. When cooling, the flap positions itself horizontally to prevent cold airflow from being blown directly onto the body. When heating, the flap turns vertically downwards to drive warm air to the bottom of the room.

Hot Start

(Heat Pump) When the heating operation starts or when the unit changes from cooling to heating, there is no cold draft

Powerful Operation Mode

Pushing the POWERFUL button on the remote control gives you a boost in cooling or heating power for a 20-minute period, even if the unit is already operating at high capacity.

Part Number	Optional Accessories for Indoor Unit	Part Number	Optional Accessories for Outdoor Unit	Part Number	Optional Accessories for Outdoor Unit
BRC944B2-A08	Wired Remote Controller kit (Adaptor Required)	DACA-WB-1	Powder-Coated Wall-Mounted Bracket	KPS067A41	Snow hood (intake side plate) (09 & 12)
BRCW901A08	Wired Remote Controller Cord - 8m	KPW063B4	Air direction adjustment grille (15)	KPS067A42	Snow hood (intake rear plate) (09 & 12)
DACA-BRCW901P10	Remote Controller Cable, Plenum Rated, 10 ft	KPW937F4	Air direction adjustment grille (09 & 12)	KPS067A44	Snow hood (outlet) (09 & 12)
DACA-BRCW901P25	Remote Controller Cable, Plenum Rated, 25 ft	KEH067A41E(A)	Daikin BMS Drain Pan Heater Small (09 & 12)	KPS063A41	Snow hood (intake side plate) (15)
KAF968B42	Titanium apatite photocatalytic air-purifying filter WITH frame	KEH063A4E	Daikin BML Drain Pan Heater Large (15)	KPS063A44	Snow hood (intake rear plate) (15)
DACA-CP3-1	Condensate Pump (Fits inside all Daikin indoor unit heads)	KKG067A41	Back protection wire net (09 & 12)	KPS063A47	Snow hood (outlet) (15)
DTST-ONE-ADA-A	Daikin One + Smart Thermostat	KKG063A42	Back protection wire net (15)	KKP937A4	Drain Plug for OD Unit
AZAI6WSCDKB	DKN Residential Cloud Wi-Fi Adaptor	RAQAHLGD2	Rear coil guard (09 & 12)		
AZAI6WSPDKC	Daikin DKN Plus Interface	RAQAHLGD1	Rear coil guard (15)		

DAIKIN AURORA

Single Zone FDMQ Ducted Concealed Heat Pump (Up to 19.4 SEER | Up to 10.8 HSPF)

Our outdoor unit drain pans have up to 14 holes which allows for effective drainage of condensation. In some case, this improved drain pan design eliminates the need for drain pan heaters, resulting in higher efficiencies in low ambient temperatures.







Model	Indoor Unit		FDMQ12RVJU		FDMQ18RVJU		FDMQ24RVJU	
	Outdoor Unit		RXL12QMVJU9A		RXL18UMVJUA		RXL24UMVJUA	
			Cooling	Heating	Cooling	Heating	Cooling	Heating
Capacity Rated (Min. ~ Max.)		Btu/h	10,800 6,500 - 13,200	13,600 6,300 - 17,000	17,600 9,000 - 20,200	21,600 5,700 - 23,000	21,200 9,000 - 24,000	24,000 9,000 - 27,600
Moisture Removal		gal/h	N/A	—	N/A	—	N/A	—
COP Rated			3.7		3.8		3.8	
EER Rated			11.7		12.7		12.5	
SEER			18		19.4		18.6	
HSPF			10.8		10.3		10	
Piping Connections	Liquid	in. (mm)			1/4			
	Gas		3/8		1/2 (6.4)		Ø 5/8	
	Drain		(9.5)		(12.7) Ø 1 (25.0)		(15.9)	
Max. Interunit Piping Length		ft. (m)	65-5/8 (20)		98-1/2 (30)			
Max. Interunit Height Difference			49-1/5 (15)		65-5/8 (20)			
Chargeless					32.8 (10)			
Amount of Additional Charge of Refrigerant		oz/ft (g/m)	0.21 (20)		0.21			
Operating Range - Cooling		°F DB			50° - 115°F			
Operating Range - Low-Ambient Cooling*					5° - 115°F			
Operating Range - Cooling with Optional Air Adjustment Grille*			-4° - 115°F					
Operating Range - Heating†		°F WB	-13°- 65 °F					
Indoor Unit			**FDMQ12RVJU**		**FDMQ18RVJU**		**FDMQ24RVJU**	
External Static Pressure		"Wg(Pa)	0.6 (150)					
Airflow Rate	H	cfm (m³/min)	392 (11.1)	392 (11.1)	675 (19.1)	675 (19.1)	798 (22.6)	798 (22.6)
	M		332 (9.4)	332 (9.4)	572 (16.2)	572 (16.2)	678 (19.2)	678 (19.2)
	L		275 (7.8)	275 (7.8)	473 (13.4)	473 (13.4)	558 (15.8)	558 (15.8)
	SL		—	—	—	—	—	—
Fan	Speed	Steps	—					
Air Filter			—					
Dimensions (H × W × D)		in. (mm)	9-5/8 × 27-9/16 × 31-1/2 (245 × 700 × 800)		9-5/8 × 39-3/8 × 31-1/2 (245 × 1,000 × 800)			
Weight		lbs. (kg)	64 (29)		82 (37)			
Sound Pressure Level (H / M / L / SL)		dB(A)	33	33	35	35	40	40
Outdoor Unit			**RXL12QMVJU9A**		**RXL18UMVJUA**		**RXL24UMVJUA**	
Compressor	Motor Output	W	1100		1,920			
Refrigerant	Type		R-410A					
	Charge	lbs. (kg)	2.09 (0.95)		3.53 (1.60)			
Airflow Rate	H	cfm (m³/min)	1,144 (32.4)	1,006 (28.5)	2,418 (68.5)	2,361 (66.9)	2,418 (68.5)	2,361 (66.9)
	SL		—	—	—	—	—	—
Dimensions (H × W × D)		in. (mm)	21-5/8 × 26-9/16 × 11-3/16 (550 × 675 × 284)		28-15/16 × 34-1/4 × 12-5/8 (735 × 870 × 320)			
Weight		lbs. (kg)	70 (32)		130 (59)			
Sound Pressure Level	H	dB(A)	50		54	55	55	55
ENERGY STAR® Certified			NO		NO		NO	

* Cutting a jumper or a dipswitch setting is required. Refer to installation manual.

† The installation of an optional drain-pan is recommended in areas where ambient temperature may fall below 5°F (-15°C) or in areas of heavy snowfall or high levels of wintertime humidity.

Unit Combination		Power Supply				Compressor	OFM		IFM	
Indoor Unit	Outdoor Unit	Hz -	Voltage Range	MCA	MOCP	RLA	W	FLA	W	FLA
FDMQ12RVJU	RXL12QMVJU9A	60 - 208 60 - 230	Min. 187 V Max. 253 V	13	15	12	20	0.17	130	0.73
FDMQ18RVJU	RXL18UMVJUA	60 - 208 60 - 230	Min. 187 V Max. 253 V	19.5	20	18.25	76	0.47	230	1.22
FDMQ24RVJU	RXL24UMVJUA	60 - 208 60 - 230	Min. 187 V Max. 253 V	19.8	20	18.25	76	0.47	230	1.54

DAIKIN VISTA

Ceiling Cassette Heat Pump (Up to 20.9 SEER | Up to 11.7 HSPF)



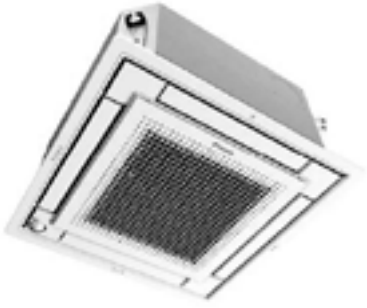



Model	Indoor Unit / Outdoor Unit		FFQ09Q2VJU / RX09RMVJU9A		FFQ12Q2VJU / RX12RMVJU9A		FFQ15Q2VJU / RX15RMVJUA		FFQ18Q2VJU / RX18RMVJU9A	
			Cooling	Heating	Cooling	Heating	Cooling	Heating	Cooling	Heating
Capacity Rated (Min. ~ Max.)		Btu/h	9,100 (4,600 ~ 11,000)	10,000 (4,600 - 14,000	10,800 (1,600 - 16,800	13,500 (4,600 ~ 16,800	14,400 (5,100 ~ 16,200)	16,200 (5,200 - 16,300)	17,400 (5,100 ~ 18,800)	21,600 (5,400 21,800
Moisture Removal		gal/h	N/A	–	N/A	–	N/A	–	N/A	–
COP Rated			4.58		4.02		3.86		3.36	
EER Rated			13.0		12.5		12.5		12.5	
SEER			20.9		20.2		20.7		19.3	
HSPF			11.7		11.2		11.0		10.1	
Piping Connections	Liquid	in. (mm)	Ø 1/4 (Ø							
	Gas		Ø 3/8 (Ø 9.5)				Ø 1/2 (Ø 12.7)			
	Drain		Ø1-1/32 (Ø 26.0)							
Max. Interunit Piping Length		ft. (m)	65-5/8 (20)				98-2/5 (2.4)			
Max. Interunit Height Difference			49-1/4 (15)				65-5/8 (20)			
Chargeless			32.8							
Amount of Additional Charge of Refrigerant		oz/ft (g/m)	0.21 (20)							
Operating Range - Cooling		°F DB	50° - 115°F							
Operating Range - Low-Ambient Cooling*			14° - 115°F							
Operating Range - Cooling with Optional Air Adjustment Grille*			-4° - 115°F							
Operating Range - Heating		°F WB	5° - 65°							
Indoor Unit			**FFQ09Q2VJU**		**FFQ12Q2VJU**		**FFQ15Q2VJU**		**FFQ18Q2VJU**	
Airflow Rate	H	cfm (m³/min)	378 (10.7)	399 (11.3)	406 (11.5)	427 (12.1)	420 (11.9)	441 (12.5)	448 (12.7)	498 (14.1)
	M		339 (9.6)	357 (10.1)	353 (10.0)	371 (10.5)	367 (10.4)	385 (10.9)	378 (10.7)	420 (11.9)
	L		268 (7.6)	282 (8.0)	268 (7.6)	282 (8.0)	293 (8.3)	307 (8.7)	275 (7.8)	307 (8.7)
	SL		–	–	–	–	–	–	–	–
Fan	Speed	Steps	Turbo Fan, 3 Steps, Quiet, Auto							
Air Direction Control			Right, Left, Horizontal, Downward							
Air Filter			Removable, Washable							
Dimensions (H × W × D)		in. (mm)	10-1/4 × 22-5/8 × 22-5/8 (260 × 575 × 575)							
Weight		lbs. (kg)	36 (16)						39 (17.5)	
Sound Pressure Level (H / M / L / SL)		dB(A)	38 / 35 / 29		39 / 36 / 30		40 / 37 / 10		44 / 40 / 32	
Outdoor Unit			**RX09RMVJU9A**		**RX12RMVJU9A**		**RX15RMVJUA**		**RX18RMVJU9A**	
Compressor	Motor Output	W	790				1,100		1,100	
Refrigerant	Type		R-410A							
	Charge	lbs. (kg)	2.09 (0.95)				2.49 (1.13)			
Airflow Rate	H	cfm	985 (27.9)	1,105 (31.3)	1,105	1,105 (31.3)	2,314 (65.53)	2,108 (59.7)	2,461 (69.7)	2,553 (72.3)
Dimensions (H × W × D)		in. (mm)	21-5/8 × 26-9/16 × 11-3/16 (550 × 675 × 284)				28-15/16 × 34-1/4 × 12-5/8 (735 × 870 × 320)			
Weight		lbs. (kg)	60 (27)				97 (44)			
Sound Pressure Level	H	dB(A)	46	* 50	49 *	51	50	51	54	55
ENERGY STAR® Certified			NO		NO		NO		NO	

Cutting a jumper or a dipswitch setting is required. Refer to installation manual.

Unit Combination		Power Supply				Compressor	OFM		IFM	
Indoor Unit	Outdoor Unit	Hz - Volts	Voltage Range	MCA	MOCP	RLA	W	FLA	W	FLA
FFQ09Q2VJU	RX09RMVJU9A	60 - 208 60 - 230	Min. 187 V Max. 253 V	9.0	15	7.5	39	0.13	50	0.28
FFQ12Q2VJU	RX12RMVJU9A	60 - 208 60 - 230	Min. 187 V Max. 253 V	9.1	15	7.5	39	0.13	50	0.28
FFQ15Q2VJU	RX15RMVJUA	60 - 208 60 - 230	Min. 187 V Max. 253 V	9.7	15	8.0	91	0.31	50	0.28
FFQ18Q2VJU	RX18RMVJU9A	60 - 208 60 - 230	Min. 187 V Max. 253 V	12.8	15	10.75	110	0.38	50	0.28

DAIKIN LV SERIES

Wall Mounted Heat Pump (Up to 24.5 SEER | Up to 12.5 HSPF)

Products that are recognized as the Most Efficient of ENERGY STAR® in 2022 prevent greenhouse gas emissions by meeting rigorous energy efficiency performance levels set by the U.S. Environmental Protection Agency. Proper sizing and installation of equipment is critical to achieve optimal performance. Split system air conditioners and heat pumps must be matched with appropriate coil components to meet ***ENERGY STAR®*** *criteria. Ask your contractor for details or visit www.energystar.gov.*





Model	Indoor Unit		FTXS09LVJU		FTXS12LVJU		FTXS15LVJU		FTXS18LVJU		FTXS24LVJU	
	Outdoor Unit		RXS09LVJU		RXS12LVJU		RXS15LVJU		RXS18LVJU		RXS24LVJU	
			Cooling	Heating	Cooling	Heating	Cooling	Heating	Cooling	Heating	Cooling	Heating
Capacity Rated (Min. ~ Max.)		Btu/h	9,000 (4,400 ~ 10,600)	12,000 (4,400 - 15,600)	12,000 (4,800 ~ 12,000)	14,400 (4,800 ~ 14,400)	15,000 (5,800 ~ 15,000)	18,000 (5,800 ~ 18,000)	18,000 (5,800 ~ 18,000)	21,600 (5,800 ~ 21,600)	21,500 (7,800 ~ 21,500)	25,400 (7,800 - 21,600)
Moisture Removal		gal/h	0.3	—	0.5	—	0.8	—	1	—	1.2	—
COP Rated			4.46		4.35		4.00		3.70		3.37	
EER Rated			15.3		12.8		14.4		12.7		12.5	
SEER			24.5		23.0		20.6		20.3		20.0	
HSPF			12.5		12.5		11.6		11.0		10.6	
Piping Connections	Liquid	in. (mm)	Ø 1/4 (6.4)									
	Gas		Ø 3/8 (9.5)				Ø 1/2 (12.7)				Ø 5/8 (15.9)	
	Drain		Ø 5/8 (16.0)									
Max. Interunit Piping Length		ft. (m)	65.6 (20)				98.4 (30)					
Max. Interunit Height Difference			49.2 (15)				65.6 (20)					
Chargeless			32.8 (10)									
Amount of Additional Charge of Refrigerant		oz/ft (g/m)	0.21 (20)									
Operating Range Cooling		°F DB	50 - 115°F									
Operating Range - Low-Ambient Cooling*			14° - 115°F									
Operating Range - Cooling with Optional Air Adjustment Grille*			0° - 115°F									
Operating Range - Heating		°F WB	5° - 65°F									

Indoor Unit			FTXS09LVJU		FTXS12LVJU		FTXS15LVJU		FTXS18LVJU		FTXS24LVJU	
Airflow Rate	H	cfm (m³/min)	381 (10.8)	420 (11.9)	403 (11.4)	438 (12.4)	568 (16.1)	593 (16.8)	583 (16.5)	625 (17.7)	643 (18.2)	699 (19.8)
	M		279 (7.9)	321 (9.1)	307 (8.7)	335 (9.5)	477 (13.5)	505 (14.3)	484 (13.7)	526 (14.9)	494 (14.0)	572 (16.2)
	L		194 (5.5)	233 (6.6)	205 (5.8)	240 (6.8)	385 (10.9)	417 (11.8)	385 (10.9)	431 (12.2)	350 (9.9)	445 (12.6)
	SL		145 (4.1)	219 (6.2)	155 (4.4)	212 (6.0)	360 (10.2)	371 (10.5)	360 (10.2)	399 (11.3)	328 (9.3)	403 (11.4)
Fan	Speed	Steps	5 Steps, Quiet, Auto									
Air Direction Control			Right, Left, Horizontal, Downward									
Air Filter			Removable / Washable									
Dimensions (H × W × D)		in. (mm)	11-5/8 × 31-1/2 × 8-7/16 (295 × 800 × 215)				13-3/8 × 41-5/16 × 9-3/4 (340 × 1,050 × 248)					
Weight		lbs. (kg)	20 (9)		22 (10)		31 (14)					
Sound Pressure Level (H / M / L / S)		dB(A)	41 / 33 / 25 / 22	42 / 35 / 28 / 25	45 / 37 / 29 / 23	45 / 39 / 29 / 26	45 / 40 / 35 / 32	43 / 38 / 33 / 30	46 / 41 / 36 / 33	45 / 40 / 35 / 32	51 / 44 / 37 / 34	48 / 42 / 37 / 34

Outdoor Unit			RXS09LVJU		RXS12LVJU		RXS15LVJU		RXS18LVJU		RXS24LVJU	
Compressor	Motor Output	W	600				1,100				1,920	
Refrigerant	Type		R-410A									
	Charge	lbs. (kg)	2.43 (1.1)		2.65 (1.2)		3.97 (1.8)				5.07 (2.3)	
Airflow Rate	H	cfm (m³/min)	1,102 (31.2)	992 (28.1)	1,183 (33.5)	992 (28.1)	1,713 (48.5)	1,405 (39.8)	1,780 (50.4)	1,444 (40.9)	1,924 (54.5)	1,854 (52.5)
	SL		989 (28.0)	840 (23.8)	989 (28.0)	840 (23.8)	1,469 (41.6)	1,306 (37.0)	1,494 (42.3)	1,328 (37.6)	1,624 (46.0)	1,624 (46.0)
Dimensions (H × W × D)		in. (mm)	21-5/8 × 30-1/8 × 11-1/4 (550 × 765 × 285)				28-15/16 × 32-1/2 × 11-13/16 (735 × 825 × 300)				30-5/16 × 35-7/16 × 12-5/8 (770 × 900 × 320)	
Weight		lbs. (kg)	75 (34)				104 (47)				159 (72)	
Sound Pressure Level	H/L	dB(A)	47 / 43	48 / 44	49 / 44	49 / 45	47 / 44	48 / 45	49 / 46	49 / 46	52 / 49	52 / 49
ENERGY STAR® Certified			**		* **		*		**		**	

[1] Cutting a jumper or a dipswitch setting is required. Refer to installation manual.

*ENERGY STAR® Most Efficient 2022 recognition is achieved when used with the Daikin •••• smart thermostat.

Unit Combination		Power Supply				Compressor	OFM		IFM	
Indoor Unit	Outdoor Unit	Hz - Volts	Voltage Range	MCA	MOCP	RLA	W	FLA	W	FLA
FTXS09LVJU	RXS09LVJU	60 - 208	Min. 187 V Max. 253 V	8.00	15	3.2	23	0.22	23	0.15
		60 - 230				2.9				
FTXS12LVJU	RXS12LVJU	60 - 208	Min. 187 V Max. 253 V	8.75	15	4.4	23	0.22	23	0.15
		60 - 230				3.9				
FTXS15LVJU	RXS15LVJU	60 - 208	Min. 187 V Max. 253 V	13.75	20	4.7	53	0.32	48	0.31
		60 - 230				4.2				
FTXS18LVJU	RXS18LVJU	60 - 208	Min. 187 V Max. 253 V	13.75	20	6.6	53	0.32	48	0.32
		60 - 230				5.9				
FTXS24LVJU	RXS24LVJU	60 - 208	Min. 187 V Max. 253 V	17.50	20	7.9	66	0.40	48	0.57
		60 - 230				7.1				

DAIKIN LV SERIES

Slim-Duct Concealed Ceiling Units (Up to 15.5 SEER | Up to 10.4 HSPF)



Model	Indoor Unit / Outdoor Unit		FDXS09LVJU / RXS09LVJU		FDXS12LVJU / RXS12LVJU	
			Cooling	Heating	Cooling	Heating
Capacity Rated (Min.~Max.)		Btu/h	8,500 (4,400 ~ 8,500)	10,000 (4,400 ~ 10,000)	11,500 (4,800 ~ 11,500)	11,500 (4,800 ~ 11,500)
Moisture Removal		gal/h	2.5	—	4.0	—
COP Rated			3.45		3.51	
EER Rated			11.2		9.1	
SEER			15.1		15.5	
HSPF			10.3		10.4	
Piping Connections	Liquid	in. (mm)	Ø 1/4 (6.4)			
	Gas		Ø 3/8 (9.5)			
	Drain		Ø 23/32 (20.0)			
Max. Interunit Piping Length		ft. (m)	65.6 (20)			
Max. Interunit Height Difference			49.2 (15)			
Chargeless			32.8 (10)			
Amount of Additional Charge of Refrigerant		oz/ft (g/m)	0.21 (20)			
Operating Range - Cooling		°F DB	50 - 115°F			
Operating Range - Low-Ambient Cooling*			14° - 115°F			
Operating Range - Cooling with Optional Air Adjustment Grille*			0° - 115°F			
Operating Range - Heating		°F WB	5° - 65°F			
Indoor Unit			**FDXS09LVJU**		**FDXS12LVJU**	
External Static Pressure		"Wg (Pa)	0.12 (30)			
Airflow Rate	H	cfm (m³/min)	305 (8.6)			
	M		280 (7.9)			
	L		260 (7.4)			
	SL		235 (6.7)			
Fan	Speed	Steps	5 Steps, Quiet, Auto			
Air Filter			Removable / Washable			
Dimensions (H × W × D)		in. (mm)	7-7/8 × 27-9/16 × 24-7/16 (200 × 700 × 620)			
Weight		lbs. (kg)	47 (21)			
Sound Pressure Level (H / M / L)		dB(A)	35 / 33 / 31			
Outdoor Unit			**RXS09LVJU**		**RXS12LVJU**	
Compressor	Motor Output	W	600			
Refrigerant	Type		R-410A			
	Charge	lbs. (kg)	2.43 (1.1)		2.65 (1.2)	
Airflow Rate	H	cfm (m³/min)	992		1,183 (33.5)	
	L		989 (28.0)	840 (23.8)	989 (28.0)	992
Dimensions (H × W × D)		in. (mm)	21-5/8 × 30-1/8 × 11-1/4 (550 × 765 × 285)			
Weight		lbs. (kg)	75 (34)			
Sound Pressure Level (H / L)		dB(A)	47 / 43	48 / 44	49 / 44	49 / 45
ENERGY STAR® Certified			NO		NO	

[1] Cutting a jumper or a dipswitch setting is required. Refer to installation manual.

Unit Combination		Power Supply				Compressor	OFM		IFM	
Indoor Unit	Outdoor Unit	Hz - Volts	Voltage Range	MCA	MOCP	RLA	W	FLA	W	FLA
FDXS09LVJU	RXS09LVJU	60 - 208	Min. 187 V Max. 253 V	8.00	15	4.1	23	0.22	62	0.52
		60 - 230				3.7				
FDXS12LVJU	RXS12LVJU	60 - 208	Min. 187 V Max. 253 V	8.75	15	5.9	23	0.22	62	0.52
		60 - 230				5.3				

DAIKIN FDMQ

Ducted Concealed Indoor Unit (Up to 20.2 SEER | Up to 10.6 HSPF)

*Proper sizing and installation of equipment is critical to achieve optimal performance. Split system air conditioners and heat pumps must be matched with appropriate coil components to meet **ENERGY STAR®** criteria. Ask your contractor for details or visit www.energystar.gov.*





Model	Indoor Unit		FDMQ09RVJU		FDMQ12RVJU		FDMQ15RVJU		FDMQ18RVJU		FDMQ24RVJU	
	Outdoor Unit		RX09RMVJU9A		RX12RMVJU9A		RX15RMVJUA		RX18RMVJU9A		RX24RMVJUA	
			Cooling	Heating	Cooling	Heating	Cooling	Heating	Cooling	Heating	Cooling	Heating
Capacity Rated		Btu/h	9,000	10,900	10,800	13,600	14,400 (5,100-17,400)	18,000 (5,600-18,500)	17,600 (5,100 - 19,600)	21,600 (5,700 - 23,000)	21,800 (5,500-24,000)	24,000 (6,400 - 27,6000)
Moisture Removal		gal/h	N/A	–	N/A	–	N/A	–	N/A	–	N/A	–
COP Rated			4.1		3.7		3.8		3.8		3.8	
EER Rated			11.1		11.6		12.7		12.5		12.5	
SEER			17.8		19.4		20.2		18.5		18.6	
HSPF			10.3		10.6		10.3		10.3		10	
Piping Connections	Liquid	in. (mm)	Ø 1/4 (Ø 6.4)									
	Gas		Ø 3/8 (Ø 9.5)				Ø 1/2 (Ø 12.7)				Ø 5/8	
	Drain		Ø 1 (25.0)								(15.9)	
Max. Interunit Piping Length		ft. (m)	66 (20)				98.5 (30)					
Max. Interunit Height Difference			49.2 (15)				65.6 (20)					
Chargeless			32.8 (10)									
Amount of Additional Charge of Refrigerant		oz/ft (g/m)	0.21 (20)									
Operating Range - Cooling		°F DB	50 - 115°F									
Operating Range - Low-Ambient Cooling*			14° - 115°F									
Operating Range - Cooling with Optional Air Adjustment Grille*			-4° - 115°F									
Operating Range - Heating		°F WB	5° - 65°F									
Indoor Unit			**FDMQ09RVJU**		**FDMQ12RVJU**		**FDMQ15RVJU**		**FDMQ18RVJU**		**FDMQ24RVJU**	
External Static Pressure		"Wg(Pa)	0.6 (150)									
Airflow Rate	H	cfm (m³/min)	343 (9.7)	343 (9.7)	392 (11.1)	392 (11.1)	516 (14.6)	516 (14.6)	675 (19.1)	675 (19.1)	798 (22.6)	798 (22.6)
	M		290 (8.2)	290 (8.2)	332 (9.4)	332 (9.4)	438 (12.4)	438 (12.4)	572 (16.2)	572 (16.2)	678 (19.2)	678 (19.2)
	L		240 (6.8)	240 (6.8)	275 (7.8)	275 (7.8)	360 (10.2)	360 (10.2)	473 (13.4)	473 (13.4)	558 (15.8)	558 (15.8)
	SL		-	-	-	-	-	-	-	-	-	-
Fan	Speed	Steps	-									
Air Filter			-									
Dimensions (H × W × D)		in. (mm)	9-5/8 × 27-9/16 × 31-1/2 (245 × 700 × 800)				9-5/8 × 39-3/8 × 31-1/2 (245 × 1,000 × 800)					
Weight		lbs. (kg)	64 (29)				77 (35)		82 (37)			
Sound Pressure Level		dB(A)	32	32	33	33	34	34	35	35	40	40
Outdoor Unit			**RX09RMVJU9A**		**RX12RMVJU9A**		**RX15RMVJUA**		**RX18RMVJU9A**		**RX24RMVJUA**	
Compressor	Motor Output	W	790				1,100					
Refrigerant	Type		R-410A									
	Charge	lbs. (kg)	2.09 (0.95)				2.49 (1.13)				3.20 (1.45)	
Airflow Rate	H	cfm (m³/min)	985 (27.9)	1,105 (31.3)	1,105 (31.3)	1,105 (31.3)	2,313 (65.5)	2,108 (59.7)	2,461 (69.7)	2,553 (72.3)	2,642 (74.8)	2,642 (74.8)
Dimensions (H × W × D)		in. (mm)	21-5/8 × 26-9/16 × 11-3/16 (550 × 675 × 284)				28-15/16 × 34-1/4 × 12-5/8 (735 × 870 × 320)					
Weight		lbs. (kg)	60 (27)				97 (44)				108 (49)	
Sound Pressure Level	H	dB(A)	46	50	49	51	50	51	54	55	56	58
ENERGY STAR® Certified			NO		NO		YES		YES		YES	

Cutting a jumper or a dipswitch setting is required. Refer to installation manual.

Unit Combination		Power Supply				Compressor	OFM		IFM	
Indoor Unit	Outdoor Unit	Hz - Volts	Voltage Range	MCA	MOCP	RLA	W	FLA	W	FLA
FDMQ09RVJU	RX09RMVJU9A	60 - 208 60 - 230	Min. 187 V Max. 253 V	9	15	7.5	39	0.13	130	0.63
FDMQ12RVJU	RX12RMVJU9A	60 - 208 60 - 230	Min. 187 V Max. 253 V	9.1	15	7.5	39	0.13	130	0.73
FDMQ15RVJU	RX15RMVJUA	60 - 208 60 - 230	Min. 187 V Max. 253 V	9.7	15	8	91	0.31	230	0.87
FDMQ18RVJU	RX18RMVJU9A	60 - 208 60 - 230	Min. 187 V Max. 253 V	12.8	15	10.75	110	0.38	230	1.22
FDMQ24RVJU	RX24RMVJUA	60 - 208 60 - 208	Min. 187 V Max. 253 V	16.9	20	14.5	125	0.43	230	1.54

DAIKIN NV SERIES

Wall-Mounted Cooling Only (Up to 17.5 SEER | Up to 9.85 HSPF)



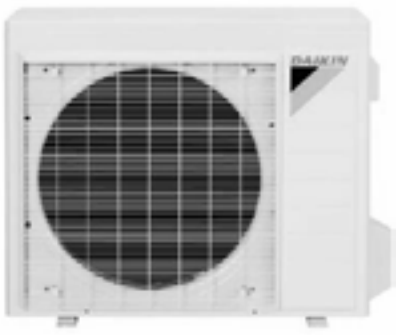

Model	Indoor Unit		FTX30NVJU	FTX36NVJU
	Outdoor Unit		RK30NMVJUA	RK36NMVJUA
Capacity Rated		Btu/h	31,400	34,400
(Min. ~ Max.)			(10,200 ~ 31,400)	(10,200 ~ 34,400)
Moisture Removal		gal/h	N/A	N/A
EER Rated			9.85	9.1
SEER			17.5	15.9
Piping Connections	Liquid	in. (mm)	Ø 1/4 (Ø 6.4)	
	Gas		Ø 5/8 (Ø 16.0)	
	Drain		Ø 5/8 (Ø 16.0)	
Max. Interunit Piping Length		ft. (m)	98-2/5 (29.8)	
Max. Interunit Height Difference			65-5/8 (20)	
Chargeless			32-4/3 (9.8)	
Amount of Additional Charge of Refrigerant		oz/ft (g/m)	0.32 (30)	
Operating Range - Cooling		°F DB	50° – 115°F	
Operating Range - Enhanced Cooling*			14° - 115°F	
Operating Range - Low Ambient Cooling**			-4° - 115°F	
Operating Range - Ultra Low Ambient Cooling***			-22° - 115°F	
Indoor Unit			FTX30NVJU	FTX36NVJU
Airflow Rate	H	cfm (m³/min)	890 (25.2)	915 (25.9)
	M		727 (20.6)	742 (21.0)
	L		572 (16.2)	572 (16.2)
	SL		512 (14.5)	512 (14.5)
Fan	Speed	Steps	5 Steps, Quiet, Auto	
Air Direction Control			Right, Left, Horizontal, Downward	
Air Filter			Removable, Washable	
Dimensions (H × W × D)		in. (mm)	13-3/8 x 47-1/4 x 10-3/16 (340 x 1,200 x 259)	
Weight		lbs. (kg)	38 (17)	
Sound Pressure Level (H / M / L / SL)		dB(A)	53 / 47 / 40 / 37	54 / 47 / 40 / 37
Outdoor Unit			RK30NMVJUA	RK36NMVJUA
Compressor	Motor Output	W	1,920	
Refrigerant	Type		R-410A	
	Charge	lbs. (kg)	3.64 (1.65)	3.64 (1.65)
Airflow Rate	H	cfm (m³/min)	2,528 (71.6)	2,811 (79.6)
	SL		—	—
Dimensions (H × W × D)		in.	28-15/16 x 34-1/4 x 12-5/8 (735 x 870 x 320)	
		(mm)		
Weight		lbs. (kg)	133 (60)	133 (60)
Sound Pressure Level	H	dB(A)	56	59
ENERGY STAR® Certified			NO	NO

* Activated with a dipswitch setting. Refer to installation manual for more details.

** Activated with a dipswitch setting and use of air direction adjustment grille (KPW063B4). Refer to installation manual for more details.

*** Activated with additional dipswitch setting and notes per **. Refer to installation manual for more details.

Unit Combination		Power Supply				Compressor	OFM		IFM	
Indoor Unit	Outdoor Unit	Hz - Volts	Voltage Range	MCA	MOP	RLA	W	FLA	W	FLA
FTX30NVJU	RK30NMVJUA	60 -	Min. 187 V Max. 253 V	17	20	16.25	93	0.62	64	0.37
		60 -								
FTX36NVJU	RK36NMVJUA	60 -	Min. 187 V Max. 253 V	17	20	16.25	123	0.83	64	0.37
		60 -								

DAIKIN NV SERIES

Wall-Mounted Heat Pump (Up to 17.5 SEER | Up to 9.3 HSPF)

COMFORTABLE LIMITED WARRANTY* PROTECTION

** Complete warranty details available from your local dealer/contractor or at www.daikincomfort.com. Warranty registration not required to receive the 10-Year Parts Limited Warrant for residential or commercial installations.*





Model	Indoor Unit / Outdoor Unit		FTX30NVJU / RX30NMVJUA		FTX36NVJU / RX36NMVJUA	
			Cooling	Heating	Cooling	Heating
Capacity Rated		Btu/h	31,400	34,800	34,400	36,000
(Min. ~ Max.)			(10,200 ~ 31,400)	(10,200 ~ 34,800)	(10,200 ~ 34,400)	(10,200 ~ 36,000)
Moisture Removal		gal/h	N/A	—	N/A	—
COP Rated			2.92		2.78	
EER Rated			9.85		9.1	
SEER			17.5		15.9	
HSPF			9.3		9.2	
Piping Connections	Liquid	in. (mm)	Ø 1/4 (Ø 6.4)			
	Gas		Ø 5/8 (Ø 16.0)			
	Drain		Ø 5/8 (Ø 16.0)			
Max. Interunit Piping Length		ft. (m)	98-2/5 (29.8)			
Max. Interunit Height Difference			65-5/8 (20)			
Chargeless			32-4/5 (9.8)			
Amount of Additional Charge of Refrigerant		oz/ft (g/m)	0.32 (30)			
Operating Range - Cooling		°F DB	50° – 115°F			
Operating Range - Enhanced Cooling**			14° - 115°F			
Operating Range - Low Ambient Cooling***			-4° - 115°F			
Operating Range - Heating*		°F WD	5° - 65°F			
Indoor Unit			**FTX30NVJU**		**FTX36NVJU**	
Airflow Rate	H	cfm (m³/min)	890 (25.2)	960 (27.2(	915 (25.9)	960 (27.2)
	M		727 (20.6)	791 (22.4)	742 (21.0)	791 (22.4)
	L		572 (16.2)	629 (17.8)	572 (16.2)	629 (17.8)
	SL		512 (14.5)	544 (15.4)	512 (14.5)	544 (15.4)
Fan	Speed	Steps	5 Steps, Quiet, Auto			
Air Direction Control			Right, Left, Horizontal, Downward			
Air Filter			Removable, Washable			
Dimensions (H × W × D)		in. (mm)	13-3/8 x 47-1/4 x 10-3/16 (340 x 1,200 x 259)			
Weight		lbs. (kg)	38 (17)			
Sound Pressure Level (H / M / L / SL)		dB(A)	53 / 47 / 40 / 37	53 / 46 / 38 / 35	54 / 47 / 40 / 37	53 / 46 / 38 /
Outdoor Unit			**RX30NMVJUA**		**RX36NMVJUA**	
Compressor	Motor Output	W	1,920		1,920	
Refrigerant	Type		R-410A			
	Charge	lbs. (kg)	3.64 (1.65)		3.64 (1.65)	
Airflow Rate	H	cfm (m³/min)	2,528 (71.6)	2,274 (64.4)	2,811 (79.6)	2,352 (66.6)
	SL		—	—	—	—
Dimensions (H × W × D)		in. (mm)	28-15/16 x 34-1/4 x 12-5/8 (735 x 870 x 320)			
Weight		lbs. (kg)	133 (60)		133 (60)	
Sound Pressure Level	H	dB(A)	56	58	59	
ENERGY STAR® Certified			NO		NO	

*Applicable to heat pump models only, refer to installation manual for more details.

** Activated with a dipswitch setting. Refer to installation manual for more details.

*** Activated with a dipswitch setting and use of air direction adjustment grille (KPW063B4). Refer to installation manual for more details.

Unit Combination		Power Supply				Compressor	OFM		IFM	
Indoor Unit	Outdoor Unit	Hz - Volts	Voltage Range	MCA	MOP	RLA	W	FL	W	FLA
FTX30NVJU	RX30NMVJUA	60 - 208	Min. 187 V Max. 253 V	19.8	20	18.25	93	0.62	64	0.37
		60 - 230								
FTX36NVJU	RX36NMVJUA	60 - 208	Min. 187 V Max. 253 V	19.8	20	18.25	123	0.83	64	0.37
		60 - 230								

DAIKIN LV 30/36 WALL-MOUNT

Cooling Only (Up to 19.3 SEER | Up to 10.7 HSPF)





Model	Indoor Unit		FTXS30LVJU	FTXS36LVJU
	Outdoor Unit		RKS30LVJU	RKS36LVJU
Capacity Rated		Btu/h	30,000	36,000
(Min. ~ Max.)			(10,200 ~ 30,000)	(10,200 ~ 36,000)
Moisture Removal		gal/h	1.5	1.8
EER Rated			10.71	8.35
SEER			19.3	17.9
Piping Connections	Liquid	in. (mm)	Ø 3/8 (Ø 9.5)	
	Gas		Ø 5/8 (Ø 16.0)	
	Drain		Ø 5/8 (Ø 16.0)	
Max. Interunit Piping Length		ft. (m)	98-1/2 (30)	
Max. Interunit Height Difference			65-5/8 (20)	
Chargeless			32 (10)	
Amount of Additional Charge of Refrigerant		oz/ft (g/m)	0.54 (20)	
Operating Range - Cooling		°F DB	50° – 115°F	
Operating Range - Low-Ambient Cooling*			14° – 115°F	
Operating Range - Cooling with Optional Air Adjustment Grille*			0° – 115°F	
Operating Range - Cooling with Ultra Low-Ambient kit and Optional Air Adjustment Grille			-40° – 115°F	
Indoor Unit			**FTXS30LVJU**	**FTXS36LVJU**
Airflow Rate	H	cfm (m³/min)	706 (20)	770 (21.8)
	M		611 (17.3)	635 (18.0)
	L		519 (14.7)	519 (14.7)
	SL		473 (13.4)	473 (13.4)
Fan	Speed	Steps	5 Steps, Quiet, Auto	
Air Direction Control			Right, Left, Horizontal, Downward	
Air Filter			Removable, Washable	
Dimensions (H × W × D)		in. (mm)	13-3/8 x 47-1/4 x 9-7/16 (340 x 1,200 x 240)	
Weight		Lbs (kg)	38 (17)	
Sound Pressure Level (H / M / L / SL)		dB(A)	47/45/40/37	49/45/40/37
Outdoor Unit			**RKS30LVJU**	**RKS36LVJU**
Compressor	Motor Output	W	2,030	
Refrigerant	Type		R-410A	
	Charge	Lbs (kg)	6.17 (2.8)	
Airflow Rate	H	cfm (m³/min)	2,627 (74.4)	
	SL		2,316 (65.6)	2,316 (65.6)
Dimensions (H × W × D)		in. (mm)	38-15/16 × 37 × 12-5/8 (990 x 940 x 320)	
Weight		Lbs (kg)	179 (81)	
Sound Pressure Level	H	dB(A)	54	
ENERGY STAR® Certified			NO	NO

* Cutting a jumper or a dipswitch setting is required. Refer to installation manual.

Unit Combination		Power Supply				Compressor	OFM		IFM	
Indoor Unit	Outdoor Unit	Hz - Volts	Voltage Range	MCA	M	RLA	W	FLA	W	FLA
FTXS30LVJU	RKS30LVJU	60 - 208	Min. 187 V Max. 253 V	19.5	20	13.5	200	0.39	64	0.37
		60 - 230				12.2		0.35		0.34
FTXS36LVJU	RKS36LVJU	60 - 208	Min. 187 V Max. 253 V	19.5	20	18.9	200	0.39	64	0.37
		60 - 230				18.4		0.35		0.34

MULTI-ZONE SYSTEM

Zoned Comfort Control

Homeowners fight over temperatures in their homes and have rooms that go unused for long periods. Now they can save energy and control temperatures independently in up to eight separate zones with a single outdoor unit. With available wall-mounted, concealed slim-duct, ceiling cassette, and floormounted indoor options, Daikin Multi-Zone Systems offer multiple indoor unit styles to meet all home comfort needs.

Heat or cool multiple spaces independently with 1 outdoor unit

- Great installation flexibility and a wide choice of styles.
- Wide range of outdoor units, to which up to 8 indoor units can be connected.
- All indoor units can be individually controlled.
- The discrete, robust outdoor unit can easily be mounted onto a roof or terrace, or simply to the outside wall.
- It is possible to combine different types of indoor units.

Compatible Indoor



Daikin EMURA - Designed to perfectly balance technological capability and the beauty of aerodynamics

- Iconic award winning design and engineering excellence
- Elegant finish in pure matte white or modern silver
- Two-area intelligent eye sensor controls comfort and allows for energy savings during unoccupied periods
- Titanium apatite photo-catalytic air purification

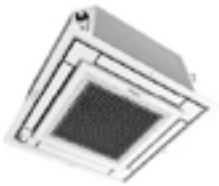

Daikin VISTA - Unique design that integrates seamlessly into the ceiling

- Iconic award wining design and engineering excellence
- Elegant finish in white or silver / white combination
- DC fan motor and two optional intelligence sensors for energy efficiency
- Outside air integration possible of up to 2-3% of the nominal indoor air volume



FTXS - Discreet wall-mounted unit providing high efficiency and comfort

- Discreet, stylish front panel blends easily with the wall, and matches all interior decors
- Dry program allows humidity levels to be reduced without variations in room temperature
- Intelligent Eye function reduces heating or cooling operation during unoccupied periods



FVXS - Floor mounted unit for optimal heating comfort thanks to dual airflow

- Its low height enables the unit to fit beneath a window
- Can be installed against a wall or recessed
- Vertical auto swing moves the louver up and down for efficient air and temperature distribution



FDMQ - Ducted concealed unit capable of up to .6 esp

- Higher external static pressure capabilities allow for longer duct runs and easily implementing up to MERV 13 filters (compared to units with lower static pressure)
- Drain Pan inspection port makes it easy to observe drain pan conditions
- Rear or bottom return air configurations for installation flexibility
- Outside air integration possible



FDXS/CDXS - Slim duct concealed ceiling unit capable of up to 0.18 esp

- External static pressure facilitates unit's use with minimal length of duct runs
- Discretely concealed in the ceiling: only the suction and discharge grills are visible
- DC fan motor for low energy consumption

DAIKIN AURORA

Multi-Zone Systems Outdoor Units (Up to 21.7 SEER | Up to 12.5 HSPF)

*Proper sizing and installation of equipment is critical to achieve optimal performance. Split system air conditioners and heat pumps must be matched with appropriate coil components to meet **ENERGY STAR®** criteria. Ask your contractor for details or visit www.energystar.gov.*

Model			2MXL18QMVJU(A)		3MXL24RMVJU(A)		4MXL36TVJU	
			Cooling	Heating	Cooling	Heating	Cooling	Heating
Capacity Rated		Btu/h	18,000	18,900	24,000	24,100	34,400	36,600
COP Rated**			—	4.20	—	4.56	—	4.25
EER Rated			See Performance Table below					
SEER / HSPF								
Compressor	Motor Output	W	1,920				3,000	
Refrigerant	Type		R-410A					
	Charge	lbs.	6.17 (2.8)				8.60 (3.9)	
Airflow Rate	H	cfm (m³/min)	2,150 (60.9)	1,963 (55.6)	2,094 (59.3)	1,886 (53.4)	3,684 (104.3)	3,356 (95)
	M		2,150 (60.9)	1,963 (55.6)	2,094 (59.3)	1,780 (50.4)	3,029 (85.8)	3,138 (88.9)
	L		1,949 (55.2)	1,006 (28.5)	1,977 (56.0)	1,006 (28.5)	2,756 (78)	1,500 (42.5)
Fan	Motor Output	W	51		58		84	
	Running Current	A	H: 0.32 / M: 0.32 / L: 0.27	H: 0.33 / M: 0.33 / L: 0.07	H: 0.38 / M: 0.38 / L: 0.33	H: 0.38 / M: 0.33 / L:	H: 1.49 / M:1.09 / L: 0.94	H: 1.28 / M: 1.15 / L: 0.38
	Power Consumption	W	H: 62 / M: 62 / L: 54	H: 65 / M: 65 / L: 14	H: 75 / M: 75 / L: 65	H: 75 / M: 65 / L: 14	H: 158.5 / M: 93.3 / L: 73.2	H: 122.9 / M: 102.5 / L: 34.9
Starting Current		A	15.5		17.5		27.0	
Dimension (H × W × D)		in. (mm)	28-15/16 × 34-1/4 × 12-5/8 (735 × 870 × 320)				34-1/4 x 43-5/16 x 18-1/8 (870 x 1,100 x 460)	
Weight		lbs.	139 (63)		140 (63)		214 (97)	
Sound Pressure Level		dB(A)	50	51	52	54	53	55
Piping Connections	Liquid	in. (mm)	Ø 1/4 × 2 (Ø 6.4 ×		Ø1/4 × 3 (Ø 6.4 × 3)		Ø1/4 × 4 (Ø 6.4 × 4	
	Gas		3/8 x 1, ½ x 1		Ø 3/8 × 1, Ø 1/2 × 2 (Ø 9.5 × 1, Ø 12.7 × 2)		Ø 3/8 × 1, Ø 1/2 × 2, Ø 5/8 × 1 (Ø 9.5 × 1, Ø 12.7 × 2, Ø 15.9 × 1)	
	Drain		Ø 5/8 (Ø				Ø 1 (Ø 25)	
Max. Interunit Piping Length		ft. (m)	164 (50) (for Total of Each Room)	15.9)	230 (70) (for Total of Each Room)			
			82 (25) (for One Room)				98 (30) (for One Room)	
Amount of Additional Charge of Refrigerant		oz/ft (g/m)	0.21 (20) (98-7/16 ft (30 m) or more)		0.21 (20) (131-1/4 ft (40 m) or more)			
Max. Installation Height Difference		ft. (m)	49-1/4 (15) (between Indoor Unit and Outdoor Unit)					
			24-5/8 (7.5) (between Indoor Units)					
Operating Range - Cooling		°F DB	14° - 115°F					
Operating Range - Heating		°F WB	-13° - 60°F					
ENERGY STAR® Certified			**	*	*		*	

* ENERGY STAR® Most Efficient 2022 recognition is achieved when used with the Daikin One+ smart thermostat and non-ducted indoor units. Products that are recognized as the Most Efficient of ENERGY STAR in 2022 prevent greenhouse gas emissions by meeting rigorous energy efficiency performance levels set by the U.S. Environmental Protection Agency.
**With non-ducted indoor units. 3MXL24RMVJUA multi-zone systems are not ENERGY STAR Certified.

Outdoor Unit	Power Supply				Compressor		OFM	
	Hz - Volts	Voltage Range	MCA	MOCP	MSC	RLA	W	FLA
2MXL18QMVJU(A)	60 - 208 60 - 230	Min. 187 V Max. 253 V	17.1	20	15.5	15.5	51	0.33
3MXL24RMVJU(A)	60 - 208 60 - 230	Min. 187 V Max. 253 V	22.6	25	17.5	17.5	122	0.42
4MXL36TVJU	60 - 208 60 - 230	Min. 187 V Max. 253 V	32.5	35	–	27	84	1.15

Performance					
	Model	Connected to	SEER	EER	HSPF
Daikin AURORA Performance	2MXL18QMVJU(A)	Non-Ducted	17	12.7	10.3
	2MXL18QMVJU(A)	Ducted	14	10.1	8.2
	2MXL18QMVJU(A)	Mixed	15.5	11.4	9.25
	3MXL24RMVJU(A)	Non-Ducted	18	12.7	12.5
	3MXL24RMVJU(A)	Ducted	14	9.9	8.2
	3MXL24RMVJU(A)	Mixed	16	11.3	10.35
	4MXL36TVJU	Non-Ducted	21.7	12.5	11.2
	4MXL36TVJU	Ducted	16.9	11	9.1
	4MXL36TVJU	Mixed	19.3	11.75	10.15



4MXL

DAIKIN MXS SERIES

Multi-Zone Systems Outdoor Units (Up to 20.2 SEER | Up to 12.5 HSPF)

*Proper sizing and installation of equipment is critical to achieve optimal performance. Split system air conditioners and heat pumps must be matched with appropriate coil components to meet **ENERGY STAR®** criteria. Ask your contractor for details or visit www.energystar.gov.*

Model			2MXS18NMVJU(A)		3MXS24RMVJU(A)		4MXS36RMVJU(A)		5MXS48TVJU	
			Cooling	Heating	Cooling	Heating	Cooling	Heating	Cooling	Heating
Capacity Rated		Btu/h	18,000	18,900	24,000	24,000	36,000	36,000	47,000	48,500
COP Rated*			—	4.1	—	4.6	—	4.5	—	3.90
EER Rated			-							
SEER / HSPF										
Compresso	Motor	W	1,100		1,920				3,000	
Refrigerant	Type		R-410A							
	Charge	lbs. (kg)	3.86 (1.75)		6.17 (2.8)				8.60 (3.9)	
Airflow Rate	H	cfm (m³/min)	2,150 (60.9)	2,150 (60.9)	2,094 (59.3)	2,094 (59.3)	2,613 (74.0)	2,351 (66.6)	3,684 (104.3)	3,356 (95)
	M		2,150 (60.9)	2,150 (60.9)	2,094 (59.3)	1,981 (56.1)	2,440 (69.1)	2,210 (62.6)	3,029 (85.8)	3,138 (88.9)
	L		1,953 (55.3)	1,953 (55.3)	1,981 (56.1)	1,119 (31.7)	1,727 (48.9)	1,119 (31.7)	2,756 (78)	1,500 (42.5)
Fan	Motor	W	56		51		75		84	
	Running Current	A	H: 0.29 / M: 0.29 / L: 0.25	H: 0.29 / M: 0.29 /	H: 0.28 / M: 0.28 /	H: 0.28 / M: 0.26 /	H: 0.52 / M: 0.40 /	H: 0.38 / M: 0.32 /	H: 1.49 / M: 1.09 / L: 0.94	H: 1.28 / M: 1.15 / L: 0.38
	Power Con-	W	H: 65 / M: 65 / L: 58	H: 66 / M: 66 / L: 12	H: 63 / M: 63 / L: 59	H: 63 / M: 59 / L: 12	H: 116 / M: 90/ L: 61	H: 85 / M: 72 / L: 14	H: 158.5 / M: 93.3 / L: 73.2	H: 122.9 / M: 102.5 /
Starting Current		A	14.0		15.5		17.5		27	
Dimension (H × W × D)		in. (mm)	28-15/16 × 34-1/4 × 12-5/8 (735 × 870 × 320)						34-1/4 x 43-5/16 x 18-1/8 (870 x 1,100 x 460)	
Weight		lbs. (kg)	123 (56)		137 (62)		139 (63)		216 (98)	
Piping Connections	Liquid	in. (mm)	Ø 1/4 × 2 (Ø 6.4 × 2)		Ø 1/4 × 3 (Ø 6.4 × 3)		Ø 1/4 × 4 (Ø 6.4 × 4)		Ø 1/4 × 5 (Ø 6.4 × 5)	
	Gas		Ø 3/8 × 1, Ø 1/2 × 1 (Ø 9.5 × 2, Ø 12.7 × 1)		Ø 3/8 × 1, Ø 1/2 × 2 (Ø 9.5 × 1, Ø 12.7 × 2)		Ø 3/8 × 1, Ø 1/2 × 2, Ø 5/8 × 1 (Ø 9.5 × 1, Ø 12.7 × 2, Ø 15.9		Ø 3/8 × 1, Ø 1/2 × 2, Ø 5/8 × 2 (Ø 9.5 × 1, Ø 12.7 × 2, Ø 15.9 × 2)	
	Drain		Ø 11/16 (Ø 15.9)		Ø 11/16 (Ø 15.9)				Ø 1 (Ø 25)	
Max. Interunit Piping Length		ft. (m)	164 (50) (for Total of Each Room)		230 (70) (for Total of Each Room)				262 (80) (for Total of Each Room)	
			82 (25) (for One Room)		82 (25) (for One Room)				98 (30) (for One Room)	
Amount of Additional Charge of Refrigerant		oz/ft. (g/m)	0.21 (20) (98-3/8 ft (30 m) or more)		0.21 (20) (131-1/4 ft (40 m) or more)					
Max. Installation Height Difference		ft. (m)	49-1/4 (15) (between Indoor Unit and Outdoor Unit)							
			24-5/8 (7.5) (between Indoor Units)							
Operating Range -		°F DB	14° - 115°F							
Operating Range -		°F WB	5° - 60°F							
ENERGY STAR® Certified							NO		NO	



5MXS

DAIKIN CIRRA WALL MOUNTED

Multi-Zone Systems Indoor Units (17 SEER | 9 HSPF | 10 EER)





Model			CTX07AXVJU		CTX09AXVJU		CTX12AXVJU	
			Cooling	Heating	Cooling	Heating	Cooling	Heating
Nominal Capacity			7 kBtu/h Class		9 kBtu/h Class		12 kBtu/h Class	
Front Panel Color			White		White		White	
Airflow Rate	H	cfm (m3/min)	310 (8.7)	310 (8.7)	350 (9.9)	350 (9.9)	430 (12.2)	430 (12.2)
	M		280 (7.9)	280 (7.9)	300(8.5)	300(4.5)	340 (9.6)	340 (9.6)
	L		249 (7.0)	249 (7.0)	249(7.1)	249(7.1)	249 (7.1)	249 (7.1)
	SL		142 (4.02)	195 (5.5)	142 (4.02)	195 (5.5)	142 (4.02)	195 (5.5)
Fan	Motor Output	W	53					
	Speed	Steps	3 Steps, Quiet, Auto					
Air Direction Control			Right, Left, Horizontal, Downward					
Air Filter			Removable, Washable					
Power Consumption (Rated)		W	38					
Dimensions (H x W x D)		in. (mm)	11-1/3 x 30-29/32 x 9-27/32 (288 x 785 x 250)					
Weight (Mass)		lbs. (kg)	20 (9)					
Sound Pressure	H / M / L / SL	dB(A)	37 / 33 / 30 / 19	36 / 32 / 29 / 24	42 / 36 / 30 / 19	41 / 35 / 29 / 24	46 / 39 / 30 / 19	45 / 38 / 29 / 24
Piping Connections	Liquid	in.(mm)	Ø 1/4 (Ø 6.4)					
	Gas		Ø 3/8 (Ø 9.5)					
	Drain		Ø 3/4 (Ø 19)					

Model			2MX18AXVJU	
			Cooling	Heating
Capacity Rated		kW	17.000	17.000
COP Rated (Min. - Max.)			3,000-17,500	2,500 - 18,000
EER Rated (Min. - Max.)			10	—
SEER / hspf			17	9
Compressor	Motor Output	W		
Refrigerant	Type		R-410A	
	Charge	Lbs (kg)	2.65 (1.2)	
Airflow Rate	H	cfm (m³/min)	1170 (33.1)	1,300 (36.8)
Fan	Motor Output	W	25	
	Running Current	A	0.37	0.44
	Power Consumption	W	51	64
Starting Current		A	9.5	
Dimension (H × W × D)		in. (mm)	21-11/16 × 26-1/2 × 11-3/16 (550 × 673 × 284)	
Weight		Lbs (kg)	77 (35)	
Sound Pressure Level		dB(A)	51/56	
Piping Connections	Liquid	in. (mm)	1/4 x 2	
	Gas		3/8 x 2	
	Drain			
Max. Interunit Piping Length		ft (m)	98-1/2 (30) (for Total of Each Room) 82 (25) (for One Room)	
Amount of Additional Chargeof Refrigerant		oz/ft (g/m)		
Max. Installation Height Difference		ft (m)	49-1/4 (15) (between Indoor Unit and Outdoor Unit) 24-5/8 (7.5) (between Indoor Units)	
Operating Range - Cooling		°F DB	50 ° - 115 °F	
Operating Range - Heating		°F WB	5° - 64.4°F	
ENERGY STAR® Certified*			No	

*Proper sizing and installation of equipment is critical to achieving optimal performance. Split system air conditioners and heat pumps must be matched with appropriate coil components to meet ENERGY STAR criteria. Ask your contractor for details or visit www.energystar.gov.

DAIKIN RMXS_LVJU AND BPMKS_A

Multi-Zone Systems Outdoor Units (Up to 18.8 SEER | Up to 11.3 HSPF)

Model			RMXS48LVJU	
			Cooling	Heating
Capacity		Btu/h	48,000	54,000
COP Rated*			3.9	
EER Rated SEER / HSPF			See Performance Table below	
Compressor	Motor Output	kW	3	
Refrigerant	Type		R-410A	
	Charge	lbs. (kg)	8.8 (4.0)	
Fan	Motor Output	kW	0.070 x 2	
	Airflow rate	cfm	3740	
Dimension (H × W × D)		in. (mm)	52-15/16 x 35-7/16 x 12-5/8 (1,345 x 900 x 320)	
Weight		lbs. (kg)	283 (129)	
Piping Connections	Liquid	in. (mm)	3/8 (9.5) C1220T (Flare Connection)	
	Gas		3/4 (19.1) C1220T (Brazing Connection)	
Operating Range - Cooling		°F DB	23° - 115°F	
Operating Range - Heating		°F WB	5° - 60°F	

* With non-ducted indoor units





Model				BPMKS048A2	BPMKS049A3U
Power Consumption			W	10	10
Running Current			A	0.05	0.05
Refrigerant Type				R-410A	
Heat insulation				Both Liquid and Gas Pipes	
Min. Combination			Btu/h	7,000	
Max. Combination			Btu/h	48,000	62,000
Dimension (H × W × D)			in. (mm)	7-1/16 x 11-9/16 [26-11/16]* 13-3/4 (180 x 294 [678]* x 350)	
Weight			lbs. (kg)	18 (8)	20 (9)
Piping Connections	Liquid	O.U. side	in. (mm)	Ø 3/8 (Ø 9.5) x 1	
		I.U. side		Ø 1/4 (Ø 6.4) x 2	Ø 1/4 (Ø 6.4) x 3
	Gas	O.U. side		Ø 5/8 (Ø 15.9) x 1	
		I.U. side		Ø 5/8 (Ø 15.9) x	Ø 5/8 (Ø 15.9) x 3

[ ]* :including auxiliary piping length

Unit Combination		Power Supply					Compressor		OFM	
Outdoor Unit	Hz - Volts	Voltage Range	Min	Max	MCA	MOCP	MSC	RLA	W	FLA
RMXS48LVJU	60	208	187	229	27.0	30	23.7	22.7	70 x 2	0.3 x 2
		230	207	253			21.5	20.5	70 x 2	0.3 x 2

MXS series Performance		SEER	EER	HSPF
RMXS48LVJU	Non-Ducted	18.8	10.3	11.3
	Ducted	14.1	9.3	9.6
	Mixed	16.45	9.8	10.45

Simplified Electrial Wiring

The outdoor unit and BP units operate from separate 208/230V single-phase power supplies. Indoor units are powered from the BP unit and wired as Daikin's current 4 wire single split systems reducing the wiring size and easing installation.

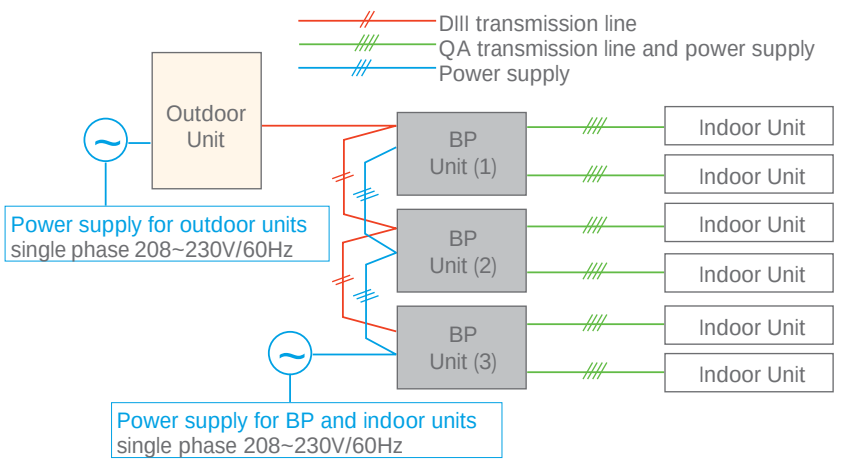

SKYAIR

- Energy-Intelligent technology with variable-speed compressors for small offices, shops, retail, stores,restaurants, banks, or technical cooling
- Provides reliable and high quality comfort with a smart use of energy and flexible installation and operation
- Can provide total comfort over space heating and cooling needs

Wide range of simple and/or intelligent controllers to choose from


Adaptive Touch Controller - New!


BRC1H71W


BRC1E73


BRC4C82
BRC7E83
BRC7E818


AZAI6WSCDKA


DTST-ONE-ADA-A


AZAI6WSPDKC


AZAI6WSPDKC

☐ Available in Heat Pump
■ Available in Cooling Only

Indoor Unit name	Sizes available (rated Cooling kBTU/h) 18	24	30	36	42	48	Matching Outdoor Units
 FAQ_TAVJU	■ ☐	■ ☐					RZR_TAVJUA (Cooling Only) RZQ_TAVJUA (Heat Pump) 
 FBQ_PVJU	■ ☐	■ ☐	■ ☐	■ ☐	■ ☐	■ ☐	RZR_TAVJUA (Cooling Only) RZQ_TAVJUA (Heat Pump) 
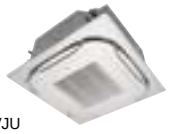 FCQ_TAVJU	■ ☐	■ ☐	■ ☐	■ ☐	■ ☐	■ ☐	RZR_TAVJUA (Cooling Only) RZQ_TAVJUA (Heat Pump) 
 FHQ_PVJU FHQ_MVJU*	■ ☐	■ ☐	■ ☐	■ ☐ *	■ ☐ *		RZR_TAVJUA (Cooling Only) RZQ_TAVJUA (Heat Pump) 
 FTQ_TAVJUD/A	■ ☐	■ ☐	■ ☐	■ ☐	■ ☐	■ ☐	RZR_TAVJUA (Cooling Only) RZQ_TAVJUA (Heat Pump) 

DAIKIN RESIDENTIAL AIR CONDITIONERS

DAIKIN

DAIKIN

DC3SE

ENERGY-EFFICIENT
R-32 SPLIT SYSTEM AIR CONDITIONER
UP TO 15 SEER2
1½ TO 5 TONS



R32

Standard Features

- High efficiency scroll compressor
- High-density foam compressor sound blanket
- Advanced Copeland® CoreSense™ Technology
- Fully charged for 15' of tubing length
- Copper tube/ enhanced aluminum fin coil 5mm diameter
- Factory-installed filter drier
- Sweat connection service valves with easy access to gauge ports
- Enclosed contactor
- High-pressure switch
- Ground lug connection
- Capacitors with extended life
- AHRI Certified
- ETL Listed

Cabinet Features

- Removable grille-style top design compliant with UL 60335-2-40
- Venturi for increased velocity of airflow
- Custom Nickel Gray powder-paint finish
- 500-hour salt-spray tested
- Wire fan discharge grille
- Steel louver coil guard
- Top and side maintenance access
- Single-panel access to controls with space provided for field-installed accessories
- When properly anchored, meets the 2023 Florida Building Code unit integrity requirements for hurricane-type winds (Anchor bracket kits available.)

6 YEAR UNIT REPLACEMENT LIMITED WARRANTY

12 YEAR* PARTS LIMITED WARRANTY

C ETL LISTED US Intertek

* Complete warranty details available from your local dealer or at www.daikincomfort.com. To receive the 6-Year Unit Replacement Limited Warranty and 12-Year Parts Limited Warranty, online registration must be completed within 60 days of installation. Additional requirements for annual maintenance are required for the Unit Replacement Limited Warranty. Online registration and some of the additional requirements are not required in California or Québec. The duration of warranty coverage in Texas and Florida differs in some cases.

DAIKIN RESIDENTIAL AIR CONDITIONERS

DAIKIN

DC3SEN SPECIFICATION

NOMENCLATURE

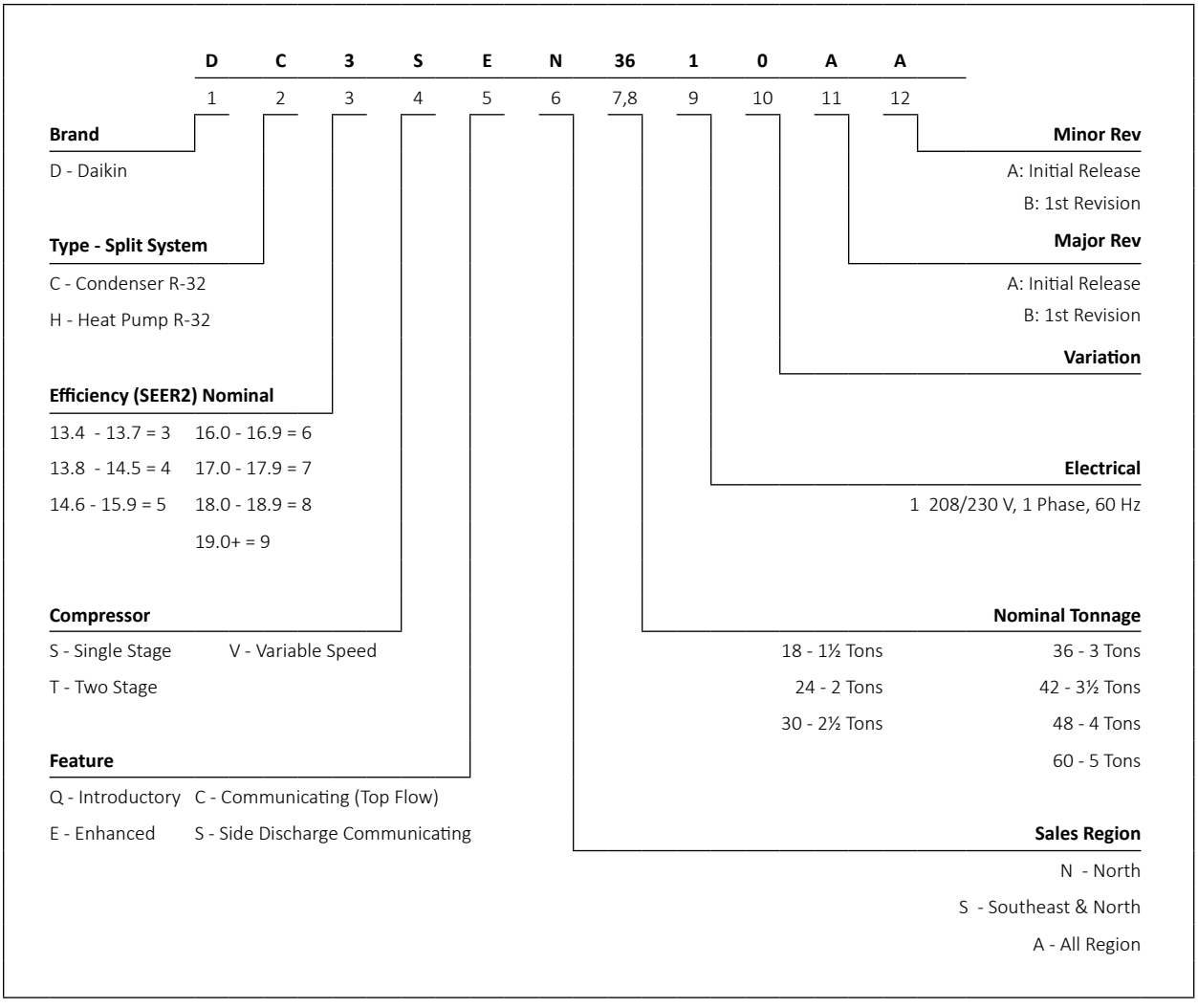

	DC3SEN 1810A*	DC3SEN 2410A*	DC3SEN 3010A*	DC3SEN 3610A*	DC3SEN 4210A*	DC3SEN 4810A*	DC3SEN 6010A*
COOLING CAPACITY							
Nominal Cooling (BTU/h)	18,000	24,000	30,000	36,000	42,000	48,000	60,000
Decibels (dBA)	72.0	68.0	68.0	69.0	73.0	71.0	74.0
COMPRESSOR							
RLA	8.3	10.2	11.5	13.4	14.4	19.4	23.9
LRA	44.3	59.3	66.3	83.3	112.2	127.7	148.0
Stage	Single	Single	Single	Single	Single	Single	Single
Type	Scroll	Scroll	Scroll	Scroll	Scroll	Scroll	Scroll
CONDENSER FAN MOTOR							
Motor Type	PSC	PSC	PSC	PSC	PSC	PSC	PSC
Horsepower (RPM)	1/8	1/8	1/8	1/8	1/4	1/4	1/4
FLA	0.70	0.70	0.70	0.70	1.4	1.4	1.3
REFRIGERATION SYSTEM							
Refrigerant Line Size[1]							
Liquid Line Size ("O.D.)	⅜"	⅜"	⅜"	⅜"	⅜"	⅜"	⅜"
Suction Line Size ("O.D.)	¾"	¾"	¾"	⅞"	1⅛"	1⅛"	1⅛"
Refrigerant Connection Size							
Liquid Valve Size ("O.D.)	⅜"	⅜"	⅜"	⅜"	⅜"	⅜"	⅜"
Suction Valve Size ("O.D.)[2]	¾"	¾"	¾"	⅞"	⅞"	⅞"	⅞"
Valve Connection Type	Sweat	Sweat	Sweat	Sweat	Sweat	Sweat	Sweat
Refrigerant Charge[3]	52	53.4	54.6	60	74	84	91
ELECTRICAL DATA							
Voltage-Phase	208/230-1	208/230-1	208-230-1	208/230-1	208/230-1	208/230-1	208/230-1
Minimum Circuit Ampacity[4]	11.1	13.5	15.1	17.5	19.4	25.6	31.1
Max. Overcurrent Protection[5]	15.0	15.0	25.0	30.0	30.0	40.0	50.0
Min / Max Volts	197/253	197/253	197/253	197/253	197/253	197/253	197/253
Electrical Conduit Size	½" or ¾"	½" or ¾"	½" or ¾"	½" or ¾"	½" or ¾"	½" or ¾"	½" or ¾"
Equipment Weight (lbs)	125	126	137	136	180	188	229
Ship Weight (lbs)	140	141	152	151	195	203	244

[1] Line sizes denoted for 25' line sets, tested and rated in accordance with AHRI Standard 210/240. For other line set lengths or sizes, refer to the Installation Instructions and/or the Long Line Set Applications guide.

[2] Any suction line adapter will need to be supplied by the field.

[3] Unit is factory charged with refrigerant for 15' of ⅜" liquid line. System charge must be adjusted per the Final Charge Adjustment procedure found in the Installation Instructions.

[4] Wire size should be determined in accordance with National Electrical Codes; extensive wire runs will require larger wire sizes

[5] Must use time-delay fuses or HACR-type circuit breakers of the same size as noted.

NOTES

- Always check the S&R plate for electrical data on the unit being installed.

			Outdoor Ambient Temperature																							
			65				75				85				95				105				115			
			Entering Indoor Wet Bulb Temperature																							
IDB	Airflow		59	63	67	71	59	63	67	71	59	63	67	71	59	63	67	71	59	63	67	71	59	63	67	71
70	525	MBh	18.6	18.8	19.4	-	18.4	18.6	19.2	-	17.9	18.2	18.7	-	17.1	17.3	17.9	-	16.1	16.3	16.9	-	15.2	15.4	16.0	-
		S/T	0.63	0.55	0.43	-	0.63	0.56	0.43	-	0.66	0.58	0.46	-	1.00	0.60	0.48	-	1.00	0.62	0.50	-	1.00	0.67	0.54	-
		ΔT	20	18	15	-	20	18	15	-	21	19	15	-	20	18	15	-	20	18	14	-	21	19	16	-
		kW	1.20	1.20	1.19	-	1.32	1.32	1.32	-	1.47	1.47	1.46	-	1.62	1.62	1.62	-	1.80	1.79	1.79	-	2.00	2.00	1.99	-
		Amps	4.2	4.2	4.2	-	4.8	4.8	4.8	-	5.5	5.5	5.5	-	6.2	6.2	6.2	-	7.0	7.0	7.0	-	7.9	7.9	7.9	-
	600	MBh	18.9	19.1	19.7	-	18.7	19.0	19.5	-	18.2	18.5	19.1	-	17.4	17.7	18.2	-	16.4	16.7	17.2	-	15.5	15.8	16.3	-
		S/T	0.66	0.59	0.46	-	0.67	0.60	0.47	-	0.69	0.62	0.49	-	1.00	0.64	0.51	-	1.00	0.66	0.53	-	1.00	0.71	0.58	-
		ΔT	19	17	13	-	19	17	13	-	19	17	14	-	19	17	13	-	19	17	13	-	20	18	14	-
		kW	1.20	1.20	1.20	-	1.33	1.33	1.33	-	1.47	1.47	1.47	-	1.63	1.63	1.63	-	1.80	1.80	1.80	-	2.00	2.00	2.00	-
		Amps	4.3	4.3	4.2	-	4.8	4.8	4.8	-	5.5	5.5	5.5	-	6.2	6.2	6.2	-	7.0	7.0	7.0	-	7.9	7.9	7.9	-
	675	MBh	19.3	19.6	20.1	-	19.1	19.4	19.9	-	18.7	18.9	19.5	-	17.8	18.1	18.6	-	16.8	17.1	17.6	-	15.9	16.2	16.7	-
		S/T	0.67	0.60	0.47	-	0.67	0.60	0.48	-	1.00	0.63	0.50	-	1.00	0.64	0.52	-	1.00	0.67	0.54	-	1.00	1.00	0.59	-
		ΔT	18	16	12	-	18	16	12	-	18	16	13	-	18	16	12	-	18	16	12	-	19	17	13	-
		kW	1.21	1.21	1.20	-	1.34	1.34	1.33	-	1.48	1.48	1.48	-	1.63	1.63	1.63	-	1.81	1.81	1.80	-	2.01	2.01	2.01	-
		Amps	4.3	4.3	4.3	-	4.9	4.9	4.9	-	5.5	5.5	5.5	-	6.2	6.2	6.2	-	7.0	7.0	7.0	-	8.0	8.0	7.9	-
75	525	MBh	18.6	18.8	19.4	20.2	18.4	18.7	19.2	20.0	17.9	18.2	18.7	19.6	17.1	**17.4**	17.9	18.7	16.1	16.4	16.9	17.7	15.2	15.4	16.0	16.8
		S/T	0.75	0.68	0.55	0.4	1.00	0.68	0.55	0.4	1.00	0.71	0.58	0.4	1.00	**0.72**	0.60	0.5	1.00	0.74	0.62	0.5	1.00	1.00	0.67	0.5
		ΔT	25	23	19	15	25	23	19	15	25	23	19	15	25	**23**	19	15	24	22	19	15	26	24	20	16
		kW	1.20	1.19	1.19	1.2	1.32	1.32	1.32	1.3	1.47	1.47	1.46	1.5	1.62	**1.62**	1.62	1.6	1.79	1.79	1.79	1.8	2.00	2.00	1.99	2.0
		Amps	4.2	4.2	4.2	4.3	4.8	4.8	4.8	4.8	5.5	5.5	5.5	5.5	6.2	**6.2**	6.2	6.2	7.0	7.0	7.0	7.0	7.9	7.9	7.9	7.9
	600	MBh	18.9	19.2	19.7	20.5	18.7	19.0	19.5	20.4	18.3	18.5	19.1	19.9	17.4	17.7	18.2	19.1	16.4	16.7	17.2	18.1	15.5	15.8	16.3	17.2
		S/T	0.78	0.71	0.58	0.4	1.00	0.72	0.59	0.5	1.00	0.74	0.61	0.5	1.00	0.76	0.63	0.5	1.00	1.00	0.65	0.5	1.00	1.00	0.70	0.6
		ΔT	24	22	18	14	23	21	18	14	24	22	18	14	23	21	18	14	23	21	17	14	24	22	19	15
		kW	1.20	1.20	1.20	1.21	1.33	1.33	1.33	1.34	1.47	1.47	1.47	1.48	1.63	1.63	1.62	1.63	1.80	1.80	1.80	1.81	2.00	2.00	2.00	2.01
		Amps	4.3	4.3	4.2	4.3	4.8	4.8	4.8	4.9	5.5	5.5	5.5	5.5	6.2	6.2	6.2	6.2	7.0	7.0	7.0	7.0	7.9	7.9	7.9	8.0
	675	MBh	19.3	19.6	20.1	21.0	19.1	19.4	20.0	20.8	18.7	18.9	19.5	20.3	17.8	18.1	18.7	19.5	16.8	17.1	17.6	18.5	15.9	16.2	16.7	17.6
		S/T	0.79	0.72	0.59	0.5	1.00	0.72	0.60	0.5	1.00	0.75	0.62	0.5	1.00	0.77	0.64	0.5	1.00	1.00	0.66	0.5	1.00	1.00	0.71	0.6
		ΔT	23	21	17	13	22	20	17	13	23	21	17	13	22	20	17	13	22	20	16	13	23	21	18	14
		kW	1.21	1.21	1.20	1.2	1.34	1.33	1.33	1.3	1.48	1.48	1.48	1.5	1.63	1.63	1.63	1.6	1.81	1.80	1.80	1.8	2.01	2.01	2.01	2.0
		Amps	4.3	4.3	4.3	4.3	4.9	4.9	4.9	4.9	5.5	5.5	5.5	5.6	6.2	6.2	6.2	6.3	7.0	7.0	7.0	7.1	8.0	7.9	7.9	8.0

IDB: Entering Indoor Dry Bulb Temperature

Shaded area reflects ACCA (TVA) conditions

kW = Total system power

High and low pressures are measured at the liquid and suction service valves.

Amps = outdoor unit amps (comp.+fan)

AIR CONDITIONING
369-553

DAIKIN RESIDENTIAL AIR CONDITIONERS

DAIKIN

DAIKIN

DC4SE

ENERGY-EFFICIENT
R32 SPLIT SYSTEM AIR CONDITIONER
UP TO 15.2 SEER2
1½ TO 5 TONS



R32

Standard Features

- High efficiency scroll compressor
- High-density foam compressor sound blanket
- Advanced Copeland® CoreSense™ Technology
- Fully charged for 15' of tubing length
- Copper tube/ enhanced aluminum fin coil 5mm diameter
- Factory-installed filter drier
- Sweat connection service valves with easy access to gauge ports
- Enclosed contactor
- High-pressure switch
- Ground lug connection
- Capacitors with extended life
- AHRI Certified
- ETL Listed

Cabinet Features

- Removable grille-style top design compliant with UL 60335-2-40
- Venturi for increased velocity of airflow
- Custom Nickel Gray powder-paint finish
- 500-hour salt-spray tested
- Wire fan discharge grille
- Steel louver coil guard
- Rust-resistant coated screws
- Top and side maintenance access
- Single-panel access to controls with space provided for field-installed accessories
- When properly anchored, meets the 2023 Florida Building Code unit integrity requirements for hurricane-type winds (Anchor bracket kits available.)

6 YEAR UNIT REPLACEMENT LIMITED WARRANTY

* 12 YEAR PARTS LIMITED WARRANTY

C ETL LISTED US Intertek

AHRI CERTIFIED

ISO 9001

* Complete warranty details available from your local dealer or at www.daikincomfort.com. To receive the 6-Year Unit Replacement Limited Warranty and 12-Year Parts Limited Warranty, online registration must be completed within 60 days of installation. Additional requirements for annual maintenance are required for the Unit Replacement Limited Warranty. Online registration and some of the additional requirements are not required in California or Québec. The duration of warranty coverage in Texas and Florida differs in some cases.

DAIKIN RESIDENTIAL AIR CONDITIONERS

DAIKIN

DC4SEA SPECIFICATION

	DC4SE A1810A*	DC4SE A2410A*	DC4SE A3010A*	DC4SE A3610A*	DC4SE A4210A*	DC4SE A4810A*	DC4SE A6010A*
COOLING CAPACITY							
Nominal Cooling (BTU/h)	18,000	24,000	30,000	36,000	42,000	48,000	60,000
Decibels (dBA)	71.0	68.0	68.0	66.0	71.0	72.0	75.0
COMPRESSOR							
RLA	8.3	10.2	11.5	13.4	14.4	19.4	23.9
LRA	44.3	59.3	66.3	83.3	112.2	127.7	148.0
Stage	Single	Single	Single	Single	Single	Single	Single
Type	Scroll	Scroll	Scroll	Scroll	Scroll	Scroll	Scroll
CONDENSER FAN MOTOR							
Motor Type	PSC	PSC	PSC	PSC	PSC	PSC	ECM
Horsepower (RPM)	1/8	1/8	1/6	1/6	1/6	1/6	1/3
FLA	0.70	0.70	0.95	0.95	0.95	0.95	2.6
REFRIGERATION SYSTEM							
Refrigerant Line Size[1]							
Liquid Line Size ("O.D.)	⅜"	⅜"	⅜"	⅜"	⅜"	⅜"	⅜"
Suction Line Size ("O.D.)	¾"	¾"	¾"	⅞"	1⅛"	1⅛"	1⅛"
Refrigerant Connection Size							
Liquid Valve Size ("O.D.)	⅜"	⅜"	⅜"	⅜"	⅜"	⅜"	⅜"
Suction Valve Size ("O.D.)[2]	¾"	¾"	⅞"	⅞"	⅞"	⅞"	⅞"
Valve Connection Type	Sweat	Sweat	Sweat	Sweat	Sweat	Sweat	Sweat
Refrigerant Charge [3]	54	58	64	69	83	91	94
ELECTRICAL DATA							
Voltage-Phase	208/230-1	208/230-1	208/230-1	208/230-1	208/230-1	208/230-1	208/230-1
Minimum Circuit Ampacity [4]	11.1	13.5	15.4	17.8	19.0	25.2	32.4
Max. Overcurrent Protection [5]	15.0	15.0	25.0	30.0	30.0	40.0	50.0
Min / Max Volts	197/253	197/253	197/253	197/253	197/253	197/253	197/253
Electrical Conduit Size	½" or ¾"	½" or ¾"	½" or ¾"	½" or ¾"	½" or ¾"	½" or ¾"	½" or ¾"
Equipment Weight (lbs)	129	136	152	158	210	211	224
Ship Weight (lbs)	144	151	167	173	225	226	239

[1] Line sizes denoted for 25' line sets, tested and rated in accordance with AHRI Standard 210/240. For other line set lengths or sizes, refer to the Installation Instructions and/or the Long Line Set Applications guide.

[2] Any suction line adapter will need to be supplied by the field.

[3] Unit is factory charged with refrigerant for 15' of ⅜" liquid line. System charge must be adjusted per the Final Charge Adjustment procedure found in the Installation Instructions.

[4] Wire size should be determined in accordance with National Electrical Codes; extensive wire runs will require larger wire sizes

[5] Must use time-delay fuses or HACR-type circuit breakers of the same size as noted.

NOTES

- Always check the S&R plate for electrical data on the unit being installed.

DAIKIN RESIDENTIAL AIR CONDITIONERS

DAIKIN

DC3SE

ENERGY-EFFICIENT
R-32 SPLIT SYSTEM AIR CONDITIONER
UP TO 15 SEER2
1½ TO 5 TONS



Contents

Nomenclature 2
Product Specifications 3
Expanded Cooling Data 5
Performance Data 18
AHRI Ratings (see note) 20
Wiring Diagram 21
Dimensions 23
Accessories 23

R32

Standard Features

- High efficiency scroll compressor
- High-density foam compressor sound blanket
- Advanced Copeland® CoreSense™ Technology
- Fully charged for 15' of tubing length
- Copper tube/ enhanced aluminum fin coil 5mm diameter
- Factory-installed filter drier
- Sweat connection service valves with easy access to gauge ports
- Enclosed contactor
- High-pressure switch
- Ground lug connection
- Capacitors with extended life
- AHRI Certified
- ETL Listed

Cabinet Features

- Removable grille-style top design compliant with UL 60335-2-40
- Venturi for increased velocity of airflow
- Custom Nickel Gray powder-paint finish
- 500-hour salt-spray tested
- Wire fan discharge grille
- Steel louver coil guard
- Top and side maintenance access
- Single-panel access to controls with space provided for field-installed accessories
- When properly anchored, meets the 2023 Florida Building Code unit integrity requirements for hurricane-type winds (Anchor bracket kits available.)

6 YEAR UNIT REPLACEMENT LIMITED WARRANTY

12 YEAR PARTS LIMITED WARRANTY

Intertek

* Complete warranty details available from your local dealer or at www.daikincomfort.com. To receive the 6-Year Unit Replacement Limited Warranty and 12-Year Parts Limited Warranty, online registration must be completed within 60 days of installation. Additional requirements for annual maintenance are required for the Unit Replacement Limited Warranty. Online registration and some of the additional requirements are not required in California or Québec. The duration of warranty coverage in Texas and Florida differs in some cases.

DAIKIN RESIDENTIAL AIR CONDITIONERS

DAIKIN

DC3SE SPECIFICATION

PRODUCT SPECIFICATIONS

	DC3SEN 1810A*	DC3SEN 2410A*	DC3SEN 3010A*	DC3SEN 3610A*	DC3SEN 4210A*	DC3SEN 4810A*	DC3SEN 6010A*
COOLING CAPACITY							
Nominal Cooling (BTU/h)	18,000	24,000	30,000	36,000	42,000	48,000	60,000
Decibels (dBA)	72.0	68.0	68.0	69.0	73.0	71.0	74.0
COMPRESSOR							
RLA	8.3	10.2	11.5	13.4	14.4	19.4	23.9
LRA	44.3	59.3	66.3	83.3	112.2	127.7	148.0
Stage	Single	Single	Single	Single	Single	Single	Single
Type	Scroll	Scroll	Scroll	Scroll	Scroll	Scroll	Scroll
CONDENSER FAN MOTOR							
Motor Type	PSC	PSC	PSC	PSC	PSC	PSC	PSC
Horsepower (RPM)	1/8	1/8	1/8	1/8	1/4	1/4	1/4
FLA	0.70	0.70	0.70	0.70	1.4	1.4	1.3
REFRIGERATION SYSTEM							
Refrigerant Line Size[1]							
Liquid Line Size ("O.D.)	⅜"	⅜"	⅜"	⅜"	⅜"	⅜"	⅜"
Suction Line Size ("O.D.)	¾"	¾"	¾"	⅞"	1⅛"	1⅛"	1⅛"
Refrigerant Connection Size							
Liquid Valve Size ("O.D.)	⅜"	⅜"	⅜"	⅜"	⅜"	⅜"	⅜"
Suction Valve Size ("O.D.)[2]	¾"	¾"	¾"	⅞"	⅞"	⅞"	⅞"
Valve Connection Type	Sweat	Sweat	Sweat	Sweat	Sweat	Sweat	Sweat
Refrigerant Charge [3]	52	53.4	54.6	60	74	84	91
ELECTRICAL DATA							
Voltage-Phase	208/230-1	208/230-1	208-230-1	208/230-1	208/230-1	208/230-1	208/230-1
Minimum Circuit Ampacity [4]	11.1	13.5	15.1	17.5	19.4	25.6	31.1
Max. Overcurrent Protection [5]	15.0	15.0	25.0	30.0	30.0	40.0	50.0
Min / Max Volts	197/253	197/253	197/253	197/253	197/253	197/253	197/253
Electrical Conduit Size	½" or ¾"	½" or ¾"	½" or ¾"	½" or ¾"	½" or ¾"	½" or ¾"	½" or ¾"
Equipment Weight (lbs)	125	126	137	136	180	188	229
Ship Weight (lbs)	140	141	152	151	195	203	244

[1] Line sizes denoted for 25' line sets, tested and rated in accordance with AHRI Standard 210/240. For other line set lengths or sizes, refer to the Installation Instructions and/or the Long Line Set Applications guide.

[2] Any suction line adapter will need to be supplied by the field.

[3] Unit is factory charged with refrigerant for 15' of ⅜" liquid line. System charge must be adjusted per the Final Charge Adjustment procedure found in the Installation Instructions.

[4] Wire size should be determined in accordance with National Electrical Codes; extensive wire runs will require larger wire sizes

[5] Must use time-delay fuses or HACR-type circuit breakers of the same size as noted.

NOTES

- Always check the S&R plate for electrical data on the unit being installed.

DAIKIN RESIDENTIAL AIR CONDITIONERS

DAIKIN

DX16SA

Cooling Capacity: 17,000 - 57,000 BTU/h

High-Efficiency
Split System Air Conditioner
Up to 16 SEER / 1½ to 5 Tons



■ *Standard Features*

- High-efficiency Copeland® scroll compressor
- High-density foam compressor sound blanket
- Advanced Copeland® CoreSense™ Technology
- Single-speed PSC condenser fan motor
- Factory-installed filter drier
- Copper tube / enhanced aluminum fin coil
- Sweat connection service valves with easy access to gauge ports
- AHRI Certified; ETL Listed

■ *Cabinet Features*

- Heavy-gauge galvanized steel cabinet with grille-style sound control top
- Custom Nickel Gray powder-paint finish
- 500-hour salt-spray tested
- Wire fan discharge grille
- Steel louver coil guard
- Rust-resistant coated screws
- Top and side maintenance access
- Single-panel access to controls with space provided for field-installed accessories
- When properly anchored, meets the 2010 Florida Building Code unit integrity requirements for hurricane-type winds (Anchor bracket kits available.)

Proper sizing and installation of equipment is critical to achieve optimal performance. Split system air conditioners and heat pumps must be matched with appropriate coil components to meet ENERGY STAR® criteria. Ask your contractor for details or visit www.energystar.gov.

10 YEAR UNIT REPLACEMENT LIMITED WARRANTY

12 YEAR PARTS LIMITED WARRANTY

Intertek

* Complete warranty details available from your local dealer or at www.daikincomfort.com. To receive the 6-Year Unit Replacement Limited Warranty and 12-Year Parts Limited Warranty, online registration must be completed within 60 days of installation. Additional requirements for annual maintenance are required for the Unit Replacement Limited Warranty. Online registration and some of the additional requirements are not required in California or Quebec.

DAIKIN RESIDENTIAL AIR CONDITIONERS

DAIKIN

DX16SA SPECIFICATION

	DX16SA 0181A*	DX16SA 0241A*	DX16SA 0301A*	DX16SA 0311A*	DX16SA 0361A*	DX16SA 0371A*	DX16SA 0421A*	DX16SA 0481A*	DX16SA 0601A*	DX16SA 0611A*
CAPACITIES										
Nominal Cooling (BTU/h)	18,000	23,600	29,000	30,000	34,800	36,000	42,000	45,500	54,000	57,000
Decibels	71.5	71.5	71.5	71.5	71.5	73	73	73	73	73
COMPRESSOR										
RLA	9.0	13.5	12.8	12.8	14.1	15.4	17.9	17.9	21.4	25
LRA	46	58.3	64	64	77	83.9	112	112	135	134
CONDENSER FAN MOTOR										
Horsepower	1/6	1/6	1/6	1/6	1/6	1/6	1/6	1/4	1/3	1/4
FLA	0.95	0.95	0.95	0.95	0.95	0.95	0.95	1.30	2.80	1.30
REFRIGERATION SYSTEM										
Refrigerant Line Size										
Liquid Line Size ("O.D.)	⅜"	⅜"	⅜"	⅜"	⅜"	⅜"	⅜"	⅜"	⅜"	⅜"
Suction Line Size ("O.D.)	¾"	¾"	⅞"	⅞"	⅞"	⅞"	⅞"	⅞"	⅞"	⅞"
Refrigerant Connection Size										
Liquid Valve Size ("O.D.)	⅜"	⅜"	⅜"	⅜"	⅜"	⅜"	⅜"	⅜"	⅜"	⅜"
Suction Valve Size ("O.D.)	¾"	¾"	⅞"	⅞"	⅞"	⅞"	⅞"	⅞"	⅞"	⅞"
Valve Type	Sweat	Sweat	Sweat	Sweat	Sweat	Sweat	Sweat	Sweat	Sweat	Sweat
Refrigerant Charge (oz.)	78	70	78	94	94	93	110	121	237	125
ELECTRICAL DATA										
Voltage / Phase (60 Hz)	208/230-1	208/230-1	208/230-1	208/230-1	208/230-1	208/230-1	208/230-1	208/230-1	208/230-1	208/230-1
Minimum Circuit Ampacity [2]	12.2	17.8	17.0	17.0	18.6	20.2	23.3	23.7	28.3	32.6
Max. Overcurrent Protection [3]	20	30	25	25	30	35	40	40	50	50
Min / Max Volts	197/253	197/253	197/253	197/253	197/253	197/253	197/253	197/253	197/253	197/253
Electrical Conduit Size	½" or ¾"	½" or ¾"	½" or ¾"	½" or ¾"	½" or ¾"	½" or ¾"	½" or ¾"	½" or ¾"	½" or ¾"	½" or ¾"
EQUIPMENT WEIGHT (LBS)	145	142	149	161	162	182	206	219	279	291
SHIP WEIGHT (LBS)	163	160	167	179	180	204	228	241	301	314
ENERGY STAR® CERTIFIED ^										NO

^ ENERGY STAR NOTES

- Proper sizing and installation of equipment is critical to achieve optimal performance. Split system air conditioners and heat pumps must be matched with appropriate coil components to meet ENERGY STAR criteria. Ask your contractor for details or visit www.energystar.gov.
- The www.energystar.gov website provides up-to-date system combinations certified to meet ENERGY STAR requirements. See Page 24 for all ENERGY STAR certified combinations as of this document's revision date.

[1] Tested and rated in accordance with AHRI Standard 210/240

[2] Wire size should be determined in accordance with National Electrical Codes; extensive wire runs will require larger wire sizes

[3] Must use time-delay fuses or HACR-type circuit breakers of the same size as noted.

NOTES

- Always check the S&R plate for electrical data on the unit being installed.
- Installer will need to supply ⅞" to 1⅛" adapters for suction line connections.
- Unit is charged with refrigerant for 15' of ⅜" liquid line. System charge must be adjusted per Installation Instructions Final Charge Procedure.
- Installation of these units requires the specified TXV Kit to be installed on the indoor coil.
  THE SPECIFIED TXV IS DETERMINED BY THE OUTDOOR UNIT NOT THE INDOOR COIL.

DAIKIN RESIDENTIAL AIR CONDITIONERS

DAIKIN

DX16TC

High-Efficiency, ComfortNet™-Compatible, Split System Air Conditioner Up to 17 SEER



Standard Features

- Two-Stage Copeland® Ultra-Tech scroll compressor
- High-density foam compressor sound blanket
- ComfortNet™ Communications System compatible
- Advanced Copeland® CoreSense™ technology
- High-efficiency PSC or ECM condenser fan motor
- In communicating mode, two low-voltage wires to outdoor unit required
- Diagnostic indicator lights and fault code storage
- Color-coded terminal strip
- Factory-installed filter drier
- Coil and ambient temperature sensors
- Sweat connection service valves with easy access to gauge ports
- AHRI Certified; ETL Listed

Cabinet Features

- Heavy-gauge galvanized-steel cabinet with grille-style sound control top design
- Custom Nickel Gray powder-paint finish
- 500-hour salt-spray tested
- Wire fan discharge grille
- Steel louver coil guard
- Top and side maintenance access
- Single-panel access to controls with space provided for field-installed accessories
- When properly anchored, meets the 2010 Florida Building Code unit integrity requirements for hurricane-type winds (Anchor bracket kits available.)

12 YEAR UNIT REPLACEMENT LIMITED WARRANTY*

12 YEAR PARTS LIMITED WARRANTY*

ComfortNet

C ETL US LISTED Intertek

* Complete warranty details available from your local dealer or at www.daikincomfort.com. To receive the 12-Year Unit Replacement Limited Warranty and 12-Year Parts Limited Warranty, online registration must be completed within 60 days of installation. Additional requirements for annual maintenance are required for the Unit Replacement Limited Warranty. Online registration and some of the additional requirements are not required in California or Quebec.

DAIKIN RESIDENTIAL AIR CONDITIONERS

DAIKIN

DX16TC SPECIFICATION

	DX16TC 0241C*	DX16TC 0361C*	DX16TC 0481C*	DX16TC 0601C*
COOLING CAPACITY				
Nominal Cooling (BTU/h)	24,000	36,000	48,000	60,000
Decibels	71/70	71/70	72/71	74/70
COMPRESSOR				
RLA	10.0	14.8	20.4	22.9
LRA	62.9	84.2	122.1	147.2
CONDENSER FAN MOTOR				
Horsepower (RPM)	1/6	1/6	1/6	1/3
FLA	1.1	1.2	1.2	2.8
REFRIGERATION SYSTEM				
Refrigerant Line Size				
Liquid Line Size ("O.D.)	⅜"	⅜"	⅜"	⅜"
Suction Line Size ("O.D.)	¾"	⅞"	1⅛"	1⅛"
Refrigerant Connection Size				
Liquid Valve Size ("O.D.)	⅜"	⅜"	⅜"	⅜"
Suction Valve Size ("O.D.)	¾"	¾"	⅞"	⅞"
Valve Connection Type	Sweat	Sweat	Sweat	Sweat
Refrigerant Charge (oz.)	92	114	177	191
ELECTRICAL DATA				
Voltage-Phase-Hz	208/230-1	208/230-1-60	208/230-1-60	208/230-1-60
Minimum Circuit Ampacity [2]	13.6	19.7	26.7	31.4
Max. Overcurrent Protection [3]	20	30	45	50
Min / Max Volts	197/253	197/253	197/253	197/253
Power Supply	½" or ¾"	½" or ¾"	½" or ¾"	½" or ¾"
EQUIPMENT WEIGHT (LBS)	180	201	263	304
SHIP WEIGHT (LBS)	197	223	285	326
ENERGY STAR® CERTIFIED				

^ ENERGY STAR NOTES

- Proper sizing and installation of equipment is critical to achieving optimal performance. Split system air conditioners and heat pumps must be matched with appropriate coil components to meet ENERGY STAR criteria. Ask your contractor for details or visit www.energystar.gov.
- The www.energystar.gov website provides up-to-date system combinations certified to meet ENERGY STAR requirements. See Pages 20 for all ENERGY STAR certified combinations as of this document's revision date.

[1] Tested and rated in accordance with AHRI Standard 210/240

[2] Wire size should be determined in accordance with National Electrical Codes; extensive wire runs will require larger wire sizes

[3] Must use time-delay fuses or HACR-type circuit breakers of the same size as noted.

NOTES

- Always check the S&R plate for electrical data on the unit being installed.
- Installer will need to supply ⅞" to 1⅛" adapters for suction line connections.
- Unit is charged with refrigerant for 15' of ⅜" liquid line. System charge must be adjusted per Installation Instructions Final Charge Procedure.
- Installation of these units requires the specified TXV Kit to be installed on the indoor coil. THE SPECIFIED TXV IS DETERMINED BY THE OUTDOOR UNIT NOT THE INDOOR COIL.

DAIKIN RESIDENTIAL AIR CONDITIONERS

DAIKIN

DX20VC

UP TO 23 SEER
2 TO 5 TONS

HIGH-EFFICIENCY, COMFORTNET™-COMPATIBLE, VARIABLE-SPEED, INVERTER DRIVE SPLIT SYSTEM AIR CONDITIONER



Standard Features

- Daikin variable-speed swing and scroll compressors
- High-density foam compressor sound blanket
- *ComfortNet™* Communications System compatible
- Daikin control algorithmic logic
- In communicating mode, only two low-voltage wires to outdoor unit required
- Diagnostic indicator lights, seven-segment LED display, and fault code storage
- Daikin Inside intelligence for diagnostics
- Field-selectable boost mode increases compressor speed during unusually high loads
- Quiet ECM outdoor fan motor
- Field-installed bi-flow filter drier
- Coil and ambient temperature sensors
- Suction pressure transducer
- Sweat connection service valves with easy access to gauge ports
- AHRI Certified; ETL Listed

Proper sizing and installation of equipment is critical to achieve optimal performance. Split system air conditioners and heat pumps must be matched with appropriate coil components to meet ENERGY STAR® criteria. Ask your contractor for details or visit www.energystar.gov.

Cabinet Features

- Heavy-gauge galvanized-steel cabinet with grille-style sound control top design
- Custom Nickel Gray powder-paint finish
- 500-hour salt-spray tested
- Wire fan discharge grille
- Steel louver coil guard
- Top and side maintenance access
- Single-panel access to controls with space provided for field-installed accessories
- When properly anchored, meets the 2010 Florida Building Code unit integrity requirements for hurricane-type winds (Anchor bracket kits available.)

* Complete warranty details available from your local dealer or at www.daikincomfort.com. To receive the 12-Year Unit Replacement Limited Warranty and 12-Year Parts Limited Warranty, online registration must be completed within 60 days of installation. Additional requirements for annual maintenance are required for the Unit Replacement Limited

DAIKIN

DX20VC SPECIFICATION

	DX20VC 0241B*	DX20VC 0361B*	DX20VC 0481B*	DX20VC 0601B*
Cooling Capacity				
Max. Cooling (BTU/h)	23,600	34,600	45,500	53,000
Compressor				
Type	Swing	Swing	Swing	Scroll
RLA	12.70	18.10	27.60	28.60
Condenser Fan Motor				
Horsepower (HP)	½ HP	½ HP	½ HP	½ HP
FLA	2.5	2.5	2.5	2.5
Refrigeration System				
Refrigerant Line Size				
Liquid Line Size ("O.D.)	⅜"	⅜"	⅜"	⅜"
Suction Line Size ("O.D.)	¾"	⅞"	1⅛"	1⅛"
Refrigerant Connection Size				
Liquid Valve Size ("O.D.)	⅜"	⅜"	⅜"	⅜"
Suction Valve Size ("O.D.)	¾"	⅞"	⅞"	⅞"
Valve Connection Type	Front-Seated	Front-Seated	Ball Valve	Ball Valve
Refrigerant Charge (oz.)	152	154	246	246
Superheat at Service Valve	7-9°F	7-9°F	7-9°F	7-9°F
Subcooling at Service Valve	7-9°F	7-9°F	7-9°F	7-9°F
Electrical Data				
Voltage-Phase (60 Hz)	208/230-1	208/230-1	208/230-1	208/230-1
Minimum Circuit Ampacity [1]	15.2	20.6	30.1	31.1
Max. Overcurrent Protection [2]	20	25	35	35
Min / Max Volts	197/253	197/253	197/253	197/253
Electrical Conduit Size	½" or ¾"	½" or ¾"	½" or ¾"	½" or ¾"
Equipment Weight (lbs)	210	221	321	321
Ship Weight (lbs)	241	253	353	353
ENERGY STAR® Certified ^	Most Efficient 2019	Most Efficient 2019	Most Efficient 2019	Most Efficient 2019

^ Energy Star Notes

- Products that are recognized as the Most Efficient of ENERGY STAR® in 2019 prevent greenhouse gas emissions by meeting rigorous energy efficiency performance levels set by the U.S. Environmental Protection Agency.
- Proper sizing and installation of equipment is critical to achieving optimal performance. Split system air conditioners and heat pumps must be matched with appropriate coil components to meet ENERGY STAR criteria. Ask your contractor for details or visit www.energystar.gov.
- The www.energystar.gov website provides up-to-date system combinations certified to meet ENERGY STAR requirements. See Page 23 for all ENERGY STAR certified combinations as of this document's revision date.

** Inverter/Controller limited to less than 1 Amp

[1] Wire size should be determined in accordance with National Electrical Codes; extensive wire runs will require larger wire sizes

[2] Must use time-delay fuses or HACR-type circuit breakers of the same size as noted.

Notes

- Always check the S&R plate for electrical data on the unit being installed.
- Installer will need to supply ⅞" to 1⅛" adapters for suction line connections.
- Unit is charged with refrigerant for 15' of ⅜" liquid line. System charge must be adjusted per Installation Instructions Final Charge Procedure.

DAIKIN RESIDENTIAL HEAT PUMPS

DAIKIN

DAIKIN

DH4SE

ENERGY-EFFICIENT STANDARD FAMILY
R32 SPLIT-SYSTEM HEAT PUMP
UP TO 15.2 SEER2 AND 7.8 HSPF2
1 ½ TO 5 TONS



R32

Standard Features

- High-efficiency Copeland® scroll compressor
- Advanced Copeland® CoreSense™ technology
- Enhanced aluminum fin coil with 5mm diameter copper tubes in 1.5- to 3.5-ton
- Enhanced aluminum fin coil with 7mm diameter copper tubes in 4.0- to 5.0-ton
- Time-delay technology to ensure quiet reliable defrost
- Factory-installed bi-flow liquid line filter drier
- Factory-installed suction line accumulator
- Factory-installed compressor crank case heater
- Factory-installed high capacity muffler
- High- and low-pressure switches
- Service valves with sweat connections and easy access to gauge ports
- Fully charged for 15' of tubing length
- High density foam compressor sound blanket on 1.5-2.0T
- Capacitors with extended life
- AHRI Certified; ETL Listed

Cabinet Features

- Removable grille-style top design compliant with UL 60335-2-40
- Venturi for increased velocity of airflow
- Custom Nickel Gray powder- paint finish with 500- hour salt- spray approval
- Steel louver coil guard with rust-resistant screws
- Wire fan discharge grille
- Steel louver coil guard
- Rust-resistant screws
- Top and side maintenance access
- Single-panel access to controls with space provided for field-installed accessories
- When properly anchored, meets the 2023 Florida Building Code unit integrity requirements for hurricane-type winds (Anchor bracket kits available.)

6 YEAR UNIT LIMITED WARRANTY

12 YEAR PARTS LIMITED WARRANTY

Intertek

* Complete warranty details available from your local dealer or at www.daikincomfort.com. To receive the 6-Year Unit Replacement Limited Warranty and 12-Year Parts Limited Warranty, online registration must be completed within 60 days of installation. Additional requirements for annual maintenance are required for the Unit Replacement Limited Warranty. Online registration and some of the additional requirements are not required in California or Quebec. The duration of warranty coverage in Texas and Florida differs in some cases.

DAIKIN RESIDENTIAL HEAT PUMPS

DAIKIN

DH4SEA SPECIFICATION

PRODUCT SPECIFICATIONS

	DH4SEA 1810*	DH4SEA 2410*	DH4SEA 3010*	DH4SEA 3610*	DH4SEA 4210*	DH4SEA 4810*	DH4SEA 6010*
NOMINAL CAPACITIES							
Cooling (BTU/h)	18,000	24,000	30,000	36,000	42,000	48,000	60,000
Heating (BTU/h)	18,000	24,000	30,000	36,000	42,000	48,000	60,000
Decibels	68	68	70	74	71	73	74
COMPRESSOR							
RLA	8.3	10.2	12.8	16.4	14.4	19.4	23.9
LRA	44.3	59.3	76.0	88.0	112.2	127.7	148.0
Stage	Single	Single	Single	Single	Single	Single	Single
Type	Scroll	Scroll	Scroll	Scroll	Scroll	Scroll	Scroll
CONDENSER FAN MOTOR							
Motor Type	PSC	PSC	PSC	PSC	PSC	PSC	PSC
Horsepower	1/6	1/6	1/6	1/6	1/4	1/4	1/4
FLA	0.95	0.95	0.95	0.97	1.30	1.30	1.30
REFRIGERATION SYSTEM							
Refrigerant Line Size [1]							
Liquid Line Size ("O.D.)	⅜"	⅜"	⅜"	⅜"	⅜"	⅜"	⅜"
Suction Line Size ("O.D.)	¾"	¾"	¾"	⅞"	1⅛"	1⅛"	1⅛"
Refrigerant Connection Size							
Liquid Valve Size ("O.D.)	⅜"	⅜"	⅜"	⅜"	⅜"	⅜"	⅜"
Suction Valve Size ("O.D.)	¾"	¾"	¾"	⅞"	⅞"	⅞"	⅞"
Valve Connection Type	Sweat	Sweat	Sweat	Sweat	Sweat	Sweat	Sweat
Refrigerant Charge	71	70	78	83	139	174	194
ELETRICAL DATA							
Voltage (60 Hz)	208/230	208/230	208/230	208/230	208/230	208/230	208/230
Minimum Circuit Ampacity [2]	11.4	13.8	17.0	21.5	19.3	25.5	31.1
Max. Overcurrent Protection [3]	15	20	25	35	30	40	50
Min / Max Volts	197/253	197/253	197/253	197/253	197/253	197/253	197/253
Electrical Conduit Size	1/2" or 3/4"	1/2" or 3/4"	1/2" or 3/4"	1/2" or 3/4"	1/2" or 3/4"	1/2" or 3/4"	1/2" or 3/4"
UNIT WEIGHTS							
Equipment Weight	160	160	174	196	262	269	300
Shipping Weight	175	175	189	211	277	284	320

[1] Tested and rated in accordance with ARI Standard 210/240

[2] Wire size should be determined in accordance with National Electrical Codes; extensive wire runs will require larger wire sizes

[3] Must use time-delay fuses or HACR-type circuit breakers of the same size as noted.

NOTES

- Always check the S&R plate for electrical data on the unit being installed.
- Installer will need to supply ⅞" to 1⅛" adapters for suction line connections.
- Unit is charged with refrigerant for 15' of ⅜" liquid line. System charge must be adjusted per Installation Instructions Final Charge Procedure.
- Installation of these units requires the specified TXV Kit to be installed on the indoor coil. THE SPECIFIED TXV IS DETERMINED BY THE OUTDOOR UNIT NOT THE INDOOR COIL.

DAIKIN RESIDENTIAL HEAT PUMPS

DAIKIN

DAIKIN DH5SE

R-32 Split-System Heat Pump
Up to 16 SEER2 & 8.2 HSPF2
1 ½ to 5 Tons



R32

Standard Features

- High-efficiency Copeland® scroll compressor
- Advanced Copeland® CoreSense™ technology
- Enhanced aluminum fin with coil-5mm diameter copper tubes in 1.5T-3.5 ton
- Enhanced aluminum fin coil with 7mm diameter copper tubes 4.0-5.0 ton
- Single-speed PSC condenser fan motor
- High density foam compressor sound blanket
- Time-delay technology to ensure quiet reliable defrost
- Factory-installed bi-flow liquid line filter drier
- Factory-installed suction line accumulator
- Factory-installed compressor crank case heater
- Factory-installed high capacity muffler
- High- and low-pressure switches
- High density foam compressor sound blanket
- Service valves with sweat connections and easy access to gauge ports
- Copper tube/enhanced aluminum fin coil
- Fully charged for 15' of tubing length
- Fully enclosed contactor
- Capacitor with extended life
- AHRI Certified; ETL Listed

Cabinet Features

- Removable grille-style top design compliant with UL 60335-2-40
- Custom Nickel Gray powder-paint finish
- 500-hour salt-spray tested
- Single-speed PSC condenser fan motor
- Wire fan discharge grille
- Steel louver coil guard
- Rust-resistant screws
- Top and side maintenance access
- Single-panel access to controls with space provided for field-installed accessories
- When properly anchored, meets the 2023 Florida Building Code unit integrity requirements for hurricane-type winds (Anchor bracket kits available.)

ENERGY STAR PARTNER

Proper sizing and installation of equipment is critical to achieve optimal performance. Split system air conditioners and heat pumps must be matched with appropriate coil components to meet **ENERGY STAR®** criteria. Ask your contractor for details or visit www.energystar.gov.

6 YEAR UNIT REPLACEMENT LIMITED WARRANTY

12 YEAR PARTS LIMITED WARRANTY

Intertek

* Complete warranty details available from your local dealer or at www.daikincomfort.com. To receive the 6-Year Unit Replacement Limited Warranty and 12-Year Parts Limited Warranty, online registration must be completed within 60 days of installation. Additional requirements for annual maintenance are required for the Unit Replacement Limited Warranty. Online registration and some of the additional requirements are not required in California or Québec. The duration of warranty coverage in Texas and Florida differs in some cases.

DAIKIN RESIDENTIAL HEAT PUMPS

DAIKIN

PRODUCT SPECIFICATIONS

	DH5SEA 1810A*	DH5SEA 2410A*	DH5SEA 3010A*	DH5SEA 3610A*	DH5SEA 4210A*	DH5SEA 4810A*	DH5SEA 6010A*
NOMINAL CAPACITIES							
Cooling (BTU/h)	18,000	24,000	30,000	36,000	42,000	48,000	60,000
Heating (BTU/h)	18,000	24,000	30,000	36,000	42,000	48,000	60,000
SEER2	15.2	15.2	15.2	15.2	15.2	15.2	15.2
Decibels	70.0	73.0	73.0	71.1	72.0	73.6	74.8
COMPRESSOR							
RLA	9.3	11.4	12.9	18.4	16.1	21.6	30.2
LRA	44.3	59.3	76.0	88.0	112.2	127.7	178.0
Stage	Single	Single	Single	Single	Single	Single	Two
Type	Scroll	Scroll	Scroll	Scroll	Scroll	Scroll	Scroll
CONDENSER FAN MOTOR							
Horsepower	1/6	1/6	1/6	1/6	1/4	1/4	1/5
FLA	0.95	0.95	0.97	1.0	1.3	1.3	1.0
REFRIGERATION SYSTEM							
Refrigerant Line Size[1]							
Liquid Line Size ("O.D.)	¼"	¼"	¼"	⅜"	⅜"	⅜"	⅜"
Suction Line Size ("O.D.)	⅝"	⅝"	⅝"	¾"	⅞"	⅞"	⅞"
Refrigerant Connection Size							
Liquid Valve Size ("O.D.)	⅜"	⅜"	⅜"	⅜"	⅜"	⅜"	⅜"
Suction Valve Size ("O.D.)	¾"	¾"	¾"	¾"	⅞"	⅞"	⅞"
Valve Connection Type	Sweat	Sweat	Sweat	Sweat	Sweat	Sweat	Sweat
Refrigerant Charge [4]	88	83	94	95	139	174	185
ELETRICAL DATA							
Voltage (60 Hz)	208/230	208/230	208/230	208/230	208/230	208/230	208/230
Minimum Circuit Ampacity [2]	12.6	15.2	17.1	24.0	21.4	28.3	38.8
Max. Overcurrent Protection [3]	20	25	25	40	35	45	60
Min / Max Volts	197/253	197/253	197/253	197/253	197/253	197/253	197/253
Electrical Conduit Size	½" or ¾"	½" or ¾"	½" or ¾"	½" or ¾"	½" or ¾"	½" or ¾"	½" or ¾"
UNIT WEIGHTS							
Equipment Weight	171	171	215	222	257	264	309
Shipping Weight	186	213	235	242	277	284	329
ENERGY STAR® CERTIFIED	ENERGY STAR	ENERGY STAR	ENERGY STAR	ENERGY STAR	ENERGY STAR	ENERGY STAR	ENERGY STAR

[1] Tested and rated in accordance with ARI Standard 210/240

[2] Wire size should be determined in accordance with National Electrical Codes; extensive wire runs will require larger wire sizes

[3] Must use time-delay fuses or HACR-type circuit breakers of the same size as noted.

NOTES

- Always check the S&R plate for electrical data on the unit being installed.
- Installer will need to supply ⅞" to 1⅛" adapters for suction line connections.
- Unit is charged with refrigerant for 15' of ⅜" liquid line. System charge must be adjusted per Installation Instructions Final Charge Procedure.
- Installation of these units requires the specified TXV Kit to be installed on the indoor coil. THE SPECIFIED TXV IS DETERMINED BY THE OUTDOOR UNIT NOT THE INDOOR COIL.

ENERGY STAR NOTES

Proper sizing and installation of equipment is critical to achieving optimal performance. Split system air conditioners and heat pumps must be matched with appropriate coil components to meet **ENERGY STAR** criteria. Ask your contractor for details or visit www.energystar.gov. The www.energystar.gov website provides up-to-date system combinations certified to meet **ENERGY STAR** requirements.

DAIKIN RESIDENTIAL HEAT PUMPS

DAIKIN

DAIKIN **DH6VS**

FIT

19.0 SEER2 & 8.8 HSPF2
1½ TO 5 TONS

DAIKIN *FIT*
HIGH-EFFICIENCY, COMMUNICATING, VARIABLE-SPEED, INVERTER DRIVE SIDE DISCHARGE R-32 SPLIT SYSTEM HEAT PUMP



R32

Standard Features

- Daikin variable-speed swing compressor
- Quiet digitally commutated fan motor
- High-density compressor sound blanket
- Compatible with Daikin *One+* smart thermostat and other Daikin communicating equipment
- Daikin control algorithmic logic
- Intelligent Defrost Mode
- In communicating mode, only two low-voltage wires to outdoor unit required
- Diagnostic indicator lights, seven-segment LED display, and fault code storage
- Daikin Inside intelligence for diagnostics
- Quiet-mode - provides enhanced acoustical comfort, up to 3 different sound levels (as low as 45dBA)
- Field-selectable boost mode increases compressor speed during unusually high loads
- Field-installed bi-flow filter drier
- Coil and ambient temperature sensors
- Suction pressure transducer
- Muffler on 1.5-3.0-ton models
- Sweat connection service valves with easy access to gauge ports
- Advanced water-shedding drain pan
- Hot start technology
- AHRI Certified; ETL Listed

Cabinet Features

- Heavy-gauge galvanized steel cabinet with grille-style sound control side design
- Custom Ivory white powder-paint finish
- 500-hour salt-spray tested
- High corrosion (ZAM®), unpainted steel bottom frame and legs
- Wire fan discharge grille
- Top and side maintenance access
- When properly anchored, meets the 2023 Florida Building Code unit integrity requirements for hurricane-type winds (Anchor bracket kits available.)

ENERGY STAR COLD CLIMATE

ENERGY STAR

12 YEAR UNIT REPLACEMENT LIMITED WARRANTY*

12 YEAR PARTS LIMITED WARRANTY*

Intertek

* Complete warranty details available from your local dealer or at www.daikincomfort.com. To receive the 12-Year Unit Replacement Limited Warranty and 12-Year Parts Limited Warranty, online registration must be completed within 60 days of installation. Additional requirements for annual maintenance are required for the Unit Replacement Limited Warranty. Online registration and some of the additional requirements are not required in California or Quebéc. The duration of warranty coverage in Texas and Florida differs in some cases.

DAIKIN RESIDENTIAL HEAT PUMPS

DAIKIN

PRODUCT SPECIFICATIONS

	DH6VSA 1810A*	DH6VSA 2410A*	DH6VSA 3010A*	DH6VSA 3610A*	DH6VSA 4210A*	DH6VSA 4810A*	DH6VSA 6010A*
CAPACITIES (AHRI RATED)							
Max. Cooling (BTU/h)-95F	17,100	23,200	28,400	34,200	41,000	45,500	53,500
Max. Heating (BTU/h)-47F	17,400	23,200	28,800	34,600	40,000	45,500	54,500
Max. Heating (BTU/h)-5F	13,000	14,200	17,000	20,000	27,400	28,000	33,000
AMBIENT OPERATION RANGE							
Cooling (°FDB(°CDB))	0 to 115 (-17.8 to 46.1)[2]						
Heating (°FDB(°CDB))	-10 to 70 (-23.3 to 21.1)						
COMPRESSOR							
Type	Swing	Swing	Swing	Swing	Swing	Swing	Swing
CONDENSER FAN MOTOR							
Horsepower	0.09	0.09	0.20	0.20	0.36	0.36	0.36
REFRIGERATION SYSTEM							
Refrigerant Line Size[1]							
Liquid Line Size ("O.D.)	⅜"	⅜"	⅜"	⅜"	⅜"	⅜"	⅜"
Suction Line Size ("O.D.)	¾"	¾"	⅞"	⅞"	1⅛"	1⅛"	1⅛"
Refrigerant Connection Size							
Liquid Valve Size ("O.D.)	⅜"	⅜"	⅜"	⅜"	⅜"	⅜"	⅜"
Suction Valve Size ("O.D.)	¾"	¾"	⅞"	⅞"	⅞"	⅞"	⅞"
Valve Connection Type	Front Sealing	Front Sealing	Front Sealing	Front Sealing	Front and Back Sealing	Front and Back Sealing	Front and Back Sealing
Refrigerant Charge (oz.)	74	74	76	83	100	100	118
Expansion Device	EEV	EEV	EEV	EEV	EEV	EEV	EEV
Superheat at Service Valve	Auto-control	Auto-control	Auto-control	Auto-control	Auto-control	Auto-control	Auto-control
Subcooling at Service Valve	10±1°F	12±1°F	14±1°F	15±1°F	8±1°F	9±1°F	9±1°F
ELECTRICAL DATA							
Voltage / Phase (60 Hz)	208-230/1	208-230/1	208-230/1	208-230/1	208-230/1	208-230/1	208-230/1
Fan/Compressor Inverter Drive Input	8.1	13.3	17.6	17.6	25.4	25.4	30
Minimum Circuit Ampacity[2]	12.8	16.8	22.4	22.4	31.8	31.8	37.5
Max. Overcurrent Protection[3]	15	20	25	25	35	35	40
Min / Max Volts	197/253	197/253	197/253	197/253	197/253	197/253	197/253
Electrical Conduit Size	½"	½"	½"	½"	½" or ¾"	½" or ¾"	½" or ¾"
EQUIPMENT WEIGHT (LBS)	122	122	132	137	168	168	179
SHIP WEIGHT (LBS)	137	137	147	151	185	185	198
ENERGY STAR® CERTIFIED	ENERGY STAR ENERGY STAR COLD CLIMATE	NO	NO	NO	NO	NO	NO

[1] Tested and rated in accordance with AHRI Standard 210/240

[2] Wire size should be determined in accordance with National Electrical Codes; extensive wire runs will require larger wire sizes

[3] Must use time-delay fuses or HACR-type circuit breakers of the same size as noted.

NOTES

- Always check the S&R plate for electrical data on the unit being installed.
- Installer will need to supply ⅞" to 1⅛" adapters for suction line connections.
- Unit is charged with refrigerant for 15' of ¾" liquid line. System charge must be adjusted per Installation Instructions Final Charge Procedure.

(See table below for allowable line set diameter)

ENERGY STAR NOTES

Proper sizing and installation of equipment is critical to achieving optimal performance. Split system air conditioners and heat pumps must be matched with appropriate coil components to meet **ENERGY STAR** criteria. Ask your contractor for details or visit www.energystar.gov. The www.energystar.gov website provides up-to-date system combinations certified to meet **ENERGY STAR** requirements.

UNIT TONS	ALLOWABLE LINE SET DIAMETER						
	LIQUID			SUCTION			
	¼	5/16	⅜	⅝	¾	⅞	1⅛
1.5	x	x	x	x*1	x		
2.0		x	x	x*1	x		
2.5		x	x		x*1	x	
3.0		x	x		x*1	x	
3.5			x			x	x
4.0			x			x	x
5.0			x			x	x

x Allowable combination

*1:For marked combinations, if normal ambient operation temperature is less than 14°F, limit line set length to 50 ft. max.

OUTDOOR UNIT	DH6VS*361*A*	
INDOOR UNIT	D*96TC0403B/0603B D*97MC0603B D*80TC0603B/0803B MBVK12BP D*96SC0603BU	TRIM MORE THAN 10% SETTINGS ARE INVALID. TRIMMED UP CFM MAKES MISS MATCHING ERROR.

OUTDOOR UNIT	DH6VS*601*A*	
INDOOR UNIT	D*96TC0804C D*97MC0804C D*80TC0804C	TRIM MORE THAN 5% SETTINGS ARE INVALID. TRIMMED UP CFM MAKES MISS MATCHING ERROR.

DAIKIN RESIDENTIAL HEAT PUMPS

DAIKIN

DAIKIN

DH7VS

FIT

UP TO 19.0 SEER2 & 8.8 HSPF2
2, 3, 3.5, AND 4 TONS

DAIKIN *FIT*
HIGH-EFFICIENCY, COMMUNICATING, VARIABLE-SPEED, INVERTER DRIVE SIDE DISCHARGE R-32 SPLIT SYSTEM HEAT PUMP



R32

Standard Features

- Daikin variable-speed swing compressor
- Strong heating capacity
- Quiet digitally commutated fan motor
- High-density compressor sound blanket
- Compatible with Daikin *One+* smart thermostat and other Daikin communicating equipment
- Daikin control algorithmic logic
- Intelligent Defrost Mode
- In communicating mode, only two low-voltage wires to outdoor unit required
- Diagnostic indicator lights, seven-segment LED display, and fault code storage
- Daikin Inside intelligence for diagnostics
- Quiet-mode - provides enhanced acoustical comfort, up to 3 different sound levels (as low as 45dBA)
- Field-selectable boost mode increases compressor speed during unusually high loads
- Field-installed bi-flow filter drier
- Coil and ambient temperature sensors
- Suction pressure transducer
- Muffler on 1.5-3.0-ton models
- Sweat connection service valves with easy access to gauge ports
- Advanced water-shedding drain pan
- Hot start technology
- AHRI Certified; ETL Listed

Cabinet Features

- Heavy-gauge galvanized steel cabinet with grille-style sound control side design
- Custom Ivory white powder-paint finish
- 500-hour salt-spray tested
- High corrosion (ZAM®), unpainted steel bottom frame and legs
- Wire fan discharge grille
- Top and side maintenance access
- When properly anchored, meets the 2023 Florida Building Code unit integrity requirements for hurricane-type winds (Anchor bracket kits available.)

ENERGY STAR COLD CLIMATE

12 YEAR UNIT REPLACEMENT LIMITED WARRANTY*

12 YEAR PARTS LIMITED WARRANTY*

Intertek

* Complete warranty details available from your local dealer or at www.daikincomfort.com. To receive the 12-Year Unit Replacement Limited Warranty and 12-Year Parts Limited Warranty, online registration must be completed within 60 days of installation. Additional requirements for annual maintenance are required for the Unit Replacement Limited Warranty. Online registration and some of the additional requirements are not required in California or Quebéc. The duration of warranty coverage in Texas and Florida differs in some cases.

DAIKIN RESIDENTIAL HEAT PUMPS

DAIKIN

PRODUCT SPECIFICATIONS

	DH7VSA 2410A*	DH7VSA 3610A*"	DH7VSA 4210A*	DH7VSA 4810A*
CAPACITIES (AHRI RATED)				
Max. Cooling (BTU/h)-95F	23,200	35,000	41,000	46,500
Max. Heating (BTU/h)-47F	23,200	35,000	41,000	47,500
Max. Heating (BTU/h)-5F	17,000	29,000	31,000	33,600
AMBIENT OPERATION RANGE				
Cooling (°FDB(°CDB))	'0 to 115 (-17.8 to 46.1)			
Heating (°FDB(°CDB))	'-10 to 70 (-23.3 to 21.1)			
COMPRESSOR				
Type	Swing	Swing	Swing	Swing
CONDENSER FAN MOTOR				
Horsepower	0.09	0.09	0.20	0.20
REFRIGERATION SYSTEM				
Refrigerant Line Size[1]				
Liquid Line Size ("O.D.)	⅜"	⅜"	⅜"	⅜"
Suction Line Size ("O.D.)	⅞"	1⅛"	1⅛"	1⅛"
Refrigerant Connection Size				
Liquid Valve Size ("O.D.)	⅜"	⅜"	⅜"	⅜"
Suction Valve Size ("O.D.)	⅞"	⅞"	⅞"	⅞"
Valve Connection Type	Front Sealing	Front and Back Sealing	Front and Back Sealing	Front and Back Sealing
Refrigerant Charge (oz.)	76	100	118	118
Expansion Device	EEV	EEV	EEV	EEV
Superheat at Service Valve	Auto-control	Auto-control	Auto-control	Auto-control
Subcooling at Service Valve	14±1°F	9±1°F	9±1°F	9±1°F
ELECTRICAL DATA				
Voltage / Phase (60 Hz)	208-230/1	208-230/1	208-230/1	208-230/1
Fan/Compressor Inverter Drive Input	17.6	25.4	30	30
Minimum Circuit Ampacity[2]	22.4	31.8	37.5	37.5
Max. Overcurrent Protection[3]	25	35	40	40
Min / Max Volts	197/253	197/253	197/253	197/253
Electrical Conduit Size	½"	½" or ¾"	½" or ¾"	½" or ¾"
EQUIPMENT WEIGHT (LBS)	132	168	179	179
SHIP WEIGHT (LBS)	147	185	198	198
ENERGY STAR® CERTIFIED	ENERGY STAR COLD CLIMATE	ENERGY STAR COLD CLIMATE	ENERGY STAR COLD CLIMATE	ENERGY STAR COLD CLIMATE

[1] Tested and rated in accordance with AHRI Standard 210/240

[2] Wire size should be determined in accordance with National Electrical Codes; extensive wire runs will require larger wire sizes

[3] Must use time-delay fuses or HACR-type circuit breakers of the same size as noted.

NOTES

- Always check the S&R plate for electrical data on the unit being installed.
- Installer will need to supply ⅞" to 1⅛" adapters for suction line connections.
- Unit is charged with refrigerant for 15' of ⅜" liquid line. System charge must be adjusted per Installation Instructions Final Charge Procedure. (See table below for allowable line set diameter)

ENERGY STAR NOTES

Proper sizing and installation of equipment is critical to achieving optimal performance. Split system air conditioners and heat pumps must be matched with appropriate coil components to meet **ENERGY STAR** criteria. Ask your contractor for details or visit www.energystar.gov. The www.energystar.gov website provides up-to-date system combinations certified to meet **ENERGY STAR** requirements.

UNIT TONS	ALLOWABLE LINE SET DIAMETER						
	LIQUID			SUCTION			
	¼	5/16	⅜	⅝	¾	⅞	1⅛
2.0		x	x		x*1	x	
3.0			x			x	x
3.5			x			x	x
4.0			x			x	x

x Allowable combination

*1:For marked combinations, if normal ambient operation temperature is less than 14°F, limit line set length to 50 ft. max.

OUTDOOR UNIT	DH7VS*421*A* / DH7VS*481*A*	TRIM MORE THAN 5% SETTINGS ARE INVALID. TRIMMED UP CFM MAKES MISS MATCHING ERROR.
INDOOR UNIT	D*96TC0804C D*97MC0804C D*80TC0804C	

DAIKIN RESIDENTIAL HEAT PUMPS

DAIKIN

DZ16SA

Cooling Capacity: 23,000 to 57,000 BTU/h
Heating Capacity: 22,600 to 57,000 BTU/h

Split-System Heat Pump
Up to 16 SEER & 9.5 HSPF



Standard Features

- High-efficiency Copeland® scroll compressor
- Advanced Copeland® CoreSense™ technology
- High density foam compressor sound blanket
- Time-delay technology to ensure quiet reliable defrost
- Factory-installed bi-flow liquid line filter drier
- Factory-installed suction line accumulator
- Factory-installed compressor crank case heater
- Factory-installed high capacity muffler
- High- and low-pressure switches
- Service valves with sweat connections and easy access to gauge ports
- Copper tube/enhanced aluminum fin coil
- Fully charged for 15' of tubing length
- AHRI Certified; ETL Listed

Cabinet Features

- Grille-style sound control top design
- Custom Nickel Gray powder-paint finish
- 500-hour salt-spray tested
- Wire fan discharge grille
- Steel louver coil guard
- Rust-resistant screws
- Top and side maintenance access
- Single-panel access to controls with space provided for field-installed accessories
- When properly anchored, meets the 2010 Florida Building Code unit integrity requirements for hurricane-type winds (Anchor bracket kits available.)

ASK ABOUT ENERGY STAR

Proper sizing and installation of equipment is critical to achieve optimal performance. Split system air conditioners and heat pumps must be matched with appropriate coil components to meet ENERGY STAR® criteria. Ask your contractor for details or visit www.energystar.gov.

6 YEAR UNIT REPLACEMENT LIMITED WARRANTY

12 YEAR* PARTS LIMITED WARRANTY

Intertek

* Complete warranty details available from your local dealer or at www.daikincomfort.com. To receive the 6-Year Unit Replacement Limited Warranty and 12-Year Parts Limited Warranty, online registration must be completed within 60 days of installation. Additional requirements for annual maintenance are required for the Unit Replacement Limited Warranty. Online registration and some of the additional requirements are not required in California or Quebec.

DAIKIN RESIDENTIAL HEAT PUMPS

DAIKIN

DZ16SA SPECIFICATION

	DZ16SA 0181B*	DZ16SA 0241B*	DZ16SA 0301B*	DZ16SA 0361B*	DZ16SA 0421B*	DZ16SA 0481B*	DZ16SA 0601B*
NOMINAL CAPACITIES							
Cooling (BTU/h)	18,000	24,000	30,000	36,000	42,000	48,000	60,000
Heating (BTU/h)	18,000	24,000	30,000	36,000	42,000	48,000	60,000
SEER / EER	16/13	16/13	16/13	16/13	16/13	16/13	16/12.5
Decibels	71	74	74	72	72	73	75
COMPRESSOR							
RLA	9.0	10.9	13.4	14.1	16.7	19.9	28.8
LRA	47.5	62.9	72.5	72.2	109.0	109.0	152.9
Type	Scroll	Scroll	Scroll	Scroll	Scroll	Scroll	Scroll
CONDENSER FAN MOTOR							
Horsepower	1/6	1/6	1/6	1/4	1/4	1/4	1/6
FLA	0.95	1.1	1.1	1.3	1.2	1.3	1.0
REFRIGERATION SYSTEM							
Refrigerant Line Size[1]							
Liquid Line Size (“O.D.)	3/8"	3/8"	3/8"	3/8"	3/8"	3/8"	3/8"
Suction Line Size (“O.D.)	3/4"	3/4"	3/4"	7/8"	1 1/8"	1 1/8"	1 1/8"
Refrigerant Connection Size							
Liquid Valve Size (“O.D.)	3/8"	3/8"	3/8"	3/8"	3/8"	3/8"	3/8"
Suction Valve Size (“O.D.)	3/4"	3/4"	7/8”	7/8"	7/8”	7/8"	7/8"
Valve Connection Type	Sweat	Sweat	Sweat	Sweat	Sweat	Sweat	Sweat
Refrigerant Charge (oz.)	140	150	160	175	180	231	291
ELECTRICAL DATA							
Volts/Phase (60 Hz)	208/230	208/230	208/230	208/230	208/230	208/230	208/230
Minimum Circuit Ampacity [2]	12.2	14.7	18.0	18.9	22.1	26.2	37
Max. Overcurrent Protection [3]	20	25	30	30	35	45	60
Min / Max Volts	197/253	197/253	197/253	197/253	197/253	197/253	197/253
Electrical Conduit Size	1/2" or 3/4"	1/2" or 3/4"	1/2" or 3/4"	1/2" or 3/4"	1/2" or 3/4"	1/2" or 3/4"	1/2" or 3/4"
UNIT WEIGHTS							
Equipment Weight (lbs)	174	180	186	220	226	250	306
Shipping Weight (lbs)	189	200	206	240	237	270	326
ENERGY STAR® CERTIFIED [4]	ENERGY STAR	ENERGY STAR	ENERGY STAR	ENERGY STAR	ENERGY STAR	ENERGY STAR	NO

[1] Tested and rated in accordance with AHRI Standard 210/240.

[2] Wire size should be determined in accordance with National Electrical Codes; extensive wire runs will require larger wire sizes.

[3] Must use time-delay fuses or HACR-type circuit breakers of the same size as noted.

[4] Proper sizing and installation of equipment is critical to achieving optimal performance. Split system air conditioners and heat pumps must be matched with appropriate coil components to meet ENERGY STAR criteria. Ask your contractor for details or visit www.energystar.gov.
The www.energystar.gov website provides up-to-date system combinations certified to meet ENERGY STAR requirements.
See Page 21 for all ENERGY STAR certified combinations as of this document’s revision date.

NOTES

- Always check the S&R plate for electrical data on the unit being installed.
- Installer will need to supply ⅞” to 1⅛” adapters for suction line connections.
- Unit is charged with refrigerant for 15’ of ⅜” liquid line. System charge must be adjusted per Installation Instructions Final Charge Procedure.
- Installation of these units requires the specified TXV Kit to be installed on the indoor coil. THE SPECIFIED TXV IS DETERMINED BY THE OUTDOOR UNIT NOT THE INDOOR COIL.

DAIKIN RESIDENTIAL HEAT PUMPS

DAIKIN

DZ16TC

Cooling Capacity: 23,000 - 57,000 BTU/h
Heating Capacity: 23,000 - 57,000 BTU/h

High-Efficiency,
ComfortNet-Compatible,
Split System heat Pump
Up to 17 SEER & Up to 9.7 HSPF



■ *Standard Features*

- Two-Stage Copeland® UltraTech scroll compressor
- High-density foam compressor sound blanket
- ComfortNet™ Communications System compatible
- Advanced Copeland CoreSense™ Technology
- Efficient ECM condenser fan motor on 5-ton model
- Simple low-voltage wiring to outdoor unit in communicating mode
- Diagnostic indicator lights and storage of six fault codes
- Color-coded terminal strip for non-communicating set-up
- High- and low-pressure switches
- Time-delay technology to ensure quiet, reliable defrost
- Factory-installed bi-flow liquid-line filter drier
- Factory-installed suction-line accumulator
- Factory-installed compressor crankcase heater
- Factory-installed high-capacity muffler
- Factory-installed coil and ambient temperature sensors
- Sweat connection service valves with easy access to gauge ports
- AHRI Certified; ETL Listed

■ *Cabinet Features*

- Grille-style sound control top design
- Custom Nickel Gray powder-paint finish
- 500-hour salt-spray tested
- Wire fan discharge grille
- Steel louver coil guard
- Single-panel access to controls with space provided for field-installed accessories
- When properly anchored, meets 2010 Florida Building Code unit integrity requirements for hurricane-type winds (Anchor bracket kits available.)

Proper sizing and installation of equipment is critical to achieve optimal performance. Split system air conditioners and heat pumps must be matched with appropriate coil components to meet ENERGY STAR® criteria. Ask your contractor for details or visit www.energystar.gov.

12 YEAR UNIT REPLACEMENT LIMITED WARRANTY* 12 YEAR PARTS LIMITED WARRANTY* ComfortNet™ c ETL LISTED us Intertek

* Complete warranty details available from your local dealer or at www.daikincomfort.com. To receive the 12-Year Unit Replacement Limited Warranty and 12-Year Parts Limited Warranty, online registration must be completed within 60 days of installation. Additional requirements for annual maintenance are required for the Unit Replacement Limited Warranty. Online registration and some of the additional requirements are not required in California or Quebec.

DAIKIN RESIDENTIAL HEAT PUMPS

DAIKIN

DZ16TC SPECIFICATION

	DZ16TC 0241C*	DZ16TC 0361C*	DZ16TC 0481C*	DZ16TC 0601C*
Capacities and Ratings				
Nominal Cooling (BTU/h)	24,000	36,000	48,000	60,000
Nominal Heating (BTU/h)	24,000	36,000	48,000	60,000
Decibels	73	73	75	75
Compressor				
RLA	10.0	14.8	20.4	22.9
LRA	62.9	84.2	122.1	147.2
Condenser Fan Motor				
Horsepower	1/5	1/5	1/5	1/3
FLA	1.0	1.0	1.0	2.8
Refrigeration System				
Refrigerant Line Size				
Liquid Line Size (“O.D.)	⅜"	⅜"	⅜"	⅜"
Suction Line Size (“O.D.)	¾"	⅞"	1⅛"	1⅛"
Refrigerant Connection Size				
Liquid Valve Size (“O.D.)	⅜"	⅜"	⅜"	⅜"
Suction Valve Size (“O.D.)	¾"	⅞"	⅞"	⅞"
Valve Connection Type	Sweat	Sweat	Sweat	Sweat
Refrigerant Charge (oz.)	176	170	244	288
Electrical Data				
Volts -Phase (60 Hz)	208/230-1	208/230-1	208/230-1	208/230-1
Minimum Circuit Ampacity [2]	13.5	19.5	26.5	31.4
Max. Overcurrent Protection [3]	20	30	45	50
Min / Max Volts	197/253	197/253	197/253	197/253
Power Supply Conduit Size	½" or ¾"	½" or ¾"	½" or ¾"	½" or ¾"
Equipment Weight (lbs)	215	240	291	313
Ship Weight (lbs)	240	266	316	339
ENERGY STAR Certified ^				

[1] Tested and rated in accordance with AHRI Standard 210/240

[2] Wire size should be determined in accordance with National Electrical Codes; extensive wire runs will require larger wire sizes

[3] Must use time-delay fuses or HACR-type circuit breakers of the same size as noted.

Notes

- Always check the rating plate for electrical data on the unit being installed.
- Installer will need to supply ⅞” to 1⅛” adapters for suction line connections.
- Unit is charged with refrigerant for 15’ of ⅜” liquid line. System charge must be adjusted per Installation Instructions Final Charge Procedure.
- Installation of these units requires the specified TXV Kit to be installed on the indoor coil.
  THE SPECIFIED TXV IS DETERMINED BY THE OUTDOOR UNIT, NOT THE INDOOR COIL.

^ ENERGY STAR Notes

- Proper sizing and installation of equipment is critical to achieve optimal performance. Split system air conditioners and heat pumps must be matched with appropriate coil components to meet ENERGY STAR® criteria. Ask your contractor for details or visit www.energystar.gov.
- The www.energystar.gov website provides up-to-date system combinations certified to meet ENERGY STAR requirements. See Page 22 for all ENERGY STAR-certified combinations as of this document’s revision date.

DAIKIN RESIDENTIAL HEAT PUMPS

DAIKIN

DZ20VC

Cooling Capacity: 23,800 - 52,500 BTU/h
Heating Capacity: 23,800 - 52,000 BTU/h

High-Efficiency, ComfortNet™-Compatible, Split System Heat Pump Up to 21 SEER



Standard Features

- Daikin variable-speed swing and scroll compressors
- High-density foam compressor sound blanket
- ***ComfortNet™*** Communications System compatible
- Daikin control algorithmic logic
- In communicating mode, only two low-voltage wires to outdoor unit required
- Diagnostic indicator lights, seven-segment LED display, and fault code storage
- Daikin Inside intelligence for diagnostics
- Field-selectable boost mode increases compressor speed during unusually high loads
- Quiet ECM outdoor fan motor
- Fully charged for 15' of tubing length
- Field-installed bi-flow filter drier
- Coil and ambient temperature sensors
- Suction pressure transducer
- Sweat connection service valves with easy access to gauge ports
- AHRI Certified; ETL Listed

Cabinet Features

- Grille-style sound control top design
- Custom Nickel Gray powder-paint finish
- 500-hour salt-spray tested
- Wire fan discharge grille
- Steel louver coil guard
- Heavy-gauge galvanized-steel cabinet
- Top and side maintenance access
- Single-panel access to controls with space provided for field-installed accessories
- When properly anchored, meets the 2010 Florida Building Code unit integrity requirements for hurricane-type winds (Anchor bracket kits available.)

ASK ABOUT ENERGY STAR

Proper sizing and installation of equipment is critical to achieving optimal performance. Split system air conditioners and heat pumps must be matched with appropriate coil components to meet ENERGY STAR® criteria. Ask your contractor for details or visit www.energystar.gov.

12 YEAR UNIT REPLACEMENT LIMITED WARRANTY * 12 YEAR PARTS LIMITED WARRANTY *

Intertek

* Complete warranty details available from your local dealer or at www.daikincomfort.com. To receive the 12-Year Unit Replacement Limited Warranty and 12-Year Parts Limited Warranty, online registration must be completed within 60 days of installation. Additional requirements for annual maintenance are required for the Unit Replacement Limited Warranty. Online registration and some of the additional requirements are not required in California or Quebec.

DAIKIN RESIDENTIAL HEAT PUMPS

DAIKIN

DZ20VC SPECIFICATION

	DZ20VC 0241B*	DZ20VC 0361B*	DZ20VC 0481B*	DZ20VC 0601B*
CAPACITIES AND RATINGS				
Max Cooling (BTU/h)	23,800	35,400	46,500	52,500
Max Heating (BTU/h)	23,800	35,000	46,000	52,000
COMPRESSOR				
Type	Swing	Swing	Swing	Scroll
RLA	12.70	27.30	27.30	28.60
CONDENSER FAN MOTOR				
Horsepower	1/2	1/2	1/2	1/2
FLA	2.5	2.5	2.5	2.5
REFRIGERATION SYSTEM				
Refrigerant Line Size				
Liquid Line Size (“O.D.)	⅜"	⅜"	⅜"	⅜"
Suction Line Size (“O.D.)	¾"	⅞"	1⅛"	1⅛"
Refrigerant Connection Size				
Liquid Valve Size (“O.D.)	⅜"	⅜"	⅜"	⅜"
Suction Valve Size (“O.D.)	¾"	⅞"	⅞"	⅞"
Valve Connection Type	Ball Valve	Ball Valve	Ball Valve	Ball Valve
Refrigerant Charge (oz.)	165	272	272	242
Superheat at Service Valve	7-9°F	7-9°F	7-9°F	7-9°F
Subcooling at Service Valve	7-9°F	7-9°F	7-9°F	7-9°F
ELECTRICAL DATA				
Volts-Phase (60 Hz)	208-230/1	208-230/1	208-230/1	208-230/1
Minimum Circuit Ampacity [2]	15.2	29.8	29.8	31.1
Max. Overcurrent Protection [3]	20	30	30	35
Min / Max Volts	197/253	197/253	197/253	197/253
Electrical Conduit Size	½" or ¾"	½" or ¾"	½" or ¾"	½" or ¾"
EQUIPMENT WEIGHT (LBS)	217	291	291	333
SHIP WEIGHT (LBS)	243	318	318	360
ENERGY STAR® CERTIFIED	Most Efficient 2019	Most Efficient 2019	Most Efficient 2019	Most Efficient 2019

ENERGY STAR NOTES

- Products that are recognized as the Most Efficient of ENERGY STAR® in 2018 prevent greenhouse gas emissions by meeting rigorous energy efficiency performance levels set by the U.S. Environmental Protection Agency.
- Proper sizing and installation of equipment is critical to achieving optimal performance. Split system air conditioners and heat pumps must be matched with appropriate coil components to meet ENERGY STAR criteria. Ask your contractor for details or visit www.energystar.gov.
- The www.energystar.gov website provides up-to-date system combinations certified to meet ENERGY STAR requirements. See Page 26 for all ENERGY STAR certified combinations as of this document’s revision date.

[1] Tested and rated in accordance with ANSI/AHRI Standard 210/240

[2] Wire size should be determined in accordance with National Electrical Codes; extensive wire runs will require larger wire sizes

[3] Must use time-delay fuses or HACR-type circuit breakers of the same size as noted.

NOTES

- Always check the S&R plate for electrical data on the unit being installed.
- Installer will need to supply ⅞” to 1⅛” adapters for suction line connections.
- Unit is charged with refrigerant for 15’ of ⅜” liquid line. System charge must be adjusted per Installation Instructions Final Charge Procedure.

DAIKIN RESIDENTIAL FURNACES

DAIKIN

DM96VC



TWO-STAGE, VARIABLE-SPEED
ECM GAS FURNACE
UP TO 96% AFUE
HEATING INPUT: 40,000–120,000 BTU/H

Standard Features

- *ComfortNet™* communicating system compatible
- Heavy-duty stainless-steel tubular heat exchanger
- Stainless-steel secondary heat exchanger
- Two-stage gas valve provides quiet, economical heating
- Durable Silicon Nitride igniter
- Quiet two-speed induced draft blower
- Utilizes ComfortNet™ communicating, two-stage or single-stage thermostats
- Self-diagnostic control board with constant memory fault code history output to a dual 7-segment display
- Color-coded low-voltage terminals with provisions for electronic air cleaner and humidifier
- Efficient and quiet variable-speed airflow system gently ramps up or down according to heating or cooling demand
- Multiple continuous fan speed options offer quiet air circulation
- Auto-Comfort and enhanced dehumidification modes available
- All models comply with California 40 ng/J Low NOx emissions standard
- For installation in California's South Coast Air Quality Management District (SCAQMD) only: This furnace does not meet the SCAQMD Rule 1111 14 ng/J NOx emission limit, and thus is subject to a mitigation fee of up to $450. This furnace is not eligible for the SCAQMD Clean Air Furnace Rebate Program: www.CleanAirFurnaceRebate.com.
- AHRI Certified; ETL Listed

Cabinet Features

- Designed for multi-position installation — upflow, horizontal left or right
- Certified for direct vent (2-pipe) or non-direct vent (1-pipe)
- Easy-to-install top venting with optional side venting
- Convenient left or right connection for gas and electrical service
- Cabinet air leakage (QLeak) ≤ 2%
- Heavy-gauge steel cabinet with durable finish
- Fully insulated heat exchanger and blower section
- Airtight solid bottom or side return with easy-cut tabs for effortless removal in bottom air-inlet applications

* Complete warranty details available from your local dealer or at www.daikincomfort.com. To receive the Lifetime Heat Exchanger LimitedWarranty (good for as long as you own your home), the 12-Year Unit Replacement Limited Warranty and the 12-Year Parts Limited Warranty, online registration must be completed within 60 days of installation. Additional requirements for annual maintenance are required for the Unit Replacement Limited Warranty. Online registration and some of the additional requirements are not required in California or Quebec.

DAIKIN RESIDENTIAL FURNACES

DAIKIN

DM96VC SPECIFICATION

	DM96VC 0403BNA	DM96VC 0603BNA	DM96VC 0803BNA	DM96VC 0804CNA	DM96VC 1005CNA	DM96VC 1005DNA	DM96VC 1205DNA
HEATING DATA							
High Fire Input[1]	40,000	60,000	80,000	80,000	100,000	100,000	120,000
High Fire Output[1]	38,400	57,600	76,800	76,800	96,000	96,000	115,200
Low-Fire Steady-State Input[1]	28,000	42,000	56,000	56,000	70,000	70,000	84,000
Low-Fire Steady-State Output[1]	26,880	40,320	53,760	53,760	67,200	67,200	80,640
AFUE[2]	96	96	96	96	96	96	96
Temperature Rise Range (°F)	20 - 50	35 - 65	35 - 65	25 - 55	35 - 65	30 - 60	35 - 65
Vent Diameter[3]	2" - 3"	2" - 3"	2" - 3"	2" - 3"	2" - 3"	2" - 3"	2" - 3"
NO. OF BURNERS	2	3	4	4	5	5	6
CIRCULATOR BLOWER							
Available AC @ 0.5" ESP	1.5 - 3	1.5 - 3	1.5 - 3	1.5 - 4	2 - 5	2 - 5	2 - 5
Size (D x W)	10" x 8"	11" x 8"	11" x 8"	11" x 10"	11" x 10"	11" x 11"	11" x 11"
Horsepower @ 1075 RPM	½	1	½	¾	1	1	1
Speed	VS ECM	VS ECM	VS ECM	VS ECM	VS ECM	VS ECM	VS ECM
ELECTRICAL DATA							
Min. Circuit Ampacity[4]	7.8	7.8	7.8	10.6	14.4	14.4	14.4
Max. Overcurrent Device (amps)[5]	15	15	15	15	20	20	20
SHIPPING WEIGHT (LBS)	114	117	120	141	143	153	156

1 Natural Gas BTU/h

2 DOE AFUE based upon Isolated Combustion System (ICS)

3 Installer must supply one or two PVC pipes: one for combustion air (optional) and one for the flue outlet (required). Vent pipe must be either 2" or 3" in diameter, depending upon furnace input, number of elbows, length of run and installation (1 or 2 pipes). The optional Combustion Air Pipe is dependent on installation/code requirements and must be 2" or 3" diameter PVC.

4 Minimum Circuit Ampacity = (1.25 x Circulator Blower Amps) + ID Blower amps. Wire size should be determined in accordance with National Electrical Codes. Extensive wire runs will require larger wire sizes.

5 Maximum Overcurrent Protection Device refers to maximum recommended fuse or circuit breaker size. May use fuses or HACR-type circuit breakers of the same size as noted.

NOTES

- All furnaces are manufactured for use on 115 VAC, 60 Hz, single-phase electrical supply.
- Gas Service Connection ½" FPT
- Important: Size fuses and wires properly and make electrical connections in accordance with the National Electrical Code and/or all existing local codes.
- For bottom return: Failure to unfold flanges may reduce airflow by up to 18%. This could result in performance and noise issues.
- For servicing or cleaning, a 24" front clearance is required. Unit connections (electrical, flue and drain) may necessitate greater clearances than the minimum clearances listed above. In all cases, accessibility clearance must take precedence over clearances from the enclosure where accessibility clearances are greater.

DAIKIN

DM96TN / DC96TN

DAIKIN

DR96TN / DD96TN

TWO-STAGE, 9-SPEED
ECM GAS FURNACE
UP TO 96% AFUE

HEATING INPUT: 30,000 –120,000 BTU/H



R32

Standard Features

- Heavy-duty stainless-steel tubular heat exchanger
- Stainless-steel secondary heat exchanger
- Two-stage gas valve provides quiet, economical heating
- Durable Silicon Nitride igniter
- Quiet two-speed induced draft blower
- Self-diagnostic control board with constant memory fault history output to a 3-digit 7 segment LED display and push buttons
- Energy-efficient multi-speed (9-speed tap) ECM blower motor
- Multiple continuous fan speed options offer quiet air circulation
- Color-coded low-voltage terminals with provisions for electronic air cleaner and humidifier
- AHRI Certified; ETL Listed
- All models comply with CA Low NOx standards
- Can not be installed in California's South Coast Air Quality Management District (SCAQMD) and San Joaquin Valley Air Pollution Control District (SJVAPCD).

Cabinet Features

- Designed for multi-position installation — DR96TN: upflow, horizontal left or right DD96TN: downflow, horizontal left or right
- Certified for direct vent (2-pipe) or non-direct vent (1-pipe)
- Easy-to-install top venting with optional side venting — DR96TN/upflow models only
- Convenient left or right connection for gas and electrical service
- Cabinet air leakage (Q_{Leak}) ≤ 2%
- Heavy-gauge steel cabinet with durable finish
- Fully insulated heat exchanger and blower section
- Airtight solid bottom or side return with easy-cut tabs for effortless removal in bottom air-inlet applications

LIFETIME HEAT EXCHANGER LIMITED WARRANTY* | 12 YEAR UNIT REPLACEMENT LIMITED WARRANTY* | 12 YEAR PARTS LIMITED WARRANTY* | ETL LISTED Intertek | AHRI CERTIFIED | ISO 9001

* Complete warranty details available from your local dealer or at www.daikincomfort.com. To receive the Lifetime Heat Exchanger Limited Warranty (good for as long as you own your home), the 12-Year Unit Replacement Limited Warranty and the 12-Year Parts Limited Warranty, online registration must be completed within 60 days of installation. Additional requirements for annual maintenance are required for the Unit Replacement Limited Warranty. Online registration and some of the additional requirements are not required in California or Québec. The duration of warranty coverages in Texas differs in some cases.

DAIKIN RESIDENTIAL FURNACES

DAIKIN

DR96TN / DD96TN SPECIFICATION

	DR96TN 0303ANA	DR96TN 0403ANA	DR96TN 0603ANA	DR96TN 0603BNA	DR96TN 0803BNA	DR96TN 0804CNA	DR96TN 1004CNA	DR96TN 1005CNA	DR96TN 1205DNA
HEATING DATA									
High Fire Input[1]	30,000	40,000	60,000	60,000	80,000	80,000	100,000	100,000	120,000
High Fire Output[1]	28,800	38,400	57,600	57,600	76,800	76,800	96,000	96,000	115,200
Low-Fire Steady-State Input[1]	21,000	28,000	42,000	42,000	56,000	56,000	70,000	70,000	84,000
Low-Fire Steady-State Output[1]	20,160	26,880	40,320	40,320	53,760	53,760	67,200	67,200	80,640
AFUE[2]	96	96	96	96	96	96	96	96	96
Temperature Rise Range (°F)	20 - 50	20 - 50	30 - 60	35 - 65	35 - 65	25 - 55	35 - 65	35 - 65	35 - 65
Vent Diameter[3]	2" - 3"	2" - 3"	2" - 3"	2" - 3"	2" - 3"	2" - 3"	2" - 3"	2" - 3"	2" - 3"
No. of Burners	2	2	3	3	4	4	5	5	6
CIRCULATOR BLOWER									
Available AC @ 0.5" ESP	1.5 - 2	1.5 - 3	1.5 - 3	1.5 - 3	1.5 - 3	2.5 - 4	1.5 - 4	3 - 5	3 - 5
Size (D x W)	11" x 6"	11" x 6"	11" x 6"	11" x 8"	11" x 8"	11" x 10"	11" x 10"	11" x 10"	11" x 11"
Horsepower @ 1075 RPM	1/2	1/2	1/2	1/2	1/2	3/4	1	1	1
No. of speeds	9	9	9	9	9	9	9	9	9
FILTER SIZE (IN²) (QTY)	(1) 16 x 25 (side) or (1) 14 x 25 (bottom)	(1) 16 x 25 (side) or (1) 14 x 25 (bottom)	(1) 16 x 25 (side) or (1) 14 X 25 (bottom)	(1) 16 x 25 (side or bottom)	(1) 16 x 25 (side or bottom)	(1) 16 x 25 (side or bottom)	(1) 16 x 25 (side or bottom)	(1) 20 x 25 (bottom) or (2) 16 x 25 (side)	(1) 20 x 25 (bottom) or (2) 16 x 25 (side)
ELECTRICAL DATA									
Min. Circuit Ampacity[4]	7.8	7.8	7.8	7.8	7.8	11.4	14.4	14.4	14.4
Max. Overcurrent (amps)[5]	15	15	15	15	15	20	25	25	25
SHIPPING WEIGHT (LBS)	106	106	110	115	118	123	140	140	154

[1] Natural Gas BTU/h; for altitudes 0-4500' above sea level, reduce input rating by 4% for each 1000' above 4500' altitude.

[2] DOE AFUE based upon Isolated Combustion System (ICS)

[3] Vent and combustion air diameters may vary depending upon vent length. Refer to the latest editions of the National Fuel Gas Code NFPA 54/ANSI Z223.1 (in the USA) and the Canada National Standard of Canada, CAN/CSA B149.1 and CAN/CSA B142.2 (in Canada).

[4] Minimum Circuit Ampacity = (1.25 x Circulator Blower Amps) + ID Blower amps. Wire size should be determined in accordance with National Electrical Codes. Extensive wire runs will require larger wire sizes.

[5] Maximum Overcurrent Protection Device refers to maximum recommended fuse or circuit breaker size. May use fuses or HACR-type circuit breakers of the same size as noted.

NOTES

- All furnaces are manufactured for use on 115 VAC, 60 Hz, single-phase electrical supply.
- Gas Service Connection ½" FPT
- Important: Size fuses and wires properly and make electrical connections in accordance with the National Electrical Code and/or all existing local codes.
- For bottom return: Failure to unfold flanges may reduce airflow by up to 18%. This could result in performance and noise issues.
- For servicing or cleaning, a 24" front clearance is required. Unit connections (electrical, flue and drain) may necessitate greater clearances than the minimum clearances listed above. In all cases, accessibility clearance must take precedence over clearances from the enclosure where accessibility clearances are greater.

DAIKIN

DR96SN

DAIKIN

DR96SN / DD96SN



Single-Stage, 9-Speed ECM Gas Furnace Up to 97% AFUE

Heating Input: 40,000 –120,000 BTU/H

Contents

Nomenclature 2
Product Specifications 3
Dimensions 5
Airflow Data 7
– DR96SN 7
– DD96SN 10
Wiring Diagram 13
Accessories 15

R32

Standard Features

- Heavy-duty stainless-steel tubular heat exchanger
- Stainless-steel secondary heat exchanger
- Single-stage gas valve
- Durable Silicon Nitride igniter
- Quiet, single-speed draft inducer
- Self-diagnostic control board with constant memory fault history output to a 3-digit 7 segment LED display and push buttons
- Energy-efficient multi-speed (9-speed tap) ECM blower motor
- Multiple continuous fan speed options offer quiet air circulation
- AHRI Certified; ETL Listed
- All models comply with CA Low NOx standards
- Can not be installed in California's South Coast Air Quality Management District (SCAQMD) and San Joaquin Valley Air Pollution Control District (SJVAPCD).

Cabinet Features

- Designed for multi-position installation:
  DR96SN: upflow, horizontal left or right
  DD96SN: downflow, horizontal left or right
- Certified for direct vent (2-pipe) or non-direct vent (1-pipe)
- Easy-to-install top venting with optional side venting
- Convenient left or right connection for gas and electrical service
- Cabinet air leakage (Q_{Leak}) ≤ 2%
- Heavy-gauge steel cabinet with durable finish
- Fully insulated heat exchanger and blower section
- Airtight solid bottom or side return with easy-cut tabs for effortless removal in bottom air-inlet applications

LIFETIME HEAT EXCHANGER LIMITED WARRANTY* | 6 YEAR UNIT REPLACEMENT LIMITED WARRANTY | 12 YEAR PARTS LIMITED WARRANTY* | ETL LISTED c US Intertek | AUDI AIR CERTIFIED | ISO 9001

* Complete warranty details available from your local dealer or at www.daikincomfort.com. To receive the Lifetime Heat Exchanger Limited Warranty (good for as long as you own your home), the 6-Year Unit Replacement Limited Warranty and the 12-Year Parts Limited Warranty, online registration must be completed within 60 days of installation. Additional requirements for annual maintenance are required for the Unit Replacement Limited Warranty. Online registration and some of the additional requirements are not required in California or Québec. The duration of warranty coverages in Texas differs in some cases.

DAIKIN RESIDENTIAL FURNACES

DAIKIN

DR96SN SPECIFICATION

	DR96SN 0403AN	DR96SN 0603BN	DR96SN 0803BN	DR96SN 0804CN	DR96SN 0805CN	DR96SN 1005CN	DR96SN 1205DN
HEATING DATA							
High Fire Input[1]	40,000	60,000	80,000	80,000	80,000	100,000	120,000
High Fire Output[1]	38,800	58,200	76,880	77,600	77,600	96,100	115,320
AFUE[2]	97	97	96	97	97	96	96
Temperature Rise Range (°F)	25-55	30-60	35-65	25-55	25-55	30-60	35-65
Vent Diameter[3]	2" - 3"	2" - 3"	2" - 3"	2" - 3"	2" - 3"	2" - 3"	3"
NO. OF BURNERS	2	3	4	4	4	5	6
CIRCULATOR BLOWER							
Available AC @ 0.5" ESP	1.5 - 3	1.5 - 3	1.5 - 3	1.5 - 4	3 - 5	3 - 5	3 - 5
Size (D x W)	11" x 6"	11" x 8"	11" x 8"	11" x 10"	11" x 10"	11" x 10"	11" x 11"
Horsepower @ 1075 RPM	½	½	½	¾	1	1	1
No. of Speeds	9	9	9	9	9	9	9
ELECTRICAL DATA							
Min. Circuit Ampacity[4]	9.7	10.1	10.1	13.7	16.7	16.7	16.7
Max. Overcurrent Device (amps)[5]	15	15	15	20	25	25	25
SHIPPING WEIGHT (LBS)	113	116	118	141	142	144	156
ENERGY STAR® CERTIFIED							

[1] Natural Gas BTU/h; for altitudes 0-4500' above sea level, reduce input rating by 4% for each 1000' above 4500' altitude.

[2] DOE AFUE based upon Isolated Combustion System (ICS)

[3] Vent and combustion air diameters may vary depending upon vent length. Refer to the latest editions of the National Fuel Gas Code NFPA 54/ANSI Z223.1 (in the USA) and the Canada National Standard of Canada, CAN/CSA B149.1 and CAN/CSA B142.2 (in Canada).

[4] Minimum Circuit Ampacity = (1.25 x Circulator Blower Amps) + ID Blower amps. Wire size should be determined in accordance with National Electrical Codes. Extensive wire runs will require larger wire sizes.

[5] Maximum Overcurrent Protection Device refers to maximum recommended fuse or circuit breaker size. May use fuses or HACR-type circuit breakers of the same size as noted.

NOTES

- All furnaces are manufactured for use on 115 VAC, 60 Hz, single-phase electrical supply.
- Gas Service Connection ½" FPT
- Important: Size fuses and wires properly and make electrical connections in accordance with the National Electrical Code and/or all existing local codes.
- For bottom return: Failure to unfold flanges may reduce airflow by up to 18%. This could result in performance and noise issues.

ENERGY STAR NOTES

Proper sizing and installation of equipment is critical to achieving optimal performance. Split system air conditioners and heat pumps must be matched with appropriate coil components to meet **ENERGY STAR** criteria. Ask your contractor for details or visit www.energystar.gov. The www.energystar.gov website provides up-to-date system combinations certified to meet **ENERGY STAR** requirements.

DAIKIN RESIDENTIAL FURNACES

DAIKIN

DM97MC / DC97MC



MODULATING, VARIABLE-SPEED
ECM GAS FURNACE
UP TO 98% AFUE

Heating Input: 60,000–120,000 BTU/h

ENERGY STAR® and the ENERGY STAR mark are registered trademarks owned by the U.S. Environmental Protection Agency. ENERGY STAR products are third-party certified by an EPA-recognized Certification Body. Products that are recognized as the Most Efficient of ENERGY STAR in 2019 prevent greenhouse gas emissions by meeting rigorous energy efficiency performance levels set by the U.S.Environmental Protection Agency.

Standard Features

- *ComfortNet™* communicating system compatible
- Heavy-duty stainless-steel tubular heat exchanger
- Stainless-steel secondary heat exchanger
- Self-calibrating modulating gas valve auto-configure for each installation
- Durable Silicon Nitride igniter
- Quiet variable-speed induced draft blower
- Utilizes ComfortNet™ communicating, two-stage or single-stage thermostats
- Self-diagnostic control board with constant memory fault code history output to a dual 7-segment display
- Color-coded low-voltage terminals with provisions for electronic air cleaner and humidifier
- Efficient and quiet variable-speed airflow system gently ramps up or down according to heating or cooling demand
- Multiple continuous fan speed options offer quiet air circulation
- Auto-Comfort and enhanced dehumidification modes available
- All models comply with California 40 ng/J Low NOx emissions standard
- For installation in California's South Coast Air Quality Management District (SCAQMD) only: This furnace does not meet the SCAQMD Rule 1111 14 ng/J NOx emission limit, and thus is subject to a mitigation fee of up to $450. This furnace is not eligible for the SCAQMD Clean Air Furnace Rebate Program: www.CleanAirFurnaceRebate.com.

Cabinet Features

- Designed for multi-position installation — DM97MC: upflow, horizontal left or right DC97MC: downflow, horizontal left or right
- Certified for direct vent (2-pipe) or non-direct vent (1-pipe)
- Easy-to-install top venting with optional side venting
- Convenient left or right connection for gas and electrical service
- Cabinet air leakage (Q_{Leak}) ≤ 2%
- Heavy-gauge steel cabinet with durable finish
- Fully insulated heat exchanger and blower section
- Airtight solid bottom or side return with easy-cut tabs for effortless removal in bottom air-inlet applications

* Complete warranty details available from your local dealer or at www.daikincomfort.com. To receive the Lifetime Heat Exchanger Limited Warranty (good for as long as you own your home), the 12-Year Unit Replacement Limited Warranty and the 12-Year Parts Limited Warranty, online registration must be completed within 60 days of installation. Additional requirements for annual maintenance are required for the Unit Replacement Limited Warranty. Online registration and some of the additional requirements are not required in California or Quebec.

DAIKIN RESIDENTIAL FURNACES

DAIKIN

DM97MC / DC97MC SPECIFICATION

	DM97MC 0603BNA	DM97MC 0803BNA	DM97MC 0804CNA	DM97MC 1005CNA	DM97MC 1205DNA	DC97MC 0603BNA	DC97MC 0803BNA	DC97MC 0804CNA	DC97MC 1005CNA
HEATING DATA									
High Fire Input[1]	60,000	80,000	80,000	100,000	120,000	60,000	80,000	80,000	100,000
High Fire Output[1]	58,800	77,600	78,400	97,000	116,400	58,200	77,600	77,600	97,000
Low-Fire Steady-State Input[1]	30,000	40,000	40,000	50,000	60,000	30,000	40,000	40,000	50,000
Low-Fire Steady-State Output[1]	29,400	38,800	39,200	48,500	58,200	29,100	38,800	38,800	48,500
AFUE[2]	98	97	98	97	97	97	97	97	97
Temperature Rise Range (°F)	25 - 55	30 - 60	25 - 55	35 - 65	35 - 65	35 - 65	35 - 65	35 - 65	35 - 65
Vent Diameter[3]	2" - 3"	2" - 3"	2" - 3"	2" - 3"	2" - 3"	2" - 3"	2" - 3"	2" - 3"	2" - 3"
No. of Burners	3	4	4	5	6	3	4	4	5
CIRCULATOR BLOWER									
Available AC @ 0.5" ESP	1.5 - 3	1.5 - 3	1.5 - 4	2 - 5	2 - 5	1.5 - 3	1.5 - 3	1.5 - 4	2 - 5
Size (D x W)	11" x 8"	11" x 8"	11" x 10"	11" x 10"	11" x 11"	11" x 8"	11" x 8"	11" x 10"	11" x 10"
Horsepower @ 1075 RPM	½	½	¾	1	1	½	½	¾	1
Speed	VS ECM	VS ECM	VS ECM	VS ECM	VS ECM	VS ECM	VS ECM	VS ECM	VS ECM
FILTER SIZE (IN²)									
Permanent	739	766	862	862	1,035	517	690	690	862
Disposable	370	383	431	431	517	259	345	345	431
ELECTRICAL DATA									
Min. Circuit Ampacity[4]	8.8	8.8	11.6	15.4	15.4	8.8	8.8	11.6	15.4
Max. Overcurrent Device (amps)[5]	15	15	15	20	20	15	15	15	20
SHIPPING WEIGHT (LBS)	118	121	142	144	157	117	122	144	146

[1] Natural Gas BTU/h

[2] DOE AFUE based upon Isolated Combustion System (ICS)

[3] Installer must supply one or two PVC pipes: one for combustion air (optional) and one for the flue outlet (required). Vent pipe must be either 2" or 3" in diameter, depending upon furnace input, number of elbows, length of run and installation (1 or 2 pipes). The optional Combustion Air Pipe is dependent on installation/code requirements and must be 2" or 3" diameter PVC.

[4] Minimum Circuit Ampacity = (1.25 x Circulator Blower Amps) + ID Blower amps. Wire size should be determined in accordance with National Electrical Codes. Extensive wire runs will require larger wire sizes.

[5] Maximum Overcurrent Protection Device refers to maximum recommended fuse or circuit breaker size. May use fuses or HACR-type circuit breakers of the same size as noted.

NOTES

- All furnaces are manufactured for use on 115 VAC, 60 Hz, single-phase electrical supply.
- Gas Service Connection ½" FPT
- Important: Size fuses and wires properly and make electrical connections in accordance with the National Electrical Code and/or all existing local codes.
- For bottom return: Failure to unfold flanges may reduce airflow by up to 18%. This could result in performance and noise issues.
- For servicing or cleaning, a 24" front clearance is required. Unit connections (electrical, flue and drain) may necessitate greater clearances than the minimum clearances listed above. In all cases, accessibility clearance must take precedence over clearances from the enclosure where accessibility clearances are greater.

DAIKIN RESIDENTIAL FURNACES

DAIKIN

DC96VC



COMFORTNET™-COMPATIBLE
TWO-STAGE, VARIABLE-SPEED
ECM-BASED GAS FURNACE
UP TO 96% AFUE
HEATING INPUT: 40,000–120,000 BTU/H

■ *Standard Features*

- *ComfortNet™* communicating system compatible
- Heavy-duty stainless-steel tubular heat exchanger
- Stainless-steel secondary heat exchanger
- Two-stage gas valve provides quiet, economical heating
- Durable Silicon Nitride igniter
- Quiet two-speed induced draft blower
- Utilizes ComfortNet™ communicating, two-stage or single-stage thermostats
- Self-diagnostic control board with constant memory fault code history output to a dual 7-segment display
- Color-coded low-voltage terminals with provisions for electronic air cleaner and humidifier
- Efficient and quiet variable-speed airflow system gently ramps up or down according to heating or cooling demand
- Multiple continuous fan speed options offer quiet air circulation
- Auto-Comfort and enhanced dehumidification modes available
- All models comply with California 40 ng/J Low NOx emissions standard
- For installation in California's South Coast Air Quality Management District (SCAQMD) only: This furnace does not meet the SCAQMD Rule 1111 14 ng/J NOx emission limit, and thus is subject to a mitigation fee of up to $450. This furnace is not eligible for the SCAQMD Clean Air Furnace Rebate Program: www.CleanAirFurnaceRebate.com.

■ *Cabinet Features*

- Designed for multi-position installation —downflow, horizontal left or right
- Certified for direct vent (2-pipe) or non-direct vent (1-pipe)
- Convenient left or right connection for gas and electrical service
- Cabinet air leakage (Q_{Leak}) ≤ 2%
- Heavy-gauge steel cabinet with durable finish
- Fully insulated heat exchanger and blower section
- Airtight solid bottom or side return with easy-cut tabs for effortless removal in bottom air-inlet applications

* Complete warranty details available from your local dealer or at www.daikincomfort.com. To receive the Lifetime Heat Exchanger Limited Warranty (good for as long as you own your home), the 12-Year Unit Replacement Limited Warranty and the 12-Year Parts Limited Warranty, online registration must be completed within 60 days of installation. Additional requirements for annual maintenance are required for the Unit Replacement Limited Warranty. Online registration and some of the additional requirements are not required in California or Quebec.

DAIKIN RESIDENTIAL FURNACES

DAIKIN

DC96VC SPECIFICATION

	DC96VC 0403BNA	DC96VC 0603BNA	DC96VC 0804CNA	DC96VC 1005CNA	DC96VC 1205DNA
Heating Data					
High Fire Input[1]	40,000	60,000	80,000	100,000	120,000
High Fire Output[1]	38,400	57,600	76,800	96,000	115,200
Low-Fire Steady-State Input[1]	28,000	42,000	56,000	70,000	84,000
Low-Fire Steady-State Output[1]	26,880	40,320	53,760	67,200	80,640
AFUE[2]	96	96	96	96	96
Temperature Rise Range (°F)	20 - 50	35 - 65	25 - 55	45 - 75	35 - 65
Vent Diameter[3]	2" - 3"	2" - 3"	2" - 3"	2" - 3"	2" - 3"
No. of Burners	2	3	4	5	6
Circulator Blower					
Available AC @ 0.5" ESP	1.5 - 3	1.5 - 3	1.5 - 4	2 - 5	2 - 5
Size (D x W)	10" x 8"	11" x 8"	11" x 10"	11" x 10"	11" x 11"
Horsepower @ 1075 RPM	½	½	¾	1	1
Speed	VS ECM	VS ECM	VS ECM	VS ECM	VS ECM
Electrical Data					
Min. Circuit Ampacity[4]	7.8	7.8	10.6	14.4	14.4
Max. Overcurrent Device (amps)[5]	15	15	15	20	20
Shipping Weight (lbs)	116	119	143	145	158

[1] Natural Gas BTU/h

[2] DOE AFUE based upon Isolated Combustion System (ICS)

[3] Installer must supply one or two PVC pipes: one for combustion air (optional) and one for the flue outlet (required). Vent pipe must be either 2" or 3" in diameter, depending upon furnace input, number of elbows, length of run and installation (1 or 2 pipes). The optional Combustion Air Pipe is dependent on installation/code requirements and must be 2" or 3"diameter PVC.

[4] Minimum Circuit Ampacity = (1.25 x Circulator Blower Amps) + ID Blower amps. Wire size should be determined in accordance with National Electrical Codes. Extensive wire runs will require larger wire sizes.

[5] Maximum Overcurrent Protection Device refers to maximum recommended fuse or circuit breaker size. May use fuses or HACR-type circuit breakers of the same size as noted.

NOTES

- All furnaces are manufactured for use on 115 VAC, 60 Hz, single-phase electrical supply.
- Gas Service Connection ½" FPT
- Important: Size fuses and wires properly and make electrical connections in accordance with the National Electrical Code and/or all existing local codes.
- For bottom return: Failure to unfold flanges may reduce airflow by up to 18%. This could result in performance and noise issues.
- For servicing or cleaning, a 24" front clearance is required. Unit connections (electrical, flue and drain) may necessitate greater clearances than the minimum clearances listed above. In all cases, accessibility clearance must take precedence over clearances from the enclosure where accessibility clearances are greater.

DAIKIN AIR HANDLERS

DAIKIN

ACNF Series

Ceiling-Mounted Air Handlers
1½ to 2½ Tons



Features

- Check flowrater for heat pump and cooling-only applications
- All-Aluminum tube/aluminum fin coil
- Direct-drive, resilient-mount, multi-speed motor
- Sequence-controlled and rust-resistant nickel chromium heating elements of 5, 6, 8 and 10 kW
- High-efficiency evaporator coil
- Quiet operation
- Models with EEM motors: ACNF25 & ACNF31
- Models with PSC motors: ACNF18, ACNF24, & ACNF30
- Available with and without heat
- AHRI Certified; ETL Listed
- Primary/secondary drain connection in a high-temperature plastic drain pan
- Suitable for free-return installation (non-ducted return air)
- Galvanized-steel construction
- Factory-installed pull-type disconnect
- Easy service access

* Complete warranty details available from your local dealer or at www.daikincomfort.com. To receive the 10-Year Parts Limited Warranty, online registration must be completed within 60 days of installation. Online registration is not required in California or Québec.

DAIKIN AIR HANDLERS

DAIKIN

ACNF18/ ACNF24 SERIES SPECIFICATION

	ACNF18 001	ACNF18 051	ACNF18 061	ACNF18 081	ACNF24 001	ACNF24 051	ACNF24 061	ACNF24 081
PERFORMANCE RATINGS								
Cooling (BTU/h)	18,000	18,000	18,000	18,000	24,000	24,000	24,000	24,000
Piston Size[2]	0.051	0.051	0.051	0.051	0.057	0.057	0.057	0.057
BLOWER								
Diameter	5.75	5.75	5.75	5.75	6.31	6.31	6.31	6.31
Width	6.75	6.75	6.75	6.75	8.25	8.25	8.25	8.25
Coil Drain Connect FPT	3/4"	3/4"	3/4"	3/4"	3/4"	3/4"	3/4"	3/4"
BLOWER MOTOR								
FLA	0.72	0.72	0.72	0.72	1.34	1.34	1.34	1.34
HP	1/8	1/8	1/8	1/8	1/4	1/4	1/4	1/4
REFRIGERANT LINE CONNECTION SIZE								
Liquid	⅜"	⅜"	⅜"	⅜"	⅜"	⅜"	⅜"	⅜"
Suction	¾"	¾"	¾"	¾"	¾"	¾"	¾"	¾"
ELECTRICAL DATA								
Voltage	208/230	208/230	208/230	208/230	208/230	208/230	208/230	208/230
Min Circuit Ampacity @ 230V	0.9	27	33.5	40.6	1.68	27.8	34.3	41.3
Min Circuit Ampacity @ 208V	0.9	23.5	29.2	35.3	1.68	24.3	29.9	36.1
Max. Overcurrent Device @ 230V	15	30	35	45	15	30	35	45
Max. Overcurrent Device @ 208V	15	25	30	40	15	25	30	40
Minimum Voltage VAC	197	197	197	197	197	197	197	197
Maximum Voltage VAC	253	253	253	253	253	253	253	253
ELECTRIC HEAT								
kW @ 230 Volts	0.0	4.8	6.0	7.3	0.0	4.8	6.0	7.3
BTU/h @ 230 Volts	0	16,400	20,500	24,900	0	16,400	20,500	24,900
SHIP WEIGHT (LBS)	59	59	59	59	69	69	69	69

[1] CFM @.3 static [2]Shipped with Coil

NOTES

- For a properly matched system and piston sizing information, refer to Amana piston kit chart of the corresponding Amana® outdoor unit.
- When the room thermostat calls for second stage heat, the first stage (heat pump) operation must be locked out. When matching the "AC" unit that has electric heat with a heat pump, order "HEAT PUMP SHUT OFF KIT HPSK-01." The ACXX-00 units do not require this kit.

DAIKIN AIR HANDLERS

DAIKIN

ACNF24/ ACNF30 SERIES SPECIFICATION

	ACNF24 101	ACNF25 0016	ACNF25 0516	ACNF25 0616	ACNF25 0816	ACNF25 1016	ACNF30 001	ACNF30 051
PERFORMANCE RATINGS								
Cooling (BTU/h)	24,000	24,000	24,000	24,000	24,000	24,000	30,000	30,000
Piston Size[2]	0.057	0.055	0.055	0.055	0.055	0.055	0.061	0.061
BLOWER								
Diameter	6.31	6.31	6.31	6.31	6.31	6.31	6.75	6.75
Width	8.25	8.25	8.25	8.25	8.25	8.25	8.25	8.25
Coil Drain Connect FPT	3/4"	3/4"	3/4"	3/4"	3/4"	3/4"	3/4"	3/4"
BLOWER MOTOR								
FLA	1.34	2	2	2	2	2	1.34	1.34
HP	1/4	1/4	1/4	1/4	1/4	1/4	1/4	1/4
REFRIGERANT LINE CONNECTION SIZE								
Liquid	⅜"	⅜"	⅜"	⅜"	⅜"	⅜"	⅜"	⅜"
Suction	¾"	¾"	¾"	¾"	¾"	¾"	¾"	¾"
ELECTRICAL DATA								
Voltage	208/230	208/230	208/230	208/230	208/230	208/230	208/230	208/230
Min Circuit Ampacity @ 230V	54.9	2.5	28.6	35.1	42.2	55.8	1.68	27.8
Min Circuit Ampacity @ 208V	47.8	2.5	26.1	32.0	38.4	50.7	1.68	24.3
Max. Overcurrent Device @ 230V	60	15	30	40	45	60	15	30
Max. Overcurrent Device @ 208V	50	15	30	35	40	60	15	25
Minimum Voltage VAC	197	197	197	197	197	197	197	197
Maximum Voltage VAC	253	253	253	253	253	253	253	253
ELECTRIC HEAT								
kW @ 230 Volts	9.8	0.0	4.8	6.0	7.3	9.8	0.0	4.8
BTU/h @ 230 Volts	33,500	0	16,400	20,500	24,900	33,500	0	16,400
SHIP WEIGHT (LBS)	69	69	69	69	69	69	79	79

[1] CFM @ .2 static

Note: When the room thermostat calls for second stage heat, the first stage (heat pump) operation must be locked out. When matching the "AC" unit that has electric heat with a heat pump, order "HEAT PUMP SHUT OFF KIT HPSK-01." The ACXX-00 units do not require this kit.

DAIKIN AIR HANDLERS

DAIKIN

ACNF30/ ACNF31 SERIES SPECIFICATION

	ACNF30 061	ACNF30 081	ACNF30 101	ACNF31 0016	ACNF31 0516	ACNF31 0616	ACNF31 0816	ACNF31 1016
PERFORMANCE RATINGS								
Cooling (BTU/h)	30,000	30,000	30,000	30,000	30,000	30,000	30,000	30,000
Piston Size[2]	0.061	0.061	0.061	0.059	0.059	0.059	0.059	0.059
BLOWER								
Diameter	6.75	6.75	6.75	6.75	6.75	6.75	6.75	6.75
Width	8.25	8.25	8.25	8.25	8.25	8.25	8.25	8.25
Coil Drain Connect FPT	3/4"	3/4"	3/4"	3/4"	3/4"	3/4"	3/4"	3/4"
BLOWER MOTOR								
FLA	1.34	1.34	1.34	2	2	2	2	2
HP	1/4	1/4	1/4	1/4	1/4	1/4	1/4	1/4
REFRIGERANT LINE CONNECTION SIZE								
Liquid	⅜"	⅜"	⅜"	⅜"	⅜"	⅜"	⅜"	⅜"
Suction	¾"	¾"	¾"	¾"	¾"	¾"	¾"	¾"
ELECTRICAL DATA								
Voltage	208/230	208/230	208/230	208/230	208/230	208/230	208/230	208/230
Min Circuit Ampacity @ 230V	34.3	41.3	54.9	2.5	28.6	35.1	42.2	55.8
Min Circuit Ampacity @ 208V	29.9	36.1	47.8	2.5	26.1	32.0	38.4	50.7
Max. Overcurrent Device @ 230V	35	45	60	15	30	40	45	60
Max. Overcurrent Device @ 208V	30	40	50	15	30	35	40	60
Minimum Voltage VAC	197	197	197	197	197	197	197	197
Maximum Voltage VAC	253	253	253	253	253	253	253	253
ELECTRIC HEAT								
kW @ 230 Volts	6.0	7.3	9.8	0.0	4.8	6.0	7.3	9.8
BTU/h @ 230 Volts	20,500	24,900	33,500	0	16,400	20,500	24,900	33,500
SHIP WEIGHT (LBS)	79	79	79	79	79	79	79	79

[1] CFM @ .2 static

Note: When the room thermostat calls for second stage heat, the first stage (heat pump) operation must be locked out. When matching the "AC" unit that has electric heat with a heat pump, order "HEAT PUMP SHUT OFF KIT HPSK-01." The ACXX-00 units do not require this kit.

DAIKIN AIR HANDLERS

DAIKIN

ARUF Series

Multi-Position
Multi-Speed Air Handler
with PSC Motor
2 to 5 Tons



Product Features

- Check flowrator for cooling and heat pump applications
- Direct drive, multi-speed PSC blower motor
- All-aluminum evaporator coil
- Coil mounting track for quick repositioning
- Cabinet air leakage less than 2.0% at 1.0 inch H_2O when tested in accordance with ASHRAE standard 193
- Cabinet air leakage less than 1.4% at 0.5 inch H_2O when tested in accordance with ASHRAE standard 193
- 3 kW – 25 kW electric heater kits
- Horizontal or vertical configuration capabilities
- AHRI certified; ETL listed
- Rigid SmartFrame™ cabinet
- 21" depth for easier attic access
- DecaBDE-free thermoplastic drain pan with secondary drain connections
- Screw-less sides and back helps to reduce condensation when installed in humid locations
- Foil-faced insulation covers the internal casing to reduce cabinet condensation
- Galvanized, leather grain-embossed finish
- Glue-less cabinet insulation retention
- Tool-less filter access

12 YEAR PARTS LIMITED WARRANTY

ALL ALUMINUM COIL

C ETL LISTED US Intertek

ISO 9001

* Complete warranty details available from your local dealer or at www.daikincomfort.com. To receive the 12-Year Parts Limited Warranty, online registration must be completed within 60 days of installation. Online registration is not required in California or Quebec.

DAIKIN AIR HANDLERS

DAIKIN

ARUF SERIES SPECIFICATION

	ARUF 25B14*	ARUF 29B14*	ARUF 31B14*	ARUF 37C14*	ARUF 43C14*	ARUF 49C14*	ARUF 37D14*	ARUF 43D14*	ARUF 47D14*	ARUF 49D14*	ARUF 61D14*
NOMINAL RATINGS											
Cooling (Btu/h)	24,000	25,000	30,000	36,000	42,000	48,000	36,000	42,000	43,000	48,000	60,000
Piston Size	0.051	0.057	0.065	0.072	0.076	0.080	0.072	0.076	0.076	0.080	0.080
BLOWER											
Diameter	9½"	9½"	9½"	10⅝"	10⅝"	10⅝"	10⅝"	10⅝"	10⅝"	10⅝"	$11^{15}/_{16}$"
Width	6"	6"	6"	8"	8"	10⅝"	10⅝"	10⅝"	10⅝"	10⅝"	10⅝"
COIL CONNECTIONS											
Liquid	⅜"	⅜"	⅜"	⅜"	⅜"	⅜"	⅜"	⅜"	⅜"	⅜"	⅜"
Suction	¾"	¾"	⅞"	⅞"	⅞"	⅞"	⅞"	⅞"	⅞"	⅞"	⅞"
Coil Drain Connect (FPT)	¾"	¾"	¾"	¾"	¾"	¾"	¾"	¾"	¾"	¾"	¾"
ELECTRICAL DATA											
Voltage	208/230	208/230	208/230	208/230	208/230	208/230	208/230	208/230	208/230	208/230	208/230
Min Circuit Ampacity	2.4/2.4	2.4/2.4	2.4/2.4	4/4	4/4	4/4	4/4	4/4	4/4	4/4	6/6
Max. Overcurrent Device (Amps)	15/15	15/15	15/15	15/15	15/15	15/15	15/15	15/15	15/15	15/15	15/15
Minimum VAC	197	197	197	197	197	197	197	197	197	197	197
Maximum VAC	253	253	253	253	253	253	253	253	253	253	253
Blower Motor											
Full Load Amps (FLA)	1.9	1.9	1.9	3.0	3.0	3.1	3.0	3.5	3.5	3.5	4.6
Horsepower (HP)	⅓	⅓	⅓	⅓	⅓	½	⅓	½	½	½	¾
SHIP WEIGHT (LBS.)	100	100	110	130	130	135	140	145	150	145	155

Note: For a properly matched system and piston sizing information, refer to Amana piston kit chart of the corresponding Amana® outdoor unit.
Minimum Circuit Ampacity (MCA) and Maximum Overcurrent Protection (MOP) for blower without supplemental heat installed.
Refer to unit nameplate and/or Heat Kit Data for specification with approved accessory heaters installed.

DAIKIN AIR HANDLERS

DAIKIN

ASPT Series



Multi-Position, Multi-Speed, ECM-Based Air Handler with Internal TXV 1½ to 5 Tons

Product Features

- Internal factory-installed thermal expansion valves for cooling and heat pump applications
- Direct drive, multi-speed ECM blower motor
- All-aluminum evaporator coil
- Coil mounting track for quick repositioning
- Optimized for use with R-410A refrigerant
- Cabinet air leakage less than 2.0% at 1.0 inch H_2O when tested in accordance with ASHRAE standard 193
- Cabinet air leakage less than 1.4% at 0.5 inch H_2O when tested in accordance with ASHRAE standard 193
- 3 kW – 25 kW electric heater kits
- AHRI certified; ETL listed
- Rigid SmartFrame™ cabinet
- Horizontal or vertical configuration capabilities
- 21” depth for easier attic access
- DecaBDE-free thermoplastic drain pan with secondary drain connections
- Screw-less sides and back helps to reduce condensation when installed in humid locations
- Foil-faced insulation covers the internal casing to reduce cabinet condensation
- Galvanized, leather grain-embossed finish
- Glue-less cabinet insulation retention
- Tool-less filter access

12 YEAR PARTS LIMITED WARRANTY

ALL ALUMINUM COIL

Intertek

* Complete warranty details available from your local dealer or at www.daikincomfort.com. To receive the 12-Year Parts Limited Warranty, online registration must be completed within 60 days of installation. Additional requirements for annual maintenance are required for the Unit Replacement Limited Warranty. Online registration and some of the additional requirements are not required in California or Quebe

DAIKIN AIR HANDLERS

DAIKIN

ASPT SERIES SPECIFICATION

	ASPT 25B14*	ASPT 29B14*	ASPT 33C14*	ASPT 35B14*	ASPT 37B14*	ASPT 37C14*	ASPT 39C14*	ASPT 47C14*	ASPT 47D14*	ASPT 49C14*	ASPT 49D14*	ASPT 59C14*	ASPT 61D14*
Nominal Ratings													
Cooling (Btu/h)	24,000	24,000	24,000	28,000	30,000	36,000	36,000	42,000	42,000	48,000	48,000	60,000	60,000
Blower													
Diameter	9½"	9½"	10⅝"	9½"	9½"	10⅝"	10⅝"	10⅝"	10⅝"	10⅝"	11 15/16"	10⅝"	11 15/16"
Width	6"	6"	8"	6"	6"	8"	8"	10⅝"	10⅝"	8"	10⅝"	10⅝"	10⅝"
Coil Connections													
Liquid	⅜"	⅜"	⅜"	⅜"	⅜"	⅜"	⅜"	⅜"	⅜"	⅜"	⅜"	⅜"	⅜"
Suction	¾"	⅞"	⅞"	¾"	⅞"	⅞"	⅞"	⅞"	⅞"	⅞"	⅞"	⅞"	⅞"
Coil Drain Connect (FPT)	¾"	¾"	¾"	¾"	¾"	¾"	¾	¾"	¾"	¾"	¾"	¾"	¾"
Electrical Data													
Voltage	208/230	208/230	208/230	208/230	208/230	208/230	208/230	208/230	208/230	208/230	208/230	208/230	208/230
Minimum Circuit Ampacity	5.8 / 5.8	5.8 / 5.8	4.9 / 4.9	5.6 / 5.6	5.6 / 5.6	5.6 / 5.6	4.9 / 4.9	4.9 / 4.9	5.6 / 5.6	7.1 / 7.1	8.6 / 8.6	7.9 / 7.9	8.6 / 8.6
Max. Overcurrent Device (Amps)	15 / 15	15 / 15	15 / 15	15/15	15 / 15	15 / 15	15 / 15	15 / 15	15 / 15	15 / 15	15 / 15	15/15	15 / 15
Minimum VAC	197	197	197	197	197	197	197	197	197	197	197	197	197
Maximum VAC	253	253	253	253	253	253	253	253	253	253	253	253	253
Blower Motor													
Full Load Amps (FLA)	4.6	4.6	3.9	4.5	4.5	4.5	3.9	3.9	4.5	5.7	6.9	6.3	6.9
Horsepower (HP)	¾	¾	¾	¾	¾	¾	¾	¾	¾	¾	1	1	1
Ship Weight (Lbs.)	116	129	118	129	129	144	118	144	155	125	167	144	167

*Airflow rate @.3 static

Note: Assumes dry coil; SCFM correction for wet coil = 4% (208V / 240V)

DAIKIN AIR HANDLERS

DAIKIN

AWUF, AWUT Series

Wall-Mount Air Handler
1 to 3 Tons



Product Features

- AWUF Models: Equipped with a Check Flowrator
  AWUT Models: Equipped wit a fully adjustable TXV
- Direct-drive, multi-speed motors allows air volume variation for heating/cooling
  - Multi-speed ECM: AWUF19, 25, 31, 32, 37, AWUT31, 32, 37
  - Multi-speed PSC motor: AWUF18, 24, 30, 36
- Sequence-controlled, rust-resistant nickel chromium heating elements of 3, 5, 8, and 10 kW
- Aluminum tubing coils on all models
- Cabinet air leakage less than 2.0% at 1.0 inch H_2O when tested in accordance with ASHRAE standard 193
- Cabinet air leakage less than 1.4% at 0.5 inch H_2O when tested in accordance with ASHRAE standard 193
- Factory-installed pull-type disconnect
- Thermoplastic drain pan with bottom primary and secondary drain connections
- Built-in filter rack (filter included)
- Large chassis (2½- and 3-ton units) – front return only
- Small chassis (1½- and 2-ton units) – front or bottom return
- Wall-hanging bracket provided
- AHRI Certified; ETL Listed

* Complete warranty details available from your local dealer or at www.daikincomfort.com. To receive the 12-Year Parts Limited Warranty, online registration must be completed within 60 days of installation. Online registration is not required in California or Quebec.

DAIKIN AIR HANDLERS

DAIKIN

AWUF SERIES SPECIFICATION

	AWUF 180316B	AWUF 180516B	AWUF 180816B	AWUF 190316B	AWUF 190516B	AWUF 190816B	AWUF 240316B	AWUF 240516B	AWUF 240816B	AWUF 241016B
NOMINAL RATINGS										
Cooling (BTU/h)	18,000	18,000	12,000 or 18000	12,000 or 18000	12,000 (not recommended) or 18000	18,000	24,000	24,000	24,000	24,000
Electric Heat (kW)	3	5	8	3	5	8	3	5	8	10
BLOWER										
Diameter (in.)	9	9	9	10	10	10	10	10	10	10
Width (in.)	6	6	6	6	6	6	6	6	6	6
COIL CONNECTIONS										
Liquid	⅜"	⅜"	⅜"	⅜"	⅜"	⅜"	⅜"	⅜"	⅜"	⅜"
Suction	⅝"	⅝"	⅝"	⅝"	⅝"	⅝"	⅝"	⅝"	⅝"	⅝"
Coil Drain Connection (FPT)	¾"	¾"	¾"	¾"	¾"	¾"	¾"	¾"	¾"	¾"
ELECTRICAL DATA										
Voltage	230/208	230/208	230/208	230/208	230/208	230/208	230/208	230/208	230/208	230/208
Minimum Circuit Ampacity (230V)	17	26.6	39.6	18.9	28	41.3	17	26.6	39.6	52.7
Minimum Circuit Ampacity (208V)	15.2	23	35	17	24.9	36	15.2	23	35	46
Max. Overcurrent Device (240V)	20	30	40	20	30	45	20	30	40	60
Max. Overcurrent Device (208V)	20	25	35	20	25	40	20	25	35	50
Minimum VAC	197	197	197	197	197	197	197	197	197	197
Maximum VAC	253	253	253	253	253	253	253	253	253	253
BLOWER MOTOR										
Full Load Amps (FLA)	1.3	1.3	1.3	2.6	2.6	2.6	1.3	1.3	1.3	1.3
Horsepower (HP)	1/5	1/5	1/5	1/3	1/3	1/3	1/5	1/5	1/5	1/5
SHIP WEIGHT (LBS)	84	84	84	84	84	84	84	84	84	84

DAIKIN AIR HANDLERS

DAIKIN

AWUF SERIES SPECIFICATION

	AWUF 250316A	AWUF 250516A	AWUF 250816A	AWUF 251016A	AWUF 300516B	AWUF 300816B	AWUF 301016B	AWUF 310516A*	AWUF 310816A*
NOMINAL RATINGS									
Cooling (BTU/h)	24,000	24,000	24,000	24,000	30,000	30,000	30,000	30,000	30,000
Electric Heat (kW)	3	5	8	10	5	8	10	5	8
BLOWER									
Diameter (in.)	10	10	10	10	9	9	9	10	10
Width (in.)	6	6	6	6	8	8	8	8	8
COIL CONNECTIONS									
Liquid	⅜"	⅜"	⅜"	⅜"	⅜"	⅜"	⅜"	⅜"	⅜"
Suction	⅝"	⅝"	⅝"	⅝"	¾"	¾"	¾"	¾"	¾"
Coil Drain Connection (FPT)	¾"	¾"	¾"	¾"	¾"	¾"	¾"	¾"	¾"
ELECTRICAL DATA									
Voltage	230/208	230/208	230/208	230/208	230/208	230/208	230/208	230/208	230/208
Minimum Circuit Ampacity (230V)	18.9	28	41.3	54	27.0	40.0	53.0	29.9	43
Minimum Circuit Ampacity (208V)	17	24.9	36	47.5	23.6	34.9	46.2	27	37.8
Max. Overcurrent Device (240V)	20	30	45	60	30	40	60	30	45
Max. Overcurrent Device (208V)	20	25	40	50	25	35	50	30	40
Minimum VAC	197	197	197	197	197	197	197	197	197
Maximum VAC	253	253	253	253	253	253	253	253	253
BLOWER MOTOR									
Full Load Amps (FLA)	2.6	2.6	2.6	2.6	1.58	1.58	1.58	3.9	3.9
Horsepower (HP)	1/3	1/3	1/3	1/3	1/3	1/3	1/3	1/2	1/2
SHIP WEIGHT (LBS)	84	84	84	84	109	109	109	109	109

DAIKIN AIR HANDLERS

DAIKIN

AWUF SERIES SPECIFICATION

	AWUF 321016A*	AWUF 360516B	AWUF 360816B	AWUF 361016B	AWUF 370516B	AWUF 370816B	AWUF 371016B
NOMINAL RATINGS							
Cooling (BTU/h)	30,000	36,000	36,000	36,000	36,000	36,000	36,000
Electric Heat (kW)	10	5	8	10	5	8	10
BLOWER							
Diameter (in.)	10	9	9	9	10	10	10
Width (in.)	8	8	8	8	8	8	8
COIL CONNECTIONS							
Liquid	⅜"	⅜"	⅜"	⅜"	⅜"	⅜"	⅜"
Suction	¾"	¾"	¾"	¾"	¾"	¾"	¾"
Coil Drain Connection (FPT)	¾"	¾"	¾"	¾"	¾"	¾"	¾"
ELECTRICAL DATA							
Voltage	230/208	230/208	230/208	230/208	230/208	230/208	230/208
Minimum Circuit Ampacity (230V)	56	27.0	40.0	53.0	29.9	43	56
Minimum Circuit Ampacity (208V)	49.1	23.6	34.9	46.2	27	37.8	49.1
Max. Overcurrent Device (240V)	60	30	40	60	30	45	60
Max. Overcurrent Device (208V)	50	25	35	50	30	40	50
Minimum VAC	197	197	197	197	197	197	197
Maximum VAC	253	253	253	253	253	253	253
BLOWER MOTOR							
Full Load Amps (FLA)	3.9	1.58	1.58	1.58	3.9	3.9	3.9
Horsepower (HP)	1/2	1/3	1/3	1/3	1/2	1/2	1/2
SHIP WEIGHT (LBS)	109	96	96	96	96	96	96

DAIKIN AIR HANDLERS

DAIKIN

AWUT SERIES SPECIFICATION

	AWUT 310514A*	AWUT 310814A*	AWUT 321014A*	AWUT 370516A	AWUT 370816A	AWUT 371016A
NOMINAL RATINGS						
Cooling (BTU/h)	30,000	30,000	30,000	36,000	36,000	36,000
Electric Heat (kW)	5	8	10	5	8	10
BLOWER						
Diameter (in.)	10	10	10	10	10	10
Width (in.)	8	8	8	8	8	8
COIL CONNECTIONS						
Liquid	⅜"	⅜"	⅜"	⅜"	⅜"	⅜"
Suction	¾"	¾"	¾"	¾"	¾"	¾"
Coil Drain Connection (FPT)	¾"	¾"	¾"	¾"	¾"	¾"
ELECTRICAL DATA						
Voltage	230/208	230/208	230/208	230/208	230/208	230/208
Minimum Circuit Ampacity (230V)	30.1	43	56	29.9	43	56
Minimum Circuit Ampacity (208V)	27	38.1	49.4	27	37.9	49.1
Max. Overcurrent Device (240V)	35	45	60	30	45	60
Max. Overcurrent Device (208V)	30	40	50	30	40	50
Minimum VAC	197	197	197	197	197	197
Maximum VAC	253	253	253	253	253	253
BLOWER MOTOR						
Full Load Amps (FLA)	4.1	4.1	4.1	3.9	3.9	3.9
Horsepower (HP)	1/2	1/2	1/2	1/2	1/2	1/2
SHIP WEIGHT (LBS)	109	109	109	96	96	96

DAIKIN AIR HANDLERS

DAIKIN

DVPEC

Multi-Position, Variable-Speed Air Handler



- *Comfortnet™ Compatible*
- *ECM-based*
- *Internal EEV, Inverter-tuned*
- *2 to 5 Tons*

■ *Product Features*

- Electronic Expansion Valve (EEV) for cooling and heat pump applications.
- Variable-speed ECM blower motor
- ComfortNet™ Communicating System compatible
- Provides constant CFM over a wide range of static pressure conditions independent of duct system
- CFM indicator
- Thermostat provides adjustable low CFM for efficient fan-only operation
- All-aluminum evaporator coil
- Fault recall of six most recent faults
- Improved humidity and comfort control
- AHRI certified; ETL listed
- Cabinet air leakage less than 2.0% at 1.0 inch H_2O when tested in accordance with ASHRAE standard 193
- Cabinet air leakage less than 1.4% at 0.5 inch H_2O when tested in accordance with ASHRAE standard 193
- 3 kW – 25 kW electric heater kits
- Horizontal or vertical configuration capabilities
- 21" depth for easier attic access
- DecaBDE-free thermoplastic drain pan with secondary drain connections
- Screw-less sides and back helps to reduce condensation when installed in humid locations
- Foil-faced insulation covers the internal casing to reduce cabinet condensation
- Galvanized, leather grain-embossed finish
- Glue-less cabinet insulation retention
- Tool-less filter access

12 YEAR PARTS LIMITED WARRANTY* ComfortNet ALL ALUMINUM COIL C ETL LISTED US Intertek

* Complete warranty details available from your local dealer or at www.daikincomfort.com. To receive the 12-Year Parts Limited Warranty, online registration must be completed within 60 days of installation. Additional requirements for annual maintenance are required for the Unit Replacement Limited Warranty. Online registration and some of the additional requirements are not required in California or Quebec.

DAIKIN AIR HANDLERS

DAIKIN

DVPEC SERIES SPECIFICATION

	DV25PEC B14A*	DV37PEC C14A*	DV59PEC D14A*	DV61PEC D14A*
NOMINAL RATINGS				
Cooling (BTU/h)	24,000	36,000	48,000	60,000
BLOWER				
Diameter	10⅝"	10⅝"	11⅝"	11⅝"
Width	6”	10⅝"	10⅝"	10⅝"
COIL CONNECTIONS				
Liquid	⅜"	⅜"	⅜"	⅜"
Suction	¾”	⅞"	⅞"	⅞"
Coil Drain Connection (FPT)	¾"	¾”	¾”	¾”
ELECTRICAL DATA				
Voltage	208/240	208/240	208/240	208/240
Min Circuit Ampacity	4.9/4.9	6.5/6.5	8.6/8.6	8.6/8.6
Max. Overcurrent Device (Amps)	15/15	15/15	15/15	15/15
Minimum VAC	197	197	197	197
Maximum VAC	253	253	253	253
BLOWER MOTOR				
Full Load Amps (FLA)	3.9	5.2	6.9	6.9
Horsepower (HP)	½	¾	1	1
SHIP WEIGHT (LBS.)	115	140	150	167

NOTE: Minimum Circuit Ampacity (MCA) and Maximum Overcurrent Protection (MOP) for blower without supplemental heat installed. Refer to unit nameplate and/or Heat Kit Data for specification with approved accessory heaters installed.

DAIKIN AIR HANDLERS

DAIKIN

DVPTC

Multi-Position, Variable-Speed, ECM-Based Air Handler with Internal TXV ComfortNet™ Compatible 2 to 5 Tons



■ *Product Features*

- Internal factory-installed thermal expansion valves for cooling and heat pump applications
- Variable-speed ECM blower motor
- ComfortNet™ Communicating System compatible
- Auto configuration of the airflow and tonnage in communicating mode
- All-aluminum evaporator coil
- Provides constant CFM over a wide range of static pressure conditions independent of duct system
- CFM indicator
- Fault recall of six most recent faults
- Provides adjustable low CFM for efficient fan-only operation
- Improved humidity and comfort control
- Built-in compatibility with multi-stage heat pump and cooling applications
- AHRI certified; ETL listed
- Cabinet air leakage less than 2.0% at 1.0 inch H_2O when tested in accordance with ASHRAE standard 193
- Cabinet air leakage less than 1.4% at 0.5 inch H_2O when tested in accordance with ASHRAE standard 193
- 3 kW – 25 kW electric heater kits
- Horizontal or vertical configuration capabilities
- 21” depth for easier attic access
- DecaBDE-free thermoplastic drain pan with secondary drain connections
- Screw-less sides and back helps to reduce condensation when installed in humid locations
- Foil-faced insulation covers the internal casing to reduce cabinet condensation
- Galvanized, leather grain-embossed finish
- Glue-less cabinet insulation retention
- Tool-less filter access

12 YEAR PARTS LIMITED WARRANTY · ComfortNet · ALL ALUMINUM COIL · ETL C LISTED US Intertek

* Complete warranty details available from your local dealer or at www.daikincomfort.com. To receive the 12-Year Parts Limited Warranty, online registration must be completed within 60 days of installation. Additional requirements for annual maintenance are required for the Unit Replacement Limited Warranty. Online registration and some of the additional requirements are not required in California or Quebec.

DAIKIN AIR HANDLERS

DAIKIN

DVPTC SERIES SPECIFICATION

	DV24 PTCB14**	DV25 PTCB14A*	DV29 PTCB14A*	DV30 PTCC14**	DV31 PTCC14A*	DV33 PTCC14*	DV35 PTCB14	DV36 PTCC14**	DV37 PTCB14A*	DV37 PTCC14A*	DV37 PTCD14A*	DV39 PTCC14*
NOMINAL RATINGS												
Cooling (BTU/h)	24,000	24,000	30,000	30,000	30,000	24,000	28,000	36,000	36,000	36,000	36,000	36,000
CFM (High range)	1100/600	1085/650	1085/610	1200/600	1315/870	1090/685	1020/685	1600/700	1085/610	1315/870	1375/865	1315/965
BLOWER												
Diameter	9½"	9½"	9½"	10⅝"	10⅝"	10⅝"	9½"	10⅝"	9½"	10⅝"	10⅝"	10⅝"
Width	6"	6"	6"	8"	8"	8"	6"	10⅝"	6"	8"	10⅝"	8"
Coil Drain Connection FPT	¾"	¾"	¾"	¾"	¾"	¾"	¾"	¾"	¾"	¾"	¾"	¾"
SERVICE VALVE												
Liquid	⅜"	⅜"	⅜"	⅜"	⅜"	⅜"	⅜"	⅜"	⅜"	⅜"	⅜"	⅜"
Suction	¾"	¾"	⅞"	⅞"	⅞"	⅞"	¾"	⅞"	⅞"	⅞"	⅞"	⅞"
ELECTRICAL DATA												
Voltage	208/240	208/240	208/240	208/240	208/240	208 / 240	208/240	208/240	208/240	208/240	208/240	208 / 240
Electric Heat Capacity (kW)	3, 5, 6, 8, 10	3, 5, 6, 8, 10, 15	3, 5, 6, 8, 10, 15	3, 5, 6, 8, 10	5, 6, 8, 10, 15, 19	3, 5, 6, 8, 10, 15	3, 5, 6, 8, 10,15	5, 6, 8, 10, 15, 19, 20F	3, 5, 6, 8, 10, 15	5, 6, 8, 10, 15, 19	5, 6, 8, 10, 15, 20	5, 6, 8, 10, 15, 19
Min Circuit Ampacity	4.9/4.9	4.9/4.9	6.5/6.5	4.9/4.9	6.5/6.5	4.9/4.9	4.9/4.9	6.5/6.5	6.5/6.5	6.5/6.5	6.5/6.5	6.5/6.5
Max. Overcurrent Device (amps)	15/15	15/15	15/15	15/15	15/15	15/15	15/15	15/15	15/15	15/15	15/15	15/15
Minimum VAC	197	197	197	197	197	197	197	197	197	197	197	197
Maximum VAC	253	253	253	253	253	253	253	253	253	253	253	253
BLOWER MOTOR												
FLA	3.9	3.9	5.2	3.9	5.2	3.9	3.9	5.2	5.2	5.2	5.2	5.2
HP	½	½	¾	½	¾	½	½	¾	¾	¾	¾	¾
SHIP WEIGHT (LBS)	100	116	129	118	144	118	116	118	129	144	155	118

Note: Minimum Circuit Ampacity (MCA) and Maximum Overcurrent Protection (MOP) for blower without supplemental heat installed.
Refer to unit nameplate and/or Heat Kit Data for specification with approved accessory heaters installed

	DV42 PTCD14**	DV48 PTCC14**	DV48 PTCD14**	DV49 PTCC14*	DV49 PTCD14A*	DV59 PTCC14A*	DV59 PTCD14A*	DV60 PTCD14**	DV61 PTCD14A*
NOMINAL RATINGS									
Cooling (BTU/h)	42,000	42,000	48,000	48,000	42,000	48,000	48,000	60,000	60,000
CFM (High range)	1700/800	1660/700	1800/1350	1420/1040	1530/1195	1595/875	1990/1445	2000/1600	2025/1630
BLOWER									
Diameter	10⅝"	10⅝"	10⅝"	10⅝"	10⅝"	10⅝"	11 15/16"	11⅝"	11 15/16"
Width	10⅝"	10⅝"	10⅝"	8"	10⅝"	8"	10⅝"	10⅝"	10⅝"
Coil Drain Connection FPT	¾"	¾"	¾"	¾"	¾"	¾"	¾"	¾"	¾"
SERVICE VALVE									
Liquid	⅜"	⅜"	⅜"	⅜"	⅜"	⅜"	⅜"	⅜"	⅜"
Suction	⅞"	⅞"	⅞"	⅞"	⅞"	⅞"	⅞"	⅞"	⅞"
ELECTRICAL DATA									
Voltage	208/240	208/240	208/240	208 / 240	208/240	208/240	208/240	208/240	208/240
Electric Heat Capacity (kW)	5, 6, 8, 10, 15, 20	5, 6, 8, 10, 15, 19, 20F	5, 6, 8, 10, 15, 20, 25	5, 6, 8, 10, 15, 19	5, 6, 8, 10, 15	5,6,8,10, 15,19	5, 6, 8, 10, 15, 20	5, 6, 8, 10, 15, 20, 25	5, 6, 8, 10, 15, 20,25
Min Circuit Ampacity	6.5/6.5	6.5/6.5	6.5/6.5	6.5/6.5	6.5/6.5	8.6/8.6	8.6/8.6	8.6/8.6	8.6/8.6
Max. Overcurrent Device (amps)	15/15	15/15	15/15	15 / 15	15/15	15/15	15/15	15/15	15/15
Minimum VAC	197	197	197	197	197	197	197	197	197
Maximum VAC	253	253	253	253	253	253	253	253	253
BLOWER MOTOR									
FLA	5.2	5.2	5.2	5.2	5.2	6.9	6.9	6.9	6.9
HP	¾	¾	¾	¾	¾	1	1	1	1
SHIP WEIGHT (LBS)	155	125	167	125	167	144	155	167	167

Note: Minimum Circuit Ampacity (MCA) and Maximum Overcurrent Protection (MOP) for blower without supplemental heat installed.
Refer to unit nameplate and/or Heat Kit Data for specification with approved accessory heaters installed

DAIKIN

DVFEC AIR HANDLERS



MULTI-POSITION, VARIABLE-SPEED, ECM-BASED AIR HANDLER WITH INTERNAL EEV COMMUNICATING FOR DAIKIN FIT MATCHUPS 1½ TO 5 TONS

Contents

Nomenclature 2
Product Specifications 3
Dimensions 4
Air Flow 4
Heat Kit Data 5
Wiring Diagram 6
Accessories 7

Product Features

- Electronic Expansion Valve (EEV) for cooling and heat pump applications.
- 7mm evaporator coil tube size
- Variable-speed ECM blower motor
- Compatible with Daikin *One*+ smart thermostat and other Daikin communicating equipment
- Provides constant CFM over a wide range of static pressure conditions independent of duct system
- CFM indicator
- Thermostat provides adjustable low CFM for efficient fan-only operation
- All-aluminum evaporator coil
- Fault recall of six most recent faults
- Improved humidity and comfort control
- AHRI certified; ETL listed
- Cabinet air leakage less than 2.0% at 1.0 inch H_2O when tested in accordance with ASHRAE standard 193
- Cabinet air leakage less than 1.4% at 0.5 inch H_2O when tested in accordance with ASHRAE standard 193
- 3 kW – 25 kW electric heater kits
- Horizontal or vertical configuration capabilities
- 21" depth for easier attic access
- DecaBDE-free thermoplastic drain pan with secondary drain connections
- Screw-less sides and back helps to reduce condensation when installed in humid locations
- Foil-faced insulation covers the internal casing to reduce cabinet condensation
- Galvanized, leather grain-embossed finish
- Glue-less cabinet insulation retention
- Tool-less filter access

12 YEAR PARTS LIMITED WARRANTY

ALL ALUMINUM COIL

Intertek

* Complete warranty details available from your local dealer or at www.daikincomfort.com. To receive the 12-Year Parts Limited Warranty, online registration must be completed within 60 days of installation. Additional requirements for annual maintenance are required for the Unit Replacement Limited Warranty. Online registration and some of the additional requirements are not required in California or Quebec.

DAIKIN

DVFEC AIR HANDLERS

Model	DV24FEC B14A*	DV36FEC C14A*	DV42FEC C14A*	DV48FEC D14A*	DV60FEC D14A*	DV35FEC C14A*	DV47FEC D14A*	DV59FEC D14A*
Nominal Tons	**2.0 Ton**	**3.0 Ton**	**3.5 Ton**	**4.0 Ton**	**5.0 Ton**	**2.0-2.5Ton**	**3.0Ton**	**4.0Ton**
Blower								
Diameter	9½"	10 5/8"	10 5/8"	12"	12"	10⅝"	12"	12"
Width	6"	10 5/8"	10 5/8"	10 5/8"	10 5/8"	10⅝"	10⅝"	10⅝"
Tubing Connection								
Liquid - Refrigerant	⅜"	⅜"	⅜"	⅜"	⅜"	⅜"	⅜"	⅜"
Suction - Refrigerant	¾"	⅞"	⅞"	⅞"	⅞"	⅞"	⅞"	⅞"
Coil Drain Connection (NPT)	¾"	¾"	¾"	¾"	¾"	¾"	¾"	¾"
Electrical Data								
Voltage - Phase	208/230-1	208/230-1	208/230-1	208/230-1	208/230-1	208/230-1	208/230-1	208/230-1
Min Circuit Ampacity	4.9/4.9	6.5/6.5	6.5/6.5	6.5/6.5	6.5/6.5	6.5/6.5	6.5/6.5	6.5/6.5
Max. Overcurrent Device (amps)	15/15	15/15	15/15	15/15	15/15	15/15	15/15	15/15
Minimum VAC	197	197	197	197	197	197	197	197
Maximum VAC	253	253	253	253	253	253	253	253
Blower Motor								
FLA	3.9	5.2	5.2	5.2	5.2	5.2	5.2	5.2
HP	½	¾	¾	¾	¾	¾	¾	¾
Ship Weight (Lbs.)	115	140	140	150	167	140	150	167

DAIKIN AIR HANDLERS

DAIKIN

MBVC

Multi-Position, Variable-Speed ECM-Based, Modular Blower ComfortNet™ Compatible



Product Features

- Variable-speed ECM blower motor
- ComfortNet™ Communicating System compatible
- Advanced configuration of the airflow and tonnage in communicating mode
- Provides constant CFM over a wide range of static pressure conditions independent of duct system
- CFM indicator
- Fault recall of six most recent faults
- Provides adjustable low CFM for efficient fan-only operation
- Improved humidity and comfort control
- Built-in compatibility with multi-stage heat pump and cooling applications
- 3 kW – 21 kW electric heat kits
- Blower section usable as electric heater
- Horizontal or vertical configuration capabilities
- 21" depth for easier attic access
- Foil-faced insulation covers the internal casing to reduce cabinet condensation
- Galvanized, leather grain-embossed finish
- Cabinet air leakage less than 2% at 1.0 inch H_20 when tested in accordance with ASHRE standard 193
- Cabinet air leakage less than 1.4% at 0.5 inch H_20 when tested in accordance with ASHRE standard 193
- AHRI certified; ETL listed

Model	MBVC1200AA-1	MBVC1600AA-1	MBVC2000AA-1
Blower			
Diameter	10"	10"	11"
Width	8"	8"	10"
Electrical Data			
Voltage	208 / 230	208 / 230	208 / 230
Min Circuit Ampacity	4.9	6.5	6.5
Max. Overcurrent Device (Amps)	15	15	15
Blower Motor			
Horsepower (HP)	½	¾	¾
Ship Weight (Lbs.)	67	80	86

- Minimum Circuit Ampacity (MCA) and Maximum Overcurrent Protection (MOP) for blower without supplemental heat installed. Refer to unit nameplate for these specifications with approved accessory heaters installed.

12 YEAR PARTS LIMITED WARRANTY

ALL ALUMINUM COIL

Intertek

* Complete warranty details available from your local dealer or at www.daikincomfort.com. To receive the 10-Year Parts Limited Warranty, online registration must be completed within 60 days of installation. Online registration is not required in California or Quebec.

INDOOR COILS

DAIKIN



CAPEA / CAPE
Cased with EEV



CAUF
Uncased



CAPF
Cased



CAPFA
Cased

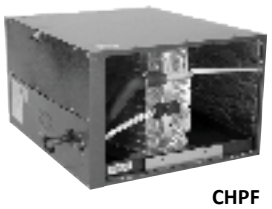

CHPF
Horizontal "A"



CHPE
Horizontal "A" with EEV



CSCF
Horizontal Slab



CAPT
Cased with Internal TXV

CAUF, CAPF, CAPT, CHPF, CAPEA, CAPE, CHPE AND CSCF

CASED, PAINTED UPFLOW/DOWNFLOW, UNCASED UPFLOW/DOWNFLOW, HORIZONTAL "A", AND HORIZONTAL SLAB

Standard Features

- All-Aluminum evaporator coil
- Optimized for use with R-410A refrigerant
- Some models suitable for use with R-410A or R-22 refrigerant
- Electronic expansion valve (EEV) models feature
  - Compatible with Daikin *One* ecosystem communicating equipment
  - Cooling and heat pump applications
  - Fault recall of six most recent faults
- CAPT models feature factory-installed thermal expansion valves for cooling and heat pump applications
- Check flowrator for cooling and heat pump applications
- CAPE, CAPEA and CHPE models feature factory-installed electronic expansion valve for precise refrigerant control
- Vertical and horizontal models available
- 21" depth for easier attic access
- CAPFA/CAPEA models include a single front access panel
- Foil-faced insulation covers the internal casing to reduce cabinet condensation
- Galvanized, leather grain-embossed finish
- Rust resistant, thermoplastic drain pans featuring a low water-retention design
- DecaBDE-free thermoplastic drain pan with secondary drain connections
- UV-resistant drain pan
- AHRI certified; ETL listed

ALL ALUMINUM COIL

Note: Do not use these coils on oil furnaces or any applications where the temperature on the drain pan may exceed 300° F. If these coils are applied with an oil furnace or another application where high temperatures threaten or jeopardize the durability of the drain pan, you must replace the factory-installed drain pan with a high-temperature drain pan. High-temperature drain pan kits are available as field-installed accessories.

12 YEAR PARTS LIMITED WARRANTY

Intertek

* Complete warranty details available from your local dealer or at www.daikincomfort.com. To receive the 12-Year Parts Limited Warranty, online registration must be completed within 60 days of installation. Online registration is not required in California or Québec.

DAIKIN FIT

DAIKIN

DESIGNED TO FIT COMFORT, SPACE-SAVING, AND EFFICIENCY REQUIREMENTS WITH EASE.

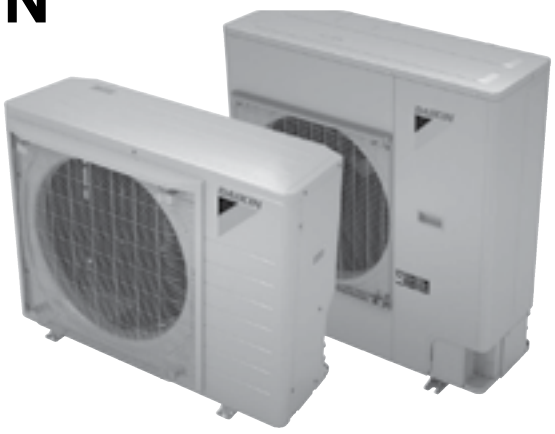

The Daikin *Fit* system is a side discharge, smart HVAC system that won't compromise on comfort and connects to ducted solutions traditional to the unitary market. In a market saturated with expensive high-tiered inverters, the system provides a premium mid-efficiency inverter at an affordable rate. The low profile of the outdoor unit offers solutions when a traditional cube style cannot.

Features and Benefits

- Up to **18 SEER**
- **Compact –** The trunk style outdoor unit is perfect when installation space is limited
- **Inverter (variable-speed) Compressor –** Ideal indoor comfort and efficiency
- **Low dBa** – Reclaim outdoor space
- **Quiet-mode** – Provides enhanced acoustical comfort
- **Blue Fin Coat** – Long condenser coil life and reliability
- **Swing Compressor** – Quiet and dependable
- **Side panel access** – Ease of service
- **Lightweight** – Easier to handle and install (compared to traditional cube style systems)

THE DAIKIN FIT IS BACKED BY A 12-YEAR PARTS LIMITED WARRANTY* AND A 12-YEAR UNIT REPLACEMENT LIMITED WARRANTY*

* Complete warranty details available from your local dealer/contractor or at www.daikincomfort.com. To receive the 12-Year Unit Replacement Limited Warranty and 12-Year Parts Limited Warranty, online registration must be completed within 60 days of installation. Additional requirements for annual maintenance are required for the Unit Replacement Limited Warranty. Online registration and some of the additional requirements are not required in California or Quebec.

DAIKIN FIT - **OUTDOOR UNIT**							
Model Name	DX17VSS 181AA	DX17VSS 241AA	DX17VSS 301AA	DX17VSS 361AA	DX17VSS 421AA	DX17VSS 481AA	DX17VSS 601AA
Cooling Capacity							
Max. Cooling (BTU/h)	17,100	22,800	28,400	34,200	40,000	45,500	54,000
Compressor							
Type	Swing	Swing	Swing	Swing	Swing	Swing	Swing
RLA	10.5	15.2	20.0	20.0	25.0	25.0	26.0
Condenser Fan Motor							
Horsepower (HP)	3⁄16	3⁄16	3⁄16	3⁄16	¼	¼	¼
FLA	2.18	2.18	2.70	2.70	2.50	2.50	2.50
Refrigeration System							
Refrigerant Line Size1							
Liquid Line Size ("O.D.)	⅜"	⅜"	⅜"	⅜"	⅜"	⅜"	⅜"
Suction Line Size ("O.D.)	¾"	¾"	⅞"	⅞"	1⅛"	1⅛"	1⅛"
Refrigerant Connection Size							
Liquid Valve Size ("O.D.)	⅜"	⅜"	⅜"	⅜"	⅜"	⅜"	⅜"
Suction Valve Size ("O.D.)	¾"	¾"	⅞"	⅞"	⅞"	⅞"	⅞"
Valve Connection Type	Front-Seated	Front-Seated	Front-Seated	Front-Seated	Front-Seated	Front-Seated	Front-Seated
Refrigerant Charge (oz.)	76	76	79	85	116	116	139
Superheat at Service Valve	EEV	EEV	EEV	EEV	EEV	EEV	EEV
Subcooling at Service Valve	10±1°F	12±1°F	10±1°F	10±1°F	8±1°F	9±1°F	8±1°F
Electrical Data							
Voltage-Phase (60 Hz)	208/230-1	208/230-1	208/230-1	208/230-1	208/230-1	208/230-1	208/230-1
Minimum Circuit Ampacity [1]	12.7	17.4	22.7	22.7	34.0	34.0	35.5
Max. Overcurrent Protection [2]	15	20	25	25	35	35	40
Min / Max Volts	197/253	197/253	197/253	197/253	197/253	197/253	197/253
Electrical Conduit Size	½"	½"	½"	½"	½"	½"	½"
Equipment Weight (lbs)	112	112	121	128	168	168	181
Ship Weight (lbs)	130	130	139	146	183	183	196

** Inverter/Controller limited to less than 1 Amp

[1] Wire size should be determined in accordance with National Electrical Codes; extensive wire runs will require larger wire sizes [2] Must use time-delay fuses or HACR-type circuit breakers of the same size as noted.

Notes:

Always check the S&R plate for electrical data on the unit being installed. Unit is charged with refrigerant for 15' of ⅜" liquid line. System charge must be adjusted per Installation Instructions Final Charge Procedure

SAMSUNG HYLEX

Hylex™

UNIVERSAL INVERTER HEAT PUMP CONDENSING UNIT



Hylex™ units are universal, inverter driven heat pumps that can connect to any coil with a TXV (conditions apply) that can be applied to full (new system) or partial (replacement) applications.

SPECIFICATIONS

- 2,3, 4 and 5 ton (nominal) capacity options
- 100% rated heating capacity at 5°F outside temperature
- Can be used with a furnace and A-coil for dual fuel applications
- Wide compressor modulation range providing optimal capacity control and improved comfort
- Reuse existing refrigerant pipes
- Reuse existing control wires
- Side discharge chassis design

COLD CLIMATE

SAMSUNG

HVAC. Built brave.

refrigerative supply

SAMSUNG HYLEX

Hylex™
HYBRID HEAT PUMP

Hylex™ units are universal, inverter driven heat pumps that can connect to any coil with a TXV ***(conditions apply)*** that can be applied to full ***(new system)*** or partial ***(replacement)*** applications.

MODEL	MODEL NUMBER		AC024BXUPCH/AA	AC036BXUDCH/AA	AC036BXUPCH/AA
	US CODE		CXH24UPB	CXH36UDB	CXH36UPB
CAPACITY	NOMINAL CAPACITY	COOLING (Btu/)	24,000	36,000	36,000
		HEATING (Btu/h)	26,000	34,600	34,600
	CAPACITY RANGE	COOLING (Btu/h)	11,000 ~ 30,000	16,500 ~ 40,000	16,500 ~ 45,000
		HEATING (Btu/h)	7,500 ~ 35,000	10,500 ~ 37,000	13,000 ~ 50,000
PERFORMANCE[1]	AHRI 210-240 2017	SEER	UP TO 18	UP TO 18	UP TO 19
		EER	UP TO 11	UP TO 9.3	UP TO 11
		HSPF	UP TO 10	UP TO 9.5	UP TO 10.5
	AHRI 210-240 2023	SEER2	UP TO 16.5	UP TO 17	UP TO 18.5
		EER2	UP TO 10.1	UP TO 9	UP TO 10.5
		HSPF2	UP TO 8.1	UP TO 8.1	UP TO 8.4
POWER	VOLTAGE	Ø / V / Hz	1 / 208-230 / 60	1 / 208-230 / 60	1 / 208-230 / 60
	WORKING VOLTAGE RANGE		187 ~ 253 VAC	187 ~ 253 VAC	187 ~ 253 VAC
	MAX. BREAKER	AMPS	30	35	35
	MIN CIRCUIT AMPACITY	AMPS	24.1	24.4	25.6
DIMENSIONS	W x H x D	IN.	37 x 39 5/16 x 13	37 x 39 5/16 x 13	37 x 47 5/8 x 13
	WEIGHT	LBS.	163	172	196
SOUND PRESSURE	COOLING	dB(A)	50	53	52
	HEATING	dB(A)	52	55	54
OPERATING TEMPERATURES	COOLING		23 ~ 125°F (-5 ~52°C)	23 ~ 125°F (-5 ~52°C)	23 ~ 125°F (-5 ~52°C)
			-4 ~ 122°F (-20 ~ 50°C) W/BAFFLE	-4 ~ 122°F (-20 ~ 50°C) W/BAFFLE	-4 ~ 122°F (-20 ~ 50°C) W/BAFFLE
	HEATING		-13 ~75 °F (-25 ~ 24°C)E	-13 ~75 °F (-25 ~ 24°C)E	-13 ~75 °F (-25 ~ 24°C)E
PIPE CONNECTIONS	LIQUID DIAMETER		3/8″	3/8″	3/8″
	SUCTION DIAMETER	MINIMUM	5/8″	3/4″	3/4″
		STANDARD	3/4″	7/8″	7/8″
		MAXIMUM	7/8″	1 1/8″	1 1/8″
	MAXIMUM LENGTH (FT.)		98	164	164
	MAXIMUM VERTICAL SEPERATION		49	98	98

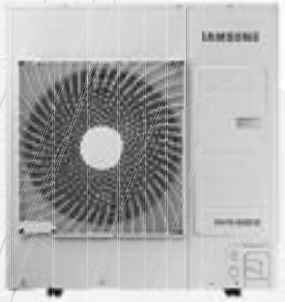

AC024BXUPCH/AA

2 TON

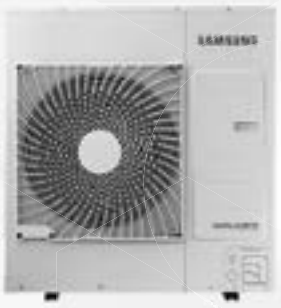

AC036BXUDCH/AA

3 TON, 1 FAN (STANDARD)

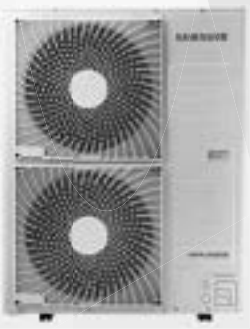

AC036BXUPCH/AA

3 TON, 2 FAN (HIGH EFFICIENCY)

MODEL	MODEL NUMBER		AC048BXUPCH/AA	AC060BXUPCH/AA
	US CODE		CXH48UPB	CXH60UPB
CAPACITY	NOMINAL CAPACITY	COOLING (Btu/)	48,000	57,000
		HEATING (Btu/h)	44,000	53,000
	CAPACITY RANGE	COOLING (Btu/h)	17,500 - 55,000	17,700 - 59,000
		HEATING (Btu/h)	13,800 - 62,000	14,000 - 65,000
PERFORMANCE[1]	AHRI 210-240 2017	SEER	UP TO 17.3	UP TO 17.5
		EER	UP TO 9.3	UP TO 9
		HSPF	UP TO 10	UP TO 10.5
	AHRI 210-240 2023	SEER2	UP TO 17	UP TO 17.5
		EER2	UP TP 8.6	UP TO 8.5
		HSPF2	UP TO 8.5	UP TO 9
POWER	VOLTAGE	Ø / V / Hz	1 / 208-230 / 60	1 / 208-230 / 60
	WORKING VOLTAGE RANGE		187 - 253 VAC	187 - 253 VAC
	MAX. BREAKER	AMPS	40	40
	MIN CIRCUIT AMPACITY	AMPS	32.7	33.2
DIMENSIONS	W x H x D	IN.	37 x 47 5/8 x 13	37 x 55 15/16 x 13
	WEIGHT	LBS.	196	223
SOUND PRESSURE	COOLING	dB(A)	55	56
	HEATING	dB(A)	57	58
OPERATING TEMPERATURES	COOLING		23 - 125°F (-5 - 52°C)	23 - 125°F (-5 - 52°C)
			-4 ~ 122°F (-20 ~ 50°C) W/BAFFLE	-4 ~ 122°F (-20 ~ 50°C) W/BAFFLE
	HEATING		-13 - 75°F (-25 - 24°C)	-13 - 75°F (-25 - 24°C)
PIPE CONNECTIONS	LIQUID DIAMETER		3/8"	3/8"
	SUCTION DIAMETER	MINIMUM	3/4"	3/4"
		STANDARD	7/8"	7/8"
		MAXIMUM	1 1/8"	1 1/8"
	MAXIMUM LENGTH (FT.)		164	98
	MAXIMUM VERTICAL SEPERATION		98	49

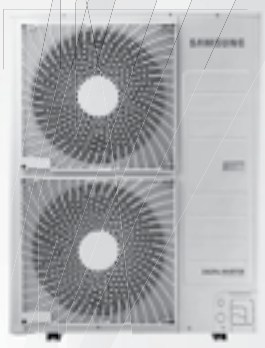

AC048BXUPCH/AA

4 TON, 2 FAN



AC060BXUPCH/AA

5 TON, 2 FAN

COLD CLIMATE

OPPORTUNITIES

DEALER BENEFITS

- Flexible indoor coil options
- Use existing copper
- Flexible pipe diameter options
- Use existing 24VAC low voltage control wires
- Use preferred 24VAC thermostat
- Simple configuration and service
- Web based system configuration tool
- Soft-Start system

HOMEOWNER BENEFITS

- Heating down to -13ºF (-25ºC)
- 100% heating at 5ºF (-15ºC)*
- Electric heat is not required – reduce power use
- Base pan heater
- Small footprint
- Much quieter than traditional systems
- Horizontal discharge

Please refer to the Technical Manuals for precise ratings

SAMSUNG

HVAC. Built brave.

SAMSUNG

Wind-Free™ 3.0 (Specifications 9,000 | 12,000 | 18,000)



US CODE	INDOOR UNIT	RNS09ABC	RNS12ABC	RNS15ABC	RNS18ABC	RNS24ABC
	OUTDOOR UNIT	RXS09ABC	RXS12ABC	RXS12ABC	RXS12ABC	RXS24ABC
MODEL NUMBER	INDOOR UNIT	AR09CSDABWKNCV	AR12CSDABWKNCV	AR15CSDABWKNCV	AR18CSDABWKNCV	AR24CSDABWKNCV
	OUTDOOR UNIT	AR09CSDABWKXCV	AR12CSDABWKXCV	AR15SCDABWKXCV	AR18CSDABWKXCV	AR24CSDABWKXCV
PERFORMANCE	COOLING CAPACITY	9000 Btu/h	12,000 Btu/h	15,000 Btu/h	18,000 Btu/h	21,000 Btu/h
	COOLING RANGE	3,000 - 13,000 Btu/h	3,000 - 15,000 Btu/h	4,000 - 21,000 Btu/h	7,500 - 23,884 Btu/h	8,800 - 31,700 Btu/h
	HEATING CAPACITY	11,000 Btu/h	12,000 Btu/h	15,000 Btu/h	20,000 Btu/h	25,000 Btu/h
	HEATING RANGE	2,400 - 21,000 Btu/h	2,600 - 21,500 Btu/h	3,000 - 35,000 Btu/h	7,000 - 40,000 Btu/h	7,500 - 42,500 Btu/h
	SEER2 / EER2	24.50 / 15.50	23.00 / 13.50	21.50 / 14.00	21.00 / 13.00	20.00 / 12.50
	HSPF2	10.50	10.50	10.80	8.50	9.20
POWER	VOLT / PHASE / Hz	1 / 208-230 / 60	1 / 208-230 / 60	1 / 208-230 / 60	1 / 208-230 / 60	1 / 208-230 / 60
	MAX. BREAKER	20.0 A	20.0 A	30.0 A	30.0 A	30.0 A
	MCA	12.0 A	12.5 A	21.0 A	21.0 A	21.0 A
INDOOR UNIT DIMENSIONS	WIDTH	35 in.	35 in.	41 9/16 in.	41 9/16 in.	41 9/16 in.
	HEIGHT	11 3/4 in.	11 3/4 in.	11 3/4 in.	11 3/4 in.	11 3/4 in.
	DEPTH	8 7/16 in.	8 7/16 in.	8 7/16 in.	8 7/16 in.	8 7/16 in.
	WEIGHT	23.4 lbs.	23.4 lbs.	27.6 lbs.	27.6 lbs.	27.6 lbs.
OUTDOOR UNIT DIMENSIONS	WIDTH	31 1/8 in.	31 1/8 in.	34 5/8 in.	34 5/8 in.	37 in.
	HEIGHT	21 9/16 in.	21 9/16 in.	31 7/16 in.	31 7/16 in.	39 5/16 in.
	DEPTH	11 1/4 in.	11 1/4 in.	12 3/16 in.	12 3/16 in.	13 in.
	WEIGHT	71.4 lbs.	71.4 lbs.	108 lbs.	122.6 lbs.	150.4 lbs.
OPERATING TEMPERATURE	COOLING	14 - 115°F	14 - 115°F	14 - 115°F	14 - 115°F	14 - 115°F
	HEATING	-5 - 75°F	-5 - 75°F	-5 - 75°F	-5 - 75°F	-5 - 75°F
OPERATING TEMPERATURE	COOLING	-10.0 - 46.1°C	-10.0 - 46.1°C		-10.0 - 46.1°C	-10.0 - 46.1°C
	HEATING	-20.5 - 23.9°C	-20.5 - 23.9°C		-20.5 - 23.9°C	-20.5 - 23.9°C
PIPE CONNECTIONS	HIGH SIDE / LOW SIDE	1/4 in. x 3/8 in.	1/4 in. x 3/8 in.	1/4 in. x 1/2 in.	1/4 in. x 1/2 in.	1/4 in. x 5/8 in.
	MAX. LENGTH	66 ft.	66 ft.	98 ft.	98 ft.	98 ft.
	MAX. VERTICAL	49 ft.	49 ft.	66 ft.	66 ft.	66 ft.
REFRIGERANT	R410A CHARGE	40.6 oz.	40.6 oz.	56.5 oz.	63.5 oz.	88.2 oz.
	CHARGED FOR	25 ft.	25 ft.	25 ft.	25 ft.	25 ft.
EVAPORATOR FAN	COOLING CFM (L / M / H	251 / 304 / 357 / 392	251 / 321 / 374 / 427	579 / 533 / 466 / 399	399 / 466 / 533 / 579	445 / 533 / 622 / 713
	HEATING CFM (L / M / H	286 / 339 / 392 / 427	286 / 357 / 410 / 463	600 / 554 / 490 / 423	424 / 491 / 554 / 600	445 / 533 / 622 / 713
CONDENSER FAN	CFM (MAX.)	1,589	1,589	2,013	2,013	2,825
ACCESSORIES	WIRELESS CONTROLLE	INCLUDED	INCLUDED	INCLUDED	INCLUDED	INCLUDED
CERTIFICATIONS	ENERGY STAR® CERTIF					

10- Year Warranty logo - Product registration required. Conditions apply. AHRI Certified (Globally Recognized. Industry Respected.) Logo - The AHRI Certified® mark indicates Samsung's participation in the AHRI Certification program. For verification of individual certified products, go to www.ahridirectory.org. Proper sizing and installation of equipment is critical to achieve performance. Split system air conditioners and heat pumps (excluding ductless systems) must be matched with appropriate coil components to meet ENERGY STAR® criteria. Ask your contractor for details or visit www.energystar.gov. Samsung HVAC maintains a policy of ongoing development, specifications are subject to change without notice. *The WindFree™ unit delivers an air current that is under 0.15 m/s while in WindFree™ mode. Air velocity that is below 0.15 m/s is considered "still air" as defined by ASHRAE 55-2013 (American Society of Heating, Refrigerating, and Air-Conditioning Engineers).

SAMSUNG

Wind-Free™ 3.0e (Specifications 9,000 | 12,000 | 18,000 | 21,000 | 24,000)



US CODE	INDOOR UNIT	RNS09ABC	RNS12ABC	RNS15ABC	RNS18ABC	RNS24ABC
	OUTDOOR UNIT	RXS09ABC	RXS12ABC	RXS12ABC	RXS12ABC	RXS24ABC
MODEL NUMBER	INDOOR UNIT	AR09CSDABWKNCV	AR12CSDABWKNCV	AR15CSDABWKNCV	AR18CSDABWKNCV	AR24CSDABWKNCV
	OUTDOOR UNIT	AR09CSDABWKXCV	AR12CSDABWKXCV	AR15SCDABWKXCV	AR18CSDABWKXCV	AR24CSDABWKXCV
PERFORMANCE	COOLING CAPACITY	9000 Btu/h	12,000 Btu/h	15,000 Btu/h	18,000 Btu/h	21,000 Btu/h
	COOLING RANGE	3,000 - 13,000 Btu/h	3,000 - 15,000 Btu/h	4,000 - 21,000 Btu/h	7,500 - 23,884 Btu/h	8,800 - 31,700 Btu/h
	HEATING CAPACITY	11,000 Btu/h	12,000 Btu/h	15,000 Btu/h	20,000 Btu/h	25,000 Btu/h
	HEATING RANGE	2,400 - 21,000 Btu/h	2,600 - 21,500 Btu/h	3,000 - 35,000 Btu/h	7,000 - 40,000 Btu/h	7,500 - 42,500 Btu/h
	SEER2 / EER2	24.50 / 15.50	23.00 / 13.50	21.50 / 14.00	21.00 / 13.00	20.00 / 12.50
	HSPF2	10.50	10.50	10.80	8.50	9.20
POWER	VOLT / PHASE / Hz	1 / 208-230 / 60	1 / 208-230 / 60	1 / 208-230 / 60	1 / 208-230 / 60	1 / 208-230 / 60
	MAX. BREAKER	20.0 A	20.0 A	30.0 A	30.0 A	30.0 A
	MCA	12.0 A	12.5 A	21.0 A	21.0 A	21.0 A
INDOOR UNIT DIMENSIONS	WIDTH	35 in.	35 in.	41 9/16 in.	41 9/16 in.	41 9/16 in.
	HEIGHT	11 3/4 in.	11 3/4 in.	11 3/4 in.	11 3/4 in.	11 3/4 in.
	DEPTH	8 7/16 in.	8 7/16 in.	8 7/16 in.	8 7/16 in.	8 7/16 in.
	WEIGHT	23.4 lbs.	23.4 lbs.	27.6 lbs.	27.6 lbs.	27.6 lbs.
OUTDOOR UNIT DIMENSIONS	WIDTH	31 1/8 in.	31 1/8 in.	34 5/8 in.	34 5/8 in.	37 in.
	HEIGHT	21 9/16 in.	21 9/16 in.	31 7/16 in.	31 7/16 in.	39 5/16 in.
	DEPTH	11 1/4 in.	11 1/4 in.	12 3/16 in.	12 3/16 in.	13 in.
	WEIGHT	71.4 lbs.	71.4 lbs.	108 lbs.	122.6 lbs.	150.4 lbs.
OPERATING TEMPERATURE	COOLING	14 - 115°F	14 - 115°F	14 - 115°F	14 - 115°F	14 - 115°F
	HEATING	-5 - 75°F	-5 - 75°F	-5 - 75°F	-5 - 75°F	-5 - 75°F
OPERATING TEMPERATURE	COOLING	-10.0 - 46.1°C	-10.0 - 46.1°C		-10.0 - 46.1°C	-10.0 - 46.1°C
	HEATING	-20.5 - 23.9°C	-20.5 - 23.9°C		-20.5 - 23.9°C	-20.5 - 23.9°C
PIPE CONNECTIONS	HIGH SIDE / LOW SIDE	1/4 in. x 3/8 in.	1/4 in. x 3/8 in.	1/4 in. x 1/2 in.	1/4 in. x 1/2 in.	1/4 in. x 5/8 in.
	MAX. LENGTH	66 ft.	66 ft.	98 ft.	98 ft.	98 ft.
	MAX. VERTICAL	49 ft.	49 ft.	66 ft.	66 ft.	66 ft.
REFRIGERANT	R410A CHARGE	40.6 oz.	40.6 oz.	56.5 oz.	63.5 oz.	88.2 oz.
	CHARGED FOR	25 ft.	25 ft.	25 ft.	25 ft.	25 ft.
EVAPORATOR FAN	COOLING CFM (L / M / H /	251 / 304 / 357 / 392	251 / 321 / 374 / 427	579 / 533 / 466 / 399	399 / 466 / 533 / 579	445 / 533 / 622 / 713
	HEATING CFM (L / M / H /	286 / 339 / 392 / 427	286 / 357 / 410 / 463	600 / 554 / 490 / 423	424 / 491 / 554 / 600	445 / 533 / 622 / 713
CONDENSER FAN	CFM (MAX.)	1,589	1,589	2,013	2,013	2,825
ACCESSORIES	WIRELESS CONTROLLEI	INCLUDED	INCLUDED	INCLUDED	INCLUDED	INCLUDED
CERTIFICATIONS	ENERGY STAR® CERTIFI					

10- Year Warranty logo - Product registration required. Conditions apply. AHRI Certified (Globally Recognized. Industry Respected.) Logo - The AHRI Certified® mark indicates Samsung's participation in the AHRI Certification program. For verification of individual certified products, go to www.ahri-directory.org. Proper sizing and installation of equipment is critical to achieve performance. Split system air conditioners and heat pumps (excluding ductless systems) must be matched with appropriate coil components to meet ENERGY STAR® criteria. Ask your contractor for details or visit www.energystar.gov. Samsung HVAC maintains a policy of ongoing development, specifications are subject to change without notice. *The WindFree™ unit delivers an air current that is under 0.15 m/s while in WindFree™ mode. Air velocity that is below 0.15 m/s is considered "still air" as defined by ASHRAE 55-2013 (American Society of Heating, Refrigerating, and Air-Conditioning Engineers).

SAMSUNG

Wind-Free™ 3.0i (Specifications 9,000 | 12,000 | 18,000 | 22,000)



US CODE	INDOOR UNIT	RNS09CPC	RNS12CPC	RNS15CPC	RNS18CPC	RNS24CPC
	OUTDOOR UNIT	RXS09CMC	RXS12CMC	RXS15CMC	RXS18CMC	RXS24CMC
MODEL NUMBER	INDOOR UNIT	AR09CSKCPWKNCV	AR12CSKCPWKNCV	AR15CSKCPWKNCV	AR18CSKCPWKNCV	AR24CSKCPWKNCV
	OUTDOOR UNIT	AR09CSFCMWKXCV	AR12CSFCMWKXCV	AR15CSFCMWKXCV	AR18CSFCMWKXCV	AR24CSFCMWKXCV
PERFORMANCE	COOLING CAPACITY	9000 Btu/h	12,000 Btu/h	15,000 Btu/h	18,000 Btu/h	22,000 Btu/h
	COOLING RANGE	3,000 - 12,000 Btu/h	3,000 - 14,500 Btu/h	5,500 - 20,000 Btu/h	5,500 - 22,000 Btu/h	8,800 - 29,000 Btu/h
	HEATING CAPACITY	11,000 Btu/h	12,000 Btu/h	15,000 Btu/h	21,000 Btu/h	24,000 Btu/h
	HEATING RANGE	2,250 - 19,000 Btu/h	2,600 - 20,000 Btu/h	4,000 - 25,000 Btu/h	4,000 - 26,000 Btu/h	7,500 - 40,000 Btu/h
	SEER2 / EER2	20.00 / 13.00	20.00 / 12.00	19.30 / 12.00	18.70 / 11.00	18.00 / 10.50
	HSPF2	8.30	8.30	8.30	8.00	8.00
POWER	VOLT / PHASE / Hz	1 / 208-230 / 60	1 / 208-230 / 60	1 / 208-230 / 60	1 / 208-230 / 60	1 / 208-230 / 60
	MAX. BREAKER	20.0 A	20.0 A	25.0 A	25.0 A	30.0 A
	MCA	12.0 A	12.5 A	16.0 A	16.0 A	21.0 A
INDOOR UNIT DIMENSIONS	WIDTH	32 5/16 in.	32 5/16 in.	41 9/16 in.	41 9/16 in.	41 9/16 in.
	HEIGHT	13 9/16 in.	13 9/16 in.	13 9/16 in.	13 9/16 in.	13 9/16 in.
	DEPTH	8 7/16 in.	8 7/16 in.	8 7/16 in.	8 7/16 in.	8 7/16 in.
	WEIGHT	20.1 lbs	20.1 lbs	23.4 lbs	25.4 lbs.	25.4 lbs.
OUTDOOR UNIT DIMENSIONS	WIDTH	31 1/8 in.	31 1/8 in.	34 5/8 in.	34 5/8 in.	34 5/8 in.
	HEIGHT	21 9/16 in.	21 9/16 in.	25 1/8 in.	25 1/8 in.	37 7/16 in.
	DEPTH	11 1/4 in.	11 1/4 in.	12 3/16 in.	12 3/16 in.	12 3/16 in.
	WEIGHT	71.4 lbs.	71.4 lbs.	87.1 lbs	87.1 lbs	122.6 lbs.
OPERATING TEMPERATURE	COOLING	14 - 115°F	14 - 115°F	14 - 115°F	14 - 115°F	14 - 115°F
	HEATING	-5 - 75°F	-5 - 75°F	-5 - 75°F	-5 - 75°F	-5 - 75°F
OPERATING TEMPERATURE	COOLING	-10 - 46.1°C	-10 - 46.1°C	-10 - 46.1°C	-10 - 46.1°C	-10 - 46.1°C
	HEATING	-20.5 - 23.9°C	-20.5 - 23.9°C	-20.5 - 23.9°C	-20.5 - 23.9°C	-20.5 - 23.9°C
PIPE CONNECTIONS	HIGH SIDE / LOW SIDE	1/4 in. x 3/8 in.	1/4 in. x 3/8 in.	1/4 in. x 1/2 in.	1/4 in. x 1/2 in.	1/4 in. x 5/8 in.
	MAX. LENGTH	66 ft.	66 ft.	98 ft.	98 ft.	98 ft.
	MAX. VERTICAL	49 ft.	49 ft.	66 ft.	66 ft.	66 ft.
REFRIGERANT	R410A CHARGE	35.2 oz.	35.2 oz.	45.9 oz.	45.9 oz.	63.5 oz.
	CHARGED FOR	25 ft.	25 ft.	25 ft.	25 ft.	25 ft.
EVAPORATOR FAN	COOLING CFM (L / M / H	297 / 346 / 378 / 413	251 / 321 / 374 / 427	438 / 501 / 544 / 586	438 / 501 / 544 / 586	438 / 523 / 586 / 646
	HEATING CFM (L / M / H	328 / 378 / 413 / 445	286 / 357 / 410 / 463	438 / 501 / 544 / 586	438 / 501 / 544 / 586	438 / 523 / 586 / 646
CONDENSER FAN	CFM (MAX.)	1,589	1,589	1,766	1,766	2,013
ACCESSORIES	WIRELESS CONTROLLEI	INCLUDED	INCLUDED	INCLUDED	INCLUDED	INCLUDED
CERTIFICATIONS	ENERGY STAR® CERTIF					

10- Year Warranty logo - Product registration required. Conditions apply. AHRI Certified (Globally Recognized. Industry Respected.) Logo - The AHRI Certified® mark indicates Samsung's participation in the AHRI Certification program. For verification of individual certified products, go to www.ahri-directory.org. Proper sizing and installation of equipment is critical to achieve performance. Split system air conditioners and heat pumps (excluding ductless systems) must be matched with appropriate coil components to meet ENERGY STAR® criteria. Ask your contractor for details or visit www.energystar.gov. Samsung HVAC maintains a policy of ongoing development, specifications are subject to change without notice. *The WindFree™ unit delivers an air current that is under 0.15 m/s while in WindFree™ mode. Air velocity that is below 0.15 m/s is considered "still air" as defined by ASHRAE 55-2013 (American Society of Heating, Refrigerating, and Air-Conditioning Engineers).

SAMSUNG

Max Heat® 3.0 (Specifications 9,000 | 12,000 | 15,000 | 20,000 | 25,000)



US CODE	INDOOR UNIT	RNS09ABC	RNS12ABC	RNS15ABC	RNS18ABC	RNS24ABC
	OUTDOOR UNIT	RXS09ACC	RXS12ACC	RXS15ACC	RXS18ACC	RXS24ACC
MODEL NUMBER	INDOOR UNIT	AR09CSDABWKNCV	AR12CSDABWKNCV	AR15CSDABWKNCV	AR18CSDABWKNCV	AR24CSDABWKNCV
	OUTDOOR UNIT	AR09CSDACWKXCV	AR12CSDACWKXCV	AR15CSDACWKXCV	AR18CSDACWKXCV	AR24CSDACWKXCV
PERFORMANCE	COOLING CAPACITY	9000 Btu/h	12,000 Btu/h	15,000 Btu/h	18,000 Btu/h	21,000 Btu/h
	COOLING RANGE	3,000 - 13,000 Btu/h	3,000 - 15,000 Btu/h	4,000 - 21,000 Btu/h	7,500 - 23,884 Btu/h	8,800 - 31,700 Btu/h
	HEATING CAPACITY	11,000 Btu/h	12,000 Btu/h	15,000 Btu/h	20,000 Btu/h	25,000 Btu/h
	HEATING RANGE	2,400 - 21,000 Btu/h	2,600 - 21,500 Btu/h	3,000 - 35,000 Btu/h	7,000 - 40,000 Btu/h	7,500 - 42,500 Btu/h
	SEER2 / EER2	24.50 / 15.50	23.00 / 13.50	21.50 / 14.00	21.00 / 13.00	20.00 / 12.50
	HSPF2	10.50	10.50	10.80	8.50	9.20
POWER	VOLT / PHASE / Hz	1 / 208-230 / 60	1 / 208-230 / 60	1 / 208-230 / 60	1 / 208-230 / 60	1 / 208-230 / 60
	MAX. BREAKER	20.0 A	20.0 A	30.0 A	30.0 A	30.0 A
	MCA	12.0 A	12.5 A	21.0 A	21.0 A	21.0 A
INDOOR UNIT DIMENSIONS	WIDTH	35 in.	35 in.	41 9/16 in.	41 9/16 in.	41 9/16 in.
	HEIGHT	11 3/4 in.	11 3/4 in.	11 3/4 in.	11 3/4 in.	11 3/4 in.
	DEPTH	8 7/16 in.	8 7/16 in.	8 7/16 in.	8 7/16 in.	8 7/16 in.
	WEIGHT	23.4 lbs.	23.4 lbs.	27.6 lbs.	27.6 lbs.	27.6 lbs.
OUTDOOR UNIT DIMENSIONS	WIDTH	31 1/8 in.	31 1/8 in.	34 5/8 in.	34 5/8 in.	37 in.
	HEIGHT	21 9/16 in.	21 9/16 in.	31 7/16 in.	31 7/16 in.	39 5/16 in.
	DEPTH	11 1/4 in.	11 1/4 in.	12 3/16 in.	12 3/16 in.	13 in.
	WEIGHT	71.4 lbs.	71.4 lbs.	108 lbs.	122.6 lbs.	150.4 lbs.
OPERATING TEMPERATURE	COOLING	0 - 115°F	0 - 115°F	0 - 115°F	0 - 115°F	0 - 115°F
	HEATING	-22 - 75°F	-22 - 75°F	-22 - 75°F	-22 - 75°F	-22 - 75°F
OPERATING TEMPERATURE	COOLING	-17.7 - 46.1°C	-17.7 - 46.1°C	-17.7 - 46.1°C	-17.7 - 46.1°C	-17.7 - 46.1°C
	HEATING	-30.0 - 23.9°C	-30.0 - 23.9°C	-30.0 - 23.9°C	-30.0 - 23.9°C	-30.0 - 23.9°C
PIPE CONNECTIONS	HIGH SIDE / LOW SIDE	1/4 in. x 3/8 in.	1/4 in. x 3/8 in.	1/4 in. x 1/2 in.	1/4 in. x 1/2 in.	1/4 in. x 5/8 in.
	MAX. LENGTH	66 ft.	66 ft.	98 ft.	98 ft.	98 ft.
	MAX. VERTICAL	49 ft.	49 ft.	66 ft.	66 ft.	66 ft.
REFRIGERANT	R410A CHARGE	40.6 oz.	40.6 oz.	56.5 oz.	63.5 oz.	88.2 oz.
	CHARGED FOR	25 ft.	25 ft.	25 ft.	25 ft.	25 ft.
EVAPORATOR FAN	COOLING CFM (L / M / H /	251 / 304 / 357 / 392	251 / 321 / 374 / 427	399 / 466 / 533 / 579	399 / 466 / 533 / 579	445 / 533 / 622 / 713
	HEATING CFM (L / M / H /	286 / 339 / 392 / 427	286 / 357 / 410 / 463	423 / 491 / 554 / 600	424 / 491 / 554 / 600	445 / 533 / 622 / 713
CONDENSER FAN	CFM (MAX.)	1,589	1,589	2,013	2,013	2,825
ACCESSORIES	WIRELESS CONTROLLEI	INCLUDED	INCLUDED	INCLUDED	INCLUDED	INCLUDED
CERTIFICATIONS	ENERGY STAR® CERTIFI					

10- Year Warranty logo - Product registration required. Conditions apply. AHRI Certified (Globally Recognized. Industry Respected.) Logo - The AHRI Certified® mark indicates Samsung's participation in the AHRI Certification program. For verification of individual certified products, go to www.ahridirectory.org. Proper sizing and installation of equipment is critical to achieve performance. Split system air conditioners and heat pumps (excluding ductless systems) must be matched with appropriate coil components to meet ENERGY STAR® criteria. Ask your contractor for details or visit www.energystar.gov. Samsung HVAC maintains a policy of ongoing development, specifications are subject to change without notice. *The WindFree™ unit delivers an air current that is under 0.15 m/s while in WindFree™ mode. Air velocity that is below 0.15 m/s is considered "still air" as defined by ASHRAE 55-2013 (American Society of Heating, Refrigerating, and Air-Conditioning Engineers).

Max Heat®

Intertek

SAMSUNG

Max Heat® 3.0 (36,000)

US CODE	**INDOOR UNIT**	RNS36UMB
	OUTDOOR UNIT	RXS36UMB
MODEL NUMBER	**INDOOR UNIT**	AR36BSHUMGMNCV
	OUTDOOR UNIT	AR36BSHUMGMXCV
PERFORMANCE	COOLING CAPACITY	36,000 Btu/h
	COOLING RANGE	9,500 - 39,000 Btu/h
	HEATING CAPACITY	40,000 Btu/h
	HEATING RANGE	9,500 - 47,000 Btu/h
	SEER / EER	18.60 / 9.50
	HSPF	10.10
POWER	VOLT / PHASE / Hz	1 / 208-230 / 60
	MAX. BREAKER	35 A
	MCA	21.4 A
INDOOR UNIT DIMENSIONS	WIDTH	50 3/8 in.
	HEIGHT	9 15/16 in.
	DEPTH	13 9/16 in.
	WEIGHT	40.8 lbs.
OUTDOOR UNIT DIMENSIONS	WIDTH	37 in.
	HEIGHT	47 11/16 in.
	DEPTH	13 in.
	WEIGHT	189.60 lbs.
OPERATING TEMPERATURE	COOLING	0 - 122°F
	HEATING	-4 - 75°F
OPERATING TEMPERATURE	COOLING	-18.0 - 50.0°C
	HEATING	-20 - 24°C
PIPE CONNECTIONS	HIGH SIDE / LOW SIDE	3/8 in. / 5/8 in.
	MAX. LENGTH	246 ft.
	MAX. VERTICAL	98.4 ft.
REFRIGERANT	R410A CHARGE	6.39 lbs.
	CHARGED FOR	24.6 ft.
EVAPORATOR FAN	CFM (L / M / H)	699 / 752 / 830
CONDENSER FAN	CFM (MAX.)	3,532
ACCESSORIES	WIRELESS CONTROLLE	INCLUDED
CERTIFICATIONS	ENERGY STAR® CERTIF	-



10- Year Warranty logo - Product registration required. Conditions apply. AHRI Certified (Globally Recognized. Industry Respected.) Logo - The AHRI Certified® mark indicates Samsung's participation in the AHRI Certification program. For verification of individual certified products, go to www.ahridirectory.org.

Max Heat®

SAMSUNG

Outdoor Units

Free Joint Multi (FJM)



- Available capacities: 18K, 24K, 36K, and 48K Btu/h
- SEER up to 19.7
- HSPF up to 10.3
- Supports 2 to 5 indoor units
- Select models are Energy Star® labeled

Operating range
- Cooling: 14 – 114.8°F (-10.0 – 46.0°C)
- Heating: 5 – 75°F (-15.0 – 24.0°C)

Can be configured as Cooling Only, Heating Only or Heating/Cooling

Free Joint Multi (FJM) Max Heat®



- Available capacities: 20K, 24K, 30K, and 36K Btu/h
- SEER up to 20.0
- HSPF up to 11.0
- Supports 2 to 4 indoor units
- Integral base pan heater as standard
- Select models are Energy Star® labeled

Operating range
- Cooling: 14 – 114.8°F (-10.0 – 46.0°C)
- Heating: -13 - 75°F (-25.0 - 24.0°C)
    - 100% heating capacity at 5°F (-15.0°C)

Features

- Simplified connection to central controls with direct connection to R1/R2 at the outdoor unit.
- “Home run” piping to each indoor unit
- Compatible with NASA communication protocol controllers
- Twin BLDC compressor for high efficiency, low noise, and vibration.
- One button auto addressing for simple system setup when completing installation.

SAMSUNG

Indoor Units

Slim Duct



- Available capacities: 9K, 12K and 18K Btu/h
- Single fan motor with three fan speeds and auto setting
- Integral condensate pump with float switch as standard
- 0.2” WC maximum static pressure
- Compatible with FJM and Light Commercial (CAC) outdoor unit

Duct S



- Available capacities: 9K, 12K, 15K and 18K Btu/h
- Single fan motor with three fan speeds and auto setting
- Integral condensate pump with float switch as standard
- 0.59” WC maximum static pressure
- Compatible with FJM outdoor units

Wind Free™* 3.0



- Available capacities: 7K1, 9K, 12K, 15K1, 18K and 24K Btu/h
- WindFree™* Cooling technology
- Built-in Wi-Fi
- Design incorporates interlocking components in place of threaded fasteners to reduce the time and effort it takes to install and service a system.
- Compatible with Residential (RAC) and FJM outdoor units1
- Wireless controller with holder included as standard.

Wind Free™* 3.0e



- Available capacities: 7K1, 9K, 12K, 15K1, 18K and 24K Btu/h
- WindFree™* Cooling technology
- Built-in Wi-Fi
- Design incorporates interlocking components in place of threaded fasteners to reduce the time and effort it takes to install and service a system.
- Compatible with Residential (RAC) and FJM outdoor units1
- Wireless controller with holder included as standard.

**The WindFree™ unit delivers an air current that is under 0.15 m/s while in WindFree™ mode. Air velocity that is below 0.15 m/s is considered “still air” as defined by ASHRAE 55-2013 (American Society of Heating, Refrigerating, and Air-Conditioning Engineers).*
17K and 15K Btu/h indoor units are compatible with FJM systems only.

SAMSUNG

Indoor Units

WindFree™* Mini 4-Way Cassette



- Available capacities: 9K, 12K and 18K Btu/h
- WindFree™* Cooling technology
- The panel is designed to fit in a standard 2x2 feet ceiling grid without interfering with adjacent ceiling tiles, lights, or sprinkler systems.
- Compatible with FJM and Light Commercial (CAC) outdoor units

WindFree™* 1-Way Cassette



- Available capacities: 9K and 12K Btu/h
- WindFree™* Cooling technology
- Blade angles can move from 30-80° to reach every corner of the room.
- Compatible with FJM and Light Commercial (CAC) outdoor units

Console



- Available capacities: 9K, 12K, 15K2, and 18K Btu/h
- The console unit can be installed sitting on the floor or hanging low on a wall, making it a great option for replacing a radiator in order to provide both heating and cooling in almost any space.
- Compatible with Light Commercial (CAC) and FJM outdoor units
- Wireless controller with holder included as standard.
- The front panel includes LED indicator lights, touch control (power), wireless control IR receiver, and 1 motorized louver.

Multi-Position Air Handler



- Available capacities: 12K, 18K and 24K Btu/h
- Can be installed in numerous positions (upflow, left, right or downflow) for added installation flexibility.
- 0.8” WC maximum static pressure
- Compatible with FJM outdoor units

**The WindFree™ unit delivers an air current that is under 0.15 m/s while in WindFree™ mode. Air velocity that is below 0.15 m/s is considered “still air” as defined by ASHRAE 55-2013 (American Society of Heating, Refrigerating, and Air-Conditioning Engineers).*
17K and 15K Btu/h indoor units are compatible with FJM systems only.

SAMSUNG

WindFree™* Mini 4-Way Cassette (Specifications - 9,000 | 12,000 | 18,000)



US CODE	INDOOR UNIT	CNH09NDB	CNH12NDB	CNH18NDB
MODEL NUMBER	INDOOR UNIT	AC009BNNDCH/AA	AC012BNNDCH/AA	AC018BNNDCH/AA
PERFORMANCE	COOLING CAPACITY	9,100 Btu/h	10,800 Btu/h	17,400 Btu/h
	HEATING CAPACITY	10,000 Btu/h	13,500 Btu/h	20,000 Btu/h
POWER	VOLT / PHASE / Hz	1 / 208-230 / 60	1 / 208-230 / 60	1 / 208-230 / 60
UNIT DIMENSIONS	WIDTH	22 5/8 in.	22 5/8 in.	22 5/8 in.
	HEIGHT	9 13/16 in.	9 13/16 in.	9 13/16 in.
	DEPTH	22 5/8 in.	22 5/8 in.	22 5/8 in.
	WEIGHT	25.6 lbs.	25.6 lbs.	25.6 lbs.
PIPE CONNECTIONS	HIGH SIDE / LOW SIDE	1/4 in. / 3/8 in.	1/4 in. / 3/8 in.	1/4 in. / 1/2 in.
	DRAIN	1 1/4 in. OD, 1 in. ID	1 1/4 in. OD, 1 in. ID	1 1/4 in. OD, 1 in. ID
EVAPORATOR FAN	CFM (L / M / H)	212 / 247 / 283	226 / 283 / 325	300 / 336 / 371
FASCIA PANEL (SOLD SEPARATELY)	MODEL NUMBER	PC4SUFMUN	PC4SUFMUN	PC4SUFMUN
	LENGTH	24 7/16 in.	24 7/16 in.	24 7/16 in.
	WIDTH	24 7/16 in.	24 7/16 in.	24 7/16 in.
	HEIGHT	1 13/16 in.	1 13/16 in.	1 13/16 in.
	WEIGHT	6 lbs.	6 lbs.	6 lbs.

10 YEAR WARRANTY Product Registration Required Conditions Apply

AHRI CERTIFIED TT www.ahridirectory.org Globally Recognized. Industry Respected.

ETL LISTED C US Intertek

ττThe AHRI Certified® mark indicates Samsung's participation in the AHRI Certification program. For verification of individual certified products, go to www.ahridirectory.org.
*The WindFree™ unit delivers an air current that is under 0.15 m/s while in WindFree™ mode. Air velocity that is below 0.15 m/s is considered "still air" as defined by ASHRAE 55-2013 (American Society of Heating, Refrigerating, and Air-Conditioning Engineers).

[1] MIM-H05UN is only required for remote control of cassette, console, and duct indoor units. Only one per system is required.
Samsung HVAC maintains a policy of ongoing development, specifications are subject to change without notice.

SAMSUNG

WindFree™* Mini 1-Way Cassette (Specifications - 9,000 | 12,000 | 18,000)



US CODE	INDOOR UNIT	CNH091DB	CNH121DB
MODEL NUMBER	INDOOR UNIT	AC009BN1DCH/AA	AC012BN1DCH/AA
PERFORMANCE	COOLING CAPACITY	9,000 Btu/h	12,000 Btu/h
	HEATING CAPACITY	12,000 Btu/h	14,000 Btu/h
POWER	VOLT / PHASE / Hz	1 / 208-230 / 60	1 / 208-230 / 60
UNIT DIMENSIONS	WIDTH	38 3/16 in.	38 3/16 in.
	HEIGHT	5 5/16 in.	5 5/16 in.
	DEPTH	16 1/8 in.	16 1/8 in.
	WEIGHT	20.5 lbs.	20.5 lbs.
PIPE CONNECTIONS	HIGH SIDE / LOW SIDE	1/4 in. / 3/8 in.	1/4 in. / 3/8 in.
	DRAIN	1 1/4 in. OD, 1 in. ID	1 1/4 in. OD, 1 in. ID
EVAPORATOR FAN	CFM (L / M / H)	205 / 230 / 258	254 / 290 / 318
FASCIA PANEL (SOLD SEPARATELY)	MODEL NUMBER	PC1NWFMUN	PC1NWFMUN
	LENGTH	19.69 in.	19.69 in.
	WIDTH	47.17 in.	47.17 in.
	HEIGHT	1.38 in.	1.38 in.
	WEIGHT	9.5 lbs.	9.5 lbs.

10 YEAR WARRANTY Product Registration Required Conditions Apply

AHRI CERTIFIED® www.ahridirectory.org TT
Globally Recognized. Industry Respected.

C ETL LISTED US
Intertek

πThe AHRI Certified® mark indicates Samsung's participation in the AHRI Certification program. For verification of individual certified products, go to www.ahridirectory.org.
*The WindFree™ unit delivers an air current that is under 0.15 m/s while in WindFree™ mode. Air velocity that is below 0.15 m/s is considered "still air" as defined by ASHRAE 55-2013 (American Society of Heating, Refrigerating, and Air-Conditioning Engineers).

[1] MIM-H05UN is only required for remote control of cassette, console, and duct indoor units. Only one per system is required.
Samsung HVAC maintains a policy of ongoing development, specifications are subject to change without notice.

SAMSUNG

Console



US CODE	US CODE	CNH09JDB	CNH12JDB	CNH15JDB	CNH18JDB
MODEL NUMBER	MODEL NUMBER	AC009BNJDCH/AA	AC012BNJDCH/AA	AC015BNJDCH/AA	AC018BNJDCH/AA
PERFORMANCE	COOLING CAPACITY	9,000 Btu/h	10,200 Btu/h	15,000 Btu/h	17,000 Btu/h
	HEATING CAPACITY	10,100 Btu/h	13,000 Btu/h	18,000 Btu/h	19,000 Btu/h
POWER	VOLT / PHASE / Hz	1 / 208-230 / 60	1 / 208-230 / 60	1 / 208-230 / 60	1 / 208-230 / 60
UNIT DIMENSIONS	WIDTH	28 3/8 in.	28 3/8 in.	28 3/8 in.	28 3/8 in.
	HEIGHT	7 13/16 in.	7 13/16 in.	7 13/16 in.	7 13/16 in.
	DEPTH	24 7/16 in.	24 7/16 in.	24 7/16 in.	24 7/16 in.
	WEIGHT	34.6 lbs.	34.6 lbs.	35.1 lbs.	35.1 lbs.
PIPE CONNECTIONS	HIGH SIDE / LOW SIDE	1/4 in. / 3/8 in.	1/4 in. / 3/8 in.	1/4 in. / 1/2 in.	1/4 in. / 1/2 in.
	DRAIN	1 1/4 in. OD, 1 in. ID	1 1/4 in. OD, 1 in. ID	1 1/4 in. OD, 1 in. ID	1 1/4 in. OD, 1 in. ID
EVAPORATOR FAN	CFM (L / M / H)	212 / 240 / 265	220 / 254 / 300	254 / 290 / 318	261 / 297 / 332
ACCESSORIES	WIRELESS CONTROLL	INCLUDED	INCLUDED	INCLUDED	INCLUDED

Slim Duct (Specifications - 9,000 | 12,000 | 18,000)

US CODE	INDOOR UNIT	CNH09LDB	CNH12LDB	CNH18LDB
MODEL NUMBER	INDOOR UNIT	AC009BNLDCH/AA	AC012BNLDCH/AA	AC018BNLDCH/AA
PERFORMANCE	COOLING CAPACITY	9,000 Btu/h	12,000 Btu/h	18,000 Btu/h
	HEATING CAPACITY	12,000 Btu/h	14,000 Btu/h	20,000 Btu/h
POWER	VOLT / PHASE / Hz	1 / 208-230 / 60	1 / 208-230 / 60	1 / 208-230 / 60
UNIT DIMENSIONS	WIDTH	35 7/16 in.	35 7/16 in.	43 5/16 in.
	HEIGHT	7 13/16 in.	7 13/16 in.	7 13/16 in.
	DEPTH	15 3/4 in.	15 3/4 in.	15 3/4 in.
	WEIGHT	41.7 lbs.	41.7 lbs.	49.4 lbs.
PIPE CONNECTIONS	HIGH SIDE / LOW SIDE	1/4 in. / 3/8 in.	1/4 in. / 3/8 in.	1/4 in. / 1/2 in.
	DRAIN	1 1/4 in. OD, 1 in. ID	1 1/4 in. OD, 1 in. ID	1 1/4 in. OD, 1 in. ID
EVAPORATOR FAN	CFM (L / M / H)	194 / 230 / 283	300 / 353 / 399	353 / 459 / 600
	STATIC PRESSURE (STANDA	0.1 in. WC	0.1 in. WC	0.1 in. WC
	STATIC PRESSURE (MIN./MA	0.0 / 0.24 in. WC	0.0 / 0.24 in. WC	0.0 / 0.24 in. WC



10 YEAR WARRANTY Product Registration Required Conditions Apply

AHRI CERTIFIED® www.ahridirectory.org Globally Recognized. Industry Respected. π

Intertek

πThe AHRI Certified® mark indicates Samsung's participation in the AHRI Certification program. For verification of individual certified products, go to www.ahridirectory.org.
[1] MIM-H05UN is only required for remote control of cassette, console, and duct indoor units. Only one per system is required.
Samsung HVAC maintains a policy of ongoing development, specifications are subject to change without notice.

SAMSUNG

Duct S (Specifications - 9,000 | 12,000 | 15,000 | 18,000)



US CODE	INDOOR UNIT	JNH09HDB	JNH12HDB	JNH15HDB	JNH18LDT
MODEL NUMBER	INDOOR UNIT	AJ009BNHDCH/AA	AJ012BNHDCH/AA	AJ015BNHDCH/AA	AJ018BNHDCH/AA
PERFORMANCE	COOLING CAPACITY	9,000 Btu/h	12,000 Btu/h	15,000 Btu/h	18,000 Btu/h
	HEATING CAPACITY	12,000 Btu/h	14,000 Btu/h	18,000 Btu/h	21,000 Btu/h
POWER	VOLT / PHASE / Hz	1 / 208-230 / 60	1 / 208-230 / 60	1 / 208-230 / 60	1 / 208-230 / 60
UNIT DIMENSIONS	WIDTH	33 7/16 in.	33 7/16 in.	33 7/16 in.	33 7/16 in.
	HEIGHT	9 13/16 in.	9 13/16 in.	9 13/16 in.	9 13/16 in.
	DEPTH	27 9/16 in.	27 9/16 in.	27 9/16 in.	27 9/16 in.
	WEIGHT	58.9 lbs.	58.9 lbs.	58.9 lbs.	58.9 lbs.
PIPE CONNECTIONS	HIGH SIDE / LOW SIDE	1/4 in. / 3/8 in.	1/4 in. / 3/8 in.	1/4 in. / 1/2 in.	1/4 in. / 1/2 in.
	DRAIN	1 1/4 in. OD, 1 in. ID	1 1/4 in. OD, 1 in. ID	1 1/4 in. OD, 1 in. ID	1 1/4 in. OD, 1 in. ID
EVAPORATOR FAN	CFM (L / M / H)	243 / 258 / 297	258 / 314 / 399	307 / 374 / 441	346 / 417 / 502
	STATIC PRESSURE (STANDA	0.18 in. WC	0.18 in. WC	0.18 in. WC	0.18 in. WC
	STATIC PRESSURE (MIN./MA)	0.10 / 0.59 in. WC	0.10 / 0.59 in. WC	0.10 / 0.59 in. WC	0.10 / 0.59 in. WC

10 YEAR WARRANTY Product Registration Required Conditions Apply

AHRI CERTIFIED® www.ahridirectory.org Globally Recognized. Industry Respected. π

C ETL LISTED US Intertek

πThe AHRI Certified® mark indicates Samsung's participation in the AHRI Certification program. For verification of individual certified products, go to www.ahridirectory.org.
[1] MIM-H05UN is only required for remote control of cassette, console, and duct indoor units. Only one per system is required.
Samsung HVAC maintains a policy of ongoing development, specifications are subject to change without notice.

SAMSUNG

Multi-Position Air Handler

MODEL NUMBER	INDOOR UNIT	AC012BNZDCH/AA	AC018BNZDCH/AA	AC024BNZDCH/AA
PERFORMANCE	COOLING CAPACITY	12,000 Btu/h	18,000 Btu/h	24,000 Btu/h
	HEATING CAPACITY	13,500 Btu/h	20,000 Btu/h	27,000 Btu/h
POWER	VOLT / PHASE / Hz	1 / 208-230 / 60	1 / 208-230 / 60	1 / 208-230 / 60
UNIT DIMENSIONS	WIDTH	17 1/2 in.	17 1/2 in.	17 1/2 in.
	HEIGHT	43 in.	43 in.	43 in.
	DEPTH	21 3/4 in.	21 3/4 in.	21 3/4 in.
	WEIGHT	95.9 lbs.	98.1 lbs.	98.1 lbs.
PIPE CONNECTIONS	HIGH SIDE / LOW SIDE	1/4 in. / 3/8 in.	1/4 in. / 1/2 in.	1/4 in. / 1/2 in.
	DRAIN	3/4" FNPT	3/4" FNPT	3/4" FNPT
EVAPORATOR FAN	CFM (L / M / H)	244 / 286 / 374	494 / 530 / 600	547 / 636 / 759
	STATIC PRESSURE (STANDA	0.4 in. WC	0.58 in. WC	0.58 in. WC
	STATIC PRESSURE (MIN./MA	0.10 / 0.50 in. WC	0 / 0.80 in. WC	0 / 0.80 in. WC



10 YEAR WARRANTY Product Registration Required Conditions Apply

AHRI CERTIFIED www.ahridirectory.org Globally Recognized. Industry Respected.

ETL LISTED c US Intertek

πThe AHRI Certified® mark indicates Samsung's participation in the AHRI Certification program. For verification of individual certified products, go to www.ahridirectory.org. ¹ MIM-H05UN is only required for remote control of cassette, console, and duct indoor units. Only one per system is required. Samsung HVAC maintains a policy of ongoing development, specifications are subject to change without notice.

Free Joint Multi (FJM) WindFree™ 3.0



US CODE	INDOOR UNIT	RNS07ABF	RNS09ABC	RNS12ABC	RNS15AFC	RNS18ABC	RNS24ABC
MODEL NUMBER	INDOOR UNIT	AR07CSDAFWKNCV	AR09CSDABWKNCV	AR12CSDABWKNCV	AR15CSDAFWKNCV	AR18CSDABWKNCV	AR24CSDABWKNCV
PERFORMANCE	COOLING CAPACITY	7,000 Btu/h	9,000 Btu/h	12,000 Btu/h	15,000 Btu/h	18,000 Btu/h	21,000 Btu/h
	HEATING CAPACITY	7,500 Btu/h	11,000 Btu/h	12,000 Btu/h	18,000 Btu/h	20,600 Btu/h	27,500 Btu/h
POWER	VOLT / PHASE / Hz	1 / 208-230 / 60	1 / 208-230 / 60	1 / 208-230 / 60	1 / 208-230 / 60	1 / 208-230 / 60	1 / 208-230 / 60
	MAX. BREAKER	See Outdoor Unit	See Outdoor Unit	See Outdoor Unit	See Outdoor Unit	See Outdoor Unit	See Outdoor Unit
UNIT DIMENSIONS	WIDTH	35 in.	35 in.	35 in.	35 in.	41 9/16 in.	41 9/16 in.
	HEIGHT	11 3/4 in.	11 3/4 in.	11 3/4 in.	11 3/4 in.	11 3/4 in.	11 3/4 in.
	DEPTH	8 7/16 in.	8 7/16 in.	8 7/16 in.	8 7/16 in.	8 7/16 in.	8 7/16 in.
	WEIGHT	23.4 lbs.	23.4 lbs.	23.4 lbs.	23.4 lbs.	27.6 lbs.	27.6 lbs.
PIPE CONNECTIONS	HIGH SIDE / LOW SIDE	1/4 in. / 3/8 in.	1/4 in. / 3/8 in.	1/4 in. / 3/8 in.	1/4 in. / 3/8 in.	1/4 in. / 1/2 in.	1/4 in. / 5/8 in.
EVAPORATOR FAN	COOLING CFM (L / M / H	258 / 297 / 323 / 350	258 / 298 / 337 / 364	250 / 301 / 340 / 378	260 / 313 / 366 / 406	427 / 481 / 536 / 572	484 / 560 / 636 / 711
	HEATING CFM (L / M / H / T)	288 / 328 / 355 / 381	289 / 329 / 369 / 396	282 / 335 / 374 / 413	279 / 331 / 383 / 422	447 / 501 / 556 / 592	490 / 566 / 643 / 719
ACCESSORIES	WIRELESS CONTROLLER	INCLUDED	INCLUDED	INCLUDED	INCLUDED	INCLUDED	INCLUDED

10- Year Warranty logo - Product registration required. Conditions apply. AHRI Certified (Globally Recognized. Industry Respected.) Logo - The AHRI Certified® mark indicates Samsung's participation in the AHRI Certification program. For verification of individual certified products, go to www.ahridirectory.org. Proper sizing and installation of equipment is critical to achieve performance. Split system air conditioners and heat pumps (excluding ductless systems) must be matched with appropriate coil components to meet ENERGY STAR® criteria. Ask your contractor for details or visit www.energystar.gov. Samsung HVAC maintains a policy of ongoing development, specifications are subject to change without notice. *The WindFree™ unit delivers an air current that is under 0.15 m/s while in WindFree™ mode. Air velocity that is below 0.15 m/s is considered "still air" as defined by ASHRAE 55-2013 (American Society of Heating, Refrigerating, and Air-Conditioning Engineers).

SAMSUNG

Free Joint Multi (FJM) WindFree™ 3.0e

US CODE	INDOOR UNIT	RNS07CMC	RNS09CMC	RNS12CMC	RNS15CMC	RNS18CMC	RNS24CMC
MODEL NUMBER	INDOOR UNIT	AR07CSFCMWKNCV	AR09CSFCMWKNCV	AR12CSFCMWKNCV	AR15CSFCMWKNCV	AR18CSFCMWKNCV	AR24CSFCMWKNCV
PERFORMANCE	COOLING CAPACITY	7,000 Btu/h	9,000 Btu/h	12,000 Btu/h	15,000 Btu/h	18,000 Btu/h	22,000 Btu/h
	HEATING CAPACITY	7,500 Btu/h	11,000 Btu/h	12,000 Btu/h	15,000 Btu/h	21,000 Btu/h	24,000 Btu/h
POWER	VOLT / PHASE / Hz	1 / 208-230 / 60	1 / 208-230 / 60	1 / 208-230 / 60	1 / 208-230 / 60	1 / 208-230 / 60	1 / 208-230 / 60
	MAX. BREAKER	See Outdoor Unit	See Outdoor Unit	See Outdoor Unit	See Outdoor Unit	See Outdoor Unit	See Outdoor Unit
UNIT DIMENSIONS	WIDTH	32 5/16 in.	32 5/16 in.	32 5/16 in.	41 9/16 in.	41 9/16 in.	41 9/16 in.
	HEIGHT	11 3/4 in.	11 3/4 in.	11 3/4 in.	11 3/4 in.	11 13/16 in.	11 13/16 in.
	DEPTH	8 7/16 in.	8 7/16 in.	8 7/16 in.	8 7/16 in.	8 7/16 in.	8 7/16 in.
	WEIGHT	20.1 lbs.	20.1 lbs.	20.1 lbs.	23.4 lbs.	25.4 lbs.	25.4 lbs.
PIPE CONNECTIONS	HIGH SIDE / LOW SIDE	1/4 in. x 3/8 in.	1/4 in. x 3/8 in.	1/4 in. x 3/8 in.	1/4 in. x 1/2 in.	1/4 in. x 1/2 in.	1/4 in. x 5/8 in.
EVAPORATOR FAN	COOLING CFM (L / M / H	309 / 322 / 336 / 350	340 / 368 / 382 / 396	309 / 337 / 364 / 378	401 / 435 / 469 / 486	401 / 435 / 469 / 486	465 / 525 / 584 / 623
	HEATING CFM (L / M / H / T)	340 / 354 / 368 / 381	340 / 368 / 382 / 396	343 / 371 / 399 / 413	465 / 525 / 584 / 623	465 / 525 / 584 / 623	470 / 529 / 589 / 629
ACCESSORIES	WIRELESS CONTROLLER	INCLUDED	INCLUDED	INCLUDED	INCLUDED	INCLUDED	INCLUDED

10- Year Warranty logo - Product registration required. Conditions apply. AHRI Certified (Globally Recognized. Industry Respected.) Logo - The AHRI Certified® mark indicates Samsung's participation in the AHRI Certification program. For verification of individual certified products, go to www.ahridirectory.org. Proper sizing and installation of equipment is critical to achieve performance. Split system air conditioners and heat pumps (excluding ductless systems) must be matched with appropriate coil components to meet ENERGY STAR® criteria. Ask your contractor for details or visit www.energystar.gov. Samsung HVAC maintains a policy of ongoing development, specifications are subject to change without notice. *The WindFree™ unit delivers an air current that is under 0.15 m/s while in WindFree™ mode. Air velocity that is below 0.15 m/s is considered "still air" as defined by ASHRAE 55-2013 (American Society of Heating, Refrigerating, and Air-Conditioning Engineers).



C ETL US LISTED Intertek

Free Joint Multi (FJM) WindFree™ 3.0i

US CODE	INDOOR UNIT	RNS07CPC	RNS09CPC	RNS12CPC	RNS15CPC	RNS18CPC	RNS24CPC
MODEL NUMBER	INDOOR UNIT	AR07CSKCPWKNCV	AR09CSKCPWKNCV	AR12CSKCPWKNCV	AR15CSKCPWKNCV	AR18CSKCPWKNCV	AR24CSKCPWKNCV
PERFORMANCE	COOLING CAPACITY	7,000 Btu/h	9,000 Btu/h	12,000 Btu/h	15,000 Btu/h	18,000 Btu/h	22,000 Btu/h
	HEATING CAPACITY	7,500 Btu/h	11,000 Btu/h	12,000 Btu/h	15,000 Btu/h	21,000 Btu/h	24,000 Btu/h
POWER	VOLT / PHASE / Hz	1 / 208-230 / 60	1 / 208-230 / 60	1 / 208-230 / 60	1 / 208-230 / 60	1 / 208-230 / 60	1 / 208-230 / 60
	MAX. BREAKER	See Outdoor Unit	See Outdoor Unit	See Outdoor Unit	See Outdoor Unit	See Outdoor Unit	See Outdoor Unit
UNIT DIMENSIONS	WIDTH	32 5/16 in.	32 5/16 in.	32 5/16 in.	41 9/16 in.	41 9/16 in.	41 9/16 in.
	HEIGHT	13 9/16 in.	13 9/16 in.	13 9/16 in.	13 9/16 in.	13 9/16 in.	13 9/16 in.
	DEPTH	8 7/16 in.	8 7/16 in.	8 7/16 in.	8 7/16 in.	8 7/16 in.	8 7/16 in.
	WEIGHT	20.1 lbs.	20.1 lbs.	20.1 lbs.	23.4 lbs.	25.4 lbs.	25.4 lbs.
PIPE CONNECTIONS	HIGH SIDE / LOW SIDE	1/4 in. x 3/8 in.	1/4 in. x 3/8 in.	1/4 in. x 3/8 in.	1/4 in. x 1/2 in.	1/4 in. x 1/2 in.	1/4 in. x 5/8 in.
EVAPORATOR FAN	COOLING CFM (L / M / H	309 / 322 / 336 / 350	340 / 368 / 382 / 396	309 / 337 / 364 / 378	401 / 435 / 469 / 486	401 / 435 / 469 / 486	465 / 525 / 584 / 623
	HEATING CFM (L / M / H / T)	340 / 354 / 368 / 381	340 / 368 / 382 / 396	343 / 371 / 399 / 413	465 / 525 / 584 / 623	465 / 525 / 584 / 623	470 / 529 / 589 / 629
ACCESSORIES	WIRELESS CONTROLLER	INCLUDED	INCLUDED	INCLUDED	INCLUDED	INCLUDED	INCLUDED

10- Year Warranty logo - Product registration required. Conditions apply. AHRI Certified (Globally Recognized. Industry Respected.) Logo - The AHRI Certified® mark indicates Samsung's participation in the AHRI Certification program. For verification of individual certified products, go to www.ahridirectory.org. Proper sizing and installation of equipment is critical to achieve performance. Split system air conditioners and heat pumps (excluding ductless systems) must be matched with appropriate coil components to meet ENERGY STAR® criteria. Ask your contractor for details or visit www.energystar.gov. Samsung HVAC maintains a policy of ongoing development, specifications are subject to change without notice. *The WindFree™ unit delivers an air current that is under 0.15 m/s while in WindFree™ mode. Air velocity that is below 0.15 m/s is considered "still air" as defined by ASHRAE 55-2013 (American Society of Heating, Refrigerating, and Air-Conditioning Engineers).

SAMSUNG LIGHT COMMERCIAL SYSTEMS

SAMSUNG

LIGHT COMMERCIAL SINGLE Zone Systems



FJM DUCT S

US CODE	INDOOR UNIT	JNH09HDB	JNH12HDB	JNH15HDB	JNH18LDT
MODEL NUMBER	INDOOR UNIT	AJ009BNHDCH/AA	AJ012BNHDCH/AA	AJ015BNHDCH/AA	AJ018BNHDCH/AA
PERFORMANCE	COOLING CAPACITY	9,000 Btu/h	12,000 Btu/h	15,000 Btu/h	18,000 Btu/h
	HEATING CAPACITY	12,000 Btu/h	14,000 Btu/h	18,000 Btu/h	21,000 Btu/h
POWER	VOLT / PHASE / Hz	1 / 208-230 / 60	1 / 208-230 / 60	1 / 208-230 / 60	1 / 208-230 / 60
UNIT DIMENSIONS	WIDTH	33 7/16 in.	33 7/16 in.	33 7/16 in.	33 7/16 in.
	HEIGHT	9 13/16 in.	9 13/16 in.	9 13/16 in.	9 13/16 in.
	DEPTH	27 9/16 in.	27 9/16 in.	27 9/16 in.	27 9/16 in.
	WEIGHT	58.9 lbs.	58.9 lbs.	58.9 lbs.	58.9 lbs.
PIPE CONNECTIONS	HIGH SIDE / LOW SIDE	1/4 in. / 3/8 in.	1/4 in. / 3/8 in.	1/4 in. / 1/2 in.	1/4 in. / 1/2 in.
	DRAIN	1 1/4 in. OD, 1 in. ID	1 1/4 in. OD, 1 in. ID	1 1/4 in. OD, 1 in. ID	1 1/4 in. OD, 1 in. ID
EVAPORATOR FAN	CFM (L / M / H)	243 / 258 / 297	258 / 314 / 399	307 / 374 / 441	346 / 417 / 502
	STATIC PRESSURE (STANDA	0.18 in. WC	0.18 in. WC	0.18 in. WC	0.18 in. WC
	STATIC PRESSURE (MIN./MA	0.10 / 0.59 in. WC	0.10 / 0.59 in. WC	0.10 / 0.59 in. WC	0.10 / 0.59 in. WC

10- Year Warranty logo - Product registration required. Conditions apply. AHRI Certified (Globally Recognized. Industry Respected.) Logo - The AHRI Certified® mark indicates Samsung's participation in the AHRI Certification program. For verification of individual certified products, go to www.ahridirectory.org. Proper sizing and installation of equipment is critical to achieve performance.



FJM SLIM DUCT

US CODE	INDOOR UNIT	CNH09LDB	CNH12LDB	CNH18LDB
MODEL NUMBER	INDOOR UNIT	AC009BNLDCH/AA	AC012BNLDCH/AA	AC018BNLDCH/AA
PERFORMANCE	COOLING CAPACITY	9,000 Btu/h	12,000 Btu/h	18,000 Btu/h
	HEATING CAPACITY	12,000 Btu/h	14,000 Btu/h	20,000 Btu/h
POWER	VOLT / PHASE / Hz	1 / 208-230 / 60	1 / 208-230 / 60	1 / 208-230 / 60
UNIT DIMENSIONS	WIDTH	35 7/16 in.	35 7/16 in.	43 5/16 in.
	HEIGHT	7 13/16 in.	7 13/16 in.	7 13/16 in.
	DEPTH	15 3/4 in.	15 3/4 in.	15 3/4 in.
	WEIGHT	41.7 lbs.	41.7 lbs.	49.4 lbs.
PIPE CONNECTIONS	HIGH SIDE / LOW SIDE	1/4 in. / 3/8 in.	1/4 in. / 3/8 in.	1/4 in. / 1/2 in.
	DRAIN	1 1/4 in. OD, 1 in. ID	1 1/4 in. OD, 1 in. ID	1 1/4 in. OD, 1 in. ID
EVAPORATOR FAN	CFM (L / M / H)	194 / 230 / 283	300 / 353 / 399	353 / 459 / 600
	STATIC PRESSURE (STANDA	0.1 in. WC	0.1 in. WC	0.1 in. WC
	STATIC PRESSURE (MIN./MA	0.0 / 0.24 in. WC	0.0 / 0.24 in. WC	0.0 / 0.24 in. WC

10- Year Warranty logo - Product registration required. Conditions apply. AHRI Certified (Globally Recognized. Industry Respected.) Logo - The AHRI Certified® mark indicates Samsung's participation in the AHRI Certification program. For verification of individual certified products, go to www.ahridirectory.org. Proper sizing and installation of equipment is critical to achieve performance.

SAMSUNG LIGHT COMMERCIAL SYSTEMS

SAMSUNG

LIGHT COMMERCIAL SINGLE Zone Systems

FJM MULTIPOSITION AIR HANDLER



MODEL NUMBER	INDOOR UNIT	AC012BNZDCH/AA	AC018BNZDCH/AA	AC024BNZDCH/AA
PERFORMANCE	COOLING CAPACITY	12,000 Btu/h	18,000 Btu/h	24,000 Btu/h
	HEATING CAPACITY	13,500 Btu/h	20,000 Btu/h	27,000 Btu/h
POWER	VOLT / PHASE / Hz	1 / 208-230 / 60	1 / 208-230 / 60	1 / 208-230 / 60
UNIT DIMENSIONS	WIDTH	17 1/2 in.	17 1/2 in.	17 1/2 in.
	HEIGHT	43 in.	43 in.	43 in.
	DEPTH	21 3/4 in.	21 3/4 in.	21 3/4 in.
	WEIGHT	95.9 lbs.	98.1 lbs.	98.1 lbs.
PIPE CONNECTIONS	HIGH SIDE / LOW SIDE	1/4 in. / 3/8 in.	1/4 in. / 1/2 in.	1/4 in. / 1/2 in.
	DRAIN	3/4" FNPT	3/4" FNPT	3/4" FNPT
EVAPORATOR FAN	CFM (L / M / H)	244 / 286 / 374	494 / 530 / 600	547 / 636 / 759
	STATIC PRESSURE (STANDA	0.4 in. WC	0.58 in. WC	0.58 in. WC
	STATIC PRESSURE (MIN./MA	0.10 / 0.50 in. WC	0 / 0.80 in. WC	0 / 0.80 in. WC

[1] Minimum and maximum capacity will vary based on connected indoor unit capacity and type.10- Year Warranty logo - Product registration required. Conditions apply. AHRI Certified (Globally Recognized. Industry Respected.) Logo - The AHRI Certified® mark indicates Samsung's participation in the AHRI Certification program. For verification of individual certified products, go to www.ahridirectory.org. Proper sizing and installation of equipment is critical to achieve performance. Select Models are ENERGY STAR® labeled. Proper sizing and installation of equipment is critical to achieve performance. Split system air conditioners and heat pumps (excluding ductless systems) must be matched with appropriate coil components to meet ENERGY STAR® criteria. Ask your contractor for details or visit www.energystar.gov.

SAMSUNG LIGHT COMMERCIAL SYSTEMS

SAMSUNG

LIGHT COMMERCIAL SINGLE Zone Systems

FJM JOINT MULTI MAX HEAT

US CODE	OUTDOOR UNIT	JXH20S3B	JXH24S4B	JXH30S4B	JXH36S4B
MODEL NUMBER	OUTDOOR UNIT	AJ020BXS3CH/AA	AJ024BXS4CH/AA	AJ030BXS4CH/AA	AJ036BXS4CH/AA
IDU CONNECTION	QUANTITY	2 - 3	2 - 4	2 - 4	2 - 4
PERFORMANCE	COOLING CAPACITY (STANDARD / MAX.)1	21,000 / 21,000 Btu/h	25,000 / 25,000 Btu/h	28,400 / 28,400 Btu/h	34,000 / 39,600 Btu/h
	MIN. COOLING CAPACITY	5,500 Btu/h	6,500 Btu/h	6,500 Btu/h	6,500 Btu/h
	HEATING CAPACITY (STANDARD / MAX.)1	22,000 / 22,000 Btu/h	25,000 / 25,000 Btu/h	28,600 / 28,600 Btu/h	36,600 / 36,600 Btu/h
	MIN. HEATING CAPACITY	7,500 Btu/h	7,500 Btu/h	7,500 Btu/h	7,500 Btu/h
	MAX. HEATING CAPACITY AT 5°F (-15.0°	22,000 Btu/h	25,000 Btu/h	28,600 Btu/h	36,600 Btu/h
	MAX. HEATING CAPACITY AT -13°F (-25.	15,380 Btu/h	17,480 Btu/h	20,000 Btu/h	25,590 Btu/h
	SEER (DUCTED / MIXED / NON-DUCTED	15.50 / 16.75 / 18.00	16.00 / 17.50 / 19.00	17.00 / 18.00 / 19.00	18.00 / 19.00 / 20.00
	EER (DUCTED / MIXED / NON-DUCTED)	11.40 / 12.45 / 13.50	10.60 / 11.80 / 13.00	10.50 / 11.50 / 12.50	11.00 / 11.75 / 12.50
	HSPF (DUCTED / MIXED / NON-DUCTED	9.50 / 9.75 / 10.00	9.50 / 9.75 / 10.00	9.80 / 10.40 / 11.00	9.10 / 9.80 / 10.50
POWER	VOLT / PHASE / Hz	1 / 208-230 / 60	1 / 208-230 / 60	1 / 208-230 / 60	1 / 208-230 / 60
	MAX. BREAKER	30.0 A	30.0 A	30.0 A	40.0 A
	MCA	25.5 A	26.0 A	26.0 A	36.5 A
UNIT DIMENSIONS	WIDTH	37 in.	37 in.	37 in.	37 in.
	HEIGHT	39 5/16 in.	39 5/16 in.	39 5/16 in.	47 5/8 in.
	DEPTH	13 in.	13 in.	13 in.	13 in.
	WEIGHT	170.9 lbs.	173.1 lbs.	173.1 lbs.	192.9 lbs.
OPERATING TEMPERATURE (°F)	COOLING	14 - 114.8°F	14 - 114.8°F	14 - 114.8°F	14 - 114.8°F
	HEATING	-13 - 75°F	-13 - 75°F	-13 - 75°F	-13 - 75°F
OPERATING TEMPERATURE (°C)	COOLING	-10.0 - 46.0°C	-10.0 - 46.0°C	-10.0 - 46.0°C	-10.0 - 46.0°C
	HEATING	-25.0 - 24.0°C	-25.0 - 24.0°C	-25.0 - 24.0°C	-25.0 - 24.0°C
PIPE CONNECTIONS	HIGH SIDE	1/4" X 3	1/4" X 4	1/4" X 4	1/4" X 4
	LOW SIDE	3/8" X 3	3/8" X 2 + 1/2" X 2	3/8" X 2 + 1/2" X 2	3/8" X 2 + 1/2" X 2
	INCLUDED PIPE ADAPTERS	1 - 3/8" X 1/2"	2 - 1/2" X 3/8"	2 - 1/2" X 3/8"	2 - 1/2" X 3/8", 2 - 1/2" X 5/8"
	MAX. INDIVIDUAL LENGTH	82 ft.	82 ft.	82 ft.	82 ft.
	MAX. TOTAL LENGTH	164 ft.	230 ft.	230 ft.	230 ft.
	MAX. VERTICAL (ODU TO IDU)	49 ft.	49 ft.	49 ft.	49 ft.
	MAX. VERTICAL (IDU TO IDU)	25 ft.	25 ft.	25 ft.	25 ft.
REFRIGERANT	R410A CHARGE	119.9 oz.	119.9 oz.	119.9 oz.	127.0 oz.
	CHARGED FOR	131 ft.	131 ft.	131 ft.	164 ft.
CONDENSER FAN	CFM (MAX.)	2,493	2,493	2,493	3,885
CERTIFICATIONS	ENERGY STAR® CERTIFIED	Non-Ducted Indoor Units Only	Non-Ducted Indoor Units Only	Non-Ducted Indoor Units Only	Non-Ducted Indoor Units Only

SAMSUNG LIGHT COMMERCIAL SYSTEMS

SAMSUNG

LIGHT COMMERCIAL SINGLE Zone Systems

WindFree™* 4-Way Cassette Max Heat®

SPECIFICATIONS - 30,000 | 36,000

US CODE	INDOOR UNIT	CNH304DN	CNH364DN
	OUTDOOR UNIT	CXC30SCJ	CXC36SCJ
MODEL NUMBER	INDOOR UNIT	AC030NN4DCH/AA	AC036NN4DCH/AA
	OUTDOOR UNIT	AC030JXSCCH/AA	AC036JXSCCH/AA
PERFORMANCE	COOLING CAPACITY	30,000 Btu/h	36,000 Btu/h
	COOLING RANGE	13,000 - 36,000 Btu/h	14,000 - 42,000 Btu/h
	HEATING CAPACITY	32,000 Btu/h	40,000 Btu/h
	HEATING RANGE	11,000 - 39,000 Btu/h	12,000 - 48,000 Btu/h
	SEER / EER	21.0 / 13.1	20.0 / 12.9
	COP	3.84	3.64
	HSPF	10.1	10.4
POWER	VOLT/ PHASE/ Hz	208-230 / 1 / 60	208-230 / 1 / 60
	MAX. BREAKER	45 A	45 A
	MCA	26.31 A	26.31 A
INDOOR UNIT DIMENSIONS	WIDTH	33 1/16 in.	33 1/16 in.
	HEIGHT	11 3/8 in.	11 3/8 in.
	DEPTH	33 1/16 in.	33 1/16 in.
	WEIGHT	40.79 lbs.	40.79 lbs.
OUTDOOR UNIT DIMENSIONS	WIDTH	37 in.	37 in.
	HEIGHT	55 7/8 in.	55 7/8 in.
	DEPTH	13 in.	13 in.
	WEIGHT	211.64 lbs.	211.64 lbs.
OPERATING TEMPERATURE	COOLING	(-4**) 23 ≤ T ≤ 115°F	(-4**) 23 ≤ T ≤ 115°F
	HEATING	-13 ≤ T ≤ 76°F	-13 ≤ T ≤ 76°F
PIPE CONNECTIONS	HIGH SIDE / LOW SIDE	3/8 in. / 5/8 in.	3/8 in. / 5/8 in.
	MAX. LENGTH	246 ft.	246 ft.
	MAX. VERTICAL	98 ft.	98 ft.
REFRIGERANT	R410A CHARGE	102.24 oz.	102.24 oz.
	CHARGED FOR	25 ft.	25 ft.
EVAPORATOR FAN	CFM (L / M / H / T)	590 / 715 / 840 / -	620 / 840 / 1,020 / -
CONDENSER FAN	CFM (MAX.)	4,415	4,415
CERTIFICATIONS	ENERGY STAR® CERTIFIED	ENERGY STAR	ENERGY STAR



10 YEAR WARRANTY Product Registration Required Conditions Apply

AHRI CERTIFIED® www.ahridirectory.org Globally Recognized. Industry Respected. The AHRI Certified® mark indicates Samsung's participation in the AHRI Certification program. For verification of individual certified products, go to www.ahridirectory.org.

ENERGY STAR Select models are ENERGY STAR® labeled. Proper sizing and installation of equipment is critical to achieve performance. Split system air conditioners and heat pumps (excluding ductless systems) must match with appropriate coil components to meet ENERGY STAR® criteria. Ask your contractor for details or visit www.energystar.gov.

WORKS WITH SmartThings The SmartThings app is available for download on the Google™ Play store and App Store®. A network connection is required. Samsung application account is necessary.

C ETL US LISTED Intertek

SAMSUNG LIGHT COMMERCIAL SYSTEMS

SAMSUNG

LIGHT COMMERCIAL SINGLE Zone Systems



360 Cassette

SPECIFICATIONS - 18,000 | 24,000 | 30,000 | 36,000 | 42,000 | 48,000

US CODE	INDOOR UNIT	CNH184DK	CNH244DK	CNH304DK	CNH364DK	CNH424DK	CNH484DK
	OUTDOOR UNIT	CXH18ADJ	CXH24ADJ	CXH30ADJ	CXH36ADJ	CXH42ADJ	CXH48ADJ
MODEL NUMBERS	INDOOR UNIT	AC018KN4DCH/AA	AC024KN4DCH/AA	AC030KN4DCH/AA	AC036KN4DCH/AA	AC042KN4DCH/AA	AC048KN4DCH/AA
	OUTDOOR UNIT	AC018JXADCH/AA	AC024JXADCH/AA	AC030JXADCH/AA	AC036JXADCH/AA	AC042JXADCH/AA	AC048JXADCH/AA
PERFORMANCE	COOLING CAPACITY	18,000 Btu/h	24,000 Btu/h	30,000 Btu/h	36,000 Btu/h	42,000 Btu/h	48,000 Btu/h
	COOLING RANGE	5,000 - 21,000 Btu/h	7,000 - 27,000 Btu/h	9,300 - 35,000 Btu/h	14,000 - 41,000 Btu/h	16,300 - 45,000 Btu/h	18,600 - 51,000 Btu/h
	HEATING CAPACITY	20,000 Btu/h	27,000 Btu/h	32,000 Btu/h	40,000 Btu/h	47,000 Btu/h	53,000 Btu/h
	HEATING RANGE	3,800 - 25,000 Btu/h	5,200 - 31,000 Btu/h	9,000 - 38,000 Btu/h	11,500 - 48,000 Btu/h	13,400 - 50,000 Btu/h	15,300 - 55,000 Btu/h
	SEER / EER	20.10 / 11.40	20.50 / 11.10	19.20 / 10.40	20.70 / 12.00	19.70 / 10.00	19.00 / 8.90
	COP	3.66	3.20	3.06	3.40	3.04	3.02
	HSPF	10.0	10.0	9.9	9.7	9.5	9.5
POWER	VOLT/ PHASE/ Hz	208-230 / 1 / 60	208-230 / 1 / 60	208-230 / 1 / 60	208-230 / 1 / 60	208-230 / 1 / 60	208-230 / 1 / 60
	MAX. BREAKER	15 A	20 A	30 A	35 A	35 A	35 A
	MCA	8.1 A	12.06 A	19.7 A	22.08 A	22.08 A	22.08 A
INDOOR UNIT DIMENSIONS	WIDTH	37 1/4 in.	37 1/4 in.	37 1/4 in.	37 1/4 in.	37 1/4 in.	37 1/4 in.
	HEIGHT	11 in.	11 in.	14 3/8 in.	14 3/8 in.	14 3/8 in.	14 3/8 in.
	DEPTH	37 1/4 in.	37 1/4 in.	37 1/4 in.	37 1/4 in.	37 1/4 in.	37 1/4 in.
	WEIGHT	46.30 lbs.	46.30 lbs.	52.91 lbs.	52.91 lbs.	52.91 lbs.	52.91 lbs.
OUTDOOR UNIT DIMENSIONS	WIDTH	34 5/8 in.	37 in.	37 in.	37 in.	37 in.	37 in.
	HEIGHT	25 1/8 in.	39 11/16 in.	39 11/16 in.	48 in.	48 in.	48 in.
	DEPTH	12 1/4 in.	13 in.	13 in.	13 in.	13 in.	13 in.
	WEIGHT	99.00 lbs.	142.00 lbs.	154.00 lbs.	194.00 lbs.	194.00 lbs.	194.00 lbs.
OPERATING TEMPERATURE	COOLING	(0*) 23 ≤ T ≤ 115°F	(0*) 23 ≤ T ≤ 115°F	(0*) 23 ≤ T ≤ 115°F	(0*) 23 ≤ T ≤ 115°F	(0*) 23 ≤ T ≤ 115°F	(0*) 23 ≤ T ≤ 115°F
	HEATING	-4 ≤ T ≤ 76°F	-4 ≤ T ≤ 76°F	-4 ≤ T ≤ 76°F	-4 ≤ T ≤ 76°F	-4 ≤ T ≤ 76°F	-4 ≤ T ≤ 76°F
PIPE CONNECTIONS	HIGH SIDE / LOW SIDE	1/4 in. / 1/2 in.	1/4 in. / 5/8 in.	3/8 in. / 5/8 in.	3/8 in. / 5/8 in.	3/8 in. / 5/8 in.	3/8 in. / 5/8 in.
	MAX. LENGTH	98 ft.	164 ft.	164 ft.	246 ft.	246 ft.	246 ft.
	MAX. VERTICAL	66 ft.	98 ft.	98 ft.	98 ft.	98 ft.	98 ft.
REFRIGERANT	R410A CHARGE	45.86 oz.	74.08 oz.	91.71 oz.	98.77 oz.	98.77 oz.	98.77 oz.
	CHARGED FOR	25 ft.	25 ft.	25 ft.	25 ft.	25 ft.	25 ft.
EVAPORATOR FAN	CFM (L / M / H / T)	480 / 547 / 646 / -	480 / 547 / 646 / -	632 / 741 / 904 / -	710 / 943 / 1,179 / -	745 / 981 / 1,218 / -	822 / 1,024 / 1,257 / -
CONDENSER FAN	CFM (MAX.)	1,550	2,190	2,219	3,040	3,040	3,040
CERTIFICATIONS	ENERGY STAR® CERTIFIED	-	-	-	-	-	-

10 YEAR WARRANTY Product Registration Required Conditions Apply

AHRI CERTIFIED® www.ahridirectory.org Globally Recognized. Industry Respected. The AHRI Certified® mark indicates Samsung's participation in the AHRI Certification program. For verification of individual certified products, go to www.ahridirectory.org.

WORKS WITH SmartThings The SmartThings app is available for download on the Google™ Play store and App Store®. A network connection is required. Samsung application account is necessary.

C ETL CM US LISTED Intertek

SAMSUNG LIGHT COMMERCIAL SYSTEMS

SAMSUNG

LIGHT COMMERCIAL SINGLE Zone Systems

Duct S Max Heat®

SPECIFICATIONS - 30,000 | 36,000



US CODE	INDOOR UNIT	CNH30HDM	CNH36HDM
	OUTDOOR UNIT	CXC30SCJ	CXC36SCJ
MODEL NUMBER	INDOOR UNIT	AC030MNHDCH/AA	AC036MNHDCH/AA
	OUTDOOR UNIT	AC030JXSCCH/AA	AC036JXSCCH/AA
PERFORMANCE	COOLING CAPACITY	30,000 Btu/h	36,000 Btu/h
	COOLING RANGE	14,000 - 36,000 Btu/h	14,000 - 42,000 Btu/h
	HEATING CAPACITY	32,000 Btu/h	40,000 Btu/h
	HEATING RANGE	11,500 - 39,000 Btu/h	12,000 - 48,000 Btu/h
	SEER / EER	19.0 / 11.0	20.0 / 12.20
	COP	3.81	3.34
	HSPF	10.1	10.4
POWER	VOLT/ PHASE/ Hz	208-230 / 1 / 60	208-230 / 1 / 60
	MAX. BREAKER	45 A	45 A
	MCA	32 A	32 A
INDOOR UNIT DIMENSIONS	WIDTH	47 1/4 in.	51 3/16 in.
	HEIGHT	9 13/16 in.	11 13/16 in.
	DEPTH	27 9/16 in.	27 9/16 in.
	WEIGHT	89.30 lbs.	99.60 lbs.
OUTDOOR UNIT DIMENSIONS	WIDTH	37 in.	37 in.
	HEIGHT	55 7/8 in.	55 7/8 in.
	DEPTH	13 in.	13 in.
	WEIGHT	211.64 lbs.	211.64 lbs.
OPERATING TEMPERATURE	COOLING	(-4*) 23 ≤ T ≤ 115°F	(-4*) 23 ≤ T ≤ 115°F
	HEATING	-13 ≤ T ≤ 76°F	-13 ≤ T ≤ 76°F
PIPE CONNECTIONS	HIGH SIDE / LOW SIDE	3/8 in. / 5/8 in.	3/8 in. / 5/8 in.
	MAX. LENGTH	246 ft.	246 ft.
	MAX. VERTICAL	98 ft.	98 ft.
REFRIGERANT	R410A CHARGE	102.29 oz.	102.29 oz.
	CHARGED FOR	25 ft.	25 ft.
EVAPORATOR FAN	CFM (L / M / H / T)	671 / 777 / 883 / -	848 / 989 / 1,165 / -
CONDENSER FAN	CFM (MAX.)	4,415	4,415
CERTIFICATIONS	ENERGY STAR® CERTIFIED	-	-

10 YEAR WARRANTY Product Registration Required Conditions Apply

AHRI CERTIFIED The AHRI Certified® mark indicates Samsung's participation in the AHRI Certification program. For verification of individual certified products, go to www.ahridirectory.org.

WORKS WITH SmartThings The SmartThings app is available for download on the Google™ Play store and App Store®. A network connection is required. Samsung application account is necessary.

ETL LISTED Intertek

SAMSUNG LIGHT COMMERCIAL SYSTEMS

SAMSUNG

LIGHT COMMERCIAL SINGLE Zone Systems



Multi-Position Air Handler

SPECIFICATIONS - 36,000 | 42,000 | 48,000 | 54,000

US CODE	INDOOR UNIT	CNH36ZDK	CNH42ZDK	CNH48ZDK	CNH54ZDK
	OUTDOOR UNIT	CXH36ADJ	CXH42ADJ	CXH48ADJ	CXH54ADK
MODEL NUMBER	INDOOR UNIT	AC036KNZDCH/AA	AC042KNZDCH/AA	AC048KNZDCH/AA	AC054KNZDCH/AA
	OUTDOOR UNIT	AC036JXADCH/AA	AC042JXADCH/AA	AC048JXADCH/AA	AC054JXADCH/AA
PERFORMANCE	COOLING CAPACITY	36,000 Btu/h	42,000 Btu/h	48,000 Btu/h	54,000 Btu/h
	COOLING RANGE	14,000 - 39,000 Btu/h	17,000 - 44,000 Btu/h	19,000 - 50,000 Btu/h	21,000 - 55,000 Btu/h
	HEATING CAPACITY	40,000 Btu/h	47,000 Btu/h	53,000 Btu/h	60,000 Btu/h
	HEATING RANGE	12,000 - 43,000 Btu/h	14,000 - 49,000 Btu/h	16,000 - 55,000 Btu/h	21,000 - 62,000 Btu/h
	SEER / EER	19.00 / 11.40	18.40 / 10.15	18.00 / 9.60	17.10 / 8.05
	COP	3.24	3.26	3.14	3.03
	HSPF	10.2	9.6	9.7	9
POWER	VOLT/ PHASE/ Hz	208-230 / 1 / 6	208-230 / 1 / 60	208-230 / 1 / 60	208-230 / 1 / 60
	MAX. BREAKER	40 A	40 A	40 A	70 A
	MCA	26.36 A	26.36 A	26.36 A	41.64 A
INDOOR UNIT DIMENSIONS	WIDTH	21 in.	24 1/2 in.	24 1/2 in.	24 1/2 in.
	HEIGHT	48 in.	58 3/4 in.	58 3/4 in.	58 3/4 in.
	DEPTH	21 in.	21 3/4 in.	21 3/4 in.	21 3/4 in.
	WEIGHT	123.46 lbs.	163.14 lbs.	163.14 lbs.	163.14 lbs.
OUTDOOR UNIT DIMENSIONS	WIDTH	37 in.	37 in.	37 in.	37 in.
	HEIGHT	48 in.	48 in.	48 in.	56 in.
	DEPTH	13 in.	13 in.	13 in.	13 in.
	WEIGHT	194.00 lbs.	194.00 lbs.	194.00 lbs.	211.64 lbs.
OPERATING TEMPERATURE	COOLING	(0*) 23 ≤ T ≤ 115°F	(0*) 23 ≤ T ≤ 115°F	(0*) 23 ≤ T ≤ 115°F	(0*) 23 ≤ T ≤ 115°F
	HEATING	-4 ≤ T ≤ 76°F	-4 ≤ T ≤ 76°F	-4 ≤ T ≤ 76°F	-4 ≤ T ≤ 76°F
PIPE CONNECTIONS	HIGH SIDE / LOW SIDE	3/8 in. / 5/8 in.	3/8 in. / 5/8 in.	3/8 in. / 5/8 in.	3/8 in. / 3/4 in.
	MAX. LENGTH	246 ft.	246 ft.	246 ft.	246 ft.
	MAX. VERTICAL	98 ft.	98 ft.	98 ft.	98 ft.
REFRIGERANT	R410A CHARGE	98.77 oz.	98.77 oz.	98.77 oz.	123.52 oz.
	CHARGED FOR	25 ft.	25 ft.	25 ft.	25 ft.
EVAPORATOR FAN	CFM (L / M / H / T)	883 / 1,042 / 1,165 / -	1,060 / 1,165 / 1,271 / -	1,130 / 1,271 / 1,413 / -	1,342 / 1,501 / 1,890 / -
CONDENSER FAN	CFM (MAX.)	3,040	3,040	3,040	5,160
CERTIFICATIONS	ENERGY STAR® CERTIFIED	-	-	-	-

10 YEAR WARRANTY Product Registration Required Conditions Apply

AHRI CERTIFIED Globally Recognized. Industry Respected. The AHRI Certified® mark indicates Samsung's participation in the AHRI Certification program. For verification of individual certified products, go to www.ahridirectory.org.

WORKS WITH SmartThings The SmartThings app is available for download on the Google™ Play store and App Store®. A network connection is required. Samsung application account is necessary.

C ETL US LISTED Intertek

SAMSUNG LIGHT COMMERCIAL SYSTEMS

SAMSUNG



LIGHT COMMERCIAL SINGLE Zone Systems

-40˚ Low Ambient Cooling System

SPECIFICATIONS - 18,000 | 24,000 | 30,000 | 36,000

US CODE	INDOOR UNIT	CNH18ADM	CNH24ADM	CNH30TDM	CNH36TDM
	OUTDOOR UNIT	CXC18SCM	CXC24SCM	CXC30SCM	CXC36SCM
MODEL NUMBER	INDOOR UNIT	AC018MNADCH/AA	AC024MNADCH/AA	AC030MNTDCH/AA	AC036MNTDCH/AA
	OUTDOOR UNIT	AC018MXSCCC/AA	AC024MXSCCC/AA	AC030MXSCCC/AA	AC036MXSCCC/AA
PERFORMANCE	COOLING CAPACITY	18,000 Btu/h	24,000 Btu/h	30,000 Btu/h	36,000 Btu/h
	COOLING RANGE	4,000 - 20,000 Btu/h	7,000 - 27,000 Btu/h	9,000 - 37,000 Btu/h	10,000 - 38,000 Btu/h
	HEATING CAPACITY	-	-	-	-
	HEATING RANGE	-	-	-	-
	SEER / EER	18.8 / 9.05	18.3 / 10.55	19.7 / 10.20	18.0 / 8.1
	COP	-	-	-	-
	HSPF	-	-	-	-
POWER	VOLT/ PHASE/ Hz	208-230 / 1 / 60	208-230 / 1 / 60	208-230 / 1 / 60	208-230 / 1 / 60
	MAX. BREAKER	15 A	20 A	30 A	30 A
	MCA	13 A	16 A	24 A	24 A
INDOOR UNIT DIMENSIONS	WIDTH	35 1/4 in.	41 15/16 in.	50 3/8 in.	50 3/8 in.
	HEIGHT	10 1/4 in.	11 15/16 in.	13 5/8 in.	13 5/8 in.
	DEPTH	10 1/4 in.	11 5/8 in.	10 in.	10 in.
	WEIGHT	23.81 lbs.	32.19 lbs.	40.57 lbs.	40.57 lbs.
OUTDOOR UNIT DIMENSIONS	WIDTH	34 9/16 in.	34 9/16 in.	37 in.	37 in.
	HEIGHT	25 1/8 in.	31 7/16 in.	39 5/16 in.	39 11/16 in.
	DEPTH	12 3/16 in.	12 3/16 in.	13 in.	13 in.
	WEIGHT	94.36 lbs.	114.64 lbs.	159.61 lbs.	159.61 lbs.
OPERATING TEMPERATURE	INDOOR COOLING	61 ≤ T ≤ 90°F	61 ≤ T ≤ 90°F	61 ≤ T ≤ 90°F	61 ≤ T ≤ 90°F
	OUTDOOR COOLING	(-40*) 23 ≤ T ≤ 115°F	(-40*) 23 ≤ T ≤ 115°F	(-40*) 23 ≤ T ≤ 115°F	(-40*) 23 ≤ T ≤ 115°F
PIPE CONNECTIONS	HIGH SIDE / LOW SIDE	1/4 in. / 1/2 in.	1/4 in. / 5/8 in.	3/8 in. / 5/8 in.	3/8 in. / 5/8 in.
	MAX. LENGTH	98.4 ft.	164 ft.	164 ft.	164 ft.
	MAX. VERTICAL	65.6 ft.	98.4 ft.	98.4 ft.	98.4 ft.
REFRIGERANT	R410A CHARGE	45.92 oz.	70.56 oz.	84.64 oz.	84.64 oz.
	CHARGED FOR	25 ft.	25 ft.	25 ft.	25 ft.
EVAPORATOR FAN	CFM (L / M / H / T)	265 / 336 / 406 / -	410 / 477 / 551 / -	671 / 724 / 777 / -	699 / 752 / 830 / -
CONDENSER FAN	CFM (MAX.)	1,412	1,801	2,754	2,754
CERTIFICATIONS	ENERGY STAR® CERTIFIED	-	-	-	-

AHRI CERTIFIED® www.ahridirectory.org Globally Recognized. Industry Respected.

The AHRI Certified® mark indicates Samsung's participation in the AHRI Certification program. For verification of individual certified products, go to www.ahridirectory.org.

WORKS WITH SmartThings

The SmartThings app is available for download on the Google™ Play store and App Store®. A network connection is required. Samsung application account is necessary.

C ETL CM US LISTED Intertek

SAMSUNG VRF SYSTEMS

SAMSUNG

HVAC. Built brave.

With VRF, the facts speak for themselves.

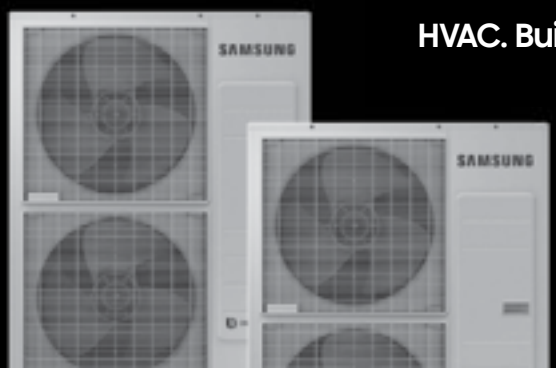

As a residential contractor, you need trustworthy products that really appeal to and benefit homeowners. Say hello to the Samsung DVM S Eco lineup, now featuring Heat Recovery: an extremely flexible, whole home, Variable Refrigerant Flow (VRF) solution that conventional systems simply can't rival.

What is VRF? Variable Refrigerant Flow systems, like mini split systems, utilize advanced digital inverter technology and refrigerant piping to connect the indoor and outdoor unit. However, VRF systems can connect multiple indoor units to a single outdoor unit to create multiple zones. Instead of setting one temperature for the entire house, zoning a home with a VRF system allows homeowners to control the areas where they spend the most time and turn off others to save energy.

It's perfect for homeowners looking to upgrade their current system or when installing an energy-efficient system in new construction. How so? Let's get down to the facts.

1 It's extremely quiet.

The DVM S Eco is definitely the quiet type. This VRF system provides optimal levels of comfort while creating minimal amounts of noise. Furthermore, its quiet operation at night creates a restful environment. Thanks to VRF, homeowners can have peace and quiet at last.

2 It delivers high efficiency.

Eco-conscious? Check. Budget-conscious? Check. Using advanced compressor technology, this VRF system offers exceptional heating and cooling performance at a minimal cost. Exactly what homeowners are looking for? Check.

3 It provides zoned heating and cooling.

The DVM S Eco offers the ultimate zoning solution. With our Heat Pump models, the DVM S Eco allows for precise temperature control in multiple zones, providing comfort to a wide range of occupants.

4 It offers simultaneous heating and cooling.

Heat things up? Cool things down? How about both? With our Heat Recovery models, the DVM S Eco has the ability for individual zones to heat and cool simultaneously. Meaning one room can be cooled while another is heated. Just another advantage of this VRF-driven system.

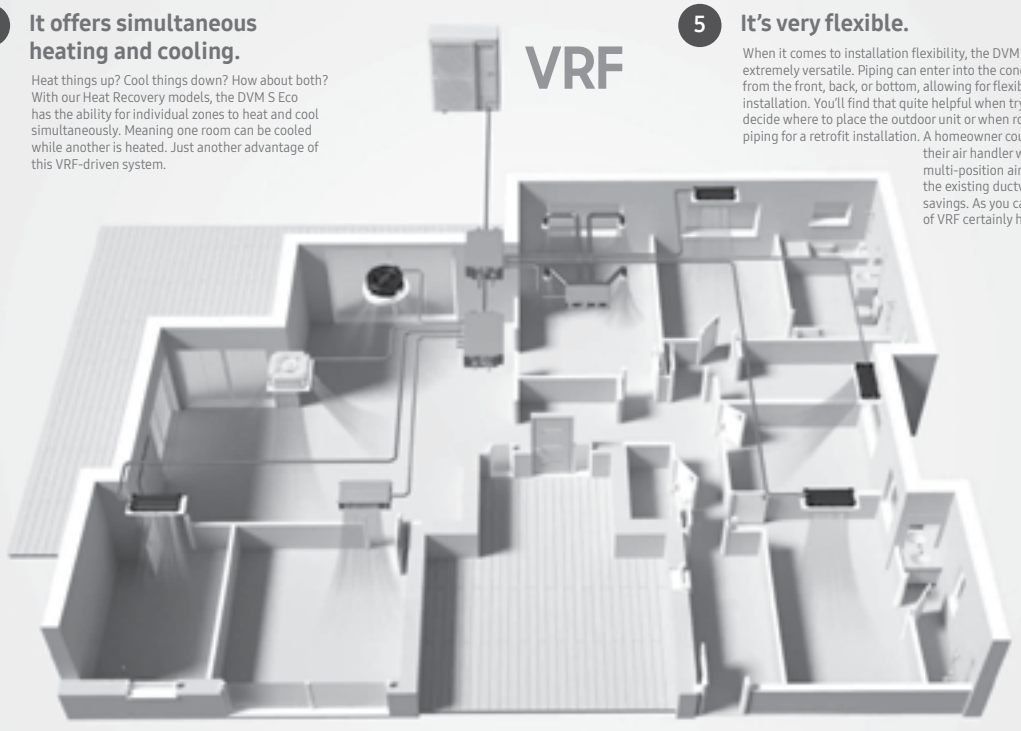

5 It's very flexible.

When it comes to installation flexibility, the DVM S Eco is extremely versatile. Piping can enter into the condenser from the front, back, or bottom, allowing for flexible installation. You'll find that quite helpful when trying to decide where to place the outdoor unit or when routing piping for a retrofit installation. A homeowner could also replace their air handler with a Samsung multi-position air handler and keep the existing ductwork, creating major savings. As you can see, the flexibility of VRF certainly has its benefits.

So give VRF a chance with Samsung. You'll get highly enticing, highly efficient products that fit residential applications. And that's a fact. Check out SamsungHVAC.com to learn even more.

SAMSUNG DVM S ECO SYSTEMS



Small yet versatile.

This compact system is the perfect choice for high efficiency heating and cooling of residential and light commercial needs.

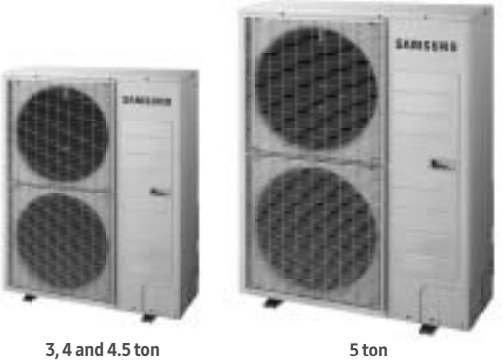

3, 4 and 4.5 ton

5 ton

- Heat Pump and Heat Recovery[1] models
- 208-230V / 60Hz / 1 Ø
- 3, 4, 4.5, and 5 ton single modules
- Connect up to 10 indoor units
  - 3 ton – Up to 8
  - 4 ton – Up to 9
  - 4.5 and 5 ton – Up to 10

Cut costs and space.

DVM S Eco systems offer installation flexibility with maximum piping length up to 492 ft., vertical separation[2] up to 164 ft. between the outdoor unit and lowest indoor unit (when the outdoor unit is above the indoor units) and 131 ft. between the highest and lowest indoor unit (when the outdoor unit is below the indoor units).

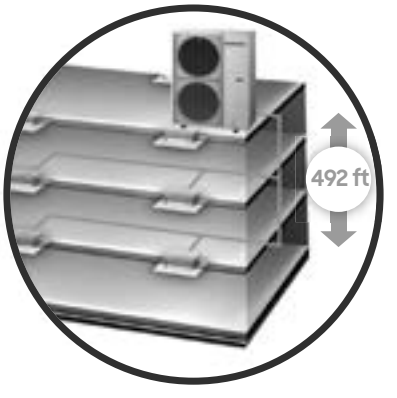

RESIDENTIAL AIR CONDITIONERS

AIREASE



4SCU23LX

AIREASE™

UP TO 23 SEER
VARIABLE CAPACITY AIR CONDITIONER

COMPRESSOR

- Inverter-driven scroll compressor on 5-ton units for true variablecapacity operation, precision environmental control, and exceptional energy savings
- Variable rotary speed compressor on 2-, 3-, and 4-ton units
- R410A refrigerant
- Grommet-mounted compressor for quiet operation
- • Heavy-duty compressor sound blanket for quiet operation
- • Internally protected against high temperature motor overload
- conditions

COMPONENTS

- 45-degree offset gauge ports are positioned for quick installation and easy service
- Variable speed condenser fan motor
- Swept wing fan blade for quiet operation
- Factory installed crankcase heater
- Factory installed high pressure switch
- Thread-on pressure switches for simple, quick service
- Fan orifice for smoother airflow and sound level reduction
- Comfort Sync® enabled for communicating systems
- Specialized sensors monitor ambient, liquid line, suction line, and coil temperatures for precision system control
- Shipped factory charged for 15 feet of line set

WARRANTY

- 5 year limited warranty
- 10 year limited extended warranty on all parts and compressor

**Warranty provides for a total of 10 years of limited warranty coverage (Standard 5-year limited parts warranty plus an additional 5-year limited extended parts warranty). Warranty must be registered online within 60 days of installation to qualify for 10-year coverage. Unregistered equipment defaults to 5-year coverage. Lifetime limited heat exchanger warranty applies to registered equipment only (Standard 20 years with no online registration). See full warranty at www.alliedair.com for terms, conditions and exclusions.*

ENERGY STAR

AHRI CERTIFIED www.ahridirectory.org Unitary Small AC AHRI Standard 210/240

Intertek



PHYSICAL AND ELECTRICAL DATA

Model	Voltage/ Hz/ Phase	Voltage Range	Min. Circuit Amp	Max. Over Current Device (amps)	Compressor		Outdoor Fan Motor			Dimensions (inch)				Sound Rating (dBA) high	Weight (lbs)	LIST
					Rated Load (amps)	Locked Rotor (amps)	Rated Load (amps)	Rated HP	Nom. RPM	A-Width	B-Depth	C-Height				
4SCU23LX124P-ALD	208-230/60/1	197-253	12.6	20	8.0	14	2.6	1/3	Var. Spd.	37.75	35.75	37.50	62	71	230	
4SCU23LX136P-ALD	208-230/60/1	197-253	19.2	30	13.3	14				37.75	35.75	37.50	62	75	230	
4SCU23LX148P-ALD	208-230/60/1	197-253	23.6	40	16.8	23				37.75	35.75	43.75	65	76	300	
4SCU23LX160P-ALD	208-230/60/1	197-253	27.4	45	19.8	23				37.75	35.75	43.75	65	76	300	

Note: Weights listed are unit weights with packaging

RESIDENTIAL AIR CONDITIONERS

AIREASE



4SCU17LE

SPLIT SYSTEM AIR CONDITIONER
UP TO 17 SEER

COMPRESSOR

- High-efficiency scroll compressor
- R410A refrigerant
- Grommet mounted compressor for quietoperation
- Internally protected against high temperature motor overload conditions
- Heavy-duty compressor sound blanket for quiet operation factory installed

COMPONENTS

- 45-degree offset gauge ports for easy service
- Factory installed high and low pressure switches
- Thread-on pressure switches with Schrader core for simple, quick replacement
- Filter drier shipped loose for installation flexibility
- Fan orifice for smoother airflow and sound level reduction
- Charged for 15 feet of line set
- Sealed Contactor with lugs

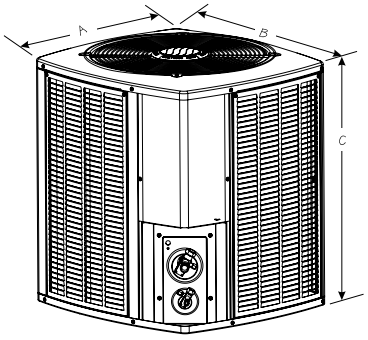

WARRANTY

- 10 year limited warranty on compressor
- 10 year limited warranty on all parts, extended warranty available

**Warranty provides for a total of 10 years of limited warranty coverage (Standard 5-year limited parts warranty plus an additional 5-year limited extended parts warranty). Warranty must be registered online within 60 days of installation to qualify for 10-year coverage. Unregistered equipment defaults to 5-year coverage. Lifetime limited heat exchanger warranty applies to registered equipment only (Standard 20 years with no online registration). See full warranty at www.alliedair.com for terms, conditions and exclusions.*

PHYSICAL AND ELECTRICAL DATA

Model	Voltage/ Hz/ Phase	Voltage Range	Min. Circuit Amp	Max. Over Current Device (amps)	Compressor		Outdoor Fan Motor			Dimensions (inch)			Refrig. Charge (oz.)	Sound Rating (dBA)	Weight (lbs)	LIST
					Rated Load (amps)	Locked Rotor (amps)	Rated Load (amps)	Rated HP	Nom. RPM	A-Width	B-Depth	C-Height				
4SCU17LE118P-ALD	208-230/60/1	197-253	12.0	15	8.8	42.6	1.0	1/6	825	29.38	31.25	29.75	72	68	170	
4SCU17LE124P-ALD	208-230/60/1	197-253	15.4	20	11.7	59.5	0.7	1/8	1075	29.38	31.25	37.75	82	67	190	
4SCU17LE130P-ALD	208-230/60/1	197-253	18.4	25	14.1	71.3	0.7	1/8	1075	29.38	31.25	29.75	104	64	190	
4SCU17LE136P-ALD	208-230/60/1	197-253	17.4	30	13.1	83.1	1.0	1/6	825	29.38	31.25	37.75	136	65	220	
4SCU17LE141P-ALD	208-230/60/1	197-253	21.9	35	15.4	92.1	2.6	1/3	825	35.75	37.75	33.75	140	66	270	
4SCU17LE142P-ALD	208-230/60/1	197-253	24.6	35	18.6	110.0	1.4	1/4	825	35.75	37.75	33.75	146	68	250	
4SCU17LE147P	208-230/60/1	197-253	27.5	35	19.9	110.0	2.6	1/3	825	35.75	37.75	33.75	157	66	270	
4SCU17LE148P-ALD	208-230/60/1	197-253	33.0	50	25.0	120.0	1.7	1/4	825	29.38	31.25	43.75	152	67	260	
4SCU17LE159P	208-230/60/1	197-253	35.5	50	26.3	140.6	2.6	1/3	825	35.75	37.75	43.75	190	65	300	
4SCU17LE160P-ALD	208-230/60/1	197-253	31.3	50	23.9	124.5	1.4	1/4	825	35.75	37.75	43.75	200	67	305	

Note: Weights listed are unit weights with packaging

RESIDENTIAL AIR CONDITIONERS

AIREASE



4SCU16LE

AIREASE™

HIGH EFFICIENCY
SPLIT SYSTEM AIR CONDITIONER
UP TO 15.2 SEER2

COMPRESSOR

- High-efficiency scroll compressor
- R410a refrigerant
- Grommet-mounted compressor for quiet operation
- Internally protected against high temperature motor overload conditions
- Heavy-duty compressor sound blanket for quiet operation

COMPONENTS

- 45-degree offset gauge ports for easy service
- Factory installed high and low pressure switches
- Thread-on pressure switches with Schrader core for simple, quick replacement
- Filter drier shipped loose for installation flexibility
- Fan orifice for smoother airflow and sound level reduction

WARRANTY

- 10 year limited warranty on compressor
- 10 year limited warranty on all parts, extended warranty available

**Warranty provides for a total of 10 years of limited warranty coverage (Standard 5-year limited parts warranty plus an additional 5-year limited extended parts warranty). Warranty must be registered online within 60 days of installation to qualify for 10-year coverage. Unregistered equipment defaults to 5-year coverage. Lifetime limited heat exchanger warranty applies to registered equipment only (Standard 20 years with no online registration). See full warranty at www.alliedair.com for terms, conditions and exclusions.*

OMNIGUARD

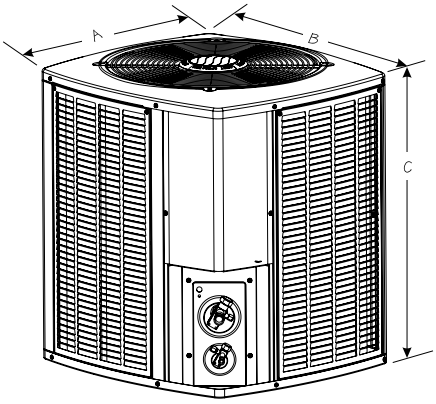

PHYSICAL AND ELECTRICAL DATA

Model	Voltage/ Hz/ Phase	Voltage Range	Min. Circuit Amp	Max. Over Current Device (amps)	Compressor		Outdoor Fan Motor			Dimensions (inch)			Refrig. Charge (oz.)	Sound Rating (dBA)	Weight (lbs)	LIST
					Rated Load (amps)	Locked Rotor (amps)	Rated Load (amps)	Rated HP	Nom. RPM	A-Width	B-Depth	C-Height				
4SCU16LE118P-ALD	208-230/60/1	197-253	11.9	20	9	48	0.7	1/10	1075	24.75	26.75	29.75	77	70	155	
4SCU16LE124P-ALD	208-230/60/1	197-253	14.6	25	10.9	52	1	1/6	825	29.38	31.25	29.75	86	77	171	
4SCU20LX148P-ALD	208-230/60/1	197-253	17	25	12.8	63	1	1/6	825	29.38	31.25	37.75	100	75	187	
4SCU16LE136P-ALD	208-230/60/1	197-253	18	30	13.6	79	1	1/6	825	29.38	31.25	37.75	102	78	205	
4SCU16LE142P-ALD	208-230/60/1	197-253	19.3	40	14.7	75	1	1/4	825	29.38	31.25	33.75	160	74	227	
4SCU16LE141P-ALD	208-230/60/1	197-253	23.4	35	17.9	112	1	1/4	825	29.38	31.25	37.75	161	77	234	
4SCU16LE147P-ALD	208-230/60/1	197-253	22.9	45	16.9	94	1.8	1/3	825	29.38	31.25	37.75	179	79	272	
4SCU16LE148P-ALD	208-230/60/1	197-253	24.2	45	18	94	1.7	1/4	825	29.38	31.25	33.75	174	76	255	
4SCU16LE159P-ALD	208-230/60/1	197-253	28.8	50	20.8	127	2.8	1/3	V Spd	35.75	37.75	37.75	178	77	284	
4SCU16LE160P-ALD	208-230/60/1	197-253	29.6	60	22.2	128	1.8	1/3	825	35.75	37.75	37.75	192	78	284	

Note: Weights listed are unit weights with packaging
+ Factory charged for 15 feet of line set. Adjust per installation instructions.

RESIDENTIAL AIR CONDITIONERS

DUCANE



4AC16L

SPLIT SYSTEM
AIR CONDITIONER
UP TO 16 SEER

Ducane™
AIR CONDITIONING AND HEATING

COMPRESSOR

- High-efficiency scroll compressor
- R410A refrigerant
- Internally protected against high temperature motor overload conditions
- Heavy-duty compressor sound blanket for quiet operation (optional accessory)

COMPONENTS

- Factory installed high pressure switch
- Thread-on pressure switches with Schrader core for simple, quick replacement
- Filter drier shipped loose for installation flexibility
- Fan orifice for smoother airflow and sound level reduction
- Charged for 15 feet of line set

WARRANTY

- 10 year limited warranty on compressor
- 10 year limited warranty on all parts, extended warranty available*

**Warranty provides for a total of 10 years of limited warranty coverage (Standard 5-year limited parts warranty plus an additional 5-year limited extended parts warranty). Warranty must be registered online within 60 days of installation to qualify for 10-year coverage. Unregistered equipment defaults to 5-year coverage. See full warranty at www.alliedair.com for terms, conditions and exclusions.*

COILS

- Omniguard™ total corrosion protection technology designed coil
- Enhanced tube-and-fin coil design featuring MHT™ Technology
- Lanced fins for maximum heat transfer
- Every coil factory tested for leakproof construction
- Raised coil prevents debris from impeding airflow

OMNIGUARD

PHYSICAL AND ELECTRICAL DATA

Model	Voltage/Hz/ Phase	Volt-age Range	Min. Cir-cuit Amp	Max. Over Cur-rent Device (amps)	Compressor		Fan Motor			Dimensions (inch)			Sound Rating (dBA)	Weight (lbs)	LIST
					Rated Load (amps)	Locked Rotor (amps)	Rated Load (amps)	Rated HP	Nom. RPM	A-Width	B-Depth	C-Height			
4AC16L18P-ALD	208-230/60/1	197-253	11.9	20	9	48	0.7	1/10	1075	24.25	24.25	29	73	134	
4AC16L24P-ALD	208-230/60/1	197-253	14.6	25	10.9	59	1	1/6	825	28.25	28.25	37	76	154	
4AC16L30P-ALD	208-230/60/1	197-253	17	25	12.8	68	1	1/6	825	28.25	28.25	37	76	169	
4AC16L36P-ALD	208-230/60/1	197-253	18	30	13.6	79	1	1/6	825	28.25	28.25	37	76	181	
4AC16L41P-ALD	208-230/60/1	197-253	19.3	30	14.7	75	1	1/6	825	28.25	28.25	37	74	192	
4AC16L42P-ALD	208-230/60/1	197-253	23.4	40	17.9	112	1	1/6	825	28.25	28.25	37	76	211	
4AC16L47P-ALD	208-230/60/1	197-253	21.9	35	16.1	106	1.8	1/3	825	32.25	32.25	43	80	231	
4AC16L48P-ALD	208-230/60/1	197-253	24.2	40	18	117	1.7	1/4	825	28.25	28.25	37	78	218	
4AC16L59P-ALD	208-230/60/1	197-253	28.2	45	20.8	127	2.8	1/3	V Spd	32.25	32.25	43	77	253	
4AC16L60P-ALD	208-230/60/1	197-253	29.6	50	22.2	128	1.8	1/3	825	32.25	32.25	43	80	226	

RESIDENTIAL HEAT PUMPS

AIREASE

AIREASE™



4SHP22LX

HIGH EFFICIENCY
SPLIT HEAT PUMP SYSTEMUP TO 22 SEER2
& 9 HSPF2

COMPRESSOR

- Inverter-driven compressor for true variable capacity operation, precision environmental control, and exceptional energy savings
- R410A refrigerant
- Grommet-mounted compressor for quiet operation
- Heavy-duty compressor sound blanket for quiet operation
- Internally protected against high temperature motor overload conditions

COMPONENTS

- 45-degree offset gauge ports are positioned for quick installation and easy service
- Variable speed condenser fan motor
- Swept wing fan blade for quiet operation
- Factory-installed crankcase heater
- Factory-installed TXV for excellent refrigeration control
- Factory-installed high and low pressure switches
- Thread-on pressure switches for simple, quick service
- Fan orifice for smoother airflow and sound level reduction
- Comfort Sync® enabled for communicating systems
- Shipped factory charged for 15 feet of line set
- Discharge muffler for quiet operation
- Demand defrost for increased energy efficiency
- Quiet Shift™ capable to reduce noise during defrost

OMNIGUARD

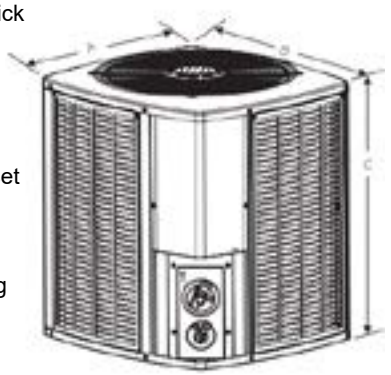

WARRANTY

- 5-year limited warranty
- 10-year limited extended warranty available on all parts and compressor

**Warranty provides for a total of 10 years of limited warranty coverage (Standard 5-year limited parts warranty plus an additional 5-year limited extended parts warranty). Warranty must be registered online within 60 days of installation to qualify for 10-year coverage. Unregistered equipment defaults to 5-year coverage. Lifetime limited heat exchanger warranty applies to registered equipment only (Standard 20 years with no online registration). See full warranty at www.alliedair.com for terms, conditions and exclusions.*

PHYSICAL AND ELECTRICAL DATA

Model	Voltage/ Hz/ Phase	Voltage Range	Min. Circuit Amp	Max. Over Current Device (amps)	Compressor	Outdoor Fan Motor			Dimensions (inch)			Sound Rating (dBA) low	Sound Rating (dBA) high	Weight (lbs)	LIST
					Rated Load (amps) Locked Rotor (amps)	Rated Load (amps)	Rated HP	Nom. RPM	A-Width	B-Depth	C-Height				
4SHP22LX124P-ALD	208-230/60/1	197-253	13.4	20	8.6	2.6	1/3	VAR. SPD	38.88	36.88	38.25	63	71	250	
4SHP22LX136P-ALD	208-230/60/1	197-253	19.9	30	13.9	2.6	1/3	VAR. SPD	38.88	36.88	38.25	61	74	255	
4SHP22LX148P-ALD	208-230/60/1	197-253	24.6	40	17.6	2.6	1/3	VAR. SPD	38.88	36.88	43.75	66	72	358	
4SHP22LX160P-ALD	208-230/60/1	197-253	33.5	50	24.7	2.6	1/3	VAR. SPD	38.88	36.88	43.75	64	77	361	

Note: Weights listed are unit weights with packaging

RESIDENTIAL HEAT PUMPS

AIREASE



4SHP17LE

AIREASE™

HIGH EFFICIENCY
SPLIT SYSTEM HEAT PUMP UP TO 18.2 SEER & 10.6 HSPF UP TO 16.8 SEER2 & 8.5 HSPF2

COMPRESSOR

- High-efficiency scroll compressor
- R410A refrigerant
- Grommet mounted compressor for quiet operation
- Heavy-duty compressor sound blanket for quiet operation
- Internally protected against high temperature motor overload conditions

COMPONENTS

- Factory installed crankcase heater
- Factory installed high and low pressure switches
- Thread-on pressure switches for simple, quick service
- Filter drier shipped loose for installation flexibility
- Fan orifice for smoother airflow and sound level reduction
- Charged for 15 feet of line set
- Discharge muffler for quiet operation
- Quiet Shift™ capable to reduce noise during defrost
- Demand defrost helps eliminate unnecessary defrost cycles
- Sealed Contactor with lugs

OMNIGUARD

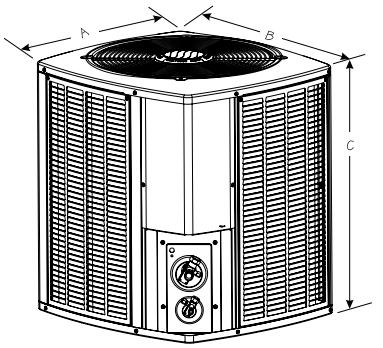

WARRANTY

- 5 year limited warranty on all parts and compressor
- Available 10 year warranty on all parts and compressor with registration*

**Warranty provides for a total of 10 years of limited warranty coverage (Standard 5-year limited parts warranty plus an additional 5-year limited extended parts warranty). Warranty must be registered online within 60 days of installation to qualify for 10-year coverage. Unregistered equipment defaults to 5-year coverage. Lifetime limited heat exchanger warranty applies to registered equipment only (Standard 20 years with no online registration). See full warranty at www.alliedair.com for terms, conditions and exclusions.*

PHYSICAL AND ELECTRICAL DATA

Model	Voltage/Hz/Phase	Voltage Range	Min. Circuit Amp	Max. Over Current Device (amps)	Compressor		Outdoor Fan Motor			Dimensions (inch)			Sound Rating (dBA)	Weight (lbs)	LIST
					Rated Load (amps)	Locked Rotor (amps)	Rated Load (amps)	Rated HP	Nom. RPM	A-Width	B-Depth	C-Height			
4SHP17LE118P-ALD	208-230/60/1	197-253	13.6	20	10.3	45.7	0.7	1/8	825	29.38	31.25	43.75	64	203	
4SHP17LE124P-ALD	208-230/60/1	197-253	15.1	25	11.5	59.5	0.7	1/8	825	29.38	31.25	43.75	63	203	
4SHP17LE130P-ALD	208-230/60/1	197-253	15.6	25	11.7	71.3	1.0	1/6	825	29.38	31.25	33.25	68	205	
4SHP17LE136P-ALD	208-230/60/1	197-253	17.8	30	13.1	83.1	1.4	1/5	825	35.75	37.75	33.25	67	230	
4SHP17LE142P-ALD	208-230/60/1	197-253	25.9	40	18.6	110.0	2.6	1/3	825	35.75	37.75	37.75	65	284	
4SHP17LE148P-ALD	208-230/60/1	197-253	33.9	50	25.0	120.0	2.6	1/3	825	35.75	37.75	37.75	65	284	
4SHP17LE160P-ALD	208-230/60/1	197-253	32.5	50	23.9	124.5	2.6	1/3	825	35.75	37.75	43.75	65	298	

Note: Weights listed are unit weights with packaging
+ Factory charged for 15 feet of line set. Adjust per installation instructions.

DUNCANE

LYNX™ 18 INVERTER HEAT PUMP

4HP18V6

The 4HP18V6 LYNX 18 Inverter Heat Pump is a Smart Replacement Solution Designed to Slash Installation Time, Streamline your Inventory and Delivery Immediate Relief. Driven by Proprietary QuickLink Technology, it Adapts to almost any Existing Indoor System- the Widest Compatibility in its Class. By Pairing Incredibly Quiet, Energy-Efficient Operation with Fast, Hassle-Free Installation and Fewer SKUs to Manage, the LYNX 18 is the Next Evolution in Allied's Promise to Help you make the Right Choice for your Customers, Right now.



COMPONENTS

- 45-degree offset gauge ports are positioned for quick installation and easy service
- Variable speed condenser fan motor
- Swept wing fan blade for quiet operation (5 Ton)
- Factory-installed crankcase heater
- Factory-installed TXV for excellent refrigeration control
- Factory-installed high and low pressure switches
- Thread-on pressure switches for simple, quick service
- Fan orifice for smoother airflow and sound level reduction
- QuickLinkTM technology uses proprietary algorithms and specialized sensors to monitor liquid and suction temperatures and pressures for precision system control in true variable speed operation
- Shipped factory charged for 15 feet of line set
- Discharge muffler for quiet operation
- Demand defrost for increased energy efficiency
- Quiet Shift™ capable to reduce noise during defrost

DIMENSIONS

Model No.	Dimensions (inch)		
	A - Width	B - Depth	C - Height
4HP18V36P-50	29.38	31.25	33.75
4HP18V60P-50	29.38	31.25	43.75

ELECTRICAL AND PHYSICAL DATA

Model	Voltage/Hz/ Phase	Voltage Range	Min. Circuit Amp.	Max. Over Current Device (amps)	Compressor	Outdoor Fan Motor			Shipping Weight (lbs.)
					Input Amps	Full Load (amps)	Rated HP	Nom. RPM	
4HP18V36P-50	208-230/60/1	197-253	21.9	35	15.3	2.8	1/3	VAR. SPD	215
4HP18V60P-50	208-230/60/1	197-253	33.7	50	24.7	2.8	1/3	VAR. SPD	272

RESIDENTIAL HEAT PUMPS

DUCANE



4HP17L

HIGH EFFICIENCY SPLIT SYSTEM
HEAT PUMP UP TO 18.2 SEER & 10.6 HSPF
UP TO 16.8 SEER2 & 8.5 HSPF2

COMPRESSOR

- High-efficiency scroll compressor
- R410A refrigerant
- Grommet mounted compressor for quiet operation
- Internally protected against high temperature motor overload conditions
- Heavy-duty compressor sound blanket for quiet operation (optional accessory)

COMPONENTS

- Factory installed high and low pressure switches
- Thread-on pressure switches with Schrader core for simple, quick replacement
- Factory installed filter drier
- Fan orifice for smoother airflow and sound level reduction
- Charged for 15 feet of line set
- Discharge muffler for quiet operation
- Quiet Shift™ capable to reduce noise during defrost

COILS

- Omniguard™ total corrosion protection technology designed coil
- Enhanced tube-and-fin coil design featuring MHT™ Technology
- Lanced fins for maximum heat transfer
- Factory tested for leakproof construction
- Raised coil prevents debris from impeding airflow

WARRANTY

- 5 year limited warranty on all parts and compressor
- Available 10 year warranty on all parts and compressor with registration*

**Warranty provides for a total of 10 years of limited warranty coverage (Standard 5-year limited parts warranty plus an additional 5-year limited extended parts warranty). Warranty must be registered online within 60 days of installation to qualify for 10-year coverage. Unregistered equipment defaults to 5-year coverage. See full warranty at www.alliedair.com for terms, conditions and exclusions.*

PHYSICAL AND ELECTRICAL DATA

Model	Voltage/Hz/ Phase	Voltage Range	Min. Circuit Amp	Max. Over Current Device (amps)	Compressor		Outdoor Fan Motor			Dimensions (inch)			Sound Rating (dBA)	Weight (lbs)	LIST
					Rated Load (amps)	Locked Rotor (amps)	Rated Load (amps)	Rated HP	Nom. RPM	A-Width	B-Depth	C-Height			
4HP17L18P-ALD	208-230/60/1	197-253	13.6	20	10.3	45.7	0.7	1/8	825	28.25	28.25	43	66	185	
4HP17L24P-ALD	208-230/60/1	197-253	15.1	25	11.5	59.5	0.7	1/8	825	28.25	28.25	43	66	185	
4HP17L30P-ALD	208-230/60/1	197-253	15.6	25	11.7	71.3	1.0	1/6	825	28.25	28.25	33	66	185	
4HP17L36P-ALD	208-230/60/1	197-253	17.8	30	13.1	83.1	1.4	1/5	825	32.25	32.25	33	67	220	
4HP17L42P-ALD	208-230/60/1	197-253	25.9	40	18.6	110.0	2.6	1/3	825	32.25	32.25	38	70	250	
4HP17L48P-ALD	208-230/60/1	197-253	33.9	50	25.0	120.0	2.6	1/3	825	32.25	32.25	38	71	250	
4HP17L60P-ALD	208-230/60/1	197-253	32.5	50	23.9	124.5	2.6	1/3	825	32.25	32.25	43	71	260	

ALLIED AIR

OMNIGUARD™ EVAPORATOR COILS

Features

- Omniguard™ Total Corrosion Protection* our advanced evaporator coil helps protect against leaks and corrosion for long term performance
- Microban® antimicrobial additive in the drain pan to resist mold and mildew growth
- Aluminum tubing, hairpins, distributors and header tubes. Copper refrigerant connections for easy brazing to both liquid and suction lines.
- Preformed flanges in outlet for quick and easy plenum connections
- One of the lowest water retention drain pans in the industry to minimize mold and mildew growth
- Interlocking door assemblies and snug line seal grommets to minimize air leakage
- Foil-face insulation for easy cleaning
- Tubing located at door split for easy coil service or cleaning
- All drain pans are compatible with UV lights
- All piston coils are compatible with R22 or R410a
- 10-year limited parts warranty available when applied with a system. *See limited warranty document for details.*



Upflow Coils

EAC4X (Cased)

- Dedicated upflow
- Factory installed TXV for quick installation in high efficiency applications
- Tightly sealed, painted steel cabinet with wall to wall insulation to ensure <2% air leakage
- Single protruding right side dual drain port for easy installation and service access



EAC1P (Cased)

- Dedicated upflow
- External cabinet mounted distributor body designed for easy changing of orifice sizes and fast TXV connections
- Single protruding right side dual drain port for easy installation and service access



EAU1P (Uncased)

- Dedicated upflow
- Orifice assembly designed for easy changing of orifice sizes and fast TXV connections
- Single protruding right side dual drain port for easy installation and service access

Horizontal Coils



EH1P (Cased)

- Dedicated horizontal
- Insulated galvanized steel case with durable embossed finish
- Removable panels provide access to coil
- Refrigerant lines extend outside of the cabinet for easy connection

Downflow Coils



ED1P (Cased)

- Dedicated downflow
- Heavy-gauge steel constructed cabinet for optimal support of the furnace, no need for additional bracing or structure
- Inlet openings matched to furnace models for easy installation and no adapters needed*
- Removable Cabinet panels for easy coil service
- Single protruding dual drain port for easy installation and service access

RESIDENTIAL FURNACES

AIREASE



A97MV

MODULATING
VARIABLE SPEED GAS FURNACE

AIREASE™

CONFIGURATIONS

- Upflow / Horizontal
- Downflow

HEAT EXCHANGER DESIGN

- 409 stainless steel primary heat exchanger with crimped non-welded construction
- AL29-4C stainless steel secondary heat exchanger

AIR DELIVERY SYSTEM

- ECM variable speed blower motor
- Easily removable slide out blower designexchanger

WARRANTY

- 10 year limited parts warranty / lifetime heat exchanger warranty available. See limited warranty document for details.

VENTING

- Category 4 direct vent appliance (2 pipe only)

INSTALLATION FEATURES

- Left or right utility connections
- Zero step horizontal conversion
- Removable floor base for bottom return air

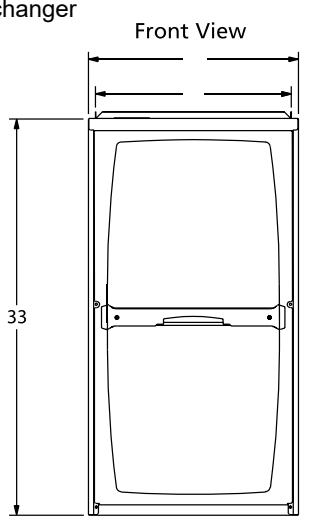

PHYSICAL AND ELECTRICAL DATA

	Model	Input (Btuh)	Output * (Btuh)	AFUE (ICS)	Volts-Hertz-Phase	Dimensions (inch)			LIST
						Width	Depth	Height	
UPFLOW / HORIZONTAL	A97USMV070B12S	66,000	64,000	97.0%	120-60-1	17-1/2	28-1/2	33	
	A97USMV090C12S	88,000	85,000	97.0%	120-60-1	21	28-1/2	33	
	A97USMV090C16S	88,000	85,000	97.0%	120-60-1	21	28-1/2	33	
	A97USMV090C20S	88,000	85,000	97.0%	120-60-1	21	28-1/2	33	
	A97USMV110C20S	110,000	106,000	97.0%	120-60-1	21	28-1/2	33	
	A97USMV135D20S	132,000	127,000	97.0%	120-60-1	24-1/2	28-1/2	33	
DOWNFLOW	A97DSMV070B12S	66,000	64,000	97.0%	120-60-1	17-1/2	28-1/2	33	
	A97DSMV090C16S	88,000	85,000	97.0%	120-60-1	21	28-1/2	33	
	A97DSMV090C20S	88,000	85,000	97.0%	120-60-1	21	28-1/2	33	
	A97DSMV110C20S	110,000	107,000	97.0%	120-60-1	21	28-1/2	33	

Note: For vent length and clearances to combustibles, please reference installation instructions.

AIREASE



A962V

AIREASE™

TWO STAGE VARIABLE SPEED
GAS FURNACE

CONFIGURATIONS

- Upflow / Horizontal
- Downflow

HEAT EXCHANGER DESIGN

- 409 stainless steel primary heat exchanger with crimped non-welded construction
- AL29-4C stainless steel secondary heat exchanger

AIR DELIVERY SYSTEM

- ECM Variable speed blower motor
- Easily removable slide out blower design

VENTING

- Vent materials for Canadian applications must comply with ULC 5636
- Certified for direct vent (2-pipe) and in-direct (1-pipe) applications.

INSTALLATION FEATURES

- Left and right utility connections
- Removable floor base for bottom return air
- All models comply with California's South Coast Air Quality Management district Low NOx requirements
- Zero step horizontal conversion

WARRANTY

- 10 year limited parts warranty / lifetime heat exchanger warranty available. See limited warranty document for details.

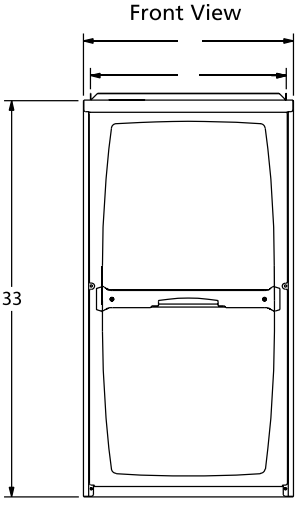

PHYSICAL AND ELECTRICAL DATA

	Model	1st Stage		2nd Stage		AFUE (ICS)	Volts-Hertz-Phase	Dimensions (inch)			LIST
		Input (Btuh)	Output* (Btuh)	Input (Btuh)	Output* (Btuh)			Width	Depth	Height	
UPFLOW / HORIZONTAL	A96US2V045B12S	29,000	28,000	44,000	42,000	96.0	120-60-1	17-1/2	28-1/2	33	
	A96US2V070B12S	43,000	41,000	66,000	62,000	96.0	120-60-1	17-1/2	28-1/2	33	
	A96US2V090C12S	57,000	55,000	88,000	84,000	96.0	120-60-1	21	28-1/2	33	
	A96US2V090C16S	57,000	55,000	88,000	85,000	96.0	120-60-1	21	28-1/2	33	
	A96US2V090C20S	57,000	55,000	88,000	85,000	96.0	120-60-1	21	28-1/2	33	
	A96US2V110C16S	72,000	70,000	110,000	105,000	96.0	120-60-1	21	28-1/2	33	
	A96US2V110C20S	72,000	70,000	110,000	106,000	96.0	120-60-1	21	28-1/2	33	
	A96US2V135D20S	88,000	84,000	132,000	126,000	96.0	120-60-1	24-1/2	28-1/2	33	
DOWNFLOW	A96DS2V045B12S	29,000	28,000	44,000	43,000	96.0	120-60-1	17-1/2	28-1/2	33	
	A96DS2V070B16S	43,000	42,000	66,000	64,000	96.0	120-60-1	17-1/2	28-1/2	33	
	A96DS2V090C20S	57,000	56,000	85,000	85,000	96.0	120-60-1	21	28-1/2	33	
	A96DS2V110C20S	72,000	70,000	110,000	106,000	96.0	120-60-1	21	28-1/2	33	

Note: For vent length and clearances to combustibles, please reference installation instructions.
** Outputs shown are High Fire, 100% rate, Low Fire is 67% of shown output.*

RESIDENTIAL FURNACES

AIREASE



A962E

AIREASE™

TWO STAGE HIGH EFFICIENCY
CONSTANT TORQUE GAS FURNACE

CONFIGURATIONS

- Upflow / Horizontal • Downflow

HEAT EXCHANGER DESIGN

- 409 stainless steel primary heat exchanger with crimped non-welded construction
- AL29-4C stainless steel secondary heat exchanger

BURNERS

- Aluminized steel in shot burners for smooth ignition
- Isolated burner enclosure for quiet operation

AIR DELIVERY SYSTEM

- Constant torque ECM
- Efficient blower motor
- Easily removable slide-out blower design
- Dynamically balanced blower wheel with resilient motor mounts for smooth and quiet operation

WARRANTY

- 10 year limited parts warranty / lifetime heat exchanger warranty available. See limited warranty document for details.

VENTING

- 2-speed induced draft motor with stainless steel shaft, steel ball bearings, and fan cooled for long life
- Vent materials for Canadian applications must comply with ULC S636
- Certified for direct vent and indirect vent (1 and 2 pipe) applications

INSTALLATION FEATURES

- Left or right utility connections
- Zero step horizontal conversion
- Removable floor base (upflow/horizontal units) for bottom return air
- All models comply with California's South Coast Air Quality Management district Low NOx requirements

Front View

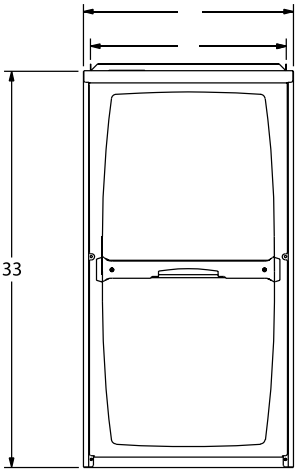

PHYSICAL AND ELECTRICAL DATA

	Model	1st Stage		2nd Stage		AFUE (ICS)	Volts-Hertz-Phase	Dimensions (inch)			LIST
		Input (Btuh)	Out-put* (Btuh)	Input (Btuh)	Out-put* (Btuh)			Width	Depth	Height	
UPFLOW / HORIZON-TAL	A96UH2E030B08S	20,000	19,000	30,000	29,000	96.0	120-60-1	17-1/2	28-1/2	33	
	A96UH2E045B12S	29,000	28,000	44,000	42,000	96.0	120-60-1	17-1/2	28-1/2	33	
	A96UH2E070B12S	43,000	41,000	66,000	62,000	96.0	120-60-1	17-1/2	28-1/2	33	
	A96UH2E090C16S	57,000	55,000	88,000	85,000	96.0	120-60-1	21	28-1/2	33	
	A96UH2E110C20S	72,000	70,000	110,000	105,000	96.0	120-60-1	21	28-1/2	33	
DOWNFLOW	A96DF2E045B12S	29,000	28,000	44,000	43,000	96.0	120-60-1	17-1/2	28-1/2	33	
	A96DF2E070B16S	43,000	42,000	66,000	64,000	96.0	120-60-1	17-1/2	28-1/2	33	
	A96DF2E090C16S	57,000	56,000	88,000	85,000	96.0	120-60-1	21	28-1/2	33	
	A96DF2E110C20S	72,000	70,000	110,000	106,000	96.0	120-60-1	21	28-1/2	33	

Note: For vent length and clearances to combustibles, please reference installation instructions.

AIREASE



A951E

AIREASE™

SINGLE STAGE HIGH EFFICIENCY
CONSTANT TORQUE GAS FURNACE

CONFIGURATIONS

- Upflow / Horizontal • Downflow

HEAT EXCHANGER DESIGN

- 409 stainless steel primary heat exchanger with crimped non-welded construction
- AL29-4C stainless steel secondary heat exchanger

AIR DELIVERY SYSTEM

- Multi-speed high efficiency (constant torque) blower motor
- Easily removable slide out blower design
- Enhanced cooling SEER ratings when applied with properly matched cooling equipment.

BURNERS

- Aluminized steel in shot burners for smooth ignition

VENTING

- Designed certified for direct (2-pipe) and non direct (1-pipe) applications
- Easily vented with PVC pipe

INSTALLATION FEATURES

- Left or right utility connections
- Zero step horizontal conversion
- Removable floor base (upflow/horizontal units) for bottom return air
- All models comply with California's South Coast Air Quality Management district Low NOx requirements

WARRANTY

- 10 year limited parts warranty / lifetime heat exchanger warranty available. See limited warranty document for details.

Front View

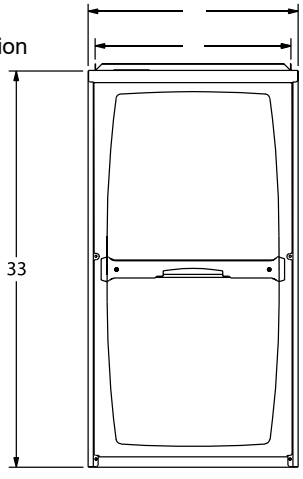

PHYSICAL AND ELECTRICAL DATA

	Model	Input (Btuh)	Output * (Btuh)	AFUE (ICS)	Volts-Hertz-Phase	Dimensions (inch)			LIST
						Width	Depth	Height	
UPFLOW / HORIZONTAL	A95UH1E030B08S	30,000	28,000	95.0%	120-60-1	17-1/2	28-1/2	33	
	A95UH1E045B12S	44,000	42,000	95.0%	120-60-1	17-1/2	28-1/2	33	
	A95UH1E070B12S	64,000	64,000	95.0%	120-60-1	17-1/2	28-1/2	33	
	A95UH1E090C16S	88,000	85,000	95.0%	120-60-1	21	28-1/2	33	
	A95UH1E110C20S	110,000	106,000	95.0%	120-60-1	21	28-1/2	33	
	A95UH1E135D20S	132,000	128,000	95.0%	120-60-1	24-1/2	28-1/2	33	
DOWNFLOW	A95DF1E045B12S	44,000	42,000	95.0%	120-60-1	17-1/2	28-1/2	33	
	A95DF1E070B16S	66,000	64,000	95.0%	120-60-1	17-1/2	28-1/2	33	
	A95DF1E090C16S	88,000	85,000	95.0%	120-60-1	21	28-1/2	33	
	A95DF1E110C20S	110,000	106,000	95.0%	120-60-1	21	28-1/2	33	

Note: For vent length and clearances to combustibles, please reference installation instructions.

RESIDENTIAL FURNACES

DUCANE



96G1E
SINGLE STAGE
CONSTANT TORQUE MOTOR

Ducane™
AIR CONDITIONING AND HEATING

CONFIGURATIONS
- Upflow / Horizontal
- Downflow

HEAT EXCHANGER DESIGN
- Aluminized steel primary heat exchanger with crimped nonwelded construction
- AL29-4C stainless steel secondary heat exchanger

AIR DELIVERY SYSTEM
- Multi-speed high efficiency (constant torque) blower motor
- Easily removable slide out blower design
- Enhanced cooling SEER ratings when applied with properly matched cooling equipment.

WARRANTY
- 10 year limited parts warranty / lifetime heat exchanger warranty available. See limited warranty document for details.

VENTING
- Designed certified for direct (2-pipe) and non direct (1-pipe) applications
- Easily vented with PVC pipe

INSTALLATION FEATURES
- Left and right utility connections
- Design certified for direct and non-direct vent applications
- Zero step horizontal conversion
- Removable floor base (upflow / horizontal units) for bottom return air
- Complies with California's South Coast Air Quality Management district Low NOx requirements

PHYSICAL AND ELECTRICAL DATA

	Model	Input (Btuh)	Output (Btuh)	AFUE (ICS)	Nominal Cooling Capacity	Gas Inlet (in.)	Volts/Hz/ Phase	Max. Time Delay Breaker or Fuse	Nominal Full Load Amps	Trans (VA)	Approx Shipping Weight (lbs)
Upflow / Horizontal	96G1UH030BE08	30,000	28,000	96%	2 Ton	1/2	120-60-1	15	6.8	40	129
	96G1UH045BE12	44,000	42,000	96%	3 Ton	1/2	120-60-1	15	6.8	40	129
	96G1UH070BE12	66,000	63,000	96%	3 Ton	1/2	120-60-1	15	6.8	40	134
	96G1UH090CE16	88,000	85,000	96%	4 Ton	1/2	120-60-1	15	8.4	40	158
	96G1UH110CE20	110000	106000	96%	5 Ton	1/2	120-60-1	15	10.9	40	170
Downflow	96G1DF045BE12	44,000	42,000	96%	3 Ton	1/2	120-60-1	15	6.8	40	131
	96G1DF070BE16	66,000	63,000	96%	4 Ton	1/2	120-60-1	15	8.4	40	144
	96G1DF090CE16	88,000	85,000	96%	4 Ton	1/2	120-60-1	15	8.4	40	160

Note: For vent length and clearances to combustibles, please reference installation instructions.

DUCANE



96G2V

TWO STAGE VARIABLE SPEED GAS FURNACE

Ducane™ AIR CONDITIONING AND HEATING

CONFIGURATIONS

- Upflow / Horizontal
- Downflow

HEAT EXCHANGER DESIGN

- Aluminized steel primary heat exchanger with crimped nonwelded construction
- AL29-4C stainless steel secondary heat exchanger
- Non-welded crimped S-curve primary heat exchanger design for maximum durability

AIR DELIVERY SYSTEM

- Efficient ECM variable speed blower motor
- Motor features "soft start" and "soft stop" for quiet operation
- Active and passive dehumidification feature
- Easily removable slide-out blower design

VENTING

- 2-speed induced draft motor with stainless steel shaft, steel ball bearings, and fan cooled for long life
- Vent materials for Canadian applications must comply with ULC S636
- Certified for direct vent (2-pipe) or non-direct (1-pipe) applications

INSTALLATION FEATURES

- Left or right gas and electric entry
- Design certified for direct and non-direct vent applications
- Zero step horizontal conversion
- Removable floor base (upflow / horizontal units) for bottom return air
- All models comply with California's South Coast Air Quality Management district Low NOx requirements

WARRANTY

- 10 year limited parts warranty / lifetime heat exchanger warranty available. See limited warranty document for details.

ENERGY STAR

DESIGN CERTIFIED

AHRI CERTIFIED www.ahridirectory.org

AHRI CERTIFIED www.ahridirectory.org

PHYSICAL AND ELECTRICAL DATA

	MODEL	1ST STAGE		2ND STAGE		AFUE (ICUS)	NOM. COOLING CAPACITY (TONS)	GAS INLET (IN.)	VOLTS/ HZ/ PHASE	MIN. TIME DELAY BREAKER OR FUSE	NOMINAL F.L.A.	TRANS. (V.A.)	APPROX. WEIGHT (LBS.)
		INPUT (BTUH)	OUTPUT (BTUH)	INPUT (BTUH)	OUTPUT (BTUH)								
UPFLOW/HORIZONTAL	96G2UH045BV12	29,000	28,000	44,000	42,000	96.0	3	1/2	120-60-1	15	7.7	40	130
	96G2UH070BV12	43,000	41,000	66,000	62,000	96.0	3	1/2	120-60-1	15	7.7	40	138
	96G2UH090CV12	57,000	55,000	88,000	84,000	96.0	3	1/2	120-60-1	15	7.7	40	154
	96G2UH090CV20	57,000	55,000	88,000	85,000	96.0	5	1/2	120-60-1	20	12.8	40	166
	96G2UH110CV20	72,000	70,000	110,000	105,000	96.0	4	1/2	120-60-1	15	12.8	40	173
	96G2UH135DV20	88,000	84,000	132,000	126,000	96.0	5	1/2	120-60-1	20	12.8	40	188
DOWNFLOW	96G2DF070BV16	43,000	42,000	66,000	64,000	96.0	4	1/2	120-60-1	15	10.1	40	136
	96G2DF090CV20	57,000	56,000	88,000	85,000	96.0	5	1/2	120-60-1	20	12.8	40	164
	96G2DF110CV20	72,000	70,000	110,000	106,000	96.0	5	1/2	120-60-1	20	12.8	40	176

Note: For vent length and clearances to combustibles, please reference installation instructions.

PACKAGE ROOFTOP UNITS

ALLIED COMMERCIAL

E-SERIES™

LGH GAS/ELECTRIC

- 3- to 50-ton cooling capacity
- Up to 17 SEER, 16.0 IEER
- Up to 81% AFUE

LCH ELECTRIC/ELECTRIC

- 3- to 50-ton cooling capacity
- Up to 17 SEER, 16.0 IEER

LGH/LCH HIGH EFFICIENCY

- 3- to 20-ton cooling capacity
- Up to 23.5 SEER, 22.0 IEER and 15.0 EER



FEATURES

- ENERGY STAR® qualified
- Exceeds ASHRAE 90.1-2010 minimum standards by more than 38%
- Single-Zone VAV (Variable Air Volume) supply fan technology[2]
  - Up to 61% power savings over comparable units
  - 29% better moisture removal for humidity control
- Eco-Last™ Coil System uses up to 52% less refrigerant, is up to 59% lighter and has up to 20% fewer brazed joints than regular rooftop coils[3]
- Patented dehumidification system
- Intelli-Guide™ unit controller verifies service, operation, required setup and configuration with precision
- Unique WireRight™ system helps ensure the most accurate setup and the least service time
- Helps buildings qualify for the most LEED® points

WARRANTIES[1]

- 1-year limited warranty on covered components
- 3-year limited warranty on Eco-Last Coil System
- 3-year limited warranty on Intelli-Guide unit controller
- 5-year limited warranty on compressor
- 10-year limited warranty on aluminized gas heat exchanger
- 15-year limited warranty on stainless steel gas heat exchanger

[1] See warranty certificate for complete details.
[2] At 55% airflow when compared to full load
[3] Excludes heat pump models

PACKAGE ROOFTOP UNITS

ALLIED COMMERCIAL

K-SERIES™

KGA/KGB GAS/ELECTRIC

- 2- to 25-ton cooling capacity
- Up to 14 SEER and 16 IEER
- Up to 81% AFUE

KCA/KCB ELECTRIC/ELECTRIC

- 2- to 25-ton cooling capacity
- Up to 14 SEER and 14.5 IEER

KHA/KHB HEAT PUMP

- 2- to 20-ton cooling capacity
- Up to 16 SEER and 14.8 IEER
- Up to 8.5 HSPF

KDB Duel Fuel Heat Pump hi efficiency

- 2- to 10-ton cooling capacity
- Up to 16.5 SEER and 14.8 IEER
- Up to 8.5 HSPF



FEATURES

- Single-Zone VAV (Variable Air Volume) supply fan technology2
- - Up to 61% power savings over comparable units
  - 29% better moisture removal for humidity control when compared to systems with conventional supply fan motors
- Eco-Last™ Coil System uses up to 52% less refrigerant, is up to 59% lighter and has up to 20% fewer brazed joints than regular rooftop coils3
- Isolated compressor for quieter operation and easier service
- Easy-to-reach gas compartment for quick, simplified diagnostics and serviceability
- Unique WireRight™ system helps ensure the most accurate setup and the least service time
- More than 100 fieldselectable options ensure fast and easy installation

WARRANTIES[1]

- 1-year limited parts warranty
- 3-year limited warranty on Eco-Last Coil System
- 5-year limited compressor warranty
- 10-year limited aluminized steel heat exchanger warranty on KGA/KGB unit
- 15-year limited stainless steel heat exchanger warranty on KGA/KGB unit

1 See warranty certificate for complete details.
2 At 55% airflow when compared to full load
3 Excludes heat pump models

PACKAGE ROOFTOP UNITS

ALLIED COMMERCIAL

Z-SERIES™

ZGA/ZGB GAS/ELECTRIC

- 3- to 12.5-ton cooling capacity
- Up to 14 SEER and 15 IEER
- Up to 81% AFUE

ZCA/ZCB ELECTRIC/ELECTRIC

- 3- to 12.5-ton cooling capacity
- Up to 14 SEER and 15 IEER

ZHA/ZHB HEAT PUMP

- 3- to 10-ton heating /cooling capacity
- Up to 14.0 SEER and 12.5 IEER
- Up to 8.0 HSPF



FEATURES

- Matches the most popular footprint in the commercial industry, eliminating the need for an adapter curb in many replacement jobs
- Eco-Last Coil System uses up to 52% less refrigerant, is up to 59% lighter, and has up to 20% fewer brazed joints than regular rooftop unit coils[3]
- High-pressure switch guards the compressor from extreme operating conditions
- Optional Single-Zone VAV and BACnet (7.5- to 12.5-ton models)
- Proven scroll compressor helps long-term operation
- Up to 18% lighter than other like units[4]
- Isolated burner compartment provides better protection from moisture, reducing the risk of corrosion and rust

WARRANTIES[1]

- 1-year limited parts warranty
- 3-year limited warranty on Eco-Last
- 5-year limited compressor warranty
- 10-year limited aluminized steel heat exchanger warranty

[1] See warranty certificate for complete details.
[2] At 55% airflow when compared to full load
[3] Excludes heat pump models
[4] Comparison is based on a 5-ton gas/electric model versus other 5-ton gas/electric models.

PACKAGE ROOFTOP UNITS

ALLIED COMMERCIAL

Q-SERIES™

QHA
- 8.00 HSPF
- Net Cooling Capacity
  – 34,000 to 57,000 Btuh
- Heating Capacity
  - 33,500 to 57,500 Btuh
- Optional Electric Heat – 5 to 23 kW

QGA
- AFUE – 81%
- Net Cooling Capacity
  – 34,000 to 57,000 Btuh
- Gas Input Heat Capacity
  – 54,000 to 126,000 Btuh

QCA
- Net Cooling Capacity
  – 34,000 to 57,000 Btuh
- Optional Electric Heat – 5 to 23 kW

QGA ULNOx
- AFUE – 81%
- Net Cooling Capacity
  – 34,000 to 57,000 Btuh
- Gas Input Heat Capacity
  – 54,000 to 72,000 Btuh



- **Standard Efficiency – Three Phase- 60Hz**
- **3 to 5 Tons**
- **Up to 14.00 SEER**

FEATURES
- Efficiency ratings up to 14 SEER and 11.5 EER
- Accommodates both horizontal and downflow applications
- No special rigging or brackets required for placement
- Side and bottom connection entrances
- Base rails with forklift slots
- Quick connect electric connections
- Factory-installed float switch
- Ultra Low NOx (≤ 14ng/J) gas/electric models available

WARRANTIES[1]
- 10-year limited warranty on aluminized gas heat exchanger
- 5-year limited warranty on compressor
- 1-year limited warranty on covered components

[1] See warranty certificate for complete details.

MAGICPAK® ALL-IN-ONE HVAC PACKAGED UNIT

ALLIED COMMERCIAL

M-SERIES™

MCE
ELECTRIC HEATING / ELECTRIC COOLING
- 0.75 to 3.0 Ton
- Up to 14 SEER and 11 EER
- 3 to 10 KW Heat Strips

MGE
GAS HEATING / ELECTRIC COOLING
- 0.75 to 3.0 Ton
- Up to 14 SEER and 11 EER
- 80% Thermal Efficiency

MHP
ELECTRIC HEAT PUMP
- 0.75 to 3.0 Ton
- Up to 14 SEER and 11 EER

V-SERIES™

HWC
GAS HEATING / ELECTRIC COOLING
- 1.0 to 2.5 Ton
- 12 SEER
- Up to 95% AFUE

EWC
ELECTRIC HEATING / ELECTRIC COOLING
- 1.0 to 2.5 Ton
- 12 SEER

magicpak®



- **Self-contained package simplifies installation and service**
- **Fully ducted system**
- **Pre-wired and pre-charged**
- **No external refrigerant lines**
- **Antimicrobial evaporator drain pan**
- **Can be individually metered and controlled**

M-Series FEATURES
- Convenient toolless filter access
- Top supply and return ducting
- Factory-installed evaporator drain float switch
- Factory-installed ventilation capabilities
- Optional field installed motorized ventilation damper with controls (for MCE & MHP models only)

V-Series FEATURES
- Slide-out cooling chassis
- Freeze Shield™ condensate trap* with side or front
- Standard stainless steel heat exchanger

WARRANTIES[1]
- 5-year limited warranty on all parts
- Optional 20-year warranty on stainless steel heat

[1] See warranty certificate for complete details.

SPLIT SYSTEM UNITS

ALLIED COMMERCIAL

T-SERIES™

ELS
CONDENSING UNIT

- 6-, 7.5-, 10-, 12.5-, 15- and 20-nominal tons
- Up to 12.0 EER

ELA
AIR HANDLER

- 6-, 7.5-, 10-, 12.5-, 15- and 20-nominal tons

ELP
HEAT PUMP

- 7.5- and 10-nominal tons
- Up to 12.0 EER



FEATURES

- Proven scroll compressors for smooth operation
- Easy-access panels for convenient maintenance and service
- Dual refrigeration circuits (in 10–20-toncapacity units)
- Single-Zone VAV (Variable Air Volume) supply fan technology[5]
  - Up to 61% power savings over comparable units
  - 29% better moisture removal for humidity control when compared to systems with conventional supply fan motors

WARRANTIES[1]

- 1-year limited parts warranty
- 5-year limited compressor warranty

[1] See warranty certificate for complete details.
[2] At 55% airflow when compared to full load
[3] Excludes heat pump models
[4] Comparison is based on a 5-ton gas/electric model versus other 5-ton gas/electric models.
[5] Available on 7.5– to 20-ton split system units

LIGHT COMMERCIAL SPLIT SYSTEMS

ALLIED COMMERCIAL

SMALL SPLITS

4SCU13
AIR CONDITIONER

- Available in 1.5 to 5 ton capacities

4SHP
HEAT PUMP

- Available in 2 to 5 ton capacities

ACBX32
AIR HANDLER

- Available in 3, 4 and 5 ton capacities

TSA
condensers

- T-series small condensers
- 14 SEER
- 3, 4 and 5 ton capacities

TPA
heat pumps

- T-series small heat pumps
- 14 SEER
- 3, 4 and 5 ton capacities

BCE
AIR HANDLERS

- Available in 1.5 to 5 ton capacities

CBA27UHE
air handlers

- Available in 3, 3.5, 4 and 5 ton capacities



FEATURES

- Efficiency ratings up to 11.0 EER and 7.7 HSPF
- A variety of accessories such as compressor sound covers and TXV kits
- All serviceable brass fittings
- Lanced fins and rifled tubing provide exceptional heat transfer and low air resistance for high-efficiency operation
- Quiet Shift™ Technology allows the heat pump to enter defrost mode without excessive noise
- Proven scroll compressor helps long-term operation
- Corner-mounted service ports make brazing easier
- Two-screw panel removal for quicker access and cleaning

WARRANTIES[1]

- 1-year limited parts warranty
- 5-year limited compressor warranty

[1] See warranty certificate for complete details.

UNIT HEATERS

ALLIED COMMERCIAL

LS25

SEPARATED COMBUSTION UNITS IN THREE CABINETS

Steady-State Efficiency – 82%

30,000 to 105,000 BTU Cabinet

- Single stage heating

125,000 to 200,000 BTU Cabinet

- Single stage heating

250,000 to 400,000 BTU Cabinet

- Two Stage Heating



- **Low profile, compact in design and easy to install**
- **Completely assembled with controls factory installed & wired**
- **Hanging brackets are shipped loose for field installation**
- **Test operated at the factory to ensure proper operation**

CABINET

- Constructed of pre-painted heavy gauge cold rolled steel
- Hinged, reversible door for easy access
- Adjustable louvers for control of air flow direction
- Junction box located outside of cabinet
- Hanging brackets for suspending unit are included
- Unit may be rotated 180 degrees (top for bottom) for ease of installation of gas, electrical and flue locations

HEATING SYSTEM

- Tubular Aluminized Steel Heat Exchanger
- Inshot Burner Assembly
- Gas Control Valve
- Separated Combustion
- Combustion Air Inducer
- Pressure Switch
- Limit Control(s)
- Flame Rollout Switch

WARRANTIES[1]

- 1-year limited parts warranty
- 3-year limited warranty on Eco-Last System
- 5-year limited compressor warranty
- 10-year limited aluminized steel heat exchanger warranty on KGA/KGB units
- 15-year limited stainless steel heat exchanger warranty on KGA/KGB units

[1] See warranty certificate for complete details.
At 55% airflow when compared to full load
Excludes heat pump models

UNIT HEATERS

ALLIED COMMERCIAL

STANDARD AND COMPACT

LF25
STANDARD AND COMPACT





COMPACT COMBUSTION HEATER FEATURES

- Ideal for hard-to-heat applications where excessive dust, dirt or humidity or negative pressure is a concern
- Durable tubular heat exchanger
- Heating capacities from 30,000–105,000 Btuh
- Up to 85% thermal efficiency
- Compact cabinet design
- Hinged door allows easy access to components
- Sidewall venting eliminates roof penetrations
- Self-diagnostic board with LED display improves troubleshooting efficiency and accuracy

STANDARD UNIT HEATERS FEATURES

- Ideal for a wide range of residential and commercial applications
- Heating capacities from 30,000–400,000 Btuh
- Up to 85% thermal efficiency
- Optional stainless steel heat exchanger (for 125,000–400,000 Btuh) is available for longer product life
- Sidewall venting eliminates roof penetrations
- Self-diagnostic board with LED display improves troubleshooting efficiency and accuracy

WARRANTIES[1]

- 1-year limited warranty on covered components
- 10-year limited aluminized heat exchanger warranty
- 15-year limited stainless steel heat exchanger warranty

[1] See warranty certificate for complete details.

UNIT HEATERS

ADP

UHRS Series



FEATURES:

- Residential – low profile units.
- Great for garages & shops.
- Sidewall venting eliminates roof penetrations.
- Wiring junction box is located inside of unit.
- 1" clearance from ceiling for easy installation.
- Heating capacities from 30,000 – 105,000 BTUH.
- Up to 85% thermal efficiency.
- Self-diagnostic board with LED display improves troubleshooting.
- Power exhaust system allows horizontal venting to 25 ft.
- Tubular heat exchangers made of aluminized steel.
- Aluminized steel in shot burners provide efficient trouble free operation.
- Direct drive propeller fans are dynamically balanced for quiet and smooth operation.

	Model	UHRS -30	UHRS -45	UHRS -60	UHRS -75	UHRS -90	UHRS -105
Gas Heating Performance	Heating Capacity Input *(BTUH)*	30,000	40,000	60,000	75,000	90,000	105,000
	NG Heating Output *(BTUH)*	25,020	37,665	50,220	62,550	75,420	87,675
	LP Heating Output *(BTUH)*	25,560	38,385	51,180	63,825	77,130	89,250
	Steady State Efficiency *Natural Gas*	83%	83%	83%	83%	83%	83%
	Steady State Efficiency *LPG / Propane*	85%	85%	85%	85%	85%	85%
	Temp Rise *(deg F)*	37	52	47	65	43	59
Connections	Flue Size Round *(in)*	4 [1]	4 [1]	4 [1]	4 [1]	4 [1]	4 [1]
	Gas Piping Size *(in, NPT)*	1/2	1/2	1/2	1/2	1/2	1/2
Fan Data	Num of Fans	1	1	1	1	1	1
	Diameter *(in)*	10	10	14	14	16	16
	Num of Blades	4	4	4	4	4	4
	Motor Output *(hp)*	1/25	1/25	1/15	1/15	1/10	1/10
	Motor Full Load Amps	0.45	0.45	0.9	0.9	1.5	1.5
	Motor RPMs	1550	1550	1075	1075	1075	1075
	Air Volume *(CFM)*	625	665	1000	1200	1600	1500
	Throw Ft.	27	29	34	41	46	43
Physical Data	Overall Dimensions *H x W x D (in)*	12-3/8 x 29 x 27-1/2	12-3/8x 29 x 27-1/2	17-1/2 x 29 x 27-1/2	17-1/2 x 29 x 27-1/2	23 x 29 x 28-7/8	23 x 29 x 28-7/8
	Ship Weight *(lbs)*	60	65	90	95	120	125

[1] 2 x 4 in. (51 x 102 mm) diameter adaptor is furnished with unit for flue connection.
Note: All models have aluminized steel heat exchanger; all models are 115 V, 60 Hz, 1 phase

UNIT HEATERS

ADP

UHCM Series



FEATURES:

- Heating capacities from 125,000 – 400,000 BTUH.
- Up to 85% thermal efficiency.
- Heat exchangers are laboratory life-cycle tested.
- Wiring junction box is located outside of unit.
- Safe direct spark ignition. No standing pilot light.
- Stainless steel heat exchanger is available for longer product life.
- Tubular heat exchangers made of aluminized steel or stainless steel.
- Aluminized steel in shot burners provide efficient trouble free operation.
- Sidewall venting eliminates roof penetrations.
- Self-diagnostic board with LED display improves troubleshooting efficiency and accuracy.
- 3/8 x 16 rivet nuts are located on the top of cabinet for suspending unit using threaded rod.
- Power exhaust system with a sealed flue collector allows conventional vertical or horizontal venting to 35 ft. (depends on unit size).
- Direct drive propeller fans are dynamically balanced for quiet, smooth operation.

	Model	UHCM -125	UHCM -150	UHCM -175	UHCM -200	UHCM -250	UHCM -300	UHCM -350	UHCM -400
Gas Heating Performance	Heating Capacity Input *(BTUH)*	125,000	150,000	175,000	200,000	250,000	300,000	350,000	400,000
	Output Natural Gas *(BTUH)*	103,750	124,500	145,250	166,000	207,500	246,000	290,500	328,000
	Output LPG/Propane *(BTUH)*	106,250	127,500	148,750	170,000	212,500	252,000	294,000	336,000
	Steady State Efficiency *Natural Gas*	83%	83%	83%	83%	83%	82%	83%	82%
	Steady State Efficiency *LPG / Propane*	85%	85%	85%	85%	85%	84%	84%	84%
Connections	Flue Size Round *(in)*	4 [1]	4 [1]	5 [2]	5 [2]	5 [2]	5 [2]	6 [3]	6 [3]
	Gas Piping Size *(in, NPT)*	1/2	1/2	1/2	1/2	3/4	3/4	3/4	3/4
Fan Data	Number of Fans	1	1	1	1	2	2	2	2
	Diameter *(in)*	16	16	18	18	16	16	18	18
	Number of Blades	4	4	5	5	4	4	5	5
	Motor Output *(hp)*	1/5	1/5	1/3	1/3	1/5	1/5	1/3	1/3
	Motor Full Load Amps	3	3	4.4	4.4	3	3	4.4	4.4
	Motor RPMs	1075	1075	1075	1075	1075	1075	1075	1075
	Air Volume *(CFM)*	1950	1950	2350	2650	3400	4000	4500	4750
	Throw Ft.	49	49	52	59	60	71	70	78
Physical Data	Overall Dimensions *H x W x D (in)*	35-1/4 x 24 x 42-1/2	35-1/4 x 24 x 42-1/2	35-1/4 x 29-1/2 x 42-1/2	35-1/4 x 29-1/2 x 42-1/5	35-1/4 x 41-1/8 x 42-1/2	35-1/4 x 41-1/8 x 42-1/2	35-1/4 x 51-1/2 x 42-1/2	35-1/4 x 51-1/2 x 42-1/2
	Ship Weight *(lbs)*	167	177	190	200	310	330	360	380

[1] 2-1/8 x 4 in. (54 x 102 mm) diameter adaptor is furnished with unit for flue connection.
[2] 2-1/4 x 2-3/4 in. (57 x 70 mm) rectangular to 5 in. (127 mm) round adaptor is furnished with unit for flue connection.
[3] 2-1/4 x 2-3/4 in. (57 x 70 mm) rectangular to 6 in. (152 mm) round adaptor is furnished with unit for flue connection.
Note: All models are 115 volts, 60 Hz, 1 phase. UHCM unit heaters are not approved for residential applications.

UNIT HEATERS

REZNOR

UDAP Power Vented, Low Static Axial Fan Unit Heaters for Residential and Commercial/Industrial Use

Size		UDAP 30	UDAP 45	UDAP 60	UDAP 75	UDAP 100	UDAP 125	UDAP 150
Input Heating Capacity	BTUH	30,000	45,000	60,000	75,000	105,000	120,000	150,000
	kw/H	8.8	13.2	17.6	22.0	30.8	35.2	43.9
Output Heating Capacity[A]	BTUH	24,600	37,350	49,800	62,250	87,150	99,600	124,500
	kw/H	7.2	11.0	14.6	18.3	25.6	29.2	36.4
Gas Connection (inches)[B]	Natural	1/2	1/2	1/2	1/2	1/2	1/2	1/2
	Propane	1/2	1/2	1/2	1/2	1/2	1/2	1/2
Vent Connection Size (in. diam.)[c]		4	4	4	4	4	4	5
Control Amps (24 volt)		1.0	1.0	1.0	1.0	1.0	1.0	1.0
Full Load Amps (115 volt)		1.9	2.4	2.4	3.3	3.9	5.1	3.8
Max. Over Current Protection (115V)[D]		15	15	15	15	15	15	15
Air Volume CFM		456	629	769	961	1345	1537	1921
Approximate Net Weight (lbs)		54	59	67	72	96	101	172
LIST								

Size		UDAP 175	UDAP 200	UDAP 225	UDAP 250	UDAP 300	UDAP 350	UDAP 400
Input Heating Capacity	BTUH	175,000	200,000	225,000	250,000	300,000	350,000	400,000
	kw/H	51.2	58.6	65.9	73.2	87.8	102.5	117.1
Output Heating Capacity[A]	BTUH	145,250	166,000	186,750	207,500	249,000	290,500	332,000
	kw/H	42.5	48.6	54.7	60.8	72.9	85.1	97.2
Gas Connection (inches)[B]	Natural	1/2	1/2	3/4	3/4	3/4	3/4	3/4
	Propane	1/2	1/2	3/4	3/4	3/4	3/4	3/4
Vent Connection Size (in. diam.)[c]		5	5	5	5	6	6	6
Control Amps (24 volt)		1.0	1.0	1.0	1.0	1.0	1.0	1.0
Full Load Amps (115 volt)		3.8	4.6	7.5	7.5	11.0	11.0	11.0
Max. Over Current Protection (115V)[D]		15	15	15	15	20	20	20
Air Volume CFM		2242	2562	2882	3202	3843	4483	5123
Approximate Net Weight (lbs)		187	187	203	215	269	294	306
LIST								

[A] CSA ratings for altitudes to 2000 ft.
[B] Size shown is for gas connection to a single-stage gas valve, not supply line size.
[C] Smaller and/or larger vent pipe diameters may be permissible; refer to the Venting Installation Manual for Power Vented Units.
[D] MOPD=2.25 x (largest motor FLA) + smallest motor FLA. Answer is rounded to the nearest commercially available circuit breaker.

*** Parts Available**

UNIT HEATERS

REZNOR

UDAS Separated Combustion, Low Static Unit Heaters for Residential and Commercial/Industrial Use

- Sizes 30-125 certified for residential heating application
- Sizes 30-400 certified for commercial/industrial heating application
- 82-83% Thermal efficient ~ TOP in it's class!
- 50-60°F Rise range
- New T-CORE2® design titanium stabilized aluminized steel heat exchanger (patent pending)
- New T-CORE2® single burner combustion system including a one-piece burner assembly (patent pending)
- 115/1/60 Supply voltage
- 115 Volt open fan motor with internal overload protection
- Transformer for 24-volt controls
- Integrated circuit board with diagnostic indicator lights
- Multi-try direct ignition with 100% lockout
- Fan relay (included on the circuit board)
- Natural or propane single-stage gas valve (field adjustable for operation to 9000 ft. elevation)

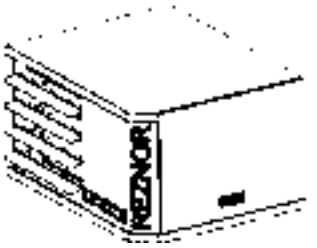

CGA 2.6b ANSI Z83.8b

CSA International Requirement 10.96 U.S. - Sizes 30-125

- Vibration/noise isolated fan and venter motors ~ designed for low noise operation
- 2-pt and 4-pt suspension ~ standard on all sizes
- External terminal strip for 24-volt wiring
- External gas connection
- Full fan guard ~ engineered for safety
- Improved cabinet design with less visible hardware and a NEW Reznor appearance

Size		UDAS100	UDAS125	UDAS150
Input Heating Capacity	BTUH	105,000	120,000	150,000
	kw/H	30.8	35.2	43.9
Output Heating Capacity[A]	BTUH	87,150	99,600	124,500
	kw/H	25.6	29.2	36.4
Gas Connection (inches)[B]	Natural	1/2	1/2	1/2
	Propane	1/2	1/2	1/2
Vent Connection Size (in. diam.)[C]		4	4	5
Combustion Air Inlet (in. diam.)[C]		4	4	6
Control Amps (24 volt)		1.0	1.0	1.0
Full Load Amps (115 volt)		3.9	5.1	3.8
Max. Over Current Protection (115V)[D]		15	15	15
Air Volume CFM		1345	1537	1921
Approximate Net Weight (lbs)		97	102	173
LIST		$4,125.00	**$4,587.00**	$5,120.00

[A] CSA ratings for altitudes to 2000 ft.
[B] Size shown is for gas connection to a single-stage gas valve, not supply line size.
[C] Smaller and/or larger vent and combustion air pipe diameters may be permissible; refer to the Venting Installation Manual for Separated Combustion Units.
[D] MOPD=2.25 x (largest motor FLA) + smallest motor FLA. Answer is rounded to the nearest commercially available circuit breaker.

*** Parts Available**

Options: 2-stage natural or propane gas valve / gas conversion kit
One of the following kits must be used in order to make the above units operational:
Horizontal or Vertical Combustion Air/Vent Kit (CC2 or CC6)

RADIANT HEATERS

INFRASAVE

Model	Capacity (BTU/HR) Sea Level to 4500 ft.	Available Tube Lengths 20'	30'	40'	50'	60'	70'
ITB-200	200,000				$6,144.00		
ITB-175	175,000				$6,144.00		$7,083.00
ITB-155	155,000			$4,887.00	$5,661.00		
ITB-130	130,000		$4,354.00	$4,789.00	$5,563.00		
ITB-110	110,000		$4,354.00	$4,789.00	$5,563.00		
ITB-80	80,000	$3,912.00	$4,354.00	$4,789.00			
ITB-60	60,000	$3,912.00	$4,354.00				
Heater Length		21'-4"	31'-4"	41'-4"	51'-4"	61'-4"	71'-4"
Weight (lbs)		90	120	150	180	210	240



DOUBLE TUBE

Model	Capacity (BTU/HR) Sea Level to 4500 ft.	Available Tube Lengths 10'	15'	20'	30'
ITBU-200	200,000				$7,093.00
ITBU-175	175,000				
ITBU-155	155,000			$5,387.00	$6,583.00
ITBU-130	130,000			$5,289.00	
ITBU-110	110,000			$5,289.00	
ITBU-80	80,000				
ITBU-60	60,000	$4,376.00			
Heater Length		12'-8"		22'-8"	32'-8"
Weight (lbs)		90		120	150



P40-R Garage Small Shop Heater

P40-R is the garage small shop heater approved for residential use.

Features

- Compact unit overall length 10’
- 4” aluminized tube – single bend tube
- Complete with 110V plug on burner box
- Easy to open and service Premier burner box
- Indicator lights
- Completely assembled, lift and hang right out of the box
- Accessories included in box
- 24v Thermostat
- Thermostat wire
- Hanging chain and hooks
- Gas flex connector
- 80%+ efficiency
- 3 Year warranty

Part #	LIST
P40-R	$4,506.00

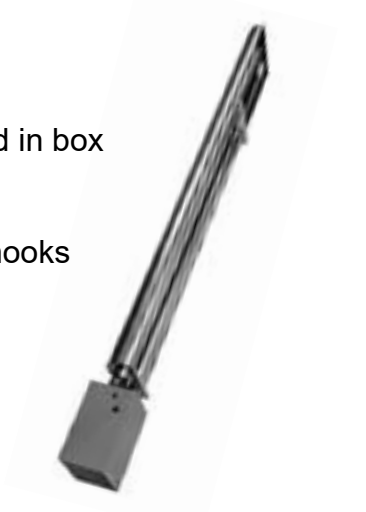

RADIANT HEATERS

INFRASAVE

IL SERIES HIGH INTENSITY (LUMINOUS) HEATERS

Model	Capacity (BTU)	LIST
IL-37-N	37,000	$1,653.00
IL-50-LP	50,000	$1,985.00
IL-75-N	75,000	$2,301.00
IL-100-NG	100,000	$2,550.00
IL-150-N	150,000	$4,262.00
IL-200-N	200,000	$4,676.00

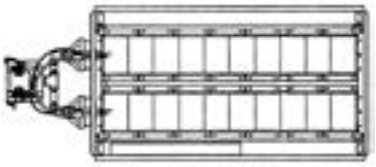

IQ SERIES Dimension and Specifications

MODEL	CAPACITY (BTU/HR.)	Available tube lengths						
	SEA LEVEL TO 4500	10’	20’	30’	40’	50’	60’	70’
IQ-200	200,000					✓	✓	✓
IQ-175	175,000					✓	✓	✓
IQ-155	155,000				✓	✓	✓	
IQ-130	130,000			✓	✓	✓		
IQ-110	110,000			✓	✓	✓		
IQ-80	80,000		✓	✓	✓			
IQ-60	60,000		✓	✓				
IQ-45	45,000	✓	✓					
Heater length		11’8”	21’4”	31’	40’8”	50’4”	60’	69’8”
Weight (LBS.)		100	150	200	240	315	360	430

De-rate heater 4% for each additional 1000ft of elevation, tube length must conform to firing rate

Optional Accessories

Part #	Description	LIST
JA-0528-XX	4" Horizontal Flue Vent Terminal (Wall)	$88.00
JS-0532-VC	Fresh Air Intake Wall Cap	$69.00'
JA-0514-XX	4" x 4" x 6" Vent Tee	$524.00
JS-0508-JZ	90° Elbow Kit with Reflector Cap (Combine two 90° kits to create 180° elbow)	$661.00'
JM-0150-XX	TruTemp Infrared Setback Thermostat	$449.00
JL-0798-JC	Hanging Chain (Box of 50 ft)	$205.30

Consult your local branch for these other infrasave optional accessories:
- Line Voltage & 24V Thermostat and Controls
- Flexible Gas Connectors & Type 1 Hoses
- Side Reflector Extensions

ADP ONE PIECE MULTI-POSITION HYDRONIC AIR HANDLERS

Healthy Solutions®
Premier Products






Series	F Series	B Series	MX Series	S Series
DESCRIPTION	Compact Air Handlers	Hydronic Air Handlers	Compact Modular Blowers	Compact Wall Mount Air Handlers
WARRANTY				
Extended Warranty Available	✓	✓	✓	✓
COIL FEATURES				
Aluminum Coil	✓			✓
Copper Coil	✓	✓		✓
Microban® Antimicrobial Pan	✓			
UV Resistant Pan	✓	✓		
APPLICATION				
Vertical Upflow	✓	✓	✓	✓
Vertical Downflow	✓*		✓	
Horizontal Right/Left	✓	✓	✓	
Air Return	✓ Bottom	✓ Bottom/ Side°	✓ Bottom	✓ Front
MOTOR				
Variable Speed ECM		✓		
Five-Speed ECM	✓			✓
Three-Speed	✓	✓	✓	✓
HEAT OPTIONS				
Electric	✓*	✓*	*	✓*
Hot Water		✓*	✓	
No Heat	✓	✓	✓	

Made in the USA
from US and imported parts

✓ Available factory installed * Available field installed kit ° Side return available in 12-36 MBTUH only

Please contact your local branch for more information and pricing

HEATING COILS

MADOK

3/8" Heating Coils

ALL CONNECTIONS ARE 3/4" SWEAT CONNECTIONS

ALL DIMENSIONS ARE IN INCHES

MODEL	A	B
MHC-24	12	16
MHC-36	14	20
MHC-48	16	22
MHC-60	18	24
MHC-90	20	30

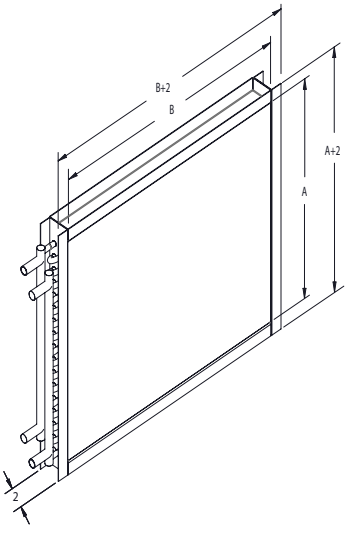

Heating Coil Capacities

Based on 65°F entering air temperature

Model MHC-24	Water Flow Rate – 2 U.S. gpm / Water Pressure Drop – 0.3 ft.wg					**24 MBH**
Air Flow (cfm)	450	525	600	675	750	
SP – in.wg	0.05	0.07	0.09	0.10	0.12	
Entering Water Temperature	**Heating Capacity (MBH)**					
180°F	20.1	23.3	25.1	26.7	27.9	
160°F	17.5	19.0	20.4	21.7	22.7	
140°F	13.5	14.6	15.7	16.6	17.4	
Model MHC-36	Water Flow Rate – 3 U.S. gpm / Water Pressure Drop – 0.6 ft.wg					**36 MBH**
Air Flow (cfm)	700	800	900	1000	1100	
SP – in.wg	0.06	0.08	0.09	0.11	0.13	
Entering Water Temperature	**Heating Capacity (MBH)**					
180°F	33.2	35.8	38.2	40.4	42.2	
160°F	27.2	29.3	31.3	33.1	34.6	
140°F	21.1	22.8	24.2	25.6	26.7	
Model MHC-48	Water Flow Rate – 4 U.S. gpm / Water Pressure Drop – 0.9 ft.wg					**48 MBH**
Air Flow (cfm)	1000	1100	1200	1300	1400	
SP – in.wg	0.07	0.09	0.10	0.11	0.13	
Entering Water Temperature	**Heating Capacity (MBH)**					
180°F	45.7	48.3	50.8	52.8	54.6	
160°F	37.5	39.6	41.6	43.2	44.8	
140°F	29.1	30.7	32.3	33.5	34.6	
Model MHC-60	Water Flow Rate – 5 U.S. gpm / Water Pressure Drop – 1.2 ft.wg					**60 MBH**
Air Flow (cfm)	1300	1400	1500	1600	1700	
SP – in.wg	0.08	0.09	0.10	0.11	0.13	
Entering Water Temperature	**Heating Capacity (MBH)**					
180°F	58.6	61.2	63.6	65.6	67.5	
160°F	48.1	50.2	52.2	53.8	55.4	
140°F	37.4	39.0	40.5	41.7	42.9	
Model MHC-90	Water Flow Rate – 7.5 U.S. gpm / Water Pressure Drop – 2.6 ft.wg					**90 MBH**
Air Flow (cfm)	2000	2100	2200	2300	2400	
SP – in.wg	0.10	0.10	0.11	0.12	0.13	
Entering Water Temperature	**Heating Capacity (MBH)**					
180°F	90.0	91.4	93.5	95.6	97.7	
160°F	73.1	75.1	76.9	78.6	80.2	
140°F	57.0	58.5	59.9	61.1	62.4	

Please contact your local branch for more information and pricing

COOLING COILS

MADOK

3/8" Cooling Coils

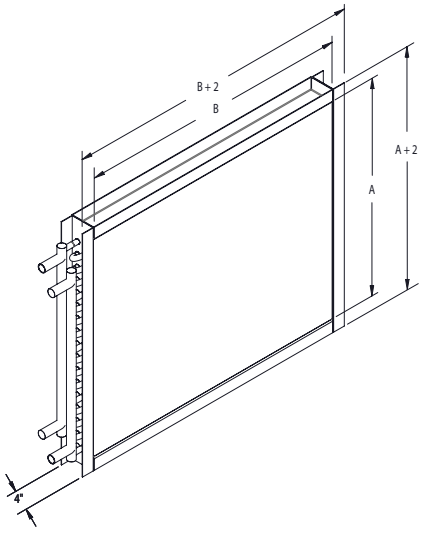

ALL DIMENSIONS ARE IN INCHES

MODEL	A	B	CONN. SIZE
MCC-24	14	20	3/4
MCC-36	16	26	3/4
MCC-48	20	28	1
MCC-60	24	28	1
MCC-90	28	36	1 1/4

Cooling Coil Capacities

Based on 80°F db/67°F wb Entering Air Temperature

Model MCC-24		Water Flow Rate – 5 U.S. gpm / Water Pressure Drop – 2.7 ft.wg				**2 Ton**
Air Flow (cfm) SP – in.wg	650 0.15	725 0.18	800 0.21	875 0.24	950 0.28	
Entering Water Temperature	**Cooling Capacity (MBH)**					
42°F	22.5	23.7	24.8	25.9	26.9	
45°F	20.3	21.4	22.4	23.4	24.3	
48°F	18.0	19.0	19.9	20.9	21.8	
Model MCC-36		Water Flow Rate – 7 U.S. gpm / Water Pressure Drop – 4.7 ft.wg				**3 Ton**
Air Flow (cfm) SP – in.wg	1000 0.16	1100 0.19	1200 0.21	1300 0.24	1400 0.27	
Entering Water Temperature	**Cooling Capacity (MBH)**					
42°F	35.2	36.9	38.4	39.9	41.4	
45°F	31.6	33.1	34.6	36.0	37.3	
48°F	28.0	29.4	30.7	32.0	33.2	
Model MCC-48		Water Flow Rate – 10 U.S. gpm / Water Pressure Drop – 5.3 ft.wg				**4 Ton**
Air Flow (cfm) SP – in.wg	1400 0.17	1500 0.19	1600 0.21	1700 0.23	1800 0.25	
Entering Water Temperature	**Cooling Capacity (MBH)**					
42°F	49.9	51.6	53.3	54.8	56.4	
45°F	44.8	46.3	47.8	49.3	50.7	
48°F	39.6	41.0	42.4	43.8	45.1	
Model MCC-60		Water Flow Rate – 12 U.S. gpm / Water Pressure Drop – 5.0 ft.wg				**5 Ton**
Air Flow (cfm) SP – in.wg	1800 0.19	1900 0.21	2000 0.23	2100 0.24	2200 0.26	
Entering Water Temperature	**Cooling Capacity (MBH)**					
42°F	61.9	63.6	65.2	66.8	68.3	
45°F	55.5	57.0	58.6	60.0	61.5	
48°F	49.2	50.6	52.0	53.3	54.6	
Model MCC-90		Water Flow Rate – 18 U.S. gpm / Water Pressure Drop – 9.6 ft.wg				**7½ Ton**
Air Flow (cfm) SP – in.wg	2700 0.19	2850 0.21	3000 0.23	3150 0.24	3300 0.26	
Entering Water Temperature	**Cooling Capacity (MBH)**					
42°F	96.5	99.2	101.8	104.4	106.8	
45°F	86.4	88.8	91.1	93.5	95.8	
48°F	76.2	78.4	80.6	82.8	84.8	

Please contact your local branch for more information and pricing

EVAPORATOR COILS

MADOK

3/8" DX (Evaporator) Coils

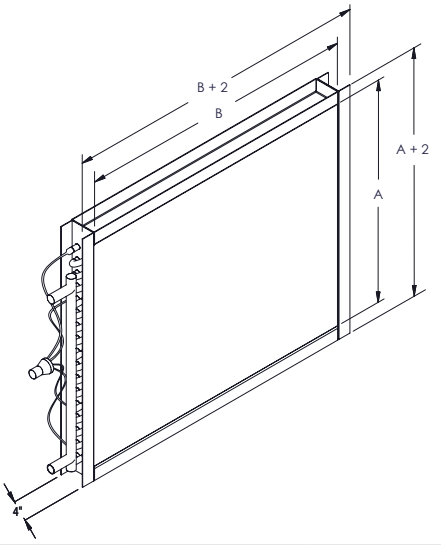

ALL DIMENSIONS ARE IN INCHES

MODEL	A	B	LIQUID CONN.	SUCTION CONN.
MDX-24	12	20	5/8	5/8
MDX-36	16	22	5/8	7/8
MDX-48	18	26	5/8	7/8
MDX-60	20	29	5/8	7/8
MDX-90	24	36	7/8	1 1/8
MDX-120	28	42	1 1/8	1 1/8

DX (Evaporator) Coil Capacities

Based on 80°F db/67°F wb Entering Air Temperature

Model MDX-24		Saturated Evaporating Temperature - 45°F				**2 Ton**
Air Flow (cfm)	650	725	800	875	950	
SP – in.wg	0.19	0.22	0.26	0.30	0.35	
Refrigerant	**Cooling Capacity (MBH)**					
R-22	21.3	22.9	24.5	25.7	26.9	
R-410a	22.4	24.2	25.9	27.3	28.6	
Model MDX-36		Saturated Evaporating Temperature - 45°F				**3 Ton**
Air Flow (cfm)	1000	1100	1200	1300	1400	
SP – in.wg	0.20	0.24	0.27	0.31	0.35	
Refrigerant	**Cooling Capacity (MBH)**					
R-22	32.5	34.6	36.4	37.9	39.4	
R-410a	34.3	36.6	38.7	40.5	42.1	
Model MDX-48		Saturated Evaporating Temperature - 45°F				**4 Ton**
Air Flow (cfm)	1400	1500	1600	1700	1800	
SP – in.wg	0.22	0.25	0.27	0.30	0.33	
Refrigerant	**Cooling Capacity (MBH)**					
R-22	44.6	46.7	48.8	50.4	52.0	
R-410a	46.9	49.3	51.6	53.3	55.0	
Model MDX-60		Saturated Evaporating Temperature - 45°F				**5 Ton**
Air Flow (cfm)	1800	1900	2000	2100	2200	
SP – in.wg	0.23	0.26	0.28	0.30	0.32	
Refrigerant	**Cooling Capacity (MBH)**					
R-22	56.4	58.5	60.5	62.2	63.9	
R-410a	59.3	61.6	63.8	65.7	67.4	
Model MDX-90		Saturated Evaporating Temperature - 45°F				**7½ Ton**
Air Flow (cfm)	2700	2850	3000	3150	3300	
SP – in.wg	0.24	0.26	0.28	0.30	0.33	
Refrigerant	**Cooling Capacity (MBH)**					
R-22	83.7	86.4	88.7	90.9	92.9	
R-410a	90.0	93.2	95.9	98.5	100.9	
Model MDX-120		Saturated Evaporating Temperature - 45°F				**10 Ton**
Air Flow (cfm)	3600	3800	4000	4200	4400	
SP – in.wg	0.23	0.25	0.27	0.29	0.32	
Refrigerant	**Cooling Capacity (MBH)**					
R-22	115.3	119.3	123.3	126.2	129.4	
R-410a	121.2	125.8	130.2	133.6	137.1	

Please contact your local branch for more information and pricing

LINE SETS

Minisplit Refrigerant Linesets

- Both lines insulated



Part #	Length	Liquid x Suction	LIST
MS-406-15-3/8W-LIN	15'	1/4 x 3/8	
MS-406-20-3/8W	20'	1/4 x 3/8	-
MS-406-25-3/8W-LIN	25'	1/4 x 3/8	$419.00
MS-406-50-3/8W-LIN	50'	1/4 x 3/8	
MS-408-15-3/8W-LIN	15'	1/4 x 1/2	
MS-408-20-3/8W	20'	1/4 x 1/2	-
MS-408-25-3/8W-LIN	25'	1/4 x 1/2	
MS-408-50-3/8W-LIN	50'	1/4 x 1/2	
MS-410-15-3/8W	15'	1/4 x 5/8	$348.00
MS-410-25-3/8W-LIN	25'	1/4 x 5/8	
MS-410-50-3/8W-LIN	50'	1/4 x 5/8	
MS-610-25-3/8W	25'	3/8 x 5/8	$491.00
MS-610-50-3/8W-LIN	50'	3/8 x 5/8	$868.00

Plain End Line Sets

- Liquid Line - Non insulated
- Suction Line - insulated



Part #	Length	Liquid x Suction	LIST
610-25-3/8W	25'	3/8 x 5/8	$448.00
610-30-3/8W	30'	3/8 x 5/8	$525.00
610-50-3/8W-LIN	50'	3/8 x 5/8	$785.00
612-25-3/8W	25'	3/8 x 3/4	$509.00
612-30-3/8W	30'	3/8 x 3/4	$574.00
612-40-3/8W	40'	3/8 x 3/4	$770.00
612-50-3/8W	50'	3/8 x 3/4	$909.00
614-25-3/8W	25'	3/8 x 7/8	$909.00
614-30-3/8W	30'	3/8 x 7/8	$660.00
614-40-3/8W	40'	3/8 x 7/8	$745.00
614-50-3/8W	50'	3/8 x 7/8	$970.00

EZ-Pull Linesets

- UL 723, ASTM E84 (25/50), flame and spread index
- All polythylene insulated line sets sold in North America do not meet UL 94VBT
- "Rugged" exterior allows for easier installation of the line set

Part #	Length	Liquid x Suction	LIST
EZP-406-15-1/2W	15'	1/4 x 3/8	$191.50
EZP-406-20-1/2W	20'	1/4 x 3/8	$229.00
EZP-406-25-1/2W	25'	1/4 x 3/8	$346.00
EZP-406-50-1/2W	50'	1/4 x 3/8	$660.00
EZP-408-15-1/2W	15'	1/4 x 1/2	$200.90
EZP-408-20-1/2W	20'	1/4 x 1/2	$239.70

**** EZ-Pull Linsets Also Available in Black for All Sizes***



Part #	Length	Liquid x Suction	LIST
EZP-408-25-1/2W	25'	1/4 x 1/2	$272.30
EZP-408-50-1/2W	50'	1/4 x 1/2	$473.00
EZP-410-15-1/2W	15'	1/4 x 5/8	-
EZP-410-20-1/2W	20'	1/4 x 5/8	-
EZP-410-25-1/2W	25'	1/4 x 5/8	$289.80
EZP-410-50-1/2W	50'	1/4 x 5/8	$806.00
EZP-610-25-1/2W	25'	3/8 x 5/8	$313.00

EZ-Roll PLUS Linesets

EZ-Roll Plus™ Black is available in standard line set dual-line insulated ductless mini split options for split heating or cooling systems and available as single line insulated options for dedicated thermal or cooling applications.



Part #	Liquid x Suction	LIST
EZB-1/4-164-1/2W-LIN	EZ-ROLL PLUS LINESET 1/4 X 1/2 X 164 BLK	$819.00
EZB-3/8-164-1/2W-LIN	EZ-ROLL PLUS LINESET 3/8 X 1/2 X 164 BLK	$1,214.00
EZB-1/2-164-1/2W-LIN	EZ-ROLL PLUS LINESET 1/2 X 1/2 X 164 BLK	$1,545.00
EZB-5/8-164-1/2W-LIN	EZ-ROLL PLUS LINESET 5/8 X 1/2 X 164 BLK	$1,878.00
EZB-1/2-164-3/4W-LIN	EZ-ROLL PLUS LINESET 1/2 X 3/4 X 164 BLK	$1,978.00
EZB-1/4-164-3/4W-LIN	EZ-ROLL PLUS LINESET 1/4 X 3/4 X 164 BLK	$1,063.00
EZB-406-50-1/2W-LIN	EZ-ROLL PLUS M/S LINESET1/4L X 3/8S BLK	$857.00
EZB-3/8-25-1/2W-LIN	EZ-ROLL PLUS LINESET 3/8 X 1/2 X 25FT BK	$196.90
EZB-5/8-25-1/2W-LIN	EZ-ROLL PLUS LINESET 5/8 X 1/2 X 25FT BK	$305.00

Part #	Liquid x Suction	LIST
EZB-5/8-50-1/2W-LIN	EZ-ROLL PLUS LINESET 5/8 X 1/2 X 50 BLK	$573.00
EZB-1/4-50-1/2W-LIN	EZ-ROLL PLUS LINESET 1/4 X 1/2 X 50 BLK	$249.60
EZB-1/4-25-1/2W-LIN	EZ-ROLL PLUS LINESET 1/4 X 1/2 25FT BLK	$132.80
EZB-1/2-25-1/2W-LIN	EZ-ROLL PLUS LINESET 1/2 X 1/2 X 25FT BK	$250.70
EZB-1/2-50-1/2W-LIN	EZ-ROLL PLUS LINESET 1/2 X 1/2 X 50 BLK	$471.00
EZB-3/8-50-1/2W-LIN	EZ-ROLL PLUS LINESET 3/8 X 1/2 X 50 BLK	$370.00
EZB-408-25-1/2W-LIN	EZ-ROLL PLUS M/S LINESET1/4L X 1/2S BLK	$553.00
EZB-3/4-82-1/2W-LIN	EZ-ROLL PLUS LINESET 3/4 X 1/2 X 82 BLK	$1,109.00

TUBING COVER

FORTRESS














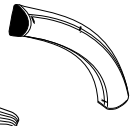
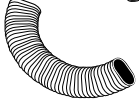



MODEL	SIZE	DESCRIPTION	L	W	H	LIST
LD-92-W	3-1/2	Ducting	96”	3-5/8”	2-5/8”	$78.70
LD-122-W	4-1/2	Ducting	96”	4-5/8”	3-1/4”	$102.30
LJ-92-W	3-1/2	Coupler	2-5/8”	3-7/8”	2-3/4”	$15.00
LJ-122-W	4-1/2	Coupler	2-5/8”	4-7/8”	3-1/2”	$15.40
LW-92-W	3-1/2	Wall Inlet	9”	4-3/8”	3-1/ 8”	$30.90
LW-122-W	4-1/2	Wall Inlet	9-3/4”	5-3/8”	4”	$40.10
LP-92-W	3-1/2	Soffit Inlet	3-1/2”	6”	4-7/8”	$35.30
LP-122-W	4-1/2	Soffit Inlet	3-1/2”	7”	5-1/2”	$46.00
LEN-92-W	3-1/2	End Fitting	4-1/4”	3-7/8”	2-3/4”	$16.90
LEN-122-W	4-1/2	End Fitting	4-1/4”	4-7/8”	3-1/2”	$21.90
LK-92-W	3-1/2	90° Flat Ell	5-3/4”	5-3/4”	2-3/4”	$31.00
LK-122-W	4-1/2	90° Flat Ell	6-1/2”	6-1/2”	3-1/2”	$40.30
LKF-92-W	3-1/2	45° Flat Ell	4-7/8”	4-7/8”	2-3/4”	$37.50
LKF-122-W	4-1/2	45° Flat Ell	6-1/2”	6-1/2”	3-1/2”	$48.80
LCI-92-W	3-1/2	90° Inside Vertical Ell	5-1/4”	5-1/4”	2-3/4”	$42.20
LCI-122-W	4-1/2	90° Inside Vertical Ell	5-1/4”	5-1/4”	3-1/2”	$54.90
LCO-92-W	3-1/2	90° Outside Vertical Ell	4-1/2”	4-1/2”	2-3/4”	$42.20
LCO-122-W	4-1/2	90° Outside Vertical Ell	5-1/4”	5-1/4”	3-1/2”	$54.90'
LCFI-92-W	3-1/2	45° Inside Vertical Ell	4-3/4”	3-7/8”	2-3/4”	$42.20
LCFI-122-W	4-1/2	45° Inside Vertical Ell	6-1/4”	4-7/8”	3-1/2”	$54.90
LCFO-92-W	3-1/2	45° Outside Vertical Ell	4-5/8”	3-7/8”	2-3/4”	$42.20
LCFO-122-W	4-1/2	45° Outside Vertical Ell	5-1/4”	4-7/8”	3-1/2”	$54.90
LT-92-W	3-1/2	Tee	7-3/4”	5-3/4”	2-3/4”	$55.80
LT-122-W	4-1/2	Tee	7-3/4”	6-1/2”	3-1/2”	$72.60
LDR-12292-W	3-1/2 -4-1/2	Reducer	3”	4-7/8”	3-7/8”	$30.90
LKS-92-W	3-1/2	90° Sweep Ell	13”	13”	2-3/4”	$39.10
LKS-122-W	4-1/2	90° Sweep Ell	14”	14”	3-1/2”	$51.00
LF-92-W	3-1/2	Flexible Ell	40”	3-1/2”	2-1/2”	$66.50'
LF-122-W	4-1/2	Flexible Ell	40”	4-1/2”	3-1/4”	$86.50
LFJ-92-W	3-1/2	Flexible Adaptor	3-1/8”	3-7/8”	2-3/4”	$23.60
LFJ-122-W	4-1/2	Flexible Adaptor	3-1/8”	4-7/8”	3-1/2”	$25.70'
LWF-92-W	3-1/2	Wall Flange	5”	6”	2-1/8”	$32.50
LWF-122-W	4-1/2	Wall Flange	6-1/2”	7-3/4”	2-5/8”	$42.20

Colours also available in Ivory, Brown and Grey - Special Order.

A/C ACCESSORIES

FORTRESS

CONDENSER BRACKETS & RISERS

PART	LIST
WALL CONDENSER BRACKET — Available in roof, wall, surface and suspension type brackets, Airtec provides the support to accommodate any style of installation. Heavy Duty steel construction assures strong secure support. Adjustible sliding frames and rubber mounts maximumize versatily to accommodate variations in width/depth of conventional condenser units. All weather protectiive finish assures long service life. **Min/Max mounting width:** 3"- 30" **Min/Max mounting depth:**10.5"- 16" **Overall Dimensions:** WBB300 H-18" W-33.5" D-22" WBB500 H-18" W-33.5" D-24" 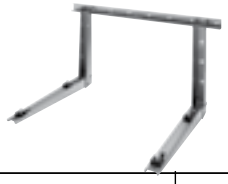	
WBB-300 (Wall Bracket, Weight: 5 Kgs, Max load: 136 Kgs)	$185.20
WBB-500 (Wall Bracket, Weight: 6.4 Kgs, Max load: 227 Kgs)	$280.80

PART	LIST
PLAROCK IVORY 4' RISERS 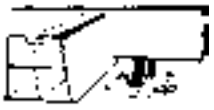 END CAP 	
PR351N-I (14' L 308 LB.)	$29.70
PRC-351N (4" Riser End Cap-pair)	$23.90

CONDENSATE HOSES & MISC. ACCESSORIES

PART	LIST
DRAIN HOSE  DH/DHQ 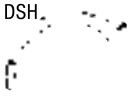 DSH	
DH-14 (LITE-164' coil)	-
DH-16 (STANDARD-164' coil)	$223.80

PART	LIST
Intermatic HVAC Surge Protective Device | 120/240 VAC | 4X Enclosure | 18" 10 Gauge Leads 	
AG3000-INT	$206.10

PART	LIST
SFS SADDLE FOR FLEXIBLE ELL (STAINLESS STEEL) 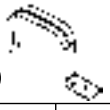	
SFS-140	
SFS-100	
SFS-77	$17.70
SL-300	$2.70
DY VENTED DRAIN WYE 	
DY-16	

PART	LIST
PIPE ADAPTOR  DSH-14-16V COUPLER  DSH-14J	
DSH-14-16V (PIPE ADAPTOR)	$18.50
DSH-14J (COUPLER)	
WALL SLEEVE NFP-75  INCLINED WALL SLEEVE FPS-65	
NFP-75 (3"×5"–7")	$28.40

RECTORSEAL

Mighty Bracket™

Clips to the mounting bracket of most mini-split brands in order to hold unit securely in place during installation without damaging walls.

- Allows single person installation
- Simple clip on support
- Does not damage walls.
- Use on all brands of mini-spilts

Part #	Description	LIST
97705	Mini-split support tool	$427.00



EQUIPMENT PADS

UltraLite® Pads

Strengthened by fiber-cement coating, flexes instead of cracking or breaking. The textured surface prevents unit slide and allows water drainage, while the engineered EPS core prevents warping and provides a solid bottom to resist settling. Unaffected by soil conditions, UV, temperature extremes, and other weather conditions.



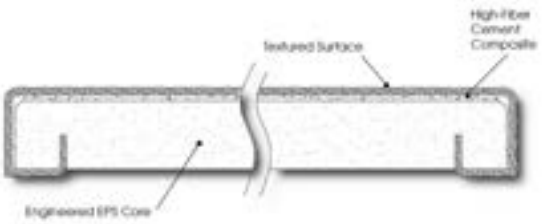

Part #	Size	Thickness	Allowable Total Load	LIST
UC1636-3	16” x 36”	3"	754 lbs.	$95.30
UC2424-3	24” x 24”	3"	595 lbs.	$119.60
UC2436-3	24” x 36”	3"	1071 lbs.	$158.90
UC2448-3	24” x 48”	3"	1547 lbs.	$202.00
UC3030-3	30” x 30”	3"	1071 lbs.	$179.20
UC3036-3	30” x 36	3"	1309 lbs.	$188.90
UC3232-3	32” x 32”	3"	1230 lbs.	$200.80
UC3237-3	32” x 37	3"	1428 lbs.	$191.90
UC3636-3	36” x 36”	3"	1547 lbs.	$257.70
UC3642-3	36” x 42”	3"	1704 lbs.	-
UC3648-3	36” x 48”	3"	2023 lbs	$289.70

AIR CONDITIONER BRACKETS

• For hanging A/C condensers & heat pumps on vertical walls

Part #	Description	Max Load	LIST
SM003	21" A/C bracket (pair)	260	$82.10
MB30	30" A/C bracket (pair)	400	$83.30
MB36	36" A/C bracket (pair)	375	$97.40
MB42	42" A/C bracket (pair)	350	$110.90



WALL THIMBLES

Thermo-Thimbles

The pro way to run A/C line sets, electrical and thermostat wires through walls! Add a professional look to through-the-wall installations!

FEATURES:

- Creates a permanent, air-tight seal through walls.
- Temporary plug keeps out air, insects and other pests.
- No ugly holes to patch.
- For new construction or retrofit.
- Flange pre-marked for nails or screws.
- No snagged line sets.



Part #	Description	LIST
44002	Round Thimble Kit, 2-7/8" dia. up to 12" wall	$48.80
44005	Round Thimble Kit, 4-7/8" dia. up to 12" wall	$148.90

DUCT HEATERS
THERMOLEC

How to Order:

Contact your nearest Refrigerative Supply office for unit specifications

Duct Dimensions		Capacity*	Control Voltage	Frame	Control Components
Rectangular	Round				
up to 48"W x 24"H	Up to 12" diameter	up to 62KW at 600V / 3PH	24V	**Standard** Slip-in type (SC) supplied unless otherwise specified **Optional** - Flange type (FC) - Round type (RFC) - Protective screens (on any frame type) option S1 or S2	**Standard** - Thermal cut-outs - Magnetic contactors - Control circuit transformer - Supply & control terminals **Optional** - Airflow probing device - option D - Toggle disconnect switch - option X

Standard Dimensions:

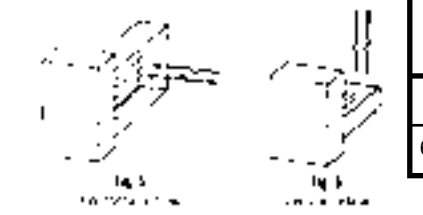

Duct Height	Depths	
	"d"	"D"
9" to 18"	5"	11"
6", 7" & 8"	max. 10"	max. 17"

Exclusive All-Round Applicability:

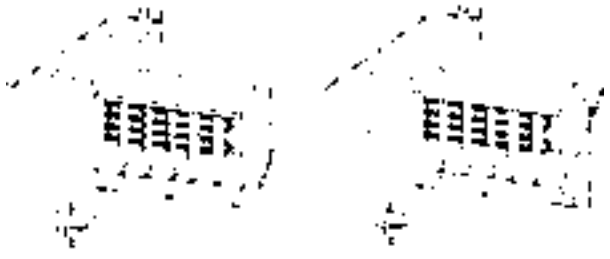

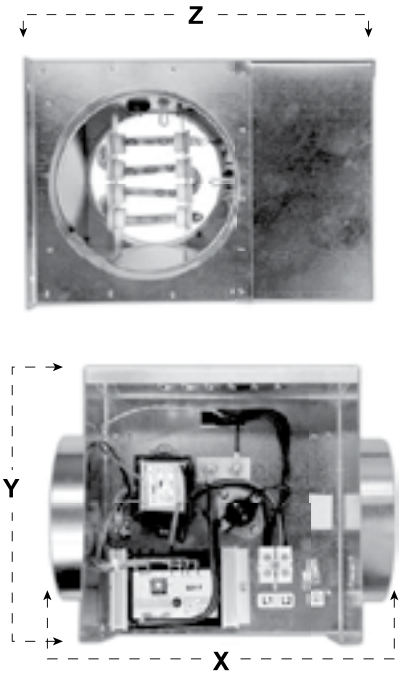

DIMENSIONS (3 frame sizes available)			
SIZE	X	Y	Z
A	11.5"	8.0"	11.5"
B	11.5"	10.0"	13.5"
C	15.5"	12.0"	15.5"

To specify the model required, follow the example below:

TER-6-2-240

COLLAR SIZE — KILOWATTS — VOLTAGE

AVAILABLE STOCK MODELS:

COLLAR SIZE	KW	**VOLTAGE**/AMPS	Min. CFM	FRAME SIZE
5" or **6**"	**1**	**240V**/4.2A or **208V**/4.8A or **120V**/8.3A	30	A
5" or **6**"	**2**	**240V**/8.3A or **208V**/9.6A or **120V**/16.7A	60	A
8" or **10**"	**3**	**240V**/12.5A or **208V**/14.4A	90	B
8" or **10**"	**4**	**240V**/16.7A or **208V**/19.2A	120	B
8" or **10**"	**5**	**240V**/20.8A or **208V**/24.0A	150	B
8" or **10**"	**6**	**240V**/25.0A	180	B
12"	**6**	**240V**/25.0A	180	C
10" or **12**"	**8**	**240V**/33.3A	240	C
10" or **12**"	**10**	**240V**/41.6A	300	C
10" or **12**"	**12**	**240V**/47.9A (11.5KW)	345	C

Specifications are for standard units.
For other sizes, voltages and capacities, please contact your Thermolec representative.

MINI-SPLIT CONDENSATE PUMPS



Little Giant EC-1 Series Condensate Removal Pump

- Improved noise reducing design and reliable solid-state switching technology
- The two piece design allows the reservoir to be placed within the air handler while the pump-controller is located outside the air handler
- 21 dB(A) - Quiet Operation
- Shut Off: 33'
- Easy to install brackets



EC-1K Series Condensate Removal Pump Kit

A special version of the unique EC-1 mini condensate pump that includes Line Set covers for mounting the pump on the interior wall, next to the indoor ductless mini split air conditioner. Can be installed on either the right- or left-side of the air conditioner.

Part #	Volts	LIST
553510	115	



Little Giant Mini-Split Pump

- Unique design reduces vibration and operating noise
- Quieter starts and stops
- Includes audible alarm
- External mount for easy maintenance

Part #	Volts	LIST
553712	230	$370.00

DIVERSITECH



ClearVue™ Mini Condensate Pump

ClearVue™ Mini is the ideal condensate pump for ductless (mini-split) systems. Its compact size helps it fit almost anywhere including inside many wall cassette units and inside line set cover systems. And the whisper quiet operation makes it easy to live with even when the pump is installed near living areas.

Part #	Volts	Lift	LIST
CVMINI	120/240	35 Feet	$508.00



Aspen Mini White Condensate Pump

- Surface mounts below evaporator at either end
- Self-priming, automatically operates on water rise
- External mount allows for easy cleaning of filter cartridge
- Capacity: 2.8 GPH @0' and 0.8 GPH @33' head
- Quiet - only 21 db(A)

Part #	Volts	LIST
MB-UNI	150/230	$479.00



Aspen Lime Mini-Split Pump

- Fits Aspen Slimline 2" Profile
- Mini — 3.7 GPH @ 0' and 0.8 GPH @ 26'
- Self-leveling, self-priming pump
- Automatically operates on water rise
- Quiet operation: Mini — 23 dB(A)

Part #	Volts	LIST
ML-UNI	115/230	$600.00



Aspen Orange Mini-Split Condensate Pump

- Fits any mini-split up to 24,000 BtuH
- Installs inside evaporator, remotely above ceiling or inside lineset cover
- 3.7 GPH @ 0' and 0.8 GPH @ 26'
- Self-priming, suction lift to 4 feet
- Automatically operates on water rise
- Equipped with optional alarm
- Quiet operation: 33 dB(A)

Part #	Volts	LIST
MO-UNI	115/230	$459.00



Aspen Aqua Mini-Split Condensate Pump

- Fits any mini-split up to 24,000 BtuH
- Ultraslim profile fits inside any evaporator or lineset cover
- 3.7 GPH @ 0' and 0.8 GPH @ 26' head
- Self-priming, suction lift to 4'
- Automatically operates on rise

Part #	Volts	LIST
MA-115/230	115/230	$505.00



Condensation Control System

- Prevents the overflow of an evaporator condensation pan
- Interrupts 24VAC thermostat output when water is detected
- Typical applications include package units, vertical coils, split systems, slant coils and water heaters
- Automatically resets after water is removed

Part #	Description	LIST
ICM340	Condensation Control	$123.70
ICM345	Overflow Alarm	$77.40

MINI-SPLIT CONDENSATE PUMPS

Aspen Pumps Mini White Silent+ Condensate Pump



- The Silent+ ultra slim pumps is designed to mount discreetly, in the shadow line, below a high wall unit. The pump speed adjusts with the flow rate to provide quiet operation and optimum performance.
- Ultra quiet operation
- Low profile design allows installation above a door
- Reversible position on the left or right for installation flexibility
- Capacitance technology for soft start and variable flow rate
- 5A volt-free high level safety wires, NC/NO contacts rated @ 5A inductive @ 230V AC

Part #	Volts	LIST
83930-REC	100-250	$479.00

Aspen Pump Aqua Series



- Aqua Series pumps are designed with separate pump and reservoir. The 2 elements are connected together with a length of 1/4" id vinyl tube and a communication cable, both of which are usually around 6 feet long.
- Ultra-slim profile and Integral hanging loop and separate reservoir facilitates attachment in vertical applications
- Self Priming
- Modular terminals for fast connection
- Quiet and Fully potted (complete assembly is epoxy filled for resistance to shock, vibration, moisture, chemical and promotes sound dampening, US Patent #6,817,194)
- 3A NO/NC dry contacts rated @ 5A inductive at 230V AC

Part #	Volts	LIST
ASP-MA-230SP-REC	208-230	$698.00

Refco GOBI II Condensate Pump with 5' Cord



- Universal use due to wide range of applications
- Warranty period only starts with commissioning (readable via USB)
- 11 gallon pumping capacity per hour
- 65 ft delivery head
- <19 dB noise level
- No float problems thanks to digital sensor
- Demand-oriented control of the pumping capacity
- Spare parts available

Part #	Volts	LIST
3004145-GES	100-240	$635.00

DiversiTech 24' Lift Low Profile Mini-Split Condensate Pump

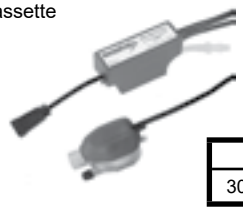

- Compact Size
- Flexible installation options. Fits inside line set covers or inside cassette
- Clear Reservoir
- Dual Outlet Reservoir
- Reservoir Mounting Plate
- Up to 6' Suction Lift – 24' Total Lift
- For systems up to 2.8 tons (34,000 BTUs – 10kW)
- Quiet. < 21dB(A)
- Thermally Protected
- Built-IN Overflow Switch – SPDT Alarm Circuit
- 2 Year Warranty
- ETL Listed
- Water Resistant Sensor Cable

Part #	Volts	LIST
3004145-GES	230	$379.00

Little Giant ACS-5 Secondary Condensate Overflow Switch



- Installs in confined spaces
- Reliable mechanical switch and solid, polymer float
- Can be installed on A/C equipment overflow drain outlet or primary/secondary auxiliary drain pan outlet
- Shuts off equipment when clog or blockage backs up condensate water in drain line
- Can simultaneously be connected to a warning light or audible alarm circuit or
- BMS/BAS system to send a signal in addition to shut off equipment
- Dual contacts allow NO and/or NC operation (additional lead wire required if both circuits used)
- Includes two 18 gauge, 6' leads
- Includes schedule 40 PVC 3/4" 900 housing and 3/4" MNPT x 3/4" male slip adapter to fit standard 3/4" equipment/pan outlets
- Suitable for 24 VAC Class 2 (thermostat) circuit
- 5 amp switching capacity
- Complies with applicable building codes

Part #	Volts	LIST
14940157-FEC	24 VAC	$62.70

MINI-SPLIT CONDENSATE PUMPS



EZ Trap 113B 3/4" CRS Trap Kit W/Brush

- Transparent Trap is easy to clean and easy to inspect
- Quality construction with durable schedule 40 PVC fittings
- Watertight red caps provide easy access to clean the trap and drain pan outlet

Part #	LIST
EZT113BEZT113B-REC	$42.60



Rectorseal Safe-T-Switch SS2 Condensate Overflow Switch

- The 97637 Safe-T-Switch SS2 Condensate Drain Pan Overflow Kit can be Installed on the Auxiliary Outlet of the Primary Drain Pan to Detect Clogged A/C Condensate Drains and Shut Down the System. The Patented Magnetic Reed Switch Allows it to be Installed Off-Center and Still Function Correctly
- Maximum control
- Maximum reliability
- Unmatched function
- Minimum maintenance
- Simple installation

Part #	LIST
SS2-REC	$57.00



DiversiTech 24VAC Wet Switch Flood Detector

- The WS-1 Wet Switch Flood Detector is a Solid State Control that is Designed to Help Prevent Flooding and Damage to Carpet, Walls, Ceilings and Furniture. This Detector has a Built-in Test and Reset Button for Easier Installation and Automatically Turns the System off when it Detects Moisture due to Condensate or Drain Leaks

Part #	Volts	LIST
WS-1-ALL	24 VAC	$208.80



DiversiTech 24V Condensate Cop Drain Pan Switch

- The CC-1 Condensate Cop Drain Pan Switch is a Unique, Clamp-on Float Switch that Fits Easily over the Edge of all Types of Drain Pans, Including Formed Plastic and Galvanized Sheet Metal. A Separate Float/Probe Assembly Swivels to Accomodate Drain Pans with Sloped Sides

Part #	Volts	LIST
CC-1-ALL	24 VAC	$63.10

TANK-TYPE CONDENSATE REMOVAL PUMPS

LITTLE GIANT

VCMX Series - NXTGen™

- Slimmer Footprint: 4.8" x 10.2" x 6.5" size
- Oil Resistant Tank and Check Valve
- 1/4-Turn Check Valve
- External Overflow Safety Switch
- External Test/Run Lever
- External Tank Anti-Sweat Sleeve
- Multiple Brackets: steel mounting bracket for use on either side of the tank
- 20' Shut-off head (115v Models)
- 6' power cord
- Two-Year Warranty



Part #	Model #	Volts	HP	Cord	GPH @ 1'	LIST
554550	VCMX-20ULST	115	1/30	6'	84	$166.90
554551	VCMX-20ULST	230	1/30	6'	80	$184.20

VCCA Series

1/3 gallon ABS tank, stainless steel motor shaft, 3/8" OD barbed discharge, 6' power cord and thermal overload protection.

VCMA Series

1/2 gallon ABS tank, stainless steel motor shaft, 3/8" OD barbed discharge, 6' power cord and thermal overload protection.

VCL Series

1 gallon ABS tank, stainless steel motor shaft, 3/8" OD barbed (3/8" OD copper tube discharge on VCL-45 series) discharge, 6' power cord and thermal overload protection.

Legend

V	Vertical
C	Condensate Removal - (VCC Model Compact)
M	Medium Tank
A	Advanced
L	Large Tank
UL	cCSAus
S	Safety Switch
T	Tubing







Part #	Model #	Volts	HP	Cord	GPH @ 1'	LIST
554201101	VCCA-20ULS	115	1/30	6'	80	$213.50
554202101	VCCA-20ULS**	230	1/30	6'	80	$193.70
554415	VCMA-15ULST	115	1/50	6'	65	$150.80
554411	VCMA-15ULT	115	1/50	6'	65	$140.90
553101	VCL-14ULS	115	1/50	6'	200	$364.00
553201	VCL-24ULS	115	1/18	6'	270	$380.00
553211	VCL-24ULS	230	1/18	6'	270	$404.00
553240	VCL-45ULS	115	1/5	6'	450	$892.00
553245	VCL-45ULS	230	1/5	6'	450	$980.00

**230V VCCAs and VCMAs have 17' shut-off head

ELECTRONIC & IN-PAN CONDENSATE REMOVAL PUMPS

LITTLE GIANT

TP Series:

For single/multi-split ductless wall units, cassettes, ceiling mount, console or fan coils, all units are cCSAus certified.



Part #	Model #	Volts	Max Flow GPM	LIST
553674	TPS	230	2.5	$497.00
553676	TPR	230	2.5	$617.00

ABS Series:

New and redesigned, the ABS Series features a reliable Little Giant® Submersible pump fitted with an advanced switch for automatic operation. The new switch has a low profile design with solid state technology. The float switch housing is easily separated for service and cleaning. All units are cCSAus certified.



1-ABS: Designed for in-pan mounting, 1/4" MNPT discharge with On Level - 1.75", Off Level - 1.00", 10' shut-off.

2-ABS: 1/2 gallon tank, 1/4" MNPT discharge, with On Level - 3" Off Level - 2", 11.8' shut-off.

3-ABS: 1 gallon tank with On Level - 4.5" Off Level - 3.5", 1/2" MNPT discharge with check valve for 1/2" OD rigid plastic or copper tubing, 26' shut-off.



Part #	Model #	Volts	HP	Cord	GPH @ 1'	LIST
550521	1-ABS	115	1/150	9'	205	$382.00
550532	1-ABS	230	1/150	11'	205	$401.00
551020	2-ABS	115	1/40	9'	300	$442.00
551320	3-ABS	115	1/12	9'	310	$841.00

EVAPORATIVE COOLER PUMPS

LITTLE GIANT

Evaporative Cooler Pumps

Designed to circulate water in evaporative cooler equipment. Pumps are rated to operate based on CFM:

CP1 - for coolers between 5000 and 7500 CFM
CP2 - for coolers between 7500 and 15000 CFM
CP3 - for coolers between 15000 and 21000 CFM



Part #	Model #	Volts	HP	Cord	GPH @ 1'	LIST
540005	CP1-115	115/127	1/70	4'	307	$124.70
540015	CP1-230	230	1/70	4'	307	$134.40
541005	CP2-115	115	1/50	4'	502	$145.10
541015	CP2-230	230	1/50	4'	502	$160.20

Accessories: Cooler Pumps

Part #	Description	LIST
599085	FV-2 - Float Valve	**$29.70**

Check Valves—Condensates:



Part #	Model #	Description	LIST
599061	CV-2	Check valve for models 1-ABS, 2ABS	$42.70
599064	CV-35	Brass check valve for VCL-45ULS	$74.60
599065	CV-10	Check valve for VCC, VCM, VCMA, VCL-14/24. 1/4" MNPT to 3/8" ID vinyl tubing.	$23.30

Ice Machine Replacement Pump:

Generic replacements for OEM ice machine pumps.

Part #	Model #	Volts	HP	Cord	GPH @ 2'	LIST
545600	RIM-U (universal)	115/230	1/25	3'	**	$273.60



SMALL SUBMERSIBLES



Oil-Filled:

These pumps feature an oil-filled motor housing with a radial lip seal on the motor shaft. They have an exceptional life expectancy because oil serves as a continuous lubricant for all the moving parts and the shaft seal. This non-toxic dielectric oil, often paired with an aluminum, cast iron or plastic housing, also helps dissipate the heat build-up found in a continuous-running pump.



Part #	Model #	Description	HP	Cord	GPH @ 1'	LIST
500286	1-AT	115 V, 60 Hz	1/200	10'	170	$358.00
501086	1-T	115 V, 60 Hz	1/150	10'	205	$417.00
501020	1-Y	115 V, 60 Hz	1/150	6'	205	$503.00
504203	4E-34NR	115 V, 60 Hz	1/12	6'	810	$1,083.00
504186	4E-34N	115 V, 60 Hz	1/12	10'	710	$1,021.00
502286**	2E-38NT	115 V, 60 Hz	1/40	10'	300	$504.00
503203**	3E-12NR	115 V, 60 Hz	1/15	6'	670	$846.00
503186	3E-12NT	115 V, 60 Hz	1/15	10'	500	$782.00
503603**	3E-34N	115 V, 60 Hz	1/15	10'	670	$770.00



**= In-line or submersible dual-purpose pumps

Epoxy Encapsulated Pumps:

Epoxy filled pumps are compact in design, energy efficient, and have a corrosion-resistant plastic housing.



Part #	Model #	Description	HP	Cord	GPH @ 1'	LIST
518087**	1-EA-42	115 V, 60 Hz	1/125	10'	170	$363.00
566608	PE-1F-PW	115 V, 60 Hz	1/125	6'	170	$274.50

**= In-line or submersible dual-purpose pumps

AQUARIUM PUMPS

Little Giant® Aquarium series magnetic drive pumps are specifically designed for salt water and fresh water aquarium circulation and filtration applications.

Part #	Model #	Description	HP	Cord	GPH @ 1'	LIST
580506	2-MDQ-SC	115 V, 60 Hz	1/30	6'	510	$880.00
581506	3-MDQ-SC	115 V, 60 Hz	1/15	6'	700	$1,194.00
582507	4-MDQX-SC	115 V, 60 Hz	1/10	6'	1325	$1,292.00



MAGNETIC DRIVE PUMPS

LITTLE GIANT

MD Series:

Magnetically driven pumps for mildly corrosive chemicals and solutions. The Little Giant® MD Series features leakproof, seal-less magnetic drives and are designed for in-line, non-submersed use.





Part #	Model #	Description	HP	Cord	GPH @ 1'	LIST
588001	1-AA-MD	115 V, 50/60 Hz	1/200	3'	160	$415.00
589002	1-MD	115 V, 60 Hz	1/70	6'	180	$654.00
580002	2-MD	115 V, 50/60 Hz	1/30	6'	510	$774.00
581002	3-MD	115 V, 60 Hz	1/20	6'	546	$949.00
582002	4-MD	115 V, 60 Hz	1/12	6'	690	$1,118.00
583002	5-MD	115 V, 50/60 Hz	1/8	6'	905	$1,683.00

MD-SC Series:

Magnetically driven pumps for semi-corrosive chemicals and solutions. The Little Giant® MD-SC series features leakproof, seal-less magnetic drives and are designed for in-line, non-submersed use. These pumps feature polypropylene, ceramic and Nitrile parts.





Part #	Model #	Description	HP	Cord	GPH @ 1'	LIST
580503	2-MD-SC	115 V, 50/60 Hz	1/25	6'	510	$894.00
581503	3-MD-SC	115 V, 50/60 Hz	1/12	6'	750	$1,011.00
581509	3-MDIX-SC	115 V, 60 Hz	1/15	6'	1100	$977.00
582503	4-MD-SC	115 V, 50/60 Hz	1/10	6'	850	$1,223.00
582514	TE-4-MD-SC	230 V, 50/60 Hz	1/10	6'	850	$1,405.00
583503	5-MD-SC	115 V, 50/60 Hz	1/8	6'	1050	$1,718.00
584504	TE-5-MD-SC	115/230 V, 50/60 Hz	1/8	6'	1200	$2,536.00

MD-HC Series:

Magnetically driven pumps for highly corrosive chemicals and solutions. The Little Giant® MD-HC series features leakproof, seal-less magnetic drives and are designed for in-line, non-submersed use. These pumps feature polyphenylene sulfide, Fluoroelastomer (FKM), carbon and ceramic parts.





Part #	Model #	Description	HP	Cord	GPH @ 1'	LIST
581604	TE-3-MD-HC	115 V, 50/60 Hz	1/25	6'	590	$1,369.00
581614	TE-3-MD-HC	230 V, 50/60 Hz	1/20	6'	590	$1,495.00
582604	TE-4-MD-HC	115 V, 50/60 Hz	1/10	6'	850	$1,658.00
583603	5-MD-HC	115 V, 50/60 Hz	1/8	6'	1050	$1,961.00

UTILITY PUMPS
LITTLE GIANT

Pony Pump® Series:

Non-submersible self-priming transfer pumps. Both in 115 V and 12 VDC, these models are designed to operate 15 minutes per hour.



5 Series:

1/6 hp Submersible Sump/Utility Pump with cast aluminum housing, plastic base, bottom sump-type pick-up with removable plastic screen, pumps down to 1/8", thermal overload protection, 1" FNPT discharge with a garden hose adapter.



Part #	Model #	Volts	HP	Cord	GPH @ 1'	LIST
505176	5-MSP	115	1/6	18'	1200	

WATER REMOVAL SYSTEMS

WRS-6:

Drainosaur® includes 5 gallon polypropylene tank and lid with 1-1/2" side intake port, 1-1/2" top discharge port and 2" FNPT top vent port, 1/3 hp automatic pump. Completely assembled and ready to be installed. IAPMO approved basin.



Part #	Model #	Volts	HP	Cord	GPH @ 5'	LIST
506055	WRS-6	115	1/3	8'	45	$1,054.00

SUMP/EFFLUENT PUMPS

6EN Series:

1/3 hp Submersible Sump/Effluent Pump designed to handle 1/2" solids. Cast iron housing, thermoplastic base, cover and impeller, thermal overload protection and 1-1/2" FNPT discharge. “RFSN” version features a remote float switch with “piggyback plug”. Snap-action float switch on the “SFS” models. “On” level at 7" to 10" and “off” level at 2" to 5".



Part #	Model #	Volts	HP	Cord	GPH @ 5'	LIST
506630	6EN-CIA-SFS	115	1/3	10'	50	

10EN Series:

1/2 hp Submersible Sump/Effluent Pump designed to handle 1/2" solids. Cast iron housing, thermoplastic base, cover and impeller, thermal overload protection and 1-1/2" FNPT discharge.



SUMP PUMPS
LITTLE GIANT

5.5 Series:

Snappy John® 1/4 hp submersible sump pump designed to handle 3/8" solids. Zinc housing, glass-filled polypropylene base and cover, non-clog nylon impeller, thermal overload protection, 1-1/4" FNPT discharge with garden hose adapter and snap-action float switch. “On” level at 7" to 10" and “off” level at 2" to 5".



6 Series:

1/3 hp submersible sump pump with cast iron housing, polypropylene base, polycarbonate cover, and thermal overload protection. “CIA” models have integral diaphragm switch with “on” level at 7" to 10" and “off” level at 1" to 4". The 6-CIA-RS has a piggyback diaphragm switch with same “on/off” ranges. “RFS” models have piggyback remote float switches. 1-1/2" FNPT discharge with 1-1/4" FNPT adapter. Manual versions include a garden hose adapter.



Part #	Model #	Volts	HP	Cord	GPH @ 5'	LIST
506158	6-CIA	115	1/3	10'	46	$628.00
506171	6-CIA-RFS	115	1/3	10'	46	$668.00
506271	6-CIM-R	115	1/3	10'	46	$596.00
506274	6-CIM-R	115	1/3	25'	46	$604.00

Cast Bronze 8 Series:

4/10 hp submersible sump pump with cast bronze housing, polypropylene base, polycarbonate cover, thermal overload protection. “ 1-1/2" FNPT discharge with a 1-1/4" FNPT adapter.



Part #	Model #	Volts	HP	Cord	GPH @ 5'	LIST
508257	8-CBM	115	4/10	10'	54	**$1,585.00**

EFFLUENT PUMPS

9EN Series:

4/10 hp Submersible Sewage Pumps designed to handle 3/4" solids. Permanent split capacitor (PSC) motor, heavy-duty cast iron housing, volute and cover, non-clog thermoplastic elastomer impeller and thermal overload protection.



CARBONATOR PUMPS
PROCON

Carbonator Pumps



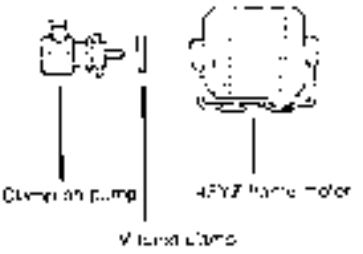

Part #	Description	LIST
CO-1504-AFZ (102A100S12XX)	For Pumping Refrigerant (100GPH)	$1,175.00
CO-1504-X (112A100F11BA)	For Pumping Water (100GPH)	-
1113	V-Band Mounting Clamp	$10.80

Carbonator Pump Motors

Carbonator pump motors are designed for use on carbonator pumps, utility pumps, direct drive gear and vane type pumps.

• 1725 rpm, reversible rotation



Part #	HP	Volts	Amps	LIST
CB2024AV1	1/4	115	4.4	$628.00
CB2034AD	1/3	115/230	4.6 / 2.3	$678.00
CB2054AD	1/2	115/230	6.8 / 3.4	$830.00

PNEUMATIC CONTROLS

HONEYWELL

This section shows a small portion of our Pneumatic product offering. We carry a large variety of parts for new installations and replacement.

Please contact your nearest branch for pricing and availability on any of your Pneumatic requirements.

TP970 and TP971 Series Thermostats

Honeywell offers the most accurate, reliable full line of Pneumatic thermostats for new construction, modernization and retrofit. TP970 thermostats supply proportional control of Pneumatic valves and actuators for all of the following applications:

The TP970 Series Pneumatic Thermostats are one, two or three-pipe, proportioning thermostats with bimetal elements. They are suitable for controlling dampers and/or valves in HVAC systems.

Part #	Description
TP970A2234-HON	Direct Acting 2-PIPE STAT 15-30C SCALE single set point
TP970A2020-HON	Direct Acting 2-PIPE STAT 15-30C SCALE single set point
TP970B2010-HON	Reverse Acting 2-PIPE STAT 15-30C SCALE single set point
TP971A2011-HON	Direct Acting 2 Temp, 2-Pipe Stat 15 to 30 C. Day & 10 to 27C. Night dual S/P
TP971A2029-HON	Direct Acting 2 Temp, 2-Pipe Stat 15 to 30 C. Day & 12 to 24 F. Night dual S/P
TP971A2102-HON	Direct Acting 2 Temp, 3-Pipe Stat 15 to 30 C. Day & 12 to 24 F. Night dual S/P c/w cover
TP971C2058-OEM	Same as a TP971A2011 in Celsius & Fahrenheit



Stat Covers & Accessories

Stat covers for the TP970 series Pneumatic thermostats come several variations: Blank, Celsius & Fahrenheit scale, vertical and horizontal.

Part #	Description
14004406-910C	Satin Chrome, Vertical, Set Point & room Temp,15-30°C. Range
14004406-310-HON	Satin Chrome, Vertical, Set Point & room Temp, 60-90°F. Range



Pneumatic Temperature Sensors

The LP915A Pneumatic Temperature Sensors is a direct acting, proportional-type for use with a Pneumatic controller in HVAC systems to control valves and dampers.

The LP915A has a liquid-filled averaging element for duct mounting and as an alternative the LP914A has a rod and tube insertion element for duct, well or through-the-wall-mounting.

Part #	Description
LP915A1044-HON	Temp Sensor, D/A, 0-200 F. 18' ELEMENT
LP915A1051-OEM	Temp Sensor, D/A, 0-200 F. 8' ELEMENT



PNEUMATIC CONTROLS

HONEYWELL

TG5 Universal Thermostat Guard



Transparent polycarbonate cover (smoke tint) ring base and Allen wrench.
Available with in small, medium, and large sizes and with a clear or painted steel cover.

Part #	Description
TG510A1001-HON	Clear locking stat cover designed for TH510A1001, TH510D1005, TH511A1000 TH511D1004, TH512A1009, TH512D1003

Airstream Insertion Thermostat



The LP907A Airstream Insertion Thermostat is most commonly used as a discharge controller in unit ventilator applications. Other applications include a limit device when used with other controllers and as a proportioning type controller for Pneumatic valves and dampers in fan room applications. When used as limit controllers, they provide a “submaster action” caused by over control during light load conditions.

Part #	Description
LP907A1002-HON	SMALL CLEAR THERMOSTAT GUARD

SP970A Manual & Minimum Position Pressure Regulator



The SP970 manual & minimum pressure regulator provides regulated pressure to a control device such as a Pneumatic damper operator. The SP970 supplies ether a manually set pressure or a manually set minimum pressure with a variable maximum pressure.

Part #	Description
SP970A1005-HON	10# SPAN, MIN OR MAN.POSITION SW
SP970A1013-HON	5# SPAN, MAN.OR MIN.POS.SWITCH

PNEUMATIC CONTROLS
HONEYWELL

MP953 Pneumatic Actuators

MP953 Pneumatic Actuators operate V5011 and V5013 Valves to provideproportional control of steam or hot and cold liquids of HVAC systems.



Part #	Description
MP953C1000-HON	5”, 2-7 #, 3/4” Trvl., N/O AirStem-Up
MP953C1018-HON	5”, 8-12#, 3/4” Trvl., N/O AirStem-Up
MP953C1026-HON	5”, 4-11#, 3/4” Trvl., N/O AirStem-Up

MP909D Pneumatic Damper Operator

The MP909D Pneumatic Damper Operator provides proportional control of variable volume terminal units, mixing boxes, and small dampers. Choices of shaft end connections provide versatile mounting and hardware connection options.



Part #	Description
MP909D1201-HON	ACTUATOR, 50-140F, 3-8 PSI
MP909D1219-HON	ACTUATOR, 50-140F, 8-13 PSI
MP909E1026-OEM	ACTUATOR, -28-160F, 3-13 PSI
MP909E1034-HON	ACTUATOR, -28-160F, 5-10 PSI
14003640-001-HON	MTN BRACKET FOR MP909

RP418A-C & RP818A, B Electric/Pneumatic Relays

The RP418 and RP818 Electric/Pneumatic Relays are solenoid valves that open and close the air supply to Pneumatic controls. The control input is an on/off line voltage signal to the RP418A-C and 24V ac signal to the RP818A and B.

Part #	Description
RP418A1107-HON	120V 60HZ E-P RELAY, W/ JUNCTION BOX
RP418B1071-HON	120V,OPEN COIL, EP RELAY
RP818A1004-HON	24V Surface Mt. E/P Relay w/Spl.Bx.
RP819B1002/U	24V Panel Mounted Electric Pneumatic Relay



PNEUMATIC CONTROLS
HONEYWELL

VP525C Pneumatic Radiator Valves

The VP525C Pneumatic Radiator Valves are normally open, single-seated valves with straight-through or angle-body construction. The VP525C rating is 240°F (116°C).

Part #	Description
VP525C1016-HON	1/2” ST Male Union N/O, 3-10#, 2.0CV
VP525C1024-HON	3/4” ST MALE UN, N/O, 3-10#, 3.0CV
VP525C1032-HON	3/4” ST MALE UN, N/O, 3-10#, 5.0CV
VP525C1040-OEM	1/2” ANGLED MALE UN N/O 3-10# 2.0CV
VP525C1057-HON	3/4” ANGLED MALE UN N/O 3/10# 3.0CV
VP525C1065	3/4” ANGLED MALE UN N/O 3-10# SPRING 5.0 CV
14003118-001-HON	VP525A REPAIR KIT 3/4” CV 5.0
14003299-001-HON	VP525A REBUILD KIT 1/2” SWEAT
14004897-003-HON	TOP & INSERT FOR 525C 3/4” 3cv
14004623-001-HON	STEM BUTTON ONLY, NO SET SCREW

RP7517A, B Electronic-Pneumatic Transducers

The RP7517A Electronic-Pneumatic Transducer is used in electronic-pneumatic control systems to convert a proportional electric output signal from a controller into a direct-acting, proportional pneumatic signal.

The RP7517A is powered by the control signal. It is available with a cover or without a cover for panel mounting (the panel model has a higher pressure output than the cover model and is approximately equal to the RP7517B in branch line buildup).

Part #	Description
RP7517A1017-HON	E/P TRANSDUCER PANEL MOUNT





Refrigerated Air Dryers for Pneumatic Control Systems

The A-4400 series refrigerated air dryers are designed for continuous operation to supply dry air to Pneumatic control systems. All components are selected and assembled to provide dependable service over a long period of time with a minimum amount of maintenance.
There are six models available, models can be ordered with or without an optional factory mounted air purification system. For air dryers not equipped with and optional factory mounted air purification system, a properly configured air supply system must include a coalescing oil removal filter as well as an activated carbon oil vapor removal filter.

Specifications:

Electrical Rating: 115 volt
Current Draw: 5.75 amperes
Ambient Operating
Temperature Limits: 40 to 115°F (4 to 46°C) with maximum dew point of 86°F (30°C), non-condensing

UL Listed and CSA approved.

Part	Flow Capacity at Rated Condition scfm (L/s)[a]	Air Purification System	Shipping Weight (lb)	LIST
A-4412-1	12 (5.7)	yes	72	$17,245.00
A-4412-2	12 (5.7)	no	67	$11,991.00
A-4417-1	17 (8.0)	yes	78	$18,000.00
A-4417-2	17 (8.0)	no	73	-
A-4423-1	23 (10.9)	yes	78	$23,992.00
A-4423-2	23 (10.9)	no	72	$16,503.00



(a) The rated condition is 20 psig (140 kPa) supply pressure, 100°F (38°C) saturated inlet air temperature, 100°F ambient temperature, and 80 psig inlet pressure.

A-4400 Series Refrigerated Air Dryers Replacement Parts:

Part	Description	LIST
G-2010-5	system pressure gauge	$140.50
A-4300-600	service bypass valve	$1,108.00
A-4000-148	coalescing filter: complete assembly for air dryer model A-4412	-
A-4000-149	coalescing filter: complete assembly for air dryer model A-4417 and A-4423	-
A-4110-604	filter element with o-rings for air dryer model A-4412	$336.00
A-4000-604	filter element with o-rings for air dryer model A-4417 and A4423	$336.00
A-4000-620	universal o-ring kit for filter element bowl	$144.00
A-4000-610[b]	replacement drain valve	-
A-4000-632	carbon filter element only: for air dryer model A-4412	$1,243.00

(b) An F-400-20 coupling (1/8 in. external NPT x 1/8 in. internal NPT) is included with the replacement drain valve.

PNEUMATIC CONTROLS
JOHNSON CONTROLS

Oil Removal Filters


A-4000-1037

Combining coalescing and activated carbon filters in series provides clean, oil free air by removing both oil aerosols and vapors in Pneumatic control systems.
Note: The air supply to this filter combination must be from a properly broken-in-air compressor producing less than 6 ppm aerosol oil (as measured bya Johnson Controls A-4000-120 Oil Indicator on the compressor tank outlet) and must also pass through a properly operating air dryer.


A-4000-148


A-4000-149


A-4000-601


A-4000-610

Part	Description	Connection	LIST
A-4000-1037	inline filter	1/4 in. barb	$148.30
A-4000-148	coalescing filter: nominal scfm 10; max scfm 17	3/8 in. NPT	-
A-4000-149	coalescing filter: nominal scfm 20; max scfm 30	3/8 in. NPT	-
A-4000-601	coalescing filter: nominal scfm 40; max scfm 50	3/8 in. NPT	$895.00
A-4000-147	activated carbon filters: nominal scfm 10; max scfm 12	1/2 in. NPT	$2,262.00
A-4110-604	coalescing filter elements: nominal scfm 10; maximum scfm 17		$336.00
A-4000-632	activated carbon filter elements: nominal scfm 10; max scfm 12		$1,243.00
A-4000-610	auto drain kit (all coalescing filters)		-

Electro-Pneumatic Transducer

The EP-8000 electro-pneumatic transducer converts a 0 to 10 VDC or 4 to 20 mA signal from an electric controller into proportional Pneumatic output pressure signal. Four models are available, which are grouped into two basic versions: low-volume output units (non-relay) and high-volume output units (relay).



Part	Output	Input	Input Range	Factory Output Range psig	LIST
EP-8000-2	high volume (relay)	voltage	0.25 to 9.5 VDC	0.5 to 19 (3.5 to 133)	$863.00
EP-8000-3	low volume (no relay)	current	4 to 20 mA DC	3 to 15 (21 to 105)	-

Accessories

Part	Description	LIST
R-3710 series	0.007 in. restrictor (required for low volume models)	-
A-4000-1037	in-line filter (required for all models; package of 5)	$148.30
JC-5361	hypodermic needle test probe assembly	-
G-2010 Series	0 to 30 psig (0 to 210 kPa) gauge	-

PNEUMATIC CONTROLS

JOHNSON CONTROLS

Pneumatic Fittings

We stock a large and wide variety of fittings for Pneumatic systems. Please check with your local branch.

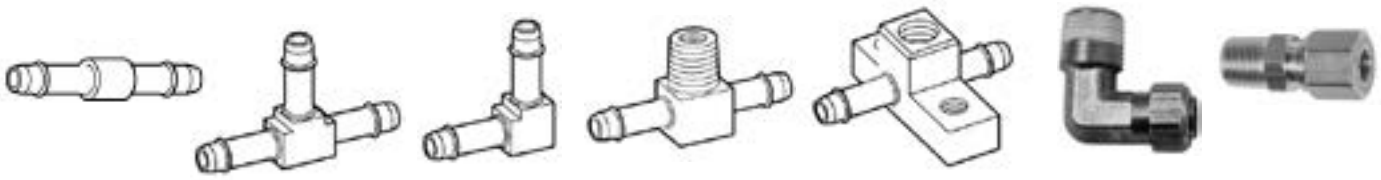

Pneumatic Tubing

Dekoron 1219-44003 is a black, 1/4” OD tubing for pneumatic HVAC systems. It is designed to control flame spread and smoke generation in case of fire. This tubing can be installed in accordance with NFPA, Standard 90A “Installation of Air Conditioning and Ventilation Systems 1985”.

Part	Description	LIST
1219-13004	Wirex 5/32" single poly tubing	$0.70
1219-130T4	Wirex 5/32" twin poly tubing	$1.40
1219-44003	Wirex 1/4" single poly tubing	$0.90
1219-66203	Wirex 3/8" single poly tubing	$1.60

Restrictors

The R-3710 series restrictors limit pressure and flow direction in pneumatic operating systems.



Part	Colour / Size	LIST
R-3710-3005	red 0.005 in. orifice 1/4 in. x 1/4 in. x 1/4 in.	$40.20
R-3710-3007	aqua 0.007 in. orifice 1/4 in. x 1/4 in. x 1/4 in.	$56.50
R-3710-2007	aqua 0.007 in. orifice 1/4 in. x 1/4 in.	$48.10
R-3710-1005	red 0.005 in. orifice	$58.40
R-3710-1007	aqua 0.007 in. orifice	$58.40

PNEUMATIC CONTROLS
JOHNSON CONTROLS

Air Pressure Gauge



The G-2010 air pressure gauge provides continuous indication of air pressure or on-off status in Pneumatic controls systems.

Specifications:

Accuracy: 3-2-3% of full range per ANSI Spec. B40, 1M
Ambient Temp. Limits: -20 to 150°F (-29 to 66°C)

Part	Gauge Size (in)	Range (psig/kPa)	Mounting	LIST
G-2010-5[(a)]	1-1/2	0 to 30/0 to 200	stem	$140.50
G-2010-11[(a)]	2	0 to 30/0 to 200	stem	$155.70
G-2010-23[(a)]	2	0 to 100/0 to 700	stem	$282.50

(a) All connections 1/8 in. NPT center back

Pneumatic Actuator



The V-3000 Pneumatic actuator can position steam or water valve-modulating plugs in response to a Pneumatic signal from a controller.
Used on 1/2 in. flare valves, VT series valves, and 3/4 to 1-1/2 cage trim valves. This actuator is not used with VG7000 series valves.

Specifications:
Maximim Control Pressure: 30 psig
Available Spring Ranges: 3-6, 4-8, and 9-13 psig[(a)]
Air Connection: 1/8 in. NPT barbed fitting for 5/32 in. O.D. polytubing

Part	Description	LIST
V-9502-600-JCS	Diaphragm Assembly	$411.00

Three-Way Solenoid Air Valve

The V11 three-way solenoid valve is used in applications where an electrical circuit operates a pneumatic control device.

- two-position action
- three piping connections marked: N.O. (normally open); N.C. (normally closed); COM (common)
- can be operated manually by removing the plug and inserting a key
- furnished with an attached bracket
- operates in any position
- positive air seal

All V11 series air valves are designed for use as operating devices. Where an operating control failure would result in personal injury and/or loss of property, it is the responsibility of the installer to add devices or systems to protect against, or warn of, control failure.

Specifications:

Air Connections: 1/4 in. barb connections in common port and normally closed port; normally open port is 1/8 in. NPT (internal)

Operating Pressure (all three ports): 0 to 25 psig (0 to 175 kPa)

Part	Description	LIST
V11HAA-100	110/120 V, 50/60 Hz	$1,031.00
V11HBA-100	220/240 V, 50/60 Hz	$1,028.00
V11HCA-100	208 V, 50/60 Hz	$1,018.00
V11HGA-100	24 V, 50/60 Hz	$1,108.00
V11HAA-115	110/120 V, 50/60 Hz includes internal grounding lug	$1,045.00

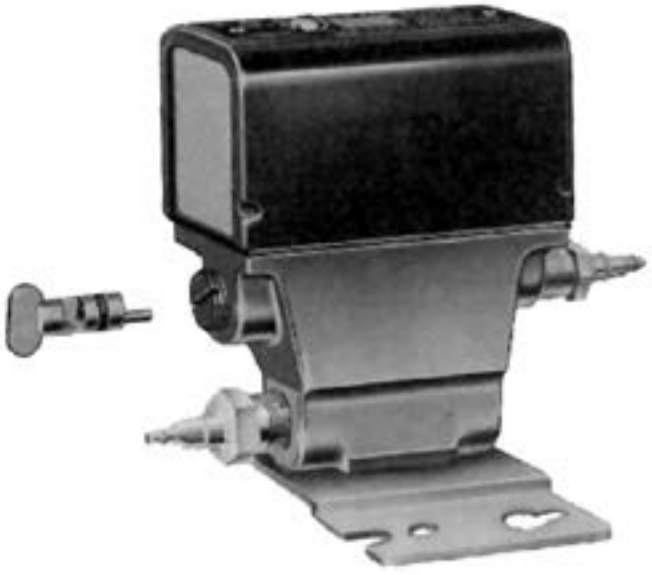

PNEUMATIC CONTROLS

JOHNSON CONTROLS

T-4000 Series Pneumatic Room Thermostats



The T-4000 sereis Pneumatic room thermostats provide individual space temperature control in all types of heating and cooling applications. By producing a proportional output signal, these thermostats modulate controlled devices in response to load changes in the space. This imposes the least demand on mechanical heating and cooling apparatus. A variety of high volume output controllers are available to meet the functional requirements of any control system. Auxiliary devices are available to perform functions such as two-position action, high-low pressure selection, sequencing, etc.

*BECAUSE OF THE LARGE NUMBER OF VARIATIONS AND OPTIONS IN THE T-4000 SERIES OF PNEUMATIC THERMOSTATS, WE REQUEST YOU CONTACT THE NEAREST BRANCH FOR HELP WITH YOUR SELECTION.

T-5800 Series Pneumatic Receiver-Controller



The T-5800 Pneumatic Receiver-Controller is designed for use with remote temperature, humidity, or pressure transmitters that are connected to a control variable (CV) input. The controller provides precise control of Pneumatic devices. The T-5800 is capable of providing restricted supply air to low volume remote transmitters, reducing the number of air line connections needed between instruments to only one line. The "CV" input accepts the transmitted output of any pneumatic device with a calibrated output of 3 to 15 psig (21 to 105 kPa)

Specifications:

Action:

T-5800-1: Direct or reverse acting, field selectable

T-5800-3: Direct or reverse acting with direct or reverse readjustment, field selectable

Gain: Adjustable from 0.5:1 to 15:1, factory set at approximately 10:1

Supply Pressure: 18 to 22 psig (126 to 154 kPa), nominal 20 psig (140 kPa)
Air supply must be clean, dry and oil-free

Part	Description	LIST
T-5800-1	single input, proportional	$4,385.00
T-5800-3	dual input, proportional	$6,059.00

ELECTRONIC TEMPERATURE CONTROL
KE2 THERMSOLUTIONS

KE2 Evaporator Efficiency (KE2 Evap)



- UL Recognized - Canada/U.S.
- Alarms can be automatically e-mailed/texted
- New install or retrofit

The KE2 Evaporator Efficiency is an electronically operated evaporator controller designed to save energy in refrigeration systems through precise control of superheat, fan cycling, reducing compressor run time and implementing demand defrosts.

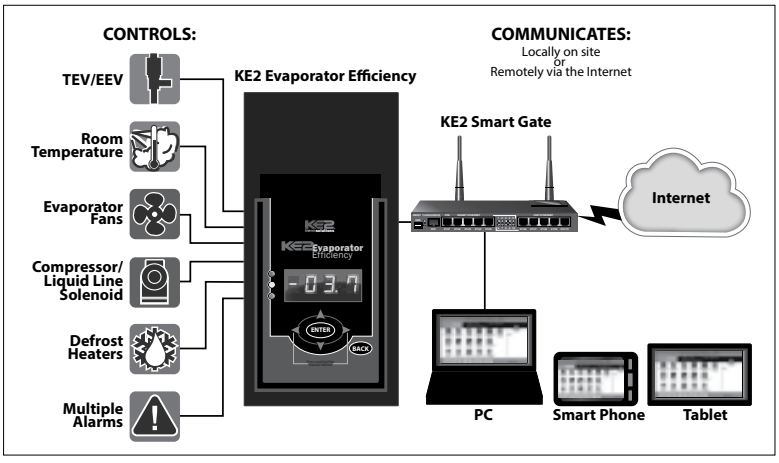

Each Evaporator Efficiency controller comes with one return air temperature sensor (blue) and two coil surface temperature sensors (yellow and green). Superheat temperature sensor and pressure sensors are optional add ons.

KE2 Evaporator Efficiency (KE2 Evap) Controllers, Kits, Communications and Accesories

Part#	Category	Description	
20178*	KE2 Evap	KE2 Evaporator Efficiency Controller Kit 120 / 208 / 230VAC	Includes (3) 15' color temperature sensors, terminal board & Life Time Data Key
20844*	KE2 Evap	KE2 Evaporator Efficiency Ultimate Install Kit 120 / 208 / 230VAC	Includes (3) 40' color & temperature sensors, mounting box, terminal board & Life Time Data Key
20222*	KE2 Evap	KE2 Evaporator Efficiency Controller Beacon® Replacement	Includes (3) 15' color & (1) 10' black temperature sensors, pressure transducer, and suction temperature sensor
21673	KE2 Evap	KE2 Evap-RE2 Contactor Panel	Fully wired & tested panel includes KE2 Evap-RE 2 controller, contactors and transformer. (1) Ethernet adaptor (already installed in the Contactor Panel); (4) 40' color temperature sensors; (1) door switch; (1) pressure transducer (0-150 psia) w. 40ft. lead ; (1) Current Transformer Board (already installed in the Contactor Panel) to monitor and alarm on fan and heater load.
20529	KE2 Evap	KE2 Evaporator Efficiency Replacement Fuses	KE2 Evaporator Efficiency Replacement Fuses
20695	KE2 Communications	KE2 Smart Gate – Wireless communications tool for KE2 Evap Installations	
20199	Accessories	Temperature Sensor – NTC Thermistor Assembly, 10 ft. – Black	
20200	Accessories	Temperature Sensor – NTC Thermistor Assembly, 40 ft. – Black	
20201	Accessories	Pressure Transducer – 0 to 150 psia, 10 ft. lead	
20204	Accessories	Pressure Transducer – 0 to 150 psia, 40 ft. lead	
20543	Accessories	Door Switch	
20687	Accessories	Mounting Box – for use with KE2 Evap, KE2 Evap-RE, & KE2 Controlled Environment	

KE2 Temp + Valve Control

Part #	Description	
21301	Air defrost controller that replaces both a thermostat and defrost time clock, while also driving a EEV, EEPRV or EHGPV. Or, configure to control only the electric valve.	Includes (1) 10' pressure transducer, (1) 45" temperature sensor, (1) 10' temperature sensor (Valves are sold separately. Valve should be selected for the appropriate capacity of the system, and fitting size. See page 3 for valve options.)
21393		**Controller Only**

JOHNSON/RANCO/
HONEYWELL 565-666

ELECTRONIC TEMPERATURE CONTROL

KE2 THERMSOLUTIONS

KE2 Edge Manager & KE2 Wireless Sensors

The KE2 Edge Manager is similar to the KE2 LDA communication device with several features that make it unique, including easily creating a common dashboard that integrates KE2 sensor data with in-depth system operational information from KE2Therm controllers.

The KE2 Edge Manager provides real-time data tracking, storing, and uploading. And, while many monitoring options force users to store their data on the provider's "cloud," with the KE2 Edge Manager, local access is FREE - the user owns their data.

Plus, accessing the data has never been easier. The KE2 Edge Manager lets users access data locally, on their network, using their own "cloud" portal, or via the secure KE2 Portal.

The KE2 Edge Manager, when used with KE2 Wireless Sensor technology provides the feasibility to remotely monitor and receive alarm notifications in almost any refrigeration application – from warehouses, to walk-ins, reach-ins, cold rails, under counter and more.

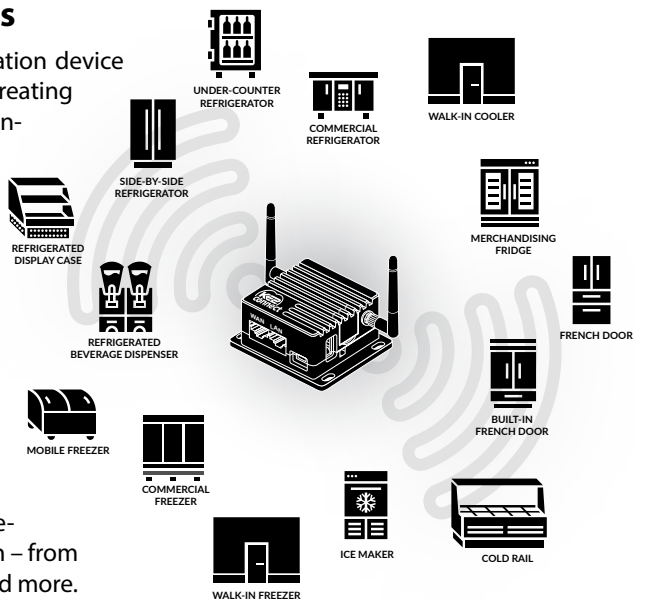

KE2 Edge Manager & KE2 Wireless Sensors		
Part #	**Description**	
21634	KE2 Edge Manager KE2-EM35)	
21660	KE2- EM35 & (5) Sensor Kit	Kit includes (3) 21632 & (2) 21633, a USB Bluetooth Adapter pn 21690
21632	KE2 Wireless Sensor	
21633	KE2 Wireless Sensor w/Remote Probe	

KE2 Temp + Defrost



- UL Recognized - Canada/United States
- Combines functions of a thermostat and defrost timeclock.

The KE2 Temp + Defrost controller is designed to simplify refrigeration controls by combining the functions of a thermostat and defrost timeclock.

The KE2 Temp's robust design provides versatility for a wide range of medium and low temperature applications. When applied to medium temperature applications of 37°F and higher, the built-in defrost clock may be used to perform time-initiated and time-terminated defrost cycles.

In low temperature applications, the KE2 Temp provides an easy-to-understand thermostat that eliminates end user frustration with the overly complicated options available today. The KE2 Temp has been thoughtfully setup to provide the best system operation and an intuitive user interface.

The controller's single-pole-double-throw relay controls the refrigeration and defrost cycles.

KE2 Temp + Defrost		
Part #	**Description**	
20611	KE2 Temperature + Defrost controller – for Air Defrost applications	Includes (1) **45"** black temperature sensor

ELECTRONIC TEMPERATURE CONTROL
KE2 THERMSOLUTIONS

KE2 Temp + Valve Air Defrost Controller & **KE2 RSV** Electronic Expansion Valve (EEV)



- The KE2 Temp + Valve controller runs off of 120V or 208V-240V, available right at the evaporator.
- No setpoints required for air defrost R-404A systems, simply power up and go. Less than a minute to setup for R-448A, R-449A, R-407C and R-407A.
- The KE2 Temp + Valve can serve as the thermostat for the space, providing state-of-the-art digital control & easy to read blue LED display.
- For air defrost units, no external timeclock is needed. Simply tell the controller how long and how many times a day to defrost – you're all set.

The KE2 Temp + Valve controller in combination with the KE2 RSV Electronic Expansion Valve (EEV) can handle a much wider range of operating conditions, providing optimal control, even during low head pressures.

The KE2 EEV Retrofit Kit includes all the KE2 Therm products in one box that you'll need to retrofit an evaporator with an EEV. So, now you can easily retrofit existing evaporators for use with new, efficient condensing units.

Use the KE2 EEV Retrofit Kit to realize all the benefits of EEV performance, without the hassle.

KE2 EEV Retrofit Kits

Part #	Description	
21844	KE2 Temp + Valve controller, 10' Blue Temperature sensor, 10' Black Temperature Sensor, 10' Pressure Transducer Cable, 0-150 psia Pressure Transducer, Pocket Screwdriver for Electronics	RSV-100 3/8" x 1/2" ODF w. 10 ft. lead
21744		RSV-130 3/8" x 1/2" ODF w. 10' lead
21745		RSV-220 3/8" x 1/2" ODF w. 10' lead
21746		RSV-320 3/8" x 1/2" ODF w. 10' lead
21821		RSV-400 5/8" x 7/8" ODF w. 15' lead
21845		RSV-550 5/8" x 7/8" ODF w. 15' lead
21846		RSV-650 5/8" x 7/8" ODF w. 15' lead

KE2 Products Guide








Controller Features	KE2 Temp + Defrost	KE2 Temp + Valve Control	KE2 Low Temp + Defrost	KE2 Adaptive Control	KE2 Evaporator Efficiency	KE2 Controlled Environment
Part Number	20611	21301	20903	21177	20178, 20844	20893, 20897
Defrost Type	Air (off time)	Air (off time)	Air, Electric	Air, Electric	Air, Electric, Hot Gas	Air, Electric, Hot Gas
Initiate Defrost	Time	Time	Time	Demand, Time	Demand, Time, or Run-Time	Demand, Time, or Run-Time
Terminate Defrost	Time	Time	Temperature/Time External Signal	Temperature/Time External Signal	Temperature/Time	Temperature/Time
Evaporator Fan Management Options	No	No	Yes	Yes	Yes	Yes
Defrost Heater Management Options	N/A	N/A	Yes	Yes	Yes	Yes
Alarm Options	Display or E-mail with KE2 EM35	Display or E-mail with KE2 EM35	Display, Buzzer or E-mail with KE2 EM35	Display, Buzzer or E-mail with KE2 EM35	Display, Alarm Relay, Buzzer/ Light kit, E-mail/text	Display, Alarm Relay, Buzzer/ Light kit, E-mail/text
Eliminates T-Stat, Time Clock	Yes	Yes	Yes	Yes	Yes	Yes
Eliminates Fan Delay, Defrost Termination Device	NA	NA	Yes	Yes	Yes	Yes
Valve Control	TEV	TEV, EEV, EEPRV, EHGBPV	TEV	TEV	TEV or EEV	EEV
Compressor Control						
Humidity Control/Monitor	No	No	No	No	No	Yes
Communication	Modbus	Modbus	Modbus	Modbus	TCP/IP, API	TCP/IP
Data Logging	366 days with KE2 EM35	366 days with KE2 EM35	366 days with KE2 EM35	366 days with KE2 EM35	30 days (native), or 366 days with KE2 EM35	30 days (native), or 366 days with KE2 EM35

ELECTRONIC TEMPERATURE CONTROLS
JOHNSON CONTROLS

MR Series Defrost Control Modules



The MR Series controls are versatile, microprocessor-based, multifunction, programmable temperature controls. Depending on the model chosen, the MR Series controls can also manage alarm, defrost cycle (active or passive defrost), and evaporator fan functions. The MR Series controls have large red LED displays. These compact controls are available in panel mount and DIN rail mount varieties. The MR Series controls use the A99B temperature sensors, which allow remote mounting of the display unit. All MR Series controls perform temperature and alarm management. Some models have additional capabilities.

MR2 Series Controls
The MR2 Series provides temperature, alarm and defrost cycle management. The MR2 control performs defrost cycle management using time-based, passive, off cycle defrost. It can replace a temperature control, a digital temperature readout, and a defrost timer.

MR4 Series
The MR4 Series provides temperature, alarm, defrost and evaporator fan management. The MR4 Series provides defrost cycle management with hot gas or electric heat defrost and defrost termination based on time or temperature. The MR4 Series consolidates the functions of a temperature control, a digital temperature readout, a defrost cycle timer, and a defrost termination device.

Features:

- Alarm management functions provide local alarm display and an alarm output relay that can be used to trigger a remote alarm or dial-out modem
- Programming button lockout allows user to disable programming buttons and deter accidental or unauthorized changes

Part	Description	LIST
MR2DR24-11C	refrigeration temperature / defrost control	-
MR2PM24-11C	refrigeration temperature / defrost control w/1	$1,437.00
MR4PM12C-12C	replacement control & sensor	$1,451.00
MR4PM24-12	refrigeration defrost temperature	$1,506.00
MR4PMUHV-12C	defrost control kit	$1,569.00

MS Series Temperature Stage Control Modules

The MS Series temperature controls are versatile, microprocessor-based, multifunction, programmable temperature controls. They are designed for single and multiple stage temperature control applications. Depending on the model selected, the MS Series controls can operate in the following modes:

- Direct mode
- Reverse mode
- Deadband mode
- Independent Setpoint mode

The MS Series controls have large, easy-to-read, red LED displays. These compact controls are available in panel mount and DIN rail mount models. MS Series controls use the A99B temperature sensors, which allow remote mounting of the display unit.

Part	Description	LIST
MS4DR24T-11C	4 stage temperature control	$1,412.00
MS4PM12CT-11C	replacement multi-stage control	-
MS4PM24T-11C	4 stage temperature control, panel mount	
MS4PMUHVT-11C	multi-stage control kit	$2,283.00

ELECTRONIC TEMPERATURE CONTROL

JOHNSON CONTROLS

A421 Electronic Temperature Controls

Description:

The A421 Series controls are single stage, electronic temperature controls with a single-pole, double-throw (SPDT) output relay. The controls feature an adjustable backlit LCD for viewing the temperature and status of other functions, and a three-button touchpad for setup and adjustment. An LED indicates the On/Off status of the output relay.

The A421 controls are available in low voltage 24 VAC and high voltage 120 or 240 VAC models, which provide options for most refrigeration and HVAC applications.

The A421 controls provide heating or cooling control, sensor offset, temperature setback, adjustable anti-short cycle delay, and a restricted user adjustment

mode. The temperature units can be displayed in °F or °C. The temperature adjustment range is -40 to 212°F or -40 to 100°C.

Features

- Control Front Panel LCD
- Basic and Advanced Programming Menu
- On/Off Temperature Adjustment
- Switch-Activated Temperature Setback
- Adjustable Anti-Short Cycle Delay
- Adjustable Sensor Offset
- Optional Restricted Adjustment Mode
- Sensor Failure Mode
- Backlight Brightness Level

Applications

The A421 Electronic Temperature Control can be used to control a wide variety of single-stage refrigeration or HVAC equipment. Sample temperature control applications include:

- temperature monitoring and alarming
- on/off control of boilers and chillers
- boiler and chiller pump control
- heating or cooling control
- cooling tower fan control based on water temperature
- supply, makeup, and mixed air temperature control
- temperature actuated valve control
- supply and makeup air damper and fan control
- condenser fan control based on condenser temperature



Part #	Replaces	Description	LIST
A421ABC-02C	A419ABC-1C	Type 1 (NEMA), IP20 enclosure for DIN and surface mount applications. 120/240 VAC. Includes A99 sensor with 6.6 ft (2M) cable	$334.00
A421ABC-03C	A419ABC-2C	Type 1 (NEMA), IP20 enclosure for DIN and surface mount applications. 120/240 VAC. Includes A99 sensor with 9.75 ft (3M) cable	$348.00
A421ABC-04C	A419ABC-3C	Type 1 (NEMA), IP20 enclosure for DIN and surface mount applications. 120/240 VAC. Includes A99 sensor with 13.1 ft (4M) cable	-
A421ABC-06C	A419ABC-4C	Type 1 (NEMA), IP20 enclosure for DIN and surface mount applications. 120/240 VAC. Includes A99 sensor with 19.5 ft (6M) cable	-
A421ABD-02C	New Model	Type 1 (NEMA), IP20 standard enclosure for DIN rail and surface-mount applications. Rated for 120/240 VAC. Includes integral timer for off-cycle defrost control. Includes an A99BB-200C temperature sensor with 6 ft 7-1/5 in. (2.0 m) cable	$385.00
A421AEC-01C	A419AEC-1C	Type 4x (NEMA), IP66 enclosure for DIN and surface mount applications. 120/240 VAC. Includes A99 sensor with 9-3/4 in (0.25M) cable	$491.00
A421AEC-02C	A419AEC-2C	Type 4x (NEMA), IP66 enclosure for DIN and surface mount applications. 120/240 VAC. Includes A99 sensor with 6.6 ft (2M) cable	-
A421GBF-02C	A419GBF-1C	Type 1 (NEMA), IP20 enclosure for DIN and surface mount applications. 24 VAC. Includes A99 sensor with 6.6 ft (2M) cable	$334.00
A421GEF-01C	A419GEF-1C	Type 4x (NEMA), IP66 enclosure for DIN and surface mount applications. 24 VAC. Includes A99 sensor with 9-3/4 in (0.25M) cable	$489.00
A421GEF-02C	A419GEF-2C	Type 4x (NEMA), IP66 enclosure for DIN and surface mount applications. 24 VAC. Includes A99 sensor with 6.6 ft (2M) cable	$512.00
A421ABG-02C	A419ABG-3C	Type 1 (NEMA), IP20 enclosure for DIN and surface mount applications with 6 ft (1.8m) cord with 120 VAC grounded male plug and 6 ft. (1.8 m) cord with 120 VAC grounded female plug. Includes A99 sensor with 6.6 ft (2M) cable.	$459.00
A421ABJ-02C	New Model	Type 1 (NEMA), IP20 enclosure for DIN and surface mount applications with 6 ft (1.8m) cord with 120 VAC combination male/female grounded piggyback plug. Includes A99 sensor with 9.75 ft (3M) cable	-
A421AEJ-01C	New Model	Type 4x (NEMA), IP66 enclosure for DIN and surface mount applications with 6 ft (1.8m) cord with 120 VAC combination male/female grounded piggyback plug. Includes A99 sensor with 9-3/4 in (0.25M) cable	-
A421AEJ-02C	New Model	Type 4x (NEMA), IP66 enclosure for DIN and surface mount applications with 6 ft (1.8m) cord with 120 VAC combination male/female grounded piggyback plug. Includes A99 sensor with 6.6 ft (2M) cable	-

TEMPERATURE CONTROL APPLICATIONS

JOHNSON CONTROLS

A11 Series Low Temperature Cutout

Description:

The A11 Series are low temperature cutout controls, which incorporate a 20 foot long, vapor charged, sensing element. The A11 reacts to the coldest 18 inch section of the controls sensing element. The A11 is suitable for monitoring the face temperature of hot water coils.



Features:

- snap-acting contacts
- external temperature scale
- easy setpoint adjustment (i.e., top or bottom access)

Accessories:

- replacement cover: CVR30A-601R

Applications:

- low temperature cut-out for coils and/or liquid sensing pipes

Part Number	Switch Action	Range °F (°C)	Diff F° (C°)	Bulb and Capillary	Range Adjuster	Electrical Ratings				LIST
						Motor Ratings VAC	120	208	240	
A11A-1C	SPST Open Low	35 to 45 (2 to 7)	Manual Reset	20 ft of 1/8 in. O.D. Tubing 4 ft Cap.	Screwdriver Slot	AC Full Load Amp	16.0	9.2	8.0	$924.00
						AC Locked Rotor Amp	96.0	55.2	48.0	
A11B-1C	SPST Open Low	35 to 45 (2 to 7)	8 (Fixed) (4.4)	20 ft of 1/8 in. O.D. Tubing 4 ft Cap.	Screwdriver Slot	Non-Inductive or Resistance Load Amp (Not Lamp Loads)	16.0	9.2	8.0	$890.00
						Pilot Duty - 125 VA, 24 to 277 VAC				

A19 High Range Temperature

Description:

The A19 Series are single stage temperature controls that incorporate liquid filled sensing elements.



Features:

- wide temperature ranges available
- constant differential throughout the entire range
- SPST or SPDT snap acting switches
- fixed or adjustable differential available
- unaffected by barometric pressure change
- unaffected by cross ambient conditions

Applications:

A19's are suitable for temperature control in heating, ventilating, and refrigeration applications.

Part Number	Switch Action	Range °F (°C)	Diff F° (C°) (Factory Set)	Bulb and Capillary	Bulb Well No. (not supplied)	Range Adjuster	Max Bulb Temp °F (°C)	Electrical Ratings				LIST
								Motor Ratings VAC	120	208	240	
†A19AAB-10C	SPST, Open High Oven Thermostat	200 to 550 (93 to 288)	10 (5.6)	3/16 in. x 6 in. copper 8 ft. Cap.	-	Convertible	620 (327)	Non-Inductive or Resistance Load Amp* (Not Lamp Loads)	22 amps 120 to 277 VAC			$871.00
A19AAC-9C	SPDT	100 to 240 (38 to 116)	5 (2.8)	3/8 in. x 3-7/8 in. copper 6 ft. Cap.	WEL14A-602R	Screwdriver Slot External Scale	290 (143)	Pilot Duty - 125 VA, 24 to 600 VAC *SPST and only one side of SPDT control				$464.00

† Universal replacement with removable knob and tension clip for conversion to knob, screwdriver, or concealed adjustment.

* Non-Stock item. Built to order.

TEMPERATURE CONTROL APPLICATIONS

JOHNSON CONTROLS

A19 Series Remote Bulb

Description:
The A19 Series are single stage temperature controls that incorporate liquid filled sensing elements.

Accessories:
Packing nut available for closed tank application. Specify part number FTG13A-600R. Bulb wells (WEL14A Series) available for liquid immersion applications.

Features:
- wide temperature ranges available
- constant differential throughout the entire range
- compact enclosure
- fixed or adjustable differential available
- variety of sensing element styles
- unaffected by cross ambient conditions

Applications:

A19's are suitable for temperature control in heating, ventilating, and refrigeration applications.

Part Number	Switch Action	Range °F (°C)	Diff F° (C°)	Bulb and Capillary	Bulb Well No. (not supplied)	Range Adjuster	Electrical Ratings				LIST
							Motor Ratings VAC	120	208	240	
WIDE RANGE - ADJUSTABLE DIFFERENTIAL											
A19ABA-40	SPST	-30 to +100 (-34 to 38)	3 to 12 (1.7 to 6.7)	3/8 in. x 4 in.	WEL14A-602R	Screwdriver Slot	AC Full Load Amp	16.0	9.2	8.0	$261.50
A19ABC-4	SPDT	50 to 130 (10 to 55)	3-1/2 to 14 (1.9 to 8)	3/8 in. x 5 in. 8 ft. Cap	WEL14A-603R	Knob	AC Locked Rotor Amp	96.0	55.2	48.0	$460.00
†A19ABC-24	SPDT	-30 to +100 (-34 to 38)	3 to 12 (1.7 to 6.7)	3/8 in. x 4 in. 8 ft. Cap	WEL14A-602R	Convertible	Non-Inductive or Resistance Load Amp* (Not Lamp Loads	22 amps 120 to 277 VAC			$260.20
†A19ABC-36	SPDT	-30 to +100 (-34 to 38)	3 to 12 (1.7 to 6.7)	3/8 in. x 4 in. 20 ft. Cap	WEL14A-602R	Convertible					$519.00
A19ABC-37	SPDT	-30 to +100 (-34 to 38)	3 to 12 (1.7 to 6.7)	3/8 in. x 4 in. 10 ft. Cap	WEL14A-602R	Screwdriver Slot	Pilot Duty - 125 VA, 24 to 600 VAC *SPST and only one side of SPDT control				$310.00
FIXED DIFFERENTIAL											
A19AAF-12	SPDT	25 to 225 (-4 to 107)	3-1/2 (1.9)	3/8 in. x 3 in. 10 ft. Cap	WEL14A-602R	Screwdriver Slot	AC Full Load Amp	6.0	3.4	3.0	$515.00
							AC Locked Rotor Amp	36.0	20.4	18.0	
							Non-Inductive or Resistance Load Amp* (Not Lamp Loads)	10 amps 120 to 277 VAC			
							Pilot Duty - 125 VA, 24 to 277 VAC				
CASE COMPENSATED - FIXED DIFFERENTIAL											
A19AAC-4	SPDT	0 to 80 (-18 to 27)	5 (2.8)	3/8 in. x 4 in. 6 ft. Cap	WEL14A-602R	Screwdriver Slot	AC Full Load Amp	16.0	9.2	8.0	$514.00
							AC Locked Rotor Amp	96.0	55.2	48.0	
							Non-Inductive or Resistance Load Amp* (Not Lamp Loads)	22 amps 120 to 277 VAC			
							Pilot Duty - 125 VA, 24 to 600 VAC *SPST and only one side of SPDT control				
A19AAD-12	SPST Open Low	-30 to +50 (-34 to 10)	2-1/2 (1.4)	3/8 in. x 4 in. 7 ft. Cap	WEL14A-602R	Screwdriver Slot	AC Full Load Amp	6.0	3.4	3.0	-
							AC Locked Rotor Amp	36.0	20.4	18.0	
							Non-Inductive or Resistance Load Amp (Not Lamp Loads)	10 amps 120 to 277 VAC			
							Pilot Duty - 125 VA, 24 to 277 VAC				
CLOSE DIFFERENTIAL											
A19AAD-5	SPST Open Low	30 to 50 (Milk Cooler) (-1 to 10)	2 (1.1)	3/8 in. x 2-5/8 in. 6 ft. Cap	WEL16A-601R	Screwdriver Slot	AC Full Load Amp	6.0	3.4	3.0	$481.00
A19AAF-20	SPDT	-30 to +100 (-34 to 38)	2-1/2 (1.4)	3/8 in. x 4 in. 6 ft. Cap	WEL14A-602R	Screwdriver Slot	AC Locked Rotor Amp	36.0	20.4	18.0	$292.80
A19AAF-21	SPDT	40 to 90 (4 to 32)	1-1/2 (0.8)	3/8 in. x 5-3/4 in. 6 ft. Cap	WEL14A-603R	Screwdriver Slot	Non-Inductive or Resistance Load Amp (Not Lamp Loads)	10 amps 120 to 277 VAC			$418.00
							Pilot Duty - 125 VA, 24 to 277 VAC				
MANUAL RESET											
A19ACA-14	SPST Open Low	-30 to +100 (-34 to 38)	Manual Reset	3/8 in. x 4 in. 6 ft. Cap	WEL14A-602R	Screwdriver Slot	AC Full Load Amp	16.0	9.2	8.0	$422.00
							AC Locked Rotor Amp	96.0	55.2	48.0	
A19ACA-15	SPST Open Low	-30 to +100 (-34 to 38)	Manual Reset	3/8 in. x 4 in. 10 ft. Cap	WEL14A-602R	Screwdriver Slot	Non-Inductive or Resistance Load Amp (Not Lamp Loads)	16.0	9.2	8.0	$453.00
							Pilot Duty - 125 VA, 24 to 600 VAC				
A19ADB-1	SPST Open High	100 to 240 (38 to 116)	Manual Reset	3/8 in. x 3-1/2 in. 6 ft. Cap	WEL14A-602R	Knob	AC Full Load Amp	10.0	-	6.0	$462.00
A19ADN-1	SPST Open High	100 to 240 (38 to 116)	Manual Reset	3/8 in. x 4 in. 6 ft. Cap	WEL14A-602R	Screwdriver Slot	AC Locked Rotor Amp	60.0	-	36.0	-
							Pilot Duty - 125 VA, 24 to 600 VAC				

† Universal replacement with removable knob and tension clip for conversion to knob, screwdriver, or concealed adjustment.

* Non-Stock item. Built to order.

TEMPERATURE CONTROL APPLICATIONS

JOHNSON CONTROLS

A19 Special Purpose Thermostat (Rubber Coated Bulb and Capillary)



Description: Bulb is designed for direct immersion.

Features: Rubber coated bulb and capillary provides corrosion resistance.

Specifications: maximum bulb temperature: 140°F (60°C)

Part Number	Switch Action	Range °F (°C)	Diff F° (C°)	Bulb and Capillary	Range Adjuster	Electrical Ratings				LIST
						Motor Ratings VAC	120	208	240	
A19AAF-4	SPDT	40 to 90 (4 to 32)	1-1/2 (0.8)	3/8 in. x 5-3/4 in. Rubber Coated 6 ft. Cap.	Screwdriver Slot	AC Full Load Amp	6.0	3.4	3.0	$558.00
						AC Locked Rotor Amp	36.0	20.4	18.0	
						Non-Inductive or Resistance Load Amp (Not Lamp Loads)	10 amps 120 to 277 VAC			
						Pilot Duty - 125 VA, 24 to 277 VAC				

A19 Hot Water Temperature Control (SPDT, Well Immersion)



Description: Universal replacement control for open high, open low, or SPDT applications. Not available less well assembly.

Features:

- liquid filled element provides rapid response to temperature change
- control furnished with well assembly for 1/2 in. tappings
- adjustable differential
- truly universal replacement
- all controls supplied with well assembly

Specifications: maximum bulb temperature: 290°F (143°C)

Part Number	Application	Switch Action	Range °F (°C)	Diff F° (C°)	Well Conn. Size-NPT	Range Adjuster	Electrical Ratings			LIST
							Motor Ratings VAC	120	240	
†A19ABC-11	Open High Open Low, (Operating and Circulator)	SPDT	100 to 240 (38 to 116)	6 to 24 (3 to 13)	1/2 in.	Convertible	AC Full Load Amp	10.0	6.0	$415.00
							AC Locked Rotor Amp	60.0	36.0	
							Pilot Duty - 125 VA, 24 to 600 VAC			
†A19ABC-12	Remote Mtg. (Operating and Circulator)	SPDT	100 to 240 (38 to 116)	6 to 24 (3 to 13)	1/2 in. 8 ft. Cap.	Convertible	AC Full Load Amp	10.0	6.0	$464.00
							AC Locked Rotor Amp	60.0	36.0	
							Pilot Duty - 125 VA, 24 to 600 VAC			

† Universal replacement with removable knob and tension clip for conversion to knob, screwdriver, or concealed adjustment.

* Non-Stock item. Built to order.

A19 Temperature Control Rainproof Enclosure (Industrial Thermostat)



Description: Remote bulb temperature control with rainproof (NEMA 3R) enclosure.

Features: rainproof gasketed enclosure

Specifications: maximum bulb temperature: 190°F (99°C)

Part Number	Switch Action	Range °F (°C)	Diff F° (C°)	Bulb and Capillary	Bulb Well No. (not supplied)	Range Adjuster	Electrical Ratings				LIST
							Motor Ratings VAC	120	208	240	
A19ANC-1	SPDT	0 to 150 (-15 to 65)	6 (Fixed) (3)	.290 x 2-1/2 in. 10 ft. Cap	WEL11A-601R	Screwdriver Slot	AC Full Load Amp	16.0	9.2	8.0	$898.00
							AC Locked Rotor Amp	96.0	55.2	48.0	
							Non-Inductive or Resistance Load Amp* (Not Lamp Loads)	22 amps 120 to 277 VAC			
							Pilot Duty - 125 VA, 24 to 600 VAC *SPST and only one side of SPDT control				

† Universal replacement with removable knob and tension clip for conversion to knob, screwdriver, or concealed adjustment.

* Non-Stock item. Built to order.

TEMPERATURE CONTROL APPLICATIONS

JOHNSON CONTROLS

A19 Coiled Bulb Space Thermostats



Description:

Wide range temperature control with air coil sensing element.

Features:

- wide temperature range
- NEMA 1 enclosure

Applications:

- return air or space temperature sensing

Specifications:

- maximum bulb temperature: 140°F (60°C)

Part Number	Switch Action	Range °F (°C)	Diff F° (C°)	Bulb and Capillary	Range Adjuster	Electrical Ratings				LIST
						Motor Ratings VAC	120	208	240	
VENTILATING, HEATING										
A19BAB-3	SPST, Open High "No Heat" position	35 to 95 (0 to 35)	3-1/2 (1.9)Fixed	1-3/8 in. x 2-1/4 in. Coiled	Knob	AC Full Load Amp	16.0	9.2	8.0	$430.00
						AC Locked Rotor Amp	96.0	55.2	48.0	
†A19BAC-1	SPDT	30 to 110 (-1 to 43)	3-1/2 (1.9)Fixed	1-3/8 in. x 2-1/4 in. Coiled	Convertible	Non-Inductive or Resistance Load Amp* (Not Lamp Loads)	22 amps 120 to 277 VAC			$464.00
						Pilot Duty - 125 VA, 24 to 600 VAC *SPST and only one side of SPDT control				
A19BAF-1	SPDT	30 to 110 (-1 to 43)	2 (1.1)Fixed	1-3/8 in. x 2-1/4 in. Coiled	Knob	AC Full Load Amp	6.0	3.4	3.0	$515.00
						AC Locked Rotor Amp	36.0	20.4	18.0	
						Non-Inductive or Resistance Load Amp* (Not Lamp Loads)	10 amps 120 to 277 VAC			
						Pilot Duty - 125 VA, 24 to 277 VAC				
COOLING										
†A19BBC-2	SPDT	-30 to +110 (-34 to 38)	3 to 12 (1.7 to 7)	1-3/8 in. x 2-1/4 in. Coiled	Convertible	AC Full Load Amp	16.0	9.2	8.0	$355.00
						AC Locked Rotor Amp	96.0	55.2	48.0	
						Non-Inductive or Resistance Load Amp* (Not Lamp Loads)	22 amps 120 to 277 VAC			
						Pilot Duty - 125 VA, 24 to 600 VAC *SPST and only one side of SPDT control				

A19 Flange Mounted Duct Thermostats



Description:

Wide range temperature control with special air coil sensing element and adjustable mounting flange.

Features:

- SPDT snap-acting contacts
- unaffected by barometric pressure or cross ambient temperatures
- Flat flange mounting with special coil element permits positioning the sensing bulb in the appropriate portion of the air stream

Applications:

These duct thermostats are used on roof top units, make-up heaters, duct heaters, and air handling systems of all types.

Part Number	No. of Stages	Switch Action	Range °F (°C)	Diff F° (C°)	Electrical Rating 120 VAC	Max. Allowable Temperature at Bulb °F (°C)	Electrical Ratings				LIST
							Motor Ratings VAC	120	208	240	
A19EAF-2	1	SPDT	30 to 110 (-1 to 43)	2(1.1)	6 amp	140 (60)	Non-Inductive	10 amps 120 to 277 VAC			$515.00
							Pilot Duty - 125 VA, 24 to 277 VAC				

† Universal replacement with removable knob and tension clip for conversion to knob, screwdriver, or concealed adjustment.

* Non-Stock item. Built to order.

JOHNSON CONTROLS

A19 Hot Water Temperature Control With Strap-on Mount

Description:

SPDT, strap-on, surface type hot water control for direct or reverse action. May be used as either an open high control or as an open low control.

Features:
- terminals are colour coded to simplify installation
- may be mounted on either horizontal or vertical rise pipe
- insulated back portion of case minimizes the effects of ambient temperature
- SPDT switch action for high or low temperature detection

Accessories:
- supplied with convertible range adjuster

Applications:
- automatic changeover control for fan coil systems

Specifications:
- maximum case ambient temperature: 140°F (60°C)
- maximum sensing element temperature: 290°F (143°C)

Part Number	Switch Action	Range °F (°C)	Diff F° Fixed (C°)	Mounting	Electrical Ratings			LIST
					Motor Ratings VAC	120	240	
†A19DAC-1	SPDT	100 to 240 (38 to 116)	10 (5.6)	Clamp-on Strap Supplied	AC Full Load Amp	10.0	6.0	$344.00
					AC Locked Rotor Amp	60.0	36.0	
					Pilot Duty - 125 VA, 24 to 600 VAC			



A19 Agricultural / Industrial Thermostat With NEMA 4X Enclosure

Description:

The A19PRC is a single stage electromechanical thermostat designed for heating and ventilation applications. It is designed with raintight enclosures for use in agricultural and industrial applications that require compliance with Article 547 of the National Electrical Code. The A19PRC has a rugged Noryl plastic that meets NEMA 4X specifications.

Features:

• A19PRC thermostats have an O-ring sealed setpoint adjustment knob and range scale with oversized white markings for easy readability in low light situations.
• Exposed portion of the liquid filled sensing elements are plated and plastic coated to resist damage in corrosive atmospheres.

Applications:

• controlling ventilation or heating equipment in animal confinement or industrial buildings

Part Number	Switch Action	Range °F (°C)	Diff F° (C°)	Bulb and Capillary	Range Adjuster	Electrical Ratings				LIST
						Motor Ratings VAC	120	208	240	
A19PRC-1	SPDT	30 to 110 (1 to 43)	3 to 12	1-3/8 in. x 2-1/4 in. Coiled	Knob	AC Full Load Amp	16.0	9.2	8.0	$924.00
						AC Locked Rotor Amp	96.0	55.2	48.0	
						Non-Inductive or Resistance Load Amp (Not Lamp Loads)	16.0	9.2	8.0	

† Universal replacement with removable knob and tension clip for conversion to knob, screwdriver, or concealed adjustment.

* Non-Stock item. Built to order.



TEMPERATURE CONTROL APPLICATIONS
JOHNSON CONTROLS

A28 Series Two Stage Temperature Controls



Description:

The A28 Series are two stage temperature controls that incorporate a liquid filled sensing element.

Features:

- wide temperature ranges available
- constant differential throughout the entire range
- SPST or SPDT snap acting switches
- unaffected by changes in barometric pressure
- unaffected by cross ambient conditions

Part Number	Switch Action	Range °F (°C)	Diff F° (C°)	Bulb and Capillary	Bulb Well No. (not supplied)	Range Adjuster	Electrical Ratings				LIST
							Motor Ratings VAC	120	208	240	
COILED BULB - FIXED DIFFERENTIAL											
†A28AA-8001	2-SPDT	30 to 110 (-1 to 43)	3-1/2 (1.9) ea. Stage 2 to 7 Adj. Fixed Between Stages	1-3/8 in. x 2-1/4 in. Coiled	-	Convertible	AC Full Load Amp*	16.0	9.2	8.0	$921.00
CASE COMPENSATED - FIXED DIFFERENTIAL											
*A28AA-8	2-SPDT	-30 to +50 (-34 to 10)	5 (2.8) ea. Stage 3 (1.7) Fixed Between Stages	3/8 in. x 4-1/16 in.* 6 ft. Cap	WEL14A-602R	Knob	Non-Inductive or Resistance Load Amp* (Not Lamp Loads)	16.0	9.2	8.0	$921.00
WIDE RANGE - ADJUSTABLE INTERSTAGE DIFFERENTIAL											
†A28AA-29	2-SPDT	-30 to +110 (-34 to 38)	5 (2.8) ea. Stage 2 to 7 Adj. Between Stages	3/8 in. x 4-1/16 in.* 8 ft. Cap	WEL14A-602R	Convertible	AC Locked Rotor Amp	96.0	55.2	48.0	$835.00
A28AA-36	2-SPDT	40 to 90 (4 to 32)	3 ea. Stage 2 to 7 Adj. Between Stages	3/8 in. x 6 in. 6 ft. Cap	-	Knob	Non-Inductive or Resistance Load Amp* (Not Lamp Loads)	16.0	9.2	8.0	-
A28AA-37	2-SPDT	60 to 140 (16 to 60)	5 ea. Stage 2 to 7 Adj. Between Stages	3/8 in. x 4 in. 6 ft. Cap	WEL14A-602R	Knob	Pilot Duty - 125 VA, 24 to 277 VAC *When used as a two circuit control, the total connected load must not exceed 2000VA				$813.00
A28AJ-4	2-SPDT	20 to 80 (7 to 27)	2 ea. Stage 2 to 7 Adj. Between Stages	3/16 in. x 22 in. 6 ft. Cap	-	Knob	AC Full Load Amp	6.0	3.4	3.0	-
							AC Locked Rotor Amp	36.0	20.4	18.0	
							Non-Inductive or Resistance Load Amp (Not Lamp Loads)	10.0	9.2	8.0	
							Pilot Duty - 125 VA, 24 to 277 VAC *When used as a two circuit control, the total connected load must not exceed 2000VA				

† Universal replacement with removable knob and tension clip for conversion to knob, screwdriver, or concealed adjustment.

* Non-Stock item. Built to order.

TEMPERATURE CONTROL APPLICATIONS

JOHNSON CONTROLS

A28 Two Stage Flange Mounted Duct Thermostats

Description:

Two stage temperature control with special air coil sensing element and adjustable mounting flange.



Features:

- Flat flange mounting with special coil element permits positioning of sensing bulb in the appropriate portion of the air stream
- 2-SPDT snap acting switches
- unaffected by barometric pressure or cross ambient temperatures

Applications:

These duct thermostats are used on roof top units, make-up heaters, duct heaters, and air handling systems of all types

Part Number	No. of Stages	Switch Action	Range °F (°C)	Differential F° (C°) Fixed		Max. Allowable Temperature at Bulb °F (°C)	Electrical Ratings					LIST
				Each Stage	Between Stage		Motor Ratings VAC	120	208	240	277	
A28AK-1	2	2-SPDT Switches	30 to 110 (-1 to 43)	2 (1.1)	3 (1.7)	140 (60)	AC Full Load Amp	6.0	3.4	3.0	-	$982.00
							AC Locked Rotor Amp	36.0	20.4	18.0	-	

A28 Two Stage Agricultural Thermostat with NEMA 4X Enclosure

Description:

The A28PJ series are two stage electromechanical thermostats with raintight enclosures.



Features:

- rugged Noryl plastic gasketed enclosures that meet NEMA 4X specifications
- O-ring sealed setpoint adjustment knobs
- Exposed portion of liquid filled sensing elements are plated and plastic coated to resist damage in corrosive atmospheres

Part Number	Switch Action	Range °F (°C)	Diff F° (C°)	Bulb and Capillary	Range Adjuster	Electrical Ratings					LIST
						Motor Ratings VAC	120	208	240	277	
A28PJ-1	2-SPDT	30 to 110 (-1 to 43)	3-1/2 (1.9) ea. Stage 3 (1.7) Fixed Between Stages	1-3/8 in. x 2-1/4 in. Coiled	Knob	AC Full Load Amp	6.0	3.4	3.0	-	$1,272.00
						AC Locked Rotor Amp	36.0	20.4	18.0	-	
						Non-Inductive or Resistance Load Amp (Not Lamp Loads)	10.0	9.2	8.0	7.2	
						Pilot Duty - 125 VA, 24 to 277 VAC Note: When used as a two circuit control the total connected load must not exceed 2000 VA					

† Universal replacement with removable knob and tension clip for conversion to knob, screwdriver, or concealed adjustment.

* Non-Stock item. Built to order.

JOHNSON CONTROLS

A72 Series Two Pole Heavy Duty Temperature Controls (Adjustable Differential)

Description:

The A72 Series temperature controls incorporate a vapor charged sensing element and heavy duty contacts.

Features:

• double pole single throw contact block contains two isolated sets of contacts that make or break simultaneously

Part Number	Switch Action	Range °F (°C)	Diff F° (C°)	Bulb and Capillary	Max Bulb Temp °F (°C)	Range Adjuster	Electrical Ratings							LIST
							Motor Ratings VAC	120 ø	208 ø	240 ø	220 ø	208 ø	320 ø	
A72AA-2	DPST Close High Open Low	15 to 55 (-9 to 13)	3 to 30 (.7 to 17)	3/8 in. x 3 in.* 6 ft. Cap.	200 (93)	Screwdriver Slot	AC Full Load Amp	24.0	24.0	24.0	15.0	15.9	15.0	$794.00

† Universal replacement with removable knob and tension clip for conversion to knob, screwdriver, or concealed adjustment.

* Non-Stock item. Built to order.



FLOW SWITCHES
JOHNSON CONTROLS

F61 Series Flow Switch (Standard Flow Rate - SPDT)

Description:

The F61 flow switch is designed for use on liquid lines using water, ethylene glycol solutions, or other liquids not injurious to the brass and phosphor bronze parts that come in contact with the liquid. The SPDT contacts make or break an electrical circuit when flow starts or stops.



Features:

- The bronze paddle is of three segments for use in pipes from 1 in. to 3 in. diameter
- Paddle segments may be removed or trimmed as needed

Applications:

- Use on lines carrying well water, swimming pool water, sea water, brine, or ethylene glycol
- Not for use with hazardous fluids or in hazardous atmospheres

Specifications:

F61KB-11: This flow switch is supplied with a NEMA 1 type enclosure
F61MB-1: These flow switches are supplied with a NEMA 4X enclosure and are intended for inside or outside use primarily to provide a degree of protection against corrosion, windblown dust and rain, splashing water, and hose directed water

Part Number	LIST
F261MAH-V01C-JCS	$791.00

F61 Series Flow Switch (Low Flow Rate - SPDT)

Description:

For use on liquid lines using water, ethylene glycol solutions, or other liquids not injurious to the brass and phosphor bronze parts. SPDT contact switch is activated by a low flow rate; however, it has a large flow capacity with minimum pressure drop.



Applications:

Typical applications include:

- water purification and treatment systems
- booster pumps
- fast shut down on high input boilers to guard against circulated failure
- cooling systems for electronic tubes, bearings, and compressors

Part Number	Inlet and Outlet Size Female NPT	Enclosure NEMA Type	Adjustment Range - GPM (m³/hr)		Maximum Liquid Temp °F (°C)	Maximum Liquid Pressure PSIG (kPa)	LIST
			R to Y Closes Flow Increase	R to Y Opens Flow Decrease			
F261KAH-V01C-JCS	3/4 in. x 3/4 in.	1	Minimum .6 (0.14) Maximum 1.1 (0.25)	Minimum .3 (0.07) Maximum 0.9 (0.2)	250 (121)	150 (1034)	$599.00

* Non-Stock item. Built to order.

JOHNSON CONTROLS

P10 Series Low Pressure Control (Single or 2-Stage)

Description:

These SPDT pressure controls open or close an electrical circuit from a change in operating pressure. R to Y terminals make (cut-in) on pressure rise.

Applications:

- Pneumatic systems
- control of pumps or small air compressors
- pressure-electric interlock of fluid flow systems

Part Number	No. of Stages	Contact Action	Range PSIG (kPa)	Factory Setting		Pressure Connector NPT	Electrical Ratings					LIST
				PSIG (kPa)	Switch Diff PSI (kPa)		Motor Ratings VAC	120	208	240	277	
P10BC-7	1	SPDT	3 to 20 (21 to 138)	12 (R to Y Cut-in)	2	Barbed	AC Full Load Amp	16.0	9.2	8.0	7.0	$401.00
							AC Locked Rotor Amp	96.0	55.2	48.0	42.0	
							Non-Inductive Amp	16.0	9.2	8.0	7.2	
							Pilot Duty - 125 VA at 24 to 277 VAC On 2 and 3 stage models, the maximum connected load shall not exceed 2000 VA					



JOHNSON CONTROLS

P20 Series Air Conditioning / Refrigeration Pressure Control

Description:

Field replacement high and low pressure controls for non-corrosive refrigerants. Dust-tight contact unit with arkles connectors, 36 in. capillary with 1/4 in. sweat section. Setpoint is screwdriver adjustable.



Applications:

- air conditioning high/low pressure control
- refrigeration high/low pressure control
- head pressure control

Part Number	Switch Action	Range PSIG (kPa)	Differential PSI (kPa)	Setting - PSIF (kPa)		Max Bellows Pressure PSIG (kPa)	LIST
				Opens	Closes		
P20BB-1	Open On Fall	7 to 150 (48 to 1034)	Manual Reset	40 (276)	Locked Man. Reset	250 (1724)	$240.80
P20DB-1	Open On Rise	100 to 425 (690 to 2930)	Manual Reset	40 (2759)	Locked Man. Reset	450 (3103)	$339.00
P20EB-1	SPDT	7 to 150 (48 to 1034)	25 (172) Fixed	40 (275)	65 (448)	250 (1724)	$297.80
P20EB-2	SPDT	100 to 425 (690 to 2930)	70 (483) Fixed	400 (2758)	330 (2275)	450 (3103)	$325.00

Replacement Timing Relays for P28 and P29 Oil Controls

Part Number	Voltage	Reset	Alarm Circuit	Timing	LIST
RLY13A-616R	120/240 VAC	Manual	No	120	$488.00
RLY13A-613R	12 VAC	Manual	No	120	$488.00
RLY13A-609R	24 VAC or DC	Manual	No	120	$551.00
RLY13A-608R	120/240 VAC	Automatic	No	90	$353.00
RLY13A-602R	120/240 VAC	Manual	No	90	$353.00
RLY13A-610R	120 240 VAC	Manual	No	30	$488.00

JOHNSON CONTROLS

P29 Series Low Pressure Cutout Control (with Time Delay)

Description:

The P29NC provides a low pressure cut-out control with time delay and lockout, which requires manual reset. Standard time delay is 60 seconds. Provides equipment shutdown on failure of lubrication system. Time delay prevents nuisance shutdowns due to momentary fluctuations in oil pressure.



Applications:

- chiller low temperature cutout
- industrial equipment, oil pressure lubrication cutout

Part Number	Switch Action	Min to Max Pressure to Open Contacts PSI (kPa)	Pressure Drop to Close Contacts PSI (kPa)	Max Bellows Pressure PSIG (kPa)	Pressure Connection	Time Delay Setting (1)	LIST
P29NC-2	SPST	20 in. to 100 (-68 to 690)	1 to 3 (7 to 21)	325 (2241)	Locked Man. Reset	60 Seconds (Factory Set)	$966.00
P29NC-3	SPST				36 in. Copper Capillary Tube with 1/4 in. Flare Nut		$966.00

P32 Series Sensitive Pressure Switch



Applications:

Uses of this differential pressure switch are for air only and include:

- air proving with electric duct heaters, humidifiers etc.
- maximum air flow controller for variable volume systems
- reheat duct powered systems
- clogged filter detection
- detection of icing of air conditioning coils and initiation of defrost cycle

Part Number	Contact Action	Range WG (kPa)	Sensitivity at Minimum Setpoint WG (kPa)	Setpoint	Scale Plate	LIST
P32AC-1	SPDT	0.15 to 12 (.037 to 2.99)	.07 (.017)	Adjustable	Yes	$335.00
P32AC-2*	SPDT	0.05 to 5 (.012 to 1.24)	.04 (.01)	Adjustable	Yes	$374.00
P32AF-1	SPDT	0.05 to 5 (.012 to 1.24)	.025 (.006)	Adjustable	Yes	$335.00
P32AF-2*	SPDT	0.05 to 5 (.012 to 1.24)	.025 (.006)	Adjustable	Yes	$374.00
FTG18A-600R		4 in. flanged sensing tube, 2 barbed fittings, 2 No. 10 screws and a gasket				

* Supplied with 1/4 in. compression fitting, 4 in. extension tube, 2 mounting screws, "O" gasket, angle barbed fitting installed.

PRESSURE SWITCHES & CONTROLS

JOHNSON CONTROLS

P45 Series Lube Oil Pressure Cutout Control (with Time Delay)



Description:

The P45 control provides dependable, low lube oil cut-out for pressure lubricated refrigeration compressors. A built-in time delay relay, compensated for ambient temperature, allows for pressure pick-up on start and avoids nuisance shutdowns on short duration pressure losses during the running cycle.

Accessories:

These controls are supplied less mounting brackets.

Part Number	Time Delay	Heater Circuit VAC	Type of Reset	Factory Setting PSIG (kPa)	Refrigerant	Pressure Connection	LIST
COPELAND COMPRESSORS							
P145NCB-12C-JCS	120 sec	120/240	Manual	9** (62)	Non-Corrosive	36 in. Cap. with 1/4 in. Flare Nut	$955.00
CARLYLE COMPRESSORS							
P145NCB-82C-JCS	45 sec	120/240	Manual	6.5*** (45)	Non-Corrosive	36 in. Cap. with 1/4 in. Flare Nut	$955.00

* Replaces Ranco P30-5826
** Replacement for Carlyle/Carrier Part No. HK06CA-500, 6342050

Super Hose Lube Oil Failure Cutout Control



Part Number	Time Delay	Heater Circuit Volts, AC	Type of Reset	Range PSI	Refrigerant	Pressure Connection	LIST
P128AA-1	90 sec	120/240	Manual	8 to 70	Non-Corrosive All-Range	1/4" Male Flared Conn.	$997.00
P128AA-2	60 sec	120/240	Manual	8 to 70	Non-Corrosive All-Range	1/4" Male Flared Conn.	$977.00
P128AA-17	120 sec	120/240	Manual	8 to 70	Non-Corrosive All-Range	1/4" Male Flared Conn.	$986.00
P145NCA-12	120 sec	120/240	Manual	Factory Set 9 psi	Non-Corrosive	1/4" Male Flared Conn.	$631.00
P145NCA-82	45 sec	120/240	Manual	Factory Set 6.5 psi	Non-Corrosive	1/4" Male Flared Conn.	$631.00

(1) Replacement for P28AA-1* Replaces Ranco P30-3701*
(2) Replacement for P28AA-2* Replaces Ranco P30-3601*
(3) Replacement for P28AA-17* Replaces Ranco P30-3801*
(4) Replacement for P45NCA-12* (Copeland Model) Replaces Ranco P30-5826*
(5) Replacement for P45NCA-82* (Carlyle Model)
* 2-H70AB-36 (36" Super Hose) may be required on some applications

JOHNSON CONTROLS

P70 Series Single Pole Low Pressure



Description:

The P70 Series of controls employ a set of SPST contacts that are opened and closed from the pressure actuated bellows. The load-carrying contacts provide direct control of AC motors within the control rating.

Applications:

- air conditioning and refrigeration applications
- control air, water, and oil pressure

Part Number	Switch Action	Range PSIG (kPa)	Differential PSI (kPa)	Pressure Connector	Limited Knob Adjustment	Max Bellows Overrun Pressure PSIG (kPa)	LIST
MICRO-SET FOR R-12, R-22, R134A, R-500, R-502 (R)							
P70AB-12	Close High Open Low	12 in. to 80 (-40 to 345)	Min 5 (34) Max 35 (241)	36 in. Cap. with 1/4 in. Flare Nut	Cutoff*	500 (3447)	$426.00
"ALL RANGE" FOR R-12, R-22, R134A, R-500, R-502 (R)							
P170AB-2C	Close High Open Low	20 in. to 100 (-68 to 690)	Min 7 Max 50	1/4 in. Male Flared Conn.	Cutoff*	325 (2241)	
P70AB-2	Close High Open Low		Min 6 (41) Max 50 (345)	36 in. Cap. with 1/4 in. Flare Nut	Cutoff*		$426.00
P70CA-1	Open High Close Low			36 in. Cap. with 1/4 in. Flare Nut	None		$459.00
FOR AMMONIA							
P70AA-5	Close High Open Low	20 in. to 100 (-68 to 690)	Min 6 (41) Max 50 (345)	1/4 in. Female NPT	None	325 (2241)	$777.00
P70CA-4	Open High Close Low			1/4 in. Female NPT			$831.00

SEC99A UltraCap Armored Capillary

Description:

UltraCap is designed for use with 1/4 in. SAE male flare fitting connectors, such as those found on the Johnson Controls/PENN lines of pressure-actuated controls. Integral Schrader valve depressors are available. UltraCap Armored Capillary is compatible with all common non-corrosive refrigerants.



Specifications:

- Capillary Diameters: Inside 0.062 in. (1.5 mm); Outside 0.125 in. (3 mm)
- Temperature Range: -50 to 350°F (-46 to 177°C)
- Burst Pressure: 3000 psig (20685 kPa)
- Maximum Working Pressure: 600 psig (4137 kPa)
- Suggested Torque to Seal: 8 to 10 lb ft (10.9 to 13.6 N•m

JOHNSON CONTROLS

P70 Series Single Pole High Pressure



Description:

The P70 Series of controls employ a set of SPST contacts that are opened and closed from the pressure actuated bellows. The load-carrying contacts provide direct control of AC motors within the control rating.

Applications:

- air conditioning and refrigeration applications
- control air, water, and oil pressure

Part Number	Switch Action	Range PSIG (kPa)	Differential PSI (kPa)	Pressure Connector	Limited Knob Adjustment	Max Bellows Overrun Pressure PSIG (kPa)	LIST
HEAD PRESSURE FAN CYCLING FOR R-12, R-22, R-134A, R-500, R-502 (R)							
P70AA-118	Close High Open Low	100 to 400 (690 to 2758)	Min 35 (241) Max 200 (1379)	36 in. Cap. with 1/4 in. Flare Nut	None	475 (3275)	$424.00
P70AA-2	Close High Open Low	0 to 150 (0 to 1034)	Min 12 (83) Max 40 (276)	36 in. Cap. with 1/4 in. Flare Nut		325 (2241)	$434.00
"ALL RANGE" FOR R-12, R-22, R134A, R-500, R-502 (R)							
P70CA-2	Open High Close Low	50 to 450 (345 to 3103)	Min 60 (414) Max 150 (1034)	1/4 in. Male Flared Conn.	None	475 (3275)	$436.00
P70CA-3	Open High Close Low			36 in. Cap. with 1/4 in. Flare Nut			$471.00
P70DA-1	Open High Close Low		Lockout (Requires Manual Reset)	36 in. Cap. with 1/4 in. Flare Nut			$474.00
FOR AMMONIA							
P70AA-119	Close High Open Low	50 to 300 (345 to 2068)	Min 20 (138) Max 100 (690)	1/4 in. Female NPT	None	400 (2758)	$749.00
P70CA-5	Open High Close Low	50 to 450 (345 to 3103)	Min 60 (414) Max 150 (1034)	1/4 in. Female NPT		475 (3275)	$824.00
P70DA-2	Open High Close Low		Lockout (Requires Manual Reset)	1/4 in. Female NPT			$862.00

P170 Single Pole Low Pressure



Description:

The P170 Series of controls employ a set of SPST contacts that are opened and closed from pressure actuated bellows.

Applications:

- air conditioning and refrigeration applications
- control air, water, and oil pressure

Part Number	Switch Action	Range PSIG (kPa)	Differential PSI (kPa)	Pressure Connector	Limited Knob Adjustment	Max Bellows Overrun Pressure PSIG (kPa)	LIST
P170AB-2	Close High Open Low	20 in. to 100 (-68 to 690)	Min 6 (41) Max 50 (345)	1/4 in. Male Flared Conn.	Cutout	325 (2240)	$395.00
P170AB-12	Close High Open Low	12 in. to 80 (-41 to 345)	Min 5 (34) Max 35 (241)	1/4 in. Male Flared Conn.	Cutout	500 (3447)	$391.00
P170CA-1	Open High Close Low	20 in. to 100 (-68 to 690)	Min 6 (41) Max 50 (345)	1/4 in. Male Flared Conn.	None	325 (2240)	$474.00

PRESSURE SWITCHES & CONTROLS

JOHNSON CONTROLS

P170 Single Pole High Pressure



Description:

The P170 Series of controls employ a set of SPST contacts that are opened and closed from pressure actuated bellows.

Applications:

- air conditioning and refrigeration applications
- control air, water, and oil pressure

Part Number	Switch Action	Range PSIG (kPa)	Differential PSI (kPa)	Pressure Connector	Limited Knob Adjustment	Max Bellows Overrun Pressure PSIG (kPa)	LIST
P170AA-118	Close High Open Low	100 to 400 (690 to 2758)	Min 35 (241) Max 200 (1379)	1/4 in. Male Flared Conn.	None	475 (3275)	$393.00
P170CA-3	Open High Close Low	50 to 450 (345 to 3100)	Min 60 (414) Max 150 (1034)	1/4 in. Male Flared Conn.	None	475 (3275)	$443.00
P170DA-1	Open High Close Low	50 to 450 (345 to 3100)	Lockout Requires Manual Reset	1/4 in. Male Flared Conn.	None	475 (3275)	$455.00

P70 Series High Pressure Cutout With Alarm Circuit



Description:

This control has two sets of contacts. The main set of contacts controls the main load, and the auxiliary contact simultaneously actuates a signal or auxiliary circuit. The main contacts are (Line-M2) open-high/close-low. The electrical contacts operate from a pressure sensing element.

Applications:

- air conditioning and refrigeration applications
- control air, water, and oil pressure

Part Number	Switch Action	Range PSIG (kPa)	Differential	Pressure Connector	Max Bellows Overrun Pressure PSIG (kPa)	LIST
"ALL RANGE" FOR R-12, R-22, R-134A, R-500, R502 (R)						
P70KA-1	L-M1 Close High L-M2 Open High 4-wire, 2-circuit	Min 50 (345) Max 450 (3103)	Lockout (Requires Manual Reset after Cutout)	36 in. Cap. with 1/4 in. Flare Nut	475 (3275)	$680.00

JOHNSON CONTROLS

P70 Series Single Pole Dual Pressure



Description:

The P70 Series of controls employ a set of SPST contacts that are opened and closed from the pressure actuated bellows. The load-carrying contacts provide direct control of AC motors within the control rating.

Applications:

- air conditioning and refrigeration applications
- control air, water, and oil pressure

Part Number	Switch Action	Low Pressure PSIG (kPa)		High Pressure PSIG (kPa)		Pressure Connector	Limited Knob Adj.	Max Bellows Overrun Pressure PSIG (kPa)	LIST
		Range	Diff	Range	Diff (Non-Adj)				
MICRO-SET FOR R-12, R-22, R134A, R-500, R-502 (R)									
P70LB-6	SPST	12 in. to 80 (-41 to 345)	Min 5 (34) Max 35 (241)	100 to 500 (690 to 2930)	Under 300 PSIG, 55 PSI, Over 300 PSIG, 65 PSI	36 in. Cap. with 1/4 in. Flare Nut	Cutout	500 Low 475 High (3447 Low) (3275 High)	$794.00
P70MA-18	SPST				Lockout (Manual Reset)	36 in. Cap. with 1/4 in. Flare Nut	None		-
"ALL RANGE" FOR R-12, R-22, R134A, R-500, R-502 (R)									
P70LB-1	SPST	20 in. to 100 (-68 to 690)	Min 6 (41) Max 50 (345)	100 to 500 (690 to 2930)	Under 300 PSIG, 55 PSI, Over 300 PSIG, 65 PSI	36 in. Cap. with 1/4 in. Flare Nut	Cutout	325 Low 450 High (2241 Low) (3103 High)	$794.00
P70MA-1	SPST				Lockout (Manual Reset)	36 in. Cap. with 1/4 in. Flare Nut	None		$802.00
P70NA-1	SPST		Lockout (Manual Reset)		Lockout (Manual Reset)	36 in. Cap. with 1/4 in. Flare Nut			$811.00
FOR AMMONIA									
P70LA-2	SPST	20 in. to 100 (-68 to 690)	Min 6 (41) Max 50 (345)	100 to 500 (690 to 2930)	Under 300 PSIG, 55 PSI, Over 300 PSIG, 65 PSI	1/4 in. Female NPT Conn.	None	325 Low 450 High (2241 Low) (3103 High)	-
P70MA-2	SPST				Lockout (Manual Reset)	1/4 in. Female NPT Conn.			$1,557.00

P170 High Pressure Cutout With Alarm Circuit



Description:

This control has two sets of contacts. The main set of contacts controls the main load, and the auxiliary contact simultaneously actuates a signal or auxiliary circuit.

Applications:

- air conditioning and refrigeration applications
- control air, water, and oil pressure

Part Number	Switch Action	Range PSIG (kPa)	Differential PSI (kPa)	Pressure Connector	Max Bellows Overrun Pressure PSIG (kPa)	LIST
P170KA-1	L-M1 Close High L-M2 Open High 4-wire, 2-circuit	Min 50 (345) Max 450 (3100)	Lockout (Requires Manual Reset after Cutout)	1/4 in. Male Flared Conn.	475 (3275)	$637.00

JOHNSON/RANCO/ HONEYWELL 565-666

JOHNSON CONTROLS

P170 Single Pole Dual Pressure

Description:

The P170 Series of controls employ a set of SPST contacts that are opened and closed from pressure actuated bellows.

Applications:

- air conditioning and refrigeration applications
- fully adjustable throughout low and high ranges

Part Number	Switch Action	Low Pressure Range PSIG (kPa)	High Pressure Range PSIG (kPa)	Pressure Connector	Limited Knob Adjustment	Max Bellows Overrun Pressure PSIG (kPa)	LIST
P170LB-1	SPST (A)	20 in. to 100 (-68 to 690)	100 to 500 (690 to 2930)	1/4 in. Male Flared Conn.	Cutout (D)	325 (2241) Low 450 (3100) High	$744.00
P170LB-6	SPST (A)	12 in. to 80 (-41 to 345)	100 to 500 (690 to 2930)	1/4 in. Male Flared Conn.	Cutout (D)	325 (2241) Low 475 (3275) High	$744.00
P170MA-1	SPST (B)	20 in. to 100 (-68 to 690)	100 to 500 (690 to 2930)	1/4 in. Male Flared Conn.	None	325 (2241) Low 450 (3100) High	$765.00
P170MA-18	SPST (B)	12 in. to 80 (-41 to 345)	100 to 500 (690 to 2930)	1/4 in. Male Flared Conn.	None	325 (2241) Low 475 (3275) High	$837.00
P170NA-1	SPST (C)	20 in. to 100 (-68 to 690)	100 to 500 (690 to 2930)	1/4 in. Male Flared Conn.	None	325 (2241) Low 450 (3100) High	$762.00

(A) Automatic reset high and low pressure
(B) Automatic reset low, manual reset high pressure
(C) Manual reset high and low pressure
(D) Adjusting knob supplied on differential (low side cutout setting) to limit adjustment 5 PSI above or below setting



PRESSURE SWITCHES & CONTROLS
JOHNSON CONTROLS

P72 Series Two Pole High Pressure



Description:

The P72 Series of controls employs a set of DPST contacts that are opened and closed from the pressure actuated bellows.

Part Number	Switch Action	Range PSIG (kPa)	Differential (PSI)(kPa)	Pressure Connector	Max Bellows Pressure PSIG (kPa)	Electrical Ratings							LIST
						Motor Ratings VAC	120 1Ø	208* 1Ø	240* 1Ø	220* 2Ø	208 3Ø	220 3Ø	
HEAD PRESSURE FAN CYCLING FOR R-12, R-22, R-134A, R-500, R-502 (R)						Horsepower	2	3	3	5	5	5	
P72AA-27	DPST Close High Open Low	100 to 400 (690 to 2758)	Min 35 (241) Max 200 (1379)	36 in. Cap. with 1/4 in. Flare Nut	325 (2241)	AC Full Load Amp	24.0	24.0	24.0	15.0	15.9	15.0	$645.00
						AC Locked Rotor Amp	144.0	144.0	144.0	90.0	95.4	90.0	
"ALL RANGE" FOR R-12, R-22, R-134A, R-500, R502 (R)													
P72CA-2	DPST Open High Close Low	50 to 450 (345 to 3103)	Min 60 (414) Max 150 (1034)	36 in. Cap. with 1/4 in. Flare Nut	475 (3275)	AC Non-Inductive Amp	24.0	24.0	24.0	-	-	-	$666.00
P72DA-1	DPST Open High Close Low		Lockout (Requires Manual Reset)	36 in. Cap. with 1/4 in. Flare Nut		DC Non-Inductive Amp	3.0	-	0.5	-	-	-	$690.00
						Pilot Duty - 125 VA, 120 to 600 VAC 57.5 VA, 120 to 300 VDC							

P72 Series Two Pole Dual Pressure



Description:

The P72 Series of controls employ a set of DPST contacts that are opened and closed from the pressure actuated bellows.

Part Number	Switch Action	Low Pressure PSIG (kPa)		High Pressure PSIG (kPa)		Pressure Connector	Limited Knob Adj.	Max Bellows Overrun Pressure PSIG (kPa)	LIST
		Range	Diff	Range	Diff (Non-Adj)				
MICRO-SET FOR R-12, R-22, R134A, R-500, R-502 (R)									
P72LA-1	DPST	20 in. to 100 (-68 to 690)	Min 6 (41) Max 50 (345)	100 to 500 (690 to 2930)	Under 300 PSIG, 55 PSI, Over 300 PSIG, 65 PSI	36 in. Cap. with 1/4 in. Flare Nut	None	325 Low 475 High (2241 Low) (3275 High)	-
P72LB-1	DPST				Under 300 PSIG, 55 PSI, Over 300 PSIG, 65 PSI	36 in. Cap. with 1/4 in. Flare Nut	Yes (1)		$1,010.00
P72MA-1	DPST				Lockout (Manual Reset)	36 in. Cap. with 1/4 in. Flare Nut	None		$1,038.00
P72NA-1	DPST		Lockout (req. Manual reset)		Lockout (Manual Reset)	36 in. Cap. with 1/4 in. Flare Nut	None		$1,028.00

JOHNSON CONTROLS



P74 Series Differential Pressure Controls

Description:

The Series P74 measures the pressure difference between two sources (supply and return lines). A change in pressure at either control element will reposition the switching mechanism to cause corrective action of supplementary control equipment.

Applications:

- pressure sensing on chillers, water cooled condensers, or heating systems for proof of flow
- lube oil failure cutout for refrigeration compressors (same as the P28, but does not incorporate time delay)

Part #	Switch Action	Pressure Diff Range PSI (kPa)	Pressure Connections	Electrical Ratings	Bellows Material	LIST
FOR ALL REFRIGERANTS EXCEPT AMMONIA						
P74AA-1	SPST Closes on Decreases In Pressure Diff	8 to 70 Adjustable (55 to 483)	36 in. Cap. with 1/4 in. Flare Nut	20 Amp 120 VAC 50/60 Hz	Stainless Steel	$797.00
P74BA-1	SPST Opens on Decreases In Pressure Diff					$767.00
P74EA-8C	SPDT (Snap-Acting)	2 to 26 Adjustable (14 to 207)	36 in. Cap. with 1/4 in. Flare Nut	16 Amp 120 VAC 50/60 Hz	Brass	$777.00
P74FA-1	SPDT (Snap-Acting)	8 to 60 (55 to 414)	1/4 in. Male Flare	6 Amp 120 VAC 50/60 Hz	Brass	$738.00

P100 Encapsulated Pressure Switches

Description:

Nonadjustable, SPST, direct mount switches for use with noncorrosive refrigerants. The switches are available with automatic reset in both open low and open high configurations and manual reset with open high action.

- 1/4" female flare fitting with built-in Schrader type depressor

Part Number	Switch Action	Application	Setting - psig (kPa)		LIST
			Opens	Closes	
P100AP-201C	Open On Fall Open On Rise	Low Cutout	10 (69)	40 (276)	$111.70
P100AP-2C			35 (241)	60 (414)	$111.70
P100AP-3C		Fan Cycling	150 (1034)	225 (1551)	$113.70
P100AP-4C			170 (1172)	250 (1724)	$111.70
P100AC-1C		Low Cutout	5 (34)	20 (138)	-
P100AC-2C			15 (103)	30 (207)	$126.20
P100CP-1C		High Cutout	400 (2758)	300 (2068)	$111.70
P100CP-2C			425 (2930)	325 (2241)	$113.70
P100CC-9C			275 (1896)	175 (1207)	$126.20
P100DA-1		High Limit	410 (2827)	Lockout Man. Reset	$200.60
P100DA-2			475 (3275)	Lockout Man. Reset	$204.70
P100DC-3			375 (2586)	Lockout Man. Reset	$215.10

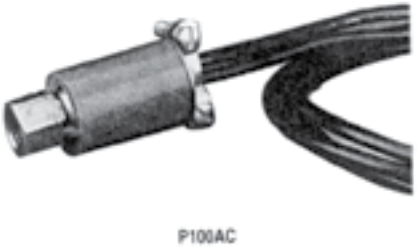

P100AC

PRESSURE CONTROL HOSES
YELLOW JACKET

Replaces regular copper capillary tubing on failure cut out controls and refrigeration pressure controls, saving you money. Also eliminates capillary failure due to work hardening from vibration. Easy to install, long lasting. Works better than Teflon hose.

- Operates to 800 psi and 266°F
- Hex style fittings with 1/4" SAE thread. Straight or 90°

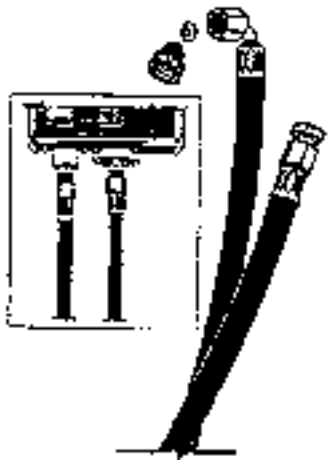

Length	Str. x 90°	LIST
12"	78712	$103.10
18"	78718	$94.00
24"	78724	$102.60
30"	78730	$116.70
36"	78736	$118.70
48"	78748	$136.00
60"	78760	$160.10
72"	78772	$177.80

ELECTRONIC LUBE OIL CONTROL

The P545 Series Electronic Lube Oil Control is designed for use on refrigeration compressors equipped with an oil pump that accepts single-point differential pressure transducer. The P545 senses net lube oil pressure and
de-energizes the compressor if lube oil pressure falls below the manufacturers recommendation for longer than the time delay. Front-mount LEDs indicate the status of the lubrication system and a user-selectable time delay can be set to minimize compressor short cycling.

A Johnson Control R10A Current Sensing Relay is also available to prevent the P545 from locking out during normal compressor off cycles.

Features:

- SPDT relay contacts for liquid line solenoid and alarm applications
- Relay contact output for compressor
- Built-in test circuit
- Improved noise immunity
- Selection of anti-short-cycle time delay on loss of power
- User friendly display panel
- Standardized mounting, outer case size and wiring



Part #	Description	LIST
P545NCB-22-JCS	120 second delay before lockout, fixed setpoint pressure: 9 psi, 36 in. cable, includes sensor (Copeland)	$930.00
P545NCB-25C	90 second delay befroe lockout, fixed setpoint pressure: 6.5 psi, 36 in. cable, includes sensor (Bitzer)	$967.00
P545NCB-82	120 second delay befroe lockout, fixed setpoint pressure: 6.5 psi, 36 in. cable, includes sensor (Carlyle)	$1,337.00

ELECTRONIC FAN SPEED CONTROL
JOHNSON CONTROLS

P266 Series Single-Phase Condenser Fan Speed Control

Description:

The P266 Series Single-Phase Condenser Fan Speed Control is a cost-effective, weather-resistant, durable motor speed control.



Features:

- One or two durable, accurate, stainless steel, remote-mount pressure transducers
- Available in 208/240 VAC (8 or 12 A), 380/460 VAC (4 A), or 460/575 VAC (4 A)
- Wide, adjustable pressure throttling range
- Optional auxiliary fan control
- Optional low-speed capacitor mode
- NEMA 3R, (IP54) enclosure with integral metal heat-sink and stand-off mounting feet

P266 Series Fan Speed Control Model and Kit Product Code Numbers, Descriptions, and Details

Part #	Description	Transducer Model Included in Kit	Voltage (VAC)	Maximum Output Amperes	High VAC Triacs	Available Auxiliary Fan Control Circuits[1]	LIST
P266AAA-100	P266 Fan Speed Control (only) (No Sensor)	N/A	208/240	8	3	0	-
P266ABA-100	P266 Fan Speed Control (only) (No Sensor)	N/A	208/240	8	3	3	$1,766.00
P266ACA-100	P266 Fan Speed Control (only) (No Sensor)	N/A	208/240	8	1	0	$1,478.00
P266BHA-100	P266 Fan Speed Control (only) (No Sensor)	N/A	460/575	4	2	3	$1,825.00
P266BCA-100	P266 Fan Speed Control (only) (No Sensor)	N/A	460/575	4	1	0	$1,253.00
P266ABA-1K	P266 Fan Speed Control with one P266 Pressure Transducer and one 2 m (6.6 ft) cable	0–508 psi	208/240	8	3	3	-
P266ABA-3K	P266 Fan Speed Control with one P266 Pressure Transducer and one 2 m (6.6 ft) cable	0–754 psi	208/240	8	3	3	-
P266ABA-2K	P266 Fan Speed Control with two P266 Pressure Transducers and two 2 m (6.6 ft) cables	0–508 psi	208/240	8	3	3	-
P266BHA-4K	P266 Fan Speed Control with two P266 Pressure Transducers and two 2 m (6.6 ft) cables	0–754 psi	460/575	4	2	3	-

Note: Factory default settings - Start Voltage is set to 40% of the supply line-voltage. End Voltage is set to 95% of the supply line-voltage. Start Pressure is set to 44% of the P266 transducer's total pressure range. End Pressure is set to 51% of the P266 transducer's total pressure range

1. 24 VAC Class 2 at 1/4 A.

P266 Series SNR Electronic Pressure Transducers

Part #	Description	LIST
P266SNR-1	Electronic Pressure Transducer: 0 to 35 bar (0 to 508 psi) total range with a 1/4 in. SAE Female Flare connection and a 2 meter (6.6 ft) cable.	$471.00
P266SNR-2	Electronic Pressure Transducer: 0 to 52 bar (0 to 754 psi) total range with a 1/4 in. SAE Female Flare connection and a 2 meter (6.6 ft) cable.	$471.00

VARIABLE FREQUENCY DRIVES

JOHNSON CONTROLS

VFD66 3 Phase Condenser Fan Speed Control

Description

The VFD66 Series Condenser Fan Speed Controls are designed for speed control of 3-phase condenser fan motors in refrigeration and HVAC systems. The VFD66 controls regulate condenser fan motor speed by varying the frequency and voltage of the power supplied to the motor.

The VFD66 controls use input signals from various devices to adjust fan speed and optimize condenser head pressure, especially during low ambient conditions.

Condenser fan speed may be controlled by pressure or temperature. The VFD66 controls accept input signals from the P35 Pressure Transducer, P399 Electronic Pressure Transducer, System 350™ controls or any other device that provides a 0-5 VDC or 0-10 VDC analog input signal.

Applications

The VFD66 controls are intended for air-cooled condenser fan speed control in refrigeration and HVAC applications:

- commercial air-cooled condensers
- cooling tower fans
- fans in evaporative condensing units.

The VFD66 controls allow the system to:

- maintain optimum condenser head pressure in low ambient temperature conditions
- eliminate short cycling in low ambient or changing load conditions
- match the condenser fan speed to the load on the condenser, which increases the efficiency of the refrigeration system. This can reduce electricity cost and help maintain a constant evaporator temperature.



VFD Condenser Fan for Speed Control

Features

- allows use on dual refrigeration circuits cooled by a single fan
- provides installation ease and flexibility
- handles 3-phase motors ranging from fractional to multiple hp at 208/230 VAC or 400/460 VAC

Selection Table

NEMA 1 Enclosure without Alarm Output		NEMA 1 Enclosure with Alarm Output	Voltage	Max. Amp
VFD66 Model	**Kit = VFD66 Model Packaged with P35AG-9200**			
VFD66AAA-1C	**VFD66AAA-100C**	**VFD66AAE-1C**	230 VAC 50 Hz, 208/230 VAC 60 Hz	4.0
VFD66BAA-1C	**VFD66BAA-100C**	**—**	400 VAC 50 Hz, 460 VAC 60 Hz	1.8
VFD66CAA-1C	**VFD66CAA-100C**	**VFD66CAE-1C**	230 VAC 50 Hz, 208/230 VAC 60 Hz	7.5
VFD66DAA-1C	**VFD66DAA-100C**	**VFD66DAE-1C**	400 VAC 50 Hz, 460 VAC 60 Hz	3.6
VFD66EBA-1C	**VFD66EBA-100C**	**VFD66EBE-1C**	230 VAC 50 Hz, 208/230 VAC 60 Hz	10.6
VFD66FBA-1C		**VFD66FBE-1C**	400 VAC 50 Hz, 460 VAC 60 Hz	5.5

Accessories

Part Number	Description
P35AG-9200R	PRESSURE TRANSDUCER, 0-350 PSI RANGE
VFD66-CVR-1C	EXTERNAL POTENTIOMETER REPLACEMENT COVER
A350PS-1C	PROPORTIONAL PLUS INTEGRAL TEMPERATURE CONTROL
P352PN-3C	PROPORTIONAL PLUS INTEGRAL PRESSURE CONTROL
P499RAP-101K	PRESSURE TRANSDUCER 0-100 PSIS RANGE WITH 2 METER WIRING HARNESS AND STYLE 49 CONNECTION
P499RCP-101K	PRESSURE TRANSDUCER 0-100 PSIS RANGE WITH 2 METER WIRING HARNESS AND STYLE 45 CONNECTION
P499RAP-105K	PRESSURE TRANSDUCER 0-500 PSIS RANGE WITH 2 METER WIRING HARNESS AND STYLE 49 CONNECTION
P499RCP-105K	PRESSURE TRANSDUCER 0-500 PSIS RANGE WITH 2 METER WIRING HARNESS STYLE 45 CONNECTION
P499RAP-107K	PRESSURE TRANSDUCER 0-750 PSIS WITH 2 METER WIRING HARNESS AND STYLE 45 CONNECTION
P499RCP-107K	PRESSURE TRANSDUCER 0-750 PSIS WITH 2 METER WIRING HARNESS AND STYLE 45 CONNECTION
P499RAP-101C	PRESSURE TRANSDUCER, 0 TO 100 PSIS, 5 VDC, 1/8" NPT PORT.
P499RCP-101C	PRESSURE TRANSDUCER, 0 TO 100 PSIS, 5 VDC, 1/4" SAE FEMALE/SCHRADER.
P499RAP-105C	PRESSURE TRANSDUCER, 0 TO 500 PSIS, 5 VDC, 1/8" NPT PORT.
P499RCP-105C	PRESSURE TRANSDUCER, 0 TO 500 PSIS, 5 VDC, 1/4" SAE FEMALE/SCHRADER.
P499RAP-107C	PRESSURE TRANSDUCER, 0 TO 750 PSIS, 5 VDC, 1/8" NPT PORT.
N/A (Old Part #: P399CAC-1C)	PRESSURE TRANSDUCER, 0 TO 750 PSIS, 5 VDC, 1/4" SAE FEMALE/SCHRADER.
WHA-PKD3-200C*	CABLE HARNESS; 6.6 FT LONG(2.0 METERS) W/ PIGTAILS, FOR USE WITH THE P499.
WHA-PKD3-400C*	CABLE HARNESS; 13.1 FT LONG(4.0 METERS) W/ PIGTAILS, FOR USE WITH THE P499.
WHA-PKD3-600C*	WIRE HARNESS ASSY, 19.7 FT(6.0 METERS) LONG FOR USE WITH THE P499.

** The P399 harnesses are still available and are interchangeable with the new P499 harnesses.*

SYSTEM 450 CONTROL SERIES

JOHNSON CONTROLS

System 450™ is a family of modular, digital electronic controls that is easily assembled and set up to provide reliable temperature, pressure, and humidity control for a wide variety of HVACR applications, commercial process applications, and industrial process applications.The System 450 control system is designed to replace System 350™ and System 27 control systems, and to provide many additional features and benefits with fewer than twenty model variations. Most System450 control modules can control temperature, pressure, and humidity systems simultaneously.

Input(s)	Application	Basic Control	Power Module	Expansion Modules	Temperature Sensors	Pressure Sensors	Humidity Sensors	Static Pressure Transmitters	Accessories
• Temperature • Pressure • Humidity	On-Off	 **C450CBN-3** (single output) **C450CCN-3** (dual output)	 **C450YNN-1**	 **C450SBN-3** (single output up to 9) **C450SCN-3** (dual output up to 4)	 A99 Series TE -6000 Series	 P499 Series	 HE-67S3 Series	 DPT-2650 Series	BKT287 DIN Rail WHA-C450-100C Module Connection
• Temperature • Pressure	Reset	 **C450RBN-3** (single on/off output) **C450RCN-3** (dual on/off output)	 **C450YNN-1**	 **C450SBN-3** (single output up to 9) **C450SCN-3** (dual output up to 4)	 Come with two temp sensors		 HE-67S3 Series	 DPT-2650 Series	BKT287 DIN Rail WHA-C450-100C Module Connection cable
• Temperature • Pressure • Humidity	Proportional	 **C450CPN-3** (single output) **C450CQN-3** (dual output)	 **C450YNN-1**	 **C450SPN-1** (single output up to 9) **C450SQN-1** (dual output up to 4)	 A99 Series TE -6000 Series	 P499 Series	 HE-67S3 Series	 DPT-2650 Series	BKT287 DIN Rail WHA-C450-100C Module Connection
• Temperature • Pressure • Humidity	Hybrid (EC Motors)	 **C450CPW-100** (single proportional output & high input signal select)	 **C450YNN-1**	 **C450SPN-1** (single output up to 9)	 A99 Series TE -6000 Series	 P499 Series	 HE-67S3 Series	 DPT-2650 Series	BKT287 DIN Rail WHA-C450-100C Module Connection cable
• Temperature • Pressure • Humidity	Communicating	 **C450CEN-1** (ethernet module) **C450CRN-3** (RS485 Modbus RTU)	 **C450YNN-1**	 **C450SPN-1** (single output up to 10) **C450SQN-1** (dual output up to 5)	 A99 Series TE -6000 Series	 P499 Series	 HE-67S3 Series	 DPT-2650 Series	BKT287 DIN Rail WHA-C450-100C Module Connection

SYSTEM 450 CONTROL SERIES

JOHNSON CONTROLS

System 450™ Series Modular Controls

System 450™ is a family of modular, digital electronic controls that is easily assembled and set up to provide reliable temperature, pressure, and humidity control for a wide variety of HVACR applications, commercial process applications, and industrial process applications.

The System450 control system is designed to replace System 350™ and System 27 control systems, and to provide many additional features and benefits with fewer than twenty model variations.

System450 control modules provide a field-configurable out-of-the-box solution. Most System450 control modules can control temperature, pressure, and humidity systems simultaneously.

System 450 Control Modules with Communications enable you to connect System 450 control systems to Modbus® or Ethernet networks for remote monitoring and setup. The Modbus communications control module is an RS485, RTU-compliant slave device. The Ethernet communications control module has an integral web server that can deliver web pages by means of a direct connection, on your LAN, or across the Internet.

System 450 Reset Control Modules provide many of the features of the standard models for temperature and humidity control. In addition, these modules provide setpoint reset, real-time setback scheduling, and run-time balancing (equal run time) capability.

The System 450 Control Module with Hybrid Analog Output has a single self-selecting analog output to optimize and extend the controlled speed range of variable speed electronically commutated (EC) motors.Refer to the following documents for important product application information.

- System 450™ Series Modular Controls Product Bulletin (LIT-12011458)
- System 450™ Series Modular Control Systems with Standard Control Modules Technical Bulletin (LIT-12011459)
- System 450™ Series Modular Control Systems with Reset Control Modules Technical Bulletin (LIT-12011842)
- System 450™ Series Modular Control Systems with Communications Control Modules Technical Bulletin (LIT-12011826)

Features

- Durable, compact, interchangeable modular components with plug-together connectors and DIN rail or direct wall mount capability eliminate field wiring between modules and allow you to quickly and easily design, assemble, install, and upgrade your control systems.
- Versatile, multipurpose, field-configurable control modules and expansion modules designed for global use allow you to create a wide variety of application-specific control systems capable of controlling temperature, pressure, or humidity, or all three conditions simultaneously, with only a small suite of module models.
- Up to three hard-wired input sensors and up to ten relay or analog outputs (in any combination) per control system allow you to build complex custom control systems while reducing your control system cost to only the cost of the required components.
- Control Modules with bright backlit LCDs and four-button touch pad user interfaces provide quick, clear, visual status of your System450 control system inputs and outputs with the touch of a button and enable you to quickly and easily set up and adjust your control system.
- Multipurpose, all-in-one control modules enable simple stand-alone, single-module control systems that are temperature, pressure, and humidity capable out of the box and easy to set up in the field to replace a wide variety of OEM HVACR and process controls.
- An extensive suite of compatible temperature and humidity sensors, and pressure transducers allows you to monitor and control a wide range of HVACR and process conditions in a variety of standard and global units of measurement.
- High input signal selection enables your control system to monitor a temperature, pressure, or humidity condition with two or three sensors (of the same type) and control your system outputs based on the highest condition value sensed by the referenced sensors.
- Differential control enables your control system to monitor and maintain a temperature, pressure, or humidity differential between two sensor points within a system, process, or space.



System 450 Control System with a Control, Power, and Expansion Module

The Reset Control modules have additional features:

- Adjustable minimum and maximum setpoint temperatures (reset control modules only) enable compliance with the manufacturer's specifications for your controlled HVACR and process equipment.
- Selectable shutdown-high and shutdown-low temperature settings (reset control modules only) saves you energy by shutting down controlled equipment when the ambient temperature either rises or drops to a point where heating or cooling is no longer required.
- Real time clock and adjustable setback temperature (reset control modules only) save you energy by setting back heating, cooling, or humidity setpoints during scheduled unoccupied periods (24-hour day, 7-day week schedule).
- User-defined reset control capability (reset control modules only) saves you energy in a wide variety of temperature and humidity reset control applications by adjusting the temperature or humidity control loop, based on changes in ambient outdoor temperature or other uncontrolled condition.

JOHNSON/RANCO/
HONEYWELL 565-666

The performance specifications are nominal and conform to acceptable industry standards. For applications at conditions beyond these specifications, consult the local Johnson Controls office.Johnson Controls, Inc. shall not be liable for damages resulting from misapplication or misuse of its products.

System 450™ Series Modular Controls (Continued)

The Control Modules with Communications have additional features:

- Ethernet communication capability through a built-in web server (Ethernet Control Modules only) allows you to monitor your control system status and set up or change the parameters by means of a direct Ethernet cable connection, through a LAN connection, or over the Internet. The built in web server delivers user-friendly web pages to client browsers on a desktop, laptop, tablet, or smart device.
- The Web page server on Ethernet communication modules provides a simple, intuitive web interface for easy remote monitoring, setup, adjustment and remote monitoring of your control systems across Ethernet networks.
- RS485, RTU-compliant Modbus® network communication capability (Modbus control modules only) enables a head-end RS485 Modbus master controller to read and write control system status and setup parameters to the System 450 Modbus communication control module.
- Password protection for local access (Ethernet and Modbus control modules only) and password protection for remote access (Ethernet control module only) deters unauthorized changes to the control system settings, but allows local and remote monitoring of your control system status.
- Analog output signal limiting features (communication control modules only) allow you to select the rate and condition range at which the control updates the analog output signal, potentially reducing wear on the controlled equipment.
- Binary input with time delay (communication control modules only) allows you to use an external set of dry contacts and selectable time delays to control relay outputs.

Applications

You can create a wide variety of custom, application-specific control systems with System 450 modules. The following are some common control application examples:

- Temperature control
- Pressure control
- Humidity control
- Multipurpose control
- Reset and setback control
- High input-signal selection
- Differential control

Temperature Control

- Temperature monitoring and alarming
- On/Off staged control of boilers and chillers
- Proportional stage control of boilers and chillers
- Boiler and chiller pump control
- Heating and cooling control with deadband
- Floating temperature control of damper and valve actuators
- Cooling tower fan speed/stage control based on water temperature
- Supply, make-up, and mixed air temperature control
- Temperature actuated valve control
- Supply and make-up air damper and fan control
- Condenser fan staging or speed control based on condenser temperature

Refrigerant Pressure Control

- Condenser fan cycling and stage control
- Multispeed condenser fan control
- Floating pressure control of damper and valve actuators.
- Condenser fan speed and damper control
- High and low pressure cutout control
- Staged compressor control
- Cooling tower fan speed control based on high-side pressure
- Direct speed control of electronically commutated (EC) condenser fan motors (C450CPW-100 model)

Other Pressure Control

- Relief damper and fan control for building pressurization
- Constant static pressure control

Humidity Control

- On/Off humidification and dehumidification control
- Proportional humidification and dehumidification control
- Multistage humidification and dehumidification control
- Humidity monitoring and alarming

Multipurpose Control

- Temperature and pressure based refrigeration rack control
- Temperature and humidity control of wine cellars and greenhouses
- Temperature, humidity, and static pressure control of clean rooms and greenhouses
- Dehumidification with reheat control

Reset Control

- Boiler supply water temperature reset control based on outside air temperature
- Chiller supply water temperature reset control based on outside air temperature
- VAV zone temperature control based on outside air temperature
- Humidity reset based on outside air temperature
- Staged applications with runtime balancing
- Real-time Occupied/Unoccupied Setback

High Input Signal Selection

- Pressure-based fan speed or fan cycling control on multi-circuit condensers
- Temperature-based fan speed or fan cycling control on multi-circuit condensers

Differential Control

- Air and fluid pump-flow monitoring and alarming
- Air and fluid filter status monitoring and alarming
- Chiller barrel flow monitoring, control, and alarming
- Solar air and water heating applications

Note:Communications modules add network communication to any application of your choosing, except those requiring reset, setback, or EC motor control.

Repair Information

If a System 450 module fails to operate within its specifications, replace the module.

System 450™ Series Modular Controls (Continued)

Selection Charts

System 450 Modules and Accessories Ordering Information

Product Code Number	Product Description
C450CBN-3C	Standard Control Module with LCD, Four-Button Touchpad UI, and Relay Output; provides one relay output (SPDT line-voltage relay) for SPDT control.
C450CCN-3C	Standard Control Module with LCD, Four-Button Touchpad UI, and Relay Output; provides two relay outputs (SPDT line-voltage relays) for SPDT control.
C450CEN-1C	Control Module with Ethernet Communications, LCD, and Four-Button Touchpad UI. (No onboard outputs available on control modules with network communications capabilities.)
C450CPN-3C	Standard Control Module with LCD, Four-Button Touchpad UI, and Analog Output; provides one analog output (0–10 VDC or 4–20 mA self-selecting signal) for proportional control.
C450CPW-100C	Hybrid Analog Output Control Module with LCD, Four-Button Touchpad UI, Hybrid Analog Output and Optional High Input Signal Select; provides one hybrid analog output and optional high input signal select primarily used for variable-speed EC motor speed control. Only Analog Output 1 (OUTA1) can be configured as a hybrid analog output and/or use the High Input Signal Selection feature. These features are not available for any of the other outputs in a System 450 control system that uses the C450CPW-100C as the control module.
C450CQN-4C	Standard Control Module with LCD and Four-Button Touchpad UI, and Analog Output; provides two analog outputs (0–10 VDC or 4–20 mA self-selecting signals) for proportional control.
C450CRN-1C	Control Module with RS485 Modbus Communications, LCD, and Four-Button Touchpad UI. (No onboard outputs available on control modules with network communications capabilities.)
C450RBN-3C	Reset Control Module with LCD, Four-Button Touchpad UI, and SPDT relay output; provides one SPDT output relay. One A99BC-25C temperature sensor with 0.25 m (9-1/4 in.) silicon leads and one A99BC-300C temperature sensor with 3 m (9 ft 10 in.) silicon leads are included in the box with the Reset Control Module.
C450RCN-3C	Reset Control Module with LCD, Four-Button Touchpad UI, and SPDT relay output; provides two SPDT output relays. One A99BC-25C temperature sensor with 0.25 m (9-1/4 in.) silicon leads and one A99BC-300C temperature sensor with 3 m (9 ft 10 in.) silicon leads are included in the box with the Reset Control Module.
C450SBN-3C	Relay Output Expansion Module; provides one SPDT line-voltage relay output.
C450SCN-3C	Relay Output Expansion Module; provides two SPDT line-voltage relay outputs.
C450SPN-1C	Analog Output Expansion Module; provides one analog output (0–10 VDC or 4–20 mA self-selecting signal) for proportional control.
C450SQN-1C	Analog Output Expansion Module; provides two analog outputs (0–10 VDC or 4–20 mA self-selecting signals) for proportional control.
C450YNN-1C	Power Module; provides 24 V to System 450 Module Assembly; 120 VAC or 240 VAC supply power input terminals.
BKT287-1R	DIN Rail; 0.30 m (12 in.) long
BKT287-2R	DIN Rail; 1 m (39-1/3 in.) long
BKT287-3R	DIN Rail; 0.61 m (24 in.) long
BKT287-4R	DIN Rail; 0.36 m (14 in.) long
PLT344-1R	DIN Rail End Clamps (2 clamps)
WHA-C450-100C	System 450 module connection extension cable, 100 cm (3.3 ft) long

System 450 Compatible A99B Temperature Sensors and Accessories Ordering Information[1]

Product Code Number	Product Description
A99BA-200C	PTC Silicon Sensor with Shielded Cable; Cable Length 2 m (6-1/2 ft); Sensor Temperature Range: -40 to 120°C (-40 to 250°F) Cable Jacket Temperature Range: -40 to 100°C (-40 to 212°F)
A99BB-25C	PTC Silicon Sensor with PVC Cable; Cable Length 0.25 m (9-3/4 in.); Sensor Temperature Range: -40 to 120°C (-40 to 250°F) Cable Jacket Temperature Range: -40 to 100°C (-40 to 212°F)
A99BB-200C	PTC Silicon Sensor with PVC Cable; Cable Length 2 m (6-1/2 ft); Sensor Temperature Range: -40 to 120°C (-40 to 250°F) Cable Jacket Temperature Range: -40 to 100°C (-40 to 212°F)
A99BB-300C	PTC Silicon Sensor with PVC Cable; Cable Length 3 m (9-3/4 ft); Sensor Temperature Range: -40 to 120°C (-40 to 250°F) Cable Jacket Temperature Range: -40 to 100°C (-40 to 212°F)
A99BB-500C	PTC Silicon Sensor with PVC Cable; Cable Length 5 m (16-3/8 ft); Sensor Temperature Range: -40 to 120°C (-40 to 250°F) Cable Jacket Temperature Range: -40 to 100°C (-40 to 212°F)
A99BB-600C	PTC Silicon Sensor with PVC Cable; Cable Length 6 m (19-1/2 ft); Sensor Temperature Range: -40 to 120°C (-40 to 250°F) Cable Jacket Temperature Range: -40 to 100°C (-40 to 212°F)
A99BC-25C	PTC Silicon Sensor with High Temperature Silicon Cable; Cable Length 0.25 m (9-3/4 in.); Sensor Temperature Range: -40 to 120°C (-40 to 250°F) Cable Jacket Rated for Full Sensor Temperature Range.
A99BC-300C	PTC Silicon Sensor with High Temperature Silicon Cable; Cable Length 3 m (9-3/4 ft) Sensor Temperature Range: -40 to 120°C (-40 to 250°F) Cable Jacket Rated for Full Sensor Temperature Range.
A99BC-1500C	PTC Silicon Sensor with High Temperature Silicon Cable; Cable Length 15 m (49 ft) Sensor Temperature Range: -40 to 120°C (-40 to 250°F) Cable Jacket Rated for Full Sensor Temperature Range.
BOX10A-600R	PVC Enclosure for A99 Sensor; Includes Wire Nuts and Conduit Connector (for Outdoor Sensor)

System 450™ Series Modular Controls (Continued)

System 450 Compatible A99B Temperature Sensors and Accessories Ordering Information[1] (Continued)

Product Code Number	Product Description
WEL11A-601R	Immersion Well for A99 Sensor Liquid Sensing Applications
A99-CLP-1	Mounting Clip for A99 Temperature Sensor
ADP11A-600R	Conduit Adaptor, 1/2 in. Snap-Fit EMT Conduit Adaptor (box of 10)
TE-6001-1	Duct Mounting Hardware with Handy Box for A99 Sensor
TE-6001-11	Duct Mounting Hardware without Handy Box for A99 Sensor
SHL10A-603R	Sun Shield (for Use with Outside A99 Sensors in Sunny Locations)

1. Refer to the *A99B Series Temperature Sensors Product/Technical Bulletin (LIT-125186)* on the Johnson Controls® Product Literature web site for more information.

System 450 Compatible TE-6000 Series 1,000 Ohm Nickel Temperature Sensors and Accessories Ordering Information

Product Code Number	Product Description
TE-6000-x	TE6000 Series 1,000 ohm at 70°F nickel temperature sensors (only). Only the TE-6000-6 sensor can be used for the entire HI°C and HI°F temperature range. Different sensing element packages are available for various applications.For a complete list of compatible 1,000 ohm nickel sensors, including sensor descriptions, technical specifications, and mounting accessories, refer to the *TE-6000 Series Temperature Sensing Elements Product Bulletin (LIT-216288)*. (System 450 Sensor Types HI°C and HI°F)

System 450 Compatible TE-6300 Series 1,000 Ohm Nickel Temperature Sensors and Accessories Ordering Information

Product Code Number	Product Description
TE-631xx-x	TE6300 Series 1,000 ohm at 70°F nickel averaging and 1,000 ohm thin-film nickel temperature sensors (only). For a complete list of compatible 1,000 ohm nickel averaging and thin-film nickel sensors, including sensor descriptions, technical specifications, and mounting accessories, refer to the *TE-6300 Series Temperature Sensors Product Bulletin (LIT-216320)*. (System 450 Sensor Types HI°C and HI°F)

System 450 Compatible TE-68NT-0N00S 1,000 Ohm Nickel Temperature Sensor Ordering Information

Product Code Number	Product Description
TE-68NT-0N00S	TE6800 Series 1,000 ohm nickel temperature sensor for wall-mount applications. For more information, including sensor description, technical specifications, and mounting accessories, refer to the *TE-6800 Series Temperature Sensors Product Bulletin (LIT-12011542)*. (System 450 Sensor Types HI°C and HI°F**)**

System 450 Compatible HE67S3 Type Humidity Sensors with Integral A99B Temperature Sensor Ordering Information[1]

Product Code Number	Product Description
HE-67S3-0N0BT	Wall Mount Humidity Sensor with A99B Type Temperature Sensor: 10 to 90% RH; 0 to 60°C (32 to 140°F)
HE-67S3-0N00P	Duct Mount Humidity Sensor with A99B Type Temperature Sensor: 10 to 90% RH; 0 to 60°C (32 to 140°F)

1. The HE-67S3 sensors require 24 VAC input and must use the 0–5 VDC output. Refer to the *TrueRH Series HE-67xx Humidity Element with Temperature Sensors Product Bulletin (LIT-216245)* on the Johnson Controls Product Literature website for more information, including technical specifications and mounting accessories.

System 450 Compatible HE6800 Series Humidity Transmitters with Temperature Sensor Ordering Information[1]

Product Code Number	Product Description
HE-68N2-0N00WS	Wall Mount Humidity Transmitter with Nickel Temperature Sensor: 10 to 90 ±2% RH; 0 to 55°C (32 to 131°F)
HE-68N3-0N00WS	Wall Mount Humidity Transmitter with Nickel Temperature Sensor: 10 to 90 ±3% RH; 0 to 55°C (32 to 131°F)

1. The HE-6800 transmitters require 24 VAC input and must use the 0–5 VDC output. Refer to the *HE-6800 Series Humidity Transmitters with Temperature Sensor Product Bulletin (LIT-12011625)* on the Johnson Controls Product Literature website for more information, including technical specifications and mounting accessories.

System 450 Compatible Low Pressure Differential Transducer Ordering Information[1] [2]

Product Code Number	Product Description
DPT2650-R25B-AB	Low Pressure Differential Transducer: -0.25 to 0.25 in. W.C. (System 450 Sensor Type: **P 0.25**)[3]
DPT2650-0R5D-AB	Low Pressure Differential Transducer: 0 to 0.5 in. W.C. (System 450 Sensor Type: **P 0.5**)
DPT2650-2R5D-AB	Low Pressure Differential Transducer: 0 to 2.5 in. W.C. (System 450 Sensor Type: **P 2.5**)
DPT2650-005D-AB	Low Pressure Differential Transducer: 0 to 5.0 in. W.C. (System 450 Sensor Type: **P 5**)
DPT2650-10D-AB	Low Pressure Differential Transducer: 0 to 10 in. W.C. (System 450 Sensor Type: **P 10**)

1. Refer to the *Setra Systems Model DPT265 Very Low Differential Pressure Transducer Catalog Page* on the Johnson Controls Product Literature website for more information.
2. The DPT265 sensors require 24 VAC input and must use the 0–5 VDC output. Refer to the *Setra Systems Model DPT265 Very Low Differential Pressure Transducer Catalog Page* on the Johnson Controls Product Literature web site for more information.
3. Used only with Communications Control Modules.

System 450™ Series Modular Controls (Continued)

System 450 Compatible P499 Series Transducers with 1/4 in. SAE 45 Flare Internal Thread with Depressor (Style 47) Ordering Information[1]

Product Code Number	Product Description
P499RCP-401C	-1 to 8 bar; order WHA-PKD3 type wire harness separately
P499RCP-402C	-1 to 15 bar; order WH A-PKD3 type wire harness separately
P499RCP-404C	0 to 30 bar; order WHA-PKD3 type wire harness separately
P499RCP-405C	0 to 50 bar; order WHA-PKD3 type wire harness separately
P499RCPS100C	-10 to 100 psis (sealed for wet and freeze/thaw applications); order WHA-PKD3 type wire harness separately
P499RCPS100K	-10 to 100 psis (sealed for wet and freeze/thaw applications); WHA-PKD3-200C wire harness included
P499RCPS102C	0 to 200 psis (sealed for wet and freeze/thaw applications); order WHA-PKD3 type wire harness separately
P499RCPS102K	0 to 200 psis (sealed for wet and freeze/thaw applications); WHA-PKD3-200C wire harness included
P499RCP-101C	0 to 100 psig; order WHA-PKD3 type wire harness separately
P499RCP-101K	0 to 100 psig; WHA-PKD3-200C wire harness included
P499RCP-105C	0 to 500 psig; order WHA-PKD3 type wire harness separately
P499RCP-105K	0 to 500 psig; WHA-PKD3-200C wire harness included
P499RCP-107C	0 to 750 psig; order WHA-PKD3 type wire harness separately
P499RCP-107K	0 to 750 psig; WHA-PKD3-200C wire harness included

1. The P499 sensors must be powered with the +5 VDC and C terminals and the output is 0.5 to 4.5 VDC. Refer to the *P499 Series Electronic Pressure Transducers Product/Technical Bulletin (LIT-12011190)* on the Johnson Controls Product Literature website for more information.

System 450 Compatible P499 Series Transducers with 1/8 in. 27 NPT External Thread (Style 49) Ordering Information[1]

Product Code Number	Product Description
P499RAPS100C	-10 to 100 psis (sealed for wet and freeze/thaw applications); order WHA-PKD3 type wire harness separately
P499RAPS100K	-10 to 100 psis (sealed for wet and freeze/thaw applications); WHA-PKD3-200C wire harness included
P499RAPS102C	0 to 200 psis (sealed for wet and freeze/thaw applications); order WHA-PKD3 type wire harness separately
P499RAPS102K	0 to 200 psis (sealed for wet and freeze/thaw applications); WHA-PKD3-200C wire harness included
P499RAP-101C	0 to 100 psig; order WHA-PKD3 type wire harness separately
P499RAP-101K	0 to 100 psig; WHA-PKD3-200C wire harness included
P499RAP-102C	0 to 200 psig; order WHA-PKD3 type wire harness separately
P499RAP-105C	0 to 500 psig; order WHA-PKD3 type wire harness separately
P499RAP-105K	0 to 500 psig; WHA-PKD3-200C wire harness included
P499RAP-107C	0 to 750 psig; order WHA-PKD3 type wire harness separately
P499RAP-107K	0 to 750 psig; WHA-PKD3-200C wire harness included

1. The P499 sensors must be powered with the +5 VDC and C terminals and the output is 0.5 to 4.5 VDC. Refer to the *P499 Series Electronic Pressure Transducers Product/Technical Bulletin (LIT-12011190)* on the Johnson Controls Product Literature website for more information.

WHA-PKD3 Wire Harnesses Ordering Information[1]

Product Code Number	Product Description
WHA-PKD3-200C	Plug and 3-Wire Harness for P499 Electronic Pressure Transducers: 2.0 m (6-1/2 ft) cable
WHA-PKD3-400C	Plug and 3-Wire Harness for P499 Electronic Pressure Transducers: 4.0 m (13 ft) cable
WHA-PKD3-600C	Plug and 3-Wire Harness for P499 Electronic Pressure Transducers: 6.0 m (19-5/8 ft) cable

1. Refer to the *P499 Series Electronic Pressure Transducers Product/Technical Bulletin (LIT-12011190)* on the Johnson Controls Product Literature website for more information.

PRESSURE CONTROLS
JOHNSON CONTROLS

P470

The P470 electronic pressure control with display is a single-stage, on/off, electronic pressure control with an SPDT output relay. The control may be field set to operate in one of three pressure ranges (0 to 100 psi, 0 to 500 psi, or 50 to 750 psi), as either an open-high or open-low control. The P470 control features a large LCD that displays the sensed pressure and other system-status indicators, as well as the adjustable setpoints in the programming mode. The P470 control has a lockable, 3-button touchpad for adjusting setpoints, and a front panel LED that indicates the output relay status. The P470 control uses a P399 electronic pressure transducer to generate a pressure signal and WHA-P399 wiring harness, which eliminates many of the constraints of capillary-tube control applications.



P470 Electronic Pressure Control with Display

Part #	Description	LIST
P470EB-1C	Electronic pressure control with display, 120 or 208/240 VAC, selectable ranges: 0 to 100, 0 to 500 or 50 to 750 psi	$410.00
P470FB-1C	Electronic pressure control with display, 24 VAC class 2 transformer, selectable ranges: 0 to 100, 0 to 500 or 50 to 750 psi	$397.00

P499 Electronic Pressure Transducers

Part #	Description	LIST
P499RCP-101C	P499 Series Electronic Pressure Transducer - Individual, 0 to 100 PSI Pressure Range, 0.5 to 4.5 VDC	$517.00
P499RCP-101K	P499 Series Electronic Pressure Transducer - Kit, 0 to 100 PSI Pressure Range, 0.5 to 4.5 VDC	$576.00
P499RCP-105C-JCS	P499 Series Electronic Pressure Transducer - Individual, 0 to 500 PSI Pressure Range, 0.5 to 4.5 VDC	$517.00
P499RCP-105K	P499 Series Electronic Pressure Transducer - Kit, 0 to 500 PSI Pressure Range, 0.5 to 4.5 VDC	$576.00

LINE VOLTAGE WALL THERMOSTATS

T26

For line voltage control of residential, commercial or industrial heating or year round air conditioning. Heat or cold anticipators not required. Liquid charged temperature sensing element and highly efficient diaphragm and leverage provides close temperature control.

Features:

- Attractive, beige coloured, high impact plastic enclosure
- Close differential without the need for anticipators
- Bi-metal thermometer supplied as standard except where indicated
- Equipped with adjustable dial stops



Specifications:

Temperature range is 40°F to 90°F (5°C to 30°C), except energy conservation models

Part #	Type of Adjustment	Application	Selector Switch	Differential Approx. °F(°C) Heating		LIST
				Heating	Cooling	
HEATING						
T26A-14 (no therm.)	Knob	SPST, energy conservation heating model, max setting 75°F (24°C)	None	2 (1.1)	-	-
HEATING AND COOLING						
T26S-18[2]	Knob	SPDT	None	1-3/4 (1)	2-1/4 (1.3)	$434.00
T26T-3[2]	Knob	SPDT, heavy duty	None	3 (1.7)	3-4 (1.7-2.2)	$687.00

JOHNSON CONTROLS

Pressure Controls - Compatible with R-410A

P70 SERIES



P170 SERIES



P100 SERIES



P266 SERIES



	PRODUCT	SWITCH ACTION	BOTTOM OF RANGE	TOP OF RANGE	MAXIMUM WORKING PRESSURE	TYPICAL APPLICATIONS	LIST
P70 SERIES ADJUSTABLE ON/OFF PRESSURE CONTROLS	P70AA-2C†	SPST Open Low	0	150	325	Suction pressure control — loss of charge	-
	P70AA-400C†	SPST Open Low	100	470	690	Fan cycling for head pressure control	-
	P70CA-400C†	SPST Open High	200	610	690	High pressure compressor shutdown — Auto Reset	$471.00
	P70DA-400C†	SPST Open High	200	610	690	High pressure compressor shutdown — Manual Reset	$471.00
P170 SERIES ADJUSTABLE ON/OFF PRESSURE CONTROLS	P170AA-2C†	SPST Open Low	0	150	325	Suction pressure control — loss of charge	$420.00
	P170AA-400C†	SPST Open Low	100	470	690	Fan cycling for head pressure control	$393.00
	P170CA-400C†	SPST Open High	200	610	690	High pressure compressor shutdown — Auto Reset	$428.00
	P170DA-400C†	SPST Open High	200	610	690	High pressure compressor shutdown — Manual Reset	$455.00
P100 SERIES NON-ADJUSTABLE ON/OFF PRESSURE SWITCHES	P100AP-332C†	SPST Open Low	300	400	600	Fan cycling for head pressure control	$117.90
	P100AP-201C†	SPST Open Low	10	32	600	Low pressure switch — loss of charge Compressor cycling Auto Reset	$111.70
	P100DA-81C/D[1]†	SPST Open High	Manual Reset	630	800	High pressure compressor shutdown - Manual Reset	$169.60
	P100DA-86D[3]†	SPST Open High	Manual Reset	575	800	High pressure compressor shutdown — Manual Reset	$153.10
	P100CP-85D[2]†	SPST Open High	565	665	800	High pressure compressor shutdown — Auto Reset	$128.20
	P100CE-11D[1]	SPST Open High HD Contacts	450	550	800	High pressure compressor shutdown — Auto Reset	-
P266 SERIES ADJUSTABLE MODULATING ELECTRONIC FAN SPEED CONTROLS	P266Axx[3]†	Modulating	30	720	765	Head pressure control 208/230/240 V	$1,766.00
	P266Bxx[3]†	Modulating	30	720	765	Head pressure control 460/480/575 V	$1,253.00

1. Bulk Pack Only. 50 per box. Minimum order 250.
2. Bulk Pack Only. 50 per box. Minimum order 100.
3. R-410A compatibility offered with P266SNR-2C transducer
† In Stock.

JOHNSON/RANCO/ HONEYWELL 565-666

JOHNSON CONTROLS

Pressure Controls - Compatible with R-410A

Product	Action	Size & Connection	Bottom of Range PSI	Top of Range PSI	Maximum Working Pressure PSI	LIST
V246 Series 2-Way Pressure-Actuated Water-Regulating Valves						
V246GA1-001C†	Direct Acting	3/8 in. NPT Screw	200	400	630	$850.00
V246GB1-001C†		½ in. NPT Screw				$924.00
V246GC1-001C†		¾ in. NPT Screw				$1,057.00
V246GD1-001C†		1 in. NPT Screw				$1,710.00
V246GE1-001C†		1-1/4 in. NPT Screw				$1,993.00
V246GM1-001C		1-1/4 in. Union Sweat				
V246GR1-001C†		1-1/2 in. Flange				$2,465.00
V246HA1-001C*		3/8 in. NPT Screw				
V246HB1-001C*†		½ in. NPT Screw				
V246HC1-001C*		¾ in. NPT Screw				
V246HD1-001C*		1 in. NPT Screw				
V246HE1-001C*		1-1/4 in. NPT Screw				
V246HR1-001C*		1-1/2 in. ASME Flange				
V246KA1-001C**		3/8 in. NPT Screw				
V248 Series 3-Way Pressure-Actuated Water-Regulating Valves						
V248GB1-001C	Direct Acting	½ in. NPT Screw	200	400	630	
V248GC1-001C†		¾ in. NPT Screw				$1,657.00
V248GD1-001C		1 in. NPT Screw				
V248GE1-001C		1-1/4 in. NPT Screw				
V248GK1-001C		¾ in. Union Sweat				
V248GL1-001C		1 in. Union Sweat				
V248GM1-001C		1-1/4 in. Union Sweat				
V146 Series 2-Way Pressure-Actuated Water-Regulating Valves (for system water pressure up to 350 psi)						
V146GK1-001C	Direct Acting	3/4 in. Union	200	400	630	
V146GL1-001C		1 in. Union				
V148 Series 3-Way Pressure-Actuated Water-Regulating Valves (for system water pressure up to 350 psi)						
V148GK1-001C	Direct Acting	3/4 in. Union	200	400	630	
V148GL1-001C		1 in. Union				

* Maritime models for use with corrosive media.
** Low-flow model.
† In Stock.

WATER REGULATING VALVES
JOHNSON CONTROLS

V46 Pressure Actuated Water Regulating Valves

The V46 is a pressure actuated modulating valve that is suitable for use either on closed or open systems. Direct acting valves open on pressure increase. This type of valve is primarily used to regulate the flow of water or glycol to a water cooled condenser on a refrigeration system. Reverse acting valves open on pressure decrease and are generally used for bypass or heat pump application.

Features:

- no close fitting or sliding parts in water passages
- range spring does not come in contact with cooling water
- easy manual flushing, if required
- valve design minimizes chatter or water hammer
- free movement of all parts provide smooth pressure modulation
- refrigerant adjustment is not affected by water pressure
- withstands high hydraulic shock without damage
- 3/8, 1/2 and 3/4 in. valves may be disassembled and reassembled without detaching from the refrigeration system or without pumping down



V46AB-1



V46AT-1

Part #	Pipe Size (in.)	Inlet and Outlet	Opening Point Range - psig (kPa)	Pressure Element Style	Seat Repair Kit	LIST
COMMERCIAL TYPE - NON CORROSIVE REFRIGERANTS						
V46AA-1	3/8 NPT	Threaded	70 to 260 (483 to 1793)	30 in Capillary 1/4 in. Flare Nut (45)	STT14A-600R	$620.00
V46AB-1	1/2 NPT				STT15A-602R	$674.00
V46AC-1	3/4 NPT				STT16A-601R	$813.00
V46AD-1	1 NPT				STT17A-609R	$1,710.00
V46AE-1	1-1/4 NPT				STT17A-610R	$1,995.00
V46AR-1	1-1/2	4 Hole ASME Flange				$2,467.00
V46AS-1	2		70 to 170 (483 to 1172)	1/4 in. Male Flare Fitting (S)	STT18A-600R	$3,584.00
V46AS-2	2		160 to 260 (1103 to 1793)			$3,366.00
V46AT-1	2-1/2		70 to 170 (483 to 1172)		STT18A-601R	$4,911.00
V46AT-2	2-1/2		160 to 260 (1103 to 1793)			$4,911.00
COMMERCIAL TYPE - AMMONIA						
V46AC-8	3/4 NPT	Threaded	100 to 200 (690 to 1379)	1/4 in. Female NPT (15)	STT16A-601R	-
V46AD-4C	1 NPT				STT17A-609R	-
V46AR-2	1-1/2	4 Hole ASME Flange			STT17A-610R	$2,686.00
V46AS-3	2				STT18A-600R	-
V46AT-3	2-1/2				STT18A-601R	-
MARITIME TYPE - NON CORROSIVE REFRIGERANTS						
V46BA-2	3/8 NPT	Threaded	70 to 260 (483 to 1793)	30 in. Capillary with Sweat Connection (34)	STT14A-601R	-
V46BB-2	1/2 NPT				STT15A-603R	$1,288.00
V46BC-2	3/4 NPT				STT17A-613R	$1,751.00
V46BD-2	1 NPT				STT17A-611R	$2,880.00
V46BE-2	1-1/4 NPT				STT17A-612R	$3,588.00
V46BS-4C	2	4 Hole ASME Flange	160 to 260 (1103 to 1793)		STT18A-602R	-
V46BT-4	2-1/2					$10,130.00

WATER REGULATING VALVES
JOHNSON CONTROLS



V47 Temperature Actuated Modulating Valve

The V47 is a temperature actuated modulating valve that regulates the flow of water or glycol to maintain a desired temperature. Three temperature ranges for each valve size are available. Many valves come with a removable bypass plug that can be replaced by the bypass orifice provided separately with each valve. Valve action is open on temperature increase. For open on temperature decrease models, contact Application Engineering.

Features:
- no close fitting sliding parts in water passages
- range spring does not come in contact with the cooling water
- easy manual flushing, if required
- valve design minimizes chatter and water hammer

Part #	Pipe Size In.	Range (Opening Point) °F	Bulb Size In.	Std Bypass Orifice Dia. In.	Seat Repair Kit	LIST
V47AA-1	3/8	115 to 180	11/16 x 3-1/4	.062	STT14A-600R	$1,649.00
V47AA-2	3/8	160 to 230	11/16 x 3-1/4	.062	STT14A-600R	$1,792.00
V47AA-3	3/8	75 to 135 Cross Ambient	11/16 x 6	.062	STT14A-600R	$1,683.00
V47AB-3	1/2	115 to 180	11/16 x 3-1/4	.062	STT15A-602R	$1,756.00
V47AB-4	1/2	160 to 230	11/16 x 3-1/4	.062	STT15A-602R	-
V47AB-5	1/2	75 to 135 Cross Ambient	11/16 x 10	.062	STT15A-602R	$1,790.00
V47AC-3	3/4	115 to 180	11/16 x 3-1/4	.062	STT16A-601R	$1,881.00
V47AC-4	3/4	160 to 230	11/16 x 3-1/4	.062	STT16A-601R	$1,881.00
V47AC-6	3/4	75 to 135 Cross Ambient	11/16 x 10	.062	STT16A-601R	$1,913.00
V47AD-1	1	75 to 135 Cross Ambient	11/16 x 16-1/4	.093	STT17A-609R	$2,923.00
V47AD-2	1	115 to 180	11/16 x 6	.093	STT17A-609R	$2,834.00
V47AD-3	1	160 to 230	11/16 x 6	.093	STT17A-609R	$2,834.00
V47AE-2C	1-1/4	115 to 180	11/16 x 16-1/4	.093	STT17A-609R	$3,055.00
V47AR-1	1-1/2	75 to 135 Cross Ambient	11/16 x 16-1/4	.093	STT17A-610R	$3,654.00
V47AR-2	1-1/2	115 to 180	11/16 x 6	.093	STT17A-610R	$3,566.00
V47AS-2	2	160 to 205	11/16 x 10	.125	STT18A-600R	-
V47AT-3	2-1/2	75 to 115 Cross Ambient	11/16 x 43	.125	STT18A-601R	$6,355.00

Specifications:

Maximum Bulb Temperature: 20°F (-6.7°C) above temperature range
Maximum Water Temperature: 170°F (77°C)
Maximum Supply Water Pressure: 150 psig (1034 kPa)
Capillary Length: 6 ft. (1.83m) Nylon Armor
Temperature Bulb Style 4: (1/2 in. NPT closed tank immersion)

Note: V47AB-2 Temperature Bulb Style 1; V47AC-8 Capillary Length 4 ft.

REGULATING VALVES

JOHNSON CONTROLS

V48 Series Three-Way Water Regulating Valves

Series V48 are designed specifically for condensing units cooled either by atmosphere or forced draft cooling towers. They are used on single or multiple condenser hook-ups to the tower to provide the most economical and efficient use of the tower. Water supply pressure to 150 psig (1034 kPa). Threaded inlet and outlet ports.

Part #	Pipe Size NPT	Range Opening Point of Normally Closed Side psig (kPa)	Pressure Element Style	Shipping Wt. (lbs)	Seal Repair Kit	Replacement Power Element	LIST
V48AB-1	1/2"	85 to 110 (586 - 758)	13	5.0	STT15A-605R	SEP91A-602R & SEC37A-602R*	-
V48AB-2	1/2"	145 to 190 (1000-1310)	13	5.0	STT15A-605R	SEP91A-602R & SEC37A-602R*	$1,356.00
V48AC-1	3/4"	85 to 110 (586 - 758)	13	6.5	STT16A-604R	SEP91A-601R & SEC37A-602R*	
V48AC-2	3/4"	145 to 190 (1000-1310)	13	6.5	STT16A-604R	SEP91A-601R & SEC37A-602R*	$1,470.00
V48AD-1	1"	85 to 110 (586 - 758)	13	12.0	STT17A-616R	SEP91A-603R & SEC37A-600R*	-
V48AD-2	1"	145 to 190 (1000-1310)	13	12.0	STT17A-616R	SEP91A-603R & SEC37A-600R*	$2,863.00
V48AE-1	1-1/4"	85 to 110 (586 - 758)	13	16.0	STT17A-617R	SEP91A-603R & SEC37A-600R*	-
V48AE-2	1-1/4"	145 to 190 (1000-1310)	13	16.0	STT17A-617R	SEP91A-603R & SEC37A-600R*	$2,937.00
V48AF-1	1-1/2"	85 to 110 (586 - 758)	5	25.0	STT17A-604R	SEP81A-602R	-
V48AF-2	1-1/2"	145 to 190 (1000-1310)	5	25.0	STT17A-604R	SEP81A-601R	$4,479.00

Maximum permissible bellows pressure for R-12 is 230 psig (1586 kPa) and for R-22 is 320 psig (2206 kPa)
* Replacement element provided with 1/4" male SAE connector. Order SEC37A capillary kit with 2 flare nuts separately if needed. Use only on valves specified.



ELECTRONIC TEMPERATURE CONTROLS
DIXELL

Universal-XR Replacement Controller

The Universal-XR controller offers a 7 in 1 solution for Heating/Medium & Low Temperature/Defrost/ Fans /Alarms etc. in just one control. Select one of the six preset maps in the application menu, and you now have a replacement of virtually any control. It's the one control that is a must have on your service vehicle. Ultra simplified one does it all. The Universal-XR Advanced Map (tC=7) allows total flexibility with inputs and outputs. Comes complete with probes.



Replaces:

XR110C, XR10C, XR10CX, XR01CX, XR120C, XR20C, XR20CX, XR02CX, XR130C, XR30C, XR30CX, XR03CX, XR140C, XR40C, XR40CX, XR04CX, XR160C, XR60C, XR60CX, XR06CX

*And most other brands of 32x74 mm Electronic Controls

Part #	Description	LIST
XR60CX-4N1F1-UR	120 Volts	$593.00
XR60CX-5N1F1-UR	240 Volts	$593.00

Thermometer & Light Switch For Walk-ins

Now you can combine your Light Switch and Digital Thermometer in one easy to install package.The waterproof "elbow" engaged illuminated light switch allows operators to turn on the walk-in light easily, even when their hands are full. The industrial duty lightswitch is rated at 15A and includes optional gasket for outdoor use.

- ED Temp Display
- Light switch
- 120V Direct Power



Part #	Description	LIST
24DT-L4F1-ALL	Thermometer w/ Switchplate and Lighted Switch, 110Vac. °F -40/230°F	$372.00

ELECTRONIC TEMPERATURE CONTROLS

FULL GAUGE



CONV32



EASYPROG programming key



Complete Temperature, Defrost, Pressure, Humidity & Voltage Controls
Optional "SITRAD" Computer/Internet Communication Available

Part #	Description	LIST
MT514E	Universal Clg & Htg Contolerl 115/230 V - 2 relay, Defrost & Alarm	$261.20
MT514EL	Universal Clg & Htg Contolerl 12/24 V AC/DC - 2 relay, Defrost & Alarm	$243.50
MT-512E-2HP	Thermostat C/H 1 Stage 1 Sensor, Air Defrost, 1 rel, UL 115/230 volt AC	$190.70
MT-512EL-2HP	Thermostat C/H 1 Stage 1 Sensor, Air Defrost, 1 rel, UL 12/24 volt AC/DC	$190.70
MT512RIPLUS	MT-512Ri(L) "plus" model for "SITRAD" Local & Remote communication - specify voltage	-
MT512-RIL-LOG	MT-512Ri(L) "Log" model available with SITRAD communication & Internal Memory Chip For Logging	-
TC940RI-ECO	Controller with demand defrost, ALARM, Ref, Defrost, UL 115/230 volt AC	$318.00
TC940RIL-ECO	Controller with demand defrost, ALARM, Ref, Defrost, UL 12/24 volt AC/DC	$318.00
TC900E-POWER	TC900E Power Ref. Control, Therm & Defrost Terminate - High Amperage 115/230 volt	$318.00
TC900EL-POWER	TC900EL Power Ref. Control, Therm & Defrost Terminate - High Amperage 12/24 volt AC/DC	$318.00
TC-910RI(L)	Four Outputs Dual Stage W/Defrost Control & Hour Meters 12/24 V&115/230 V.	-
TC-920RI(L)	Three Outputs W/Defrost, Energy Mgmt, & Digital Input Door Switch 12/24 V&115/230 V.	-
TC-518RI(L)	DUAL STAGE Cooling and/or Heating 12/24 V or 115/230 V	-
BC-01	Junction Box to series wire multiple SITRAD (monitored) controllers	$30.40
	Thermostats With Internet Communication	
TC900E-LOG	TC 900E Log - Refrigeration control Therm, Defrost, & SITRAD Com. UL 120/220 volt A/C	-
TC900EL-LOG	TC 900EL Log - Refrigeration control Therm, Defrost, & SITRAD Com. UL 12/24 volt A/C	-
MT543RI(L)-PLUS	MT-543Ri(L)Plus Three Stage & Two Ranges -50C to 105C or -99C to 300C with PT-100 Sensor (Extra)	$397.00
	Pressure controls	
PCT100RI	Pressure controller with sensor, CFC, HCFC & HFC 120/220 volt a/c	$532.00
PCT100RIL	Pressure controller with sensor, CFC, HCFC & HFC 12/24 volt AC/DC	$556.00
	*Ammonia application requires SB49 Stainless Steel pressure sensor- ADD	
	Pressure controls With SITRAD Internet Communication	
PCT410EPLUS	PCT 410E plus Pressure Control c/w NSK sensor) & 12 vdc transformer	-
	115/230 volt, 12 VDC 4 outputs, ALARM (CFC,HCFC, HFC) *Ammonia application requires S.S. SB49 pressure sensor - ADD	
	Precise Humidity Control with SITRAD communication	
AHC80-PLUS	c/w two sensors D/B & W/B with reservoir, 115/230 volt dual stage	$2,029.00
MT530E-L-SUPER	Humid & Temp control with SITRAD, 3 outputs, buzzer alarm (spec voltage)	$678.00
	Internet Interfaces Temperature & Pressure Controls	
CONV32	Interface U/L, cU/L (Up to*32 zones)	$388.00
	*Stand Alone, USB Connection, can control up to 32 Full Gauge controls	
	Thermometers	
TC17RGTLI(L)*	Therm Digital Read Out i = 120/220 volt A/C *L = 12/24 volt with control contacts	-
TI33RILPLUS	Thermometer Digital Up To 3 Read Outs i = 120/220 volt A/C *L = 12/24 volt no control	$394.00
	**TPM 2000 - Thermometer C or F display, 24 Volt A/C D/C Replaces EPTM-902 A/C Max Product*	
	Solar Heating Controls	
ANASOL	Economy Pumped Solar Heating Control, 16 Amp, Freeze Protection, Automatic or manual control	-
MICROSOL-II-PLUS	Full Feature solar Control, 3 Sensors & Outputs, Temp. Protection, 3 outputs & SITRAD	$463.00
	Voltage Monitoring	
MT516RVTPLUS	Temperature Control & Voltage Monitoring, 115/230 Volt 2 Outputs, SITRAD communication	-
PHASELOGPLUS	Full Feature solar Control, 3 Sensors & Outputs, Temp. Protection, 3 outputs & SITRAD	$533.00
	Wireless Communication Converters for Full Gauge "SITRAD" controllers	
FG-WI-CONVERTER	Transmitter or Receiver That Converts Data To Radiofrequency	-
FG-WI-ROUTER	Device Increases Transmission Reach of FG-WI Wireless Converters	-
	Fully Proportional Controller with "SITRAD"	
AUTO-PID+	Fully Proportional Controller Cooling & Heating with sensor 90 - 264 V A/C	$520.00
	Enclosure Box For Easy Wall Mounting of Full Gauge Controllers	
GB-01S	Wall Mount Enclosure c/w Pre Machined Slot & Separate Face Plate (Supplied Without Toggle Switches)	$86.80
SB41	Sensor Black Cable 10K @ 25C NTC Thermistor Water Proof -Grey Cable optional	$43.10
EASYPROG	Programing Key for Multiple Controller Set Up & Programing	

Nomenclature

R - Rectangular
C - Circular
I - New Design (only Ri – 120/240V)
L - Low Voltage (12/24V)
B - Blue Display
Clock - Real Time
Plus - Sitrad (Internet Communication)
Log - Internal Memory Chip & Sitrad Communication
H- High Humidity Enclosure
E = Evolution Series Controller

Example:
MT512Ri Plus : Temperature Controller, rectangular, 120/240V, Sitrad-internet (12/24V also available)

ELECTRONIC CONDENSER FAN SPEED CON-

SAGINOMIYA, JAPAN

For Use With Variable Speed Electric Motors
Penn-Johnson to Saginomiya Cross Reference

Penn-Johnson Model #	Saginomiya RGE Model #	Adjustable Operating Range - PSIG	Single Pressure Unit	Start Voltage % of Line Voltage	Capillary Length	Electrical Spec.	LIST
P66AAB-1	**RGE-Z1Q4-7L**	116/406	Yes	35%	60”	Single Phase 200/240 V. A/C 0.2 to 8 Amp	-
P66AAB-4	**RGE-Z1Q4-7L**	116/406	Yes	35%	60”		
P66AAB-6	**RGE-Z1Q4-7L**	116/406	Yes	35%	60”		
P66AAB-9	**RGE-Z1Q4-7L**	116/406	Yes	35%	60”		
P66AAB-10*	**RGE-Z1Q4-7L**	116/406	Yes	35%	60”		
P66AAB-25	**RGE-Z1Q4-7L**	116/406	Yes	35%	60”		
R-410A MODELS							
T.B.A	**RGE-Z1Q6-7L**	230/565	Yes	35%	60”	Same as above	$669.00
* P66AAB-10 available with 120” capillary length							

Saginomiya Features:

1. Additional Saginomiya RGE Models Available For **Single and Three** Phase Applications
2. All RGE Models **CSA** Approved
3. All models With **Full Off or Minimum Speed Option** switch
4. Enhanced Noise Resistance Design
5. Can Control **Multiple Fans** Where Sum of Fan Amp Ratings is Less Than Amps Rating of Drive
6. Durable & High Impact Plastic Cover
7. Dual 50/60 Hertz Application
8. **Direct To Line Wiring** - No Transformer Required



RGE Single Phase Type



RGE Three Phase Type

XGE Compact Design



XGE Direct Mount
“Mini” Electronic Condenser Fan Speed Control

Model	Refrigerants	Adjustment Range PSI		Fan Motor Function	Fluid Temp Fahrenheit	Electric Specs	LIST
		Min	Max				
XGE-4CC-7	**R22,407C,404A**	145	365	Full cut off type	-4 to 158	230 V Single Phase 3 Amp	$411.00
XGE-4MC-7	**R22,407C,404A**	145	365	Min.speed type	-4 to 158		$380.00
XGE-6CC-7	**R-410A**	320	565	Full cut off type	-4 to 158		$411.00
XGE-6MC-7	**R-410A**	320	565	Min.speed type	-4 to 158		$380.00
XGE-AE01	**Optional bracket for panel mounting available**						$26.60

SMALL PRESSURE CONTROLS
SAGINOMIYA, JAPAN

LWS/RWS Temperature Controls

— Remote bulb sensing (LWS)
— Direct sensing (RWS)

Features

- Narrow (fixed and adjustable) temperature differential from 4 to 14ºF (LWS & RWS)
- UL and cUL Recognized
- Wide temperature ranges available from –30 to +320ºF
- Durable SPDT switch rated 8/16A at 250/120 VAC
- Different capillary length (6 ft is standard), available up to 16 ft. (LWS)
- Units come with knob assembly and concealed plate (WS series)
- Durable PVC cover to eliminate corrosion

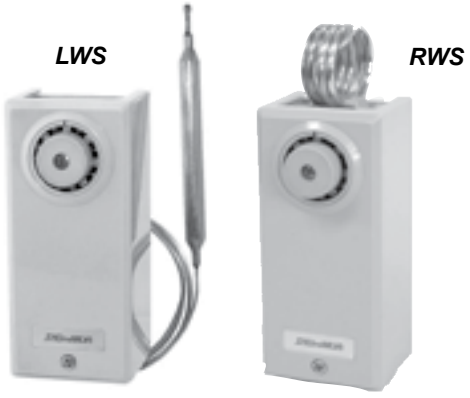

Part #	Description	LIST
LWS-C1030Q13	SPDT -30/100	**$180.60**
RWS-C1030Q01	SPDT -30/100	**$190.70**

AWR / VWR Control Valves

- Fresh water and Glycol system applications
- Available 3/8”, 1/2”, 3/4”, 1” and 1 ¼” with NPT thread
- All valves are with bronze casting bodies
- Valves are supplied with ¼” flare connection and 4 ft. capillary tube (supplied loose)
- Available for R22 and R407 refrigerant



Part #	Description	LIST
AWR1203Q71	3/8”	**$344.00**
AWR1504Q71	1/2”	**$354.00**
AWR2006Q71	3/4”	**$384.00**
AWR2510Q71	1”	**$445.00**
AWR3212Q71	1-1/4”	**-**
VWR-1203GLWQ1-ECO	3/8" – ***R410A***	**$476.00**
VWR-1504GLWQ1-ECO	1/2" – ***R410A***	**$550.00**
VWR-2006GLWQ1-ECO	3/4" – ***R410A***	**$627.00**

ACB Pressure Switches

- Economical, compact, for direct mounting
- Low pressure, fan cycling and high pressure up to 680PSI
- SPST & SPDT configuration
- Automatic & manual reset types
- Single, dual and triple pressure control
- 100,000 life cycle at rated load
- Refrigerant, water and air applications
- Burst pressure 5000 PSI
- UL, cUL & CSA



See the next page for part number and pricing

SMALL PRESSURE CONTROLS

SAGINOMIYA, JAPAN

ACB Pressure Switches

Item No.	CATALOGUE NO.	Setting		Max. Pressure	Connection	Application	Contact Type	LIST
		Cut out (Off)	Cut in (On)					
1	ACB-2UA101	10±5	30±5	213	1/4" Flare	LP Cut out	NO	
2	ACB-2UA143	25±7	50±7	213	1/4" Flare	LP Cut out	NO	$45.40
3	ACB-2UA94	30±5	60±5	213	1/4" Flare	LP Cut out	NO	-
4	ACB-2UA17	35±5	55±5	213	1/4" Flare	LP Cut out	NO	$45.40
5	ACB-2UB36	55±5	35±5	213	1/4" Flare	LP Cut out	NC	$45.40
6	ACB-2UB134	60±7	90±7	213	1/4" Flare	LP Cut out	NC	
7	ACB-2UB183	50±8	26±8	214	1/4" Flare	LP Cut out	NC	
8	ACB-2UA141	130±11.5	174±11.5	215	1/4" Flare	LP Cut out	NO	
9	ACB-2UA142	185±21.5	230±14.5	215	1/4" Flare	LP Cut out	NO	
10	ACB-2UA18	300±15	400±10	500	1/4" Flare	HP Cut out	NO	
11								
12	ACB-2UB191	375±14	275±21	500	1/4" Flare(Red Dot)	HP Cut out	NO	
13	ACB-2UB35	400±10	300±15	500	1/4" Flare	HP Cut out	NC	
14								
15	ACB-2UB192	600±14	450±28	650	1/4" Flare(Red Dot)	HP Cut out	NC	$41.20
16	ACB-2UA135	25±7	50±7	213	Solder	LP Cut out	NO	
17	ACB-2UB180	550±15	420±20	650	Solder	HP Cut out	NC	
18	ACB-2UA318W	5±4	20±5	213	1/4" Flare	LP Cut out	NO	$45.40
19	ACB-2UA97W	10±5	25±5	213	1/4" Flare	LP Cut out	NO	$45.40
20	ACB-2UA626W	15±5	35±5	213	1/4" Flare	LP Cut out	NO	$45.40
21	ACB-2UA40W	20±5	45±5	213	1/4" Flare	LP Cut out	NO	$45.40
22	ACB-2UA303W	25±5	50±5	213	1/4" Flare	LP Cut out	NO	
23	ACB-2UA47W	25±7	65±7	213	1/4" Flare	LP Cut out	NO	$45.40
24	ACB-2UA39W	29±7	44±7	213	1/4" Flare	LP Cut out	NO	-
25	ACB-2UA227W	35±5	55±5	213	1/4" Flare	LP Cut out	NO	$45.40
26	ACB-2UA375W	40±5	65±5	213	1/4" Flare	LP Cut out	NO	-
27	ACB-2UA354W	40±5	80±7	213	1/4" Flare	LP Cut out	NO	-
28	ACB-2UA286W	55±5	75±7	213	1/4" Flare	LP Cut out	NO	-
29								
30	ACB-2UB46W	60±5	45±5	213	1/4" Flare	LP Cut out	NC	$45.40
31	ACB-2UB37W	65±7	40±7	213	1/4" Flare	LP Cut out	NC	$45.40
32	ACB-2UA441W	75±10	105±10	500	1/4" Flare	LP Cut out	NO	$45.40
33	ACB-2UA630W	120±15	170±10	500	1/4" Flare	fan cycling	NO	$45.40
34	ACB-2UA685W	150±14	225±15	500	1/4" Flare	fan cycling	NO	$45.40
35	ACB-2UA417W	150±15	250±15	500	1/4" Flare	fan cycling	NO	$45.40
36	ACB-2UA38W	160±21	203±15	500	1/4" Flare	fan cycling	NO	$39.80
37	ACB-2UA48W	170±15	215±15	500	1/4" Flare	fan cycling	NO	$45.40
38	ACB-2UA631W	170±15	250±10	500	1/4" Flare	fan cycling	NO	$45.40
39	ACB-2UA49W	190±15	265±15	500	1/4" Flare	fan cycling	NO	$45.40
40	ACB-2UA319W	210±15	275±12	500	1/4" Flare	fan cycling	NO	$45.40
41	ACB-2UA50W	250±15	305±15	500	1/4" Flare	fan cycling	NO	$45.40
42	ACB-2UA627W	300±20	400±15	500	1/4" Flare	fan cycling	NO	$45.40
43	ACB-2UB724W	275±15	175±20	500	1/4" Flare	HP Cut out	NC	$45.40
44	ACB-2UB723W	300±15	200±20	500	1/4" Flare	HP Cut out	NC	
45	ACB-2UB38W	350±10	250±10	500	1/4" Flare	HP Cut out	NC	
46	ACB-2UB489W	325±10	225±15	500	1/4" Flare	HP Cut out	NC	
47	ACB-2UB36W	355±15	284±21	500	1/4" Flare	HP Cut out	NC	
48	ACB-2UB430W	375±10	275±15	500	1/4" Flare	HP Cut out	NC	
49	ACB-2UB237W	360±10	245±10	500	1/4" Flare	HP Cut out	NC	
50	ACB-2UB393W	400±10	300±10	500	1/4" Flare	HP Cut out	NC	
51	ACB-2UB282W	425±10	325±20	500	1/4" Flare	HP Cut out	NC	$45.40
52	ACB-2UB488W	470±10	350±20	600	1/4" Flare	HP Cut out	NC	$45.40
53	ACB-2UB428W	550±15	420±20	650	1/4" Flare	HP Cut out	NC	
54	ACB-2UB717W	565±15	400±20	650	1/4" Flare	HP Cut out	NC	
55	ACB-2UB754W	600±14	450±28	650	1/4" Flare	HP Cut out	NC	$45.40
56	ACB-2UB148MW	350±15	(260)	500	1/4" Flare	HP Manual	NC	$72.00
57	ACB-2UB107MW	375±15	(270)	500	1/4" Flare	HP Manual	NC	$72.00
58	ACB-2UB367MW	410±15	(310)	500	1/4" Flare	Hp Manual	NC	-
59	ACB-2UB487MW	475±15	(360)	500	1/4" Flare	Hp Manual	NC	-
60	ACB-2UB629MW	610±15	(480)	650	1/4" Flare	Hp Manual	NC	
61	ACB-2UA284W	2±5	18±5	213	solder	LP Cut out	NO	
62	ACB-2UA100W	7±4	22±5	213	solder	LP Cut out	NO	$45.40
63	ACB-2UA436W	25±5	50±6	213	solder	LP Cut out	NO	
64	ACB-2UA307W	225±10	325±10	500	solder	fan cycling	NO	
65	ACB-2UB280W	250±10	150±10	213	solder	HP Cut out	NC	
66	ACB-2UB281W	350±10	250±15	213	solder	HP Cut out	NC	
67	ACB-2UB683W	425±10	325±10	500	solder	HP Cut out	NC	
68	ACB-2UB697W	550±15	420±20	500	solder	HP Cut out	NC	
69	ACB-2UB109MW	360±15	(270)	500	Capillary Manual	HP Manual	NC	

Contact type: NC = Normally Closed NO =Normally Open

NOTE: Non-Priced Models are Special Orders

INTERMITTENT PILOT IGNITION CONTROL

BASO

L62GB-3C Baso Automatic Pilot Switch



Specifications:

- 100% shutoff
- Maximum Amb. Temperature: 175°F
- Manual Reset
- Switch Action: SPST

Part #	LIST
L62GB-3C	$550.00



H91 Series



Safety Shutoff Device



BG1600M00EK-1AA

Baso Intermittent Pilot Ignition Control

Part #	Description	LIST
H91WG-1-BAS	Auto Gas Valve 42,000 Btu Sub 025-22287-000 York 1/4" 24v. 1/2# Max.	$456.00
L62GB-3C-BAS	Saftey Pilot Switch 100% Shut Off	$550.00
Q90CC-1C-BAS	Electrode, Pilot Burner & Sensor Kit For REZNOR Unit Heaters	$338.00
Q90DD-1C-BAS	Electrode, Pilot Burner & Sensor Kit For REZNOR Roof Top Unit	$344.00
J991LYW-7225-BAS	Pilot Burner Assembly	$401.00
Y70AA-1C-BAS	Gas Valve Grease 2.5 Oz.	$95.10
Y75AS-2H-BAS	Replacement Flame Sensor	$143.30
Y75BS-1H-BAS	Replacement Flame Sensor	$147.60
Y99AR-1H-BAS	1/4"x 60" Aluminum Gas Pilot Tubing C/w 4 Nuts	$75.30
RAA160A-601D-BAS	1/4" Spay To RAJAH Adapter. Same As 4074EPM From Honeywell	
C161FJD-1-BAS	Baso Direct Spark Ignition Control | 24VAC	$585.00
C161KKD-1-BAS	Baso Direct Spark Ignition Control with 30 Seconds Pre-Purge | 24VAC	$585.00
C661AHA-1C-BAS	Baso Intermittent Pilot Ignition Control with Rollout Switch	$585.00
C610U-1C-BAS	Baso Universal Intermittent Pilot Ignition Control | 24VAC	$612.00

ETC ELECTRONIC TEMPERATURE CONTROLS

RANCO

ETC offers the accuracy and reliability of an electronic control at an affordable price.

Features:

- Wide temperature range (-30°F to 220°F)
- Adjustable differential range (1°F to 30°F)
- LCD Digital Display of :
  - Sensor Temperature
  - Control Settings
  - Relay Status
  - Onboard Diagnostics
- Simple Key Pad settings
- Remote temperature sensing - up to 400 feet
- Selectable Heat and Cool Modes
- Selectable Fahrenheit and Celsius Modes
- Output relay rated at one horsepower
- Lockout switch to prevent tampering
- Operates on 120/240 VAC (24 VAC models available)
- One and Two Stage models available
- Optional 0 and 10 Volt Analog Output
- Sensor included with control
- Settings retained in the event of a power failure



Part Number	Type	Input Voltage AC	No. of Stages	0-10 V Output	LIST
ETC-1110	NEMA 1	120/240	1	NO	$328.00
ETC-1111	NEMA 1	120/240	1	YES	$471.00
ETC-2110	NEMA 1	120/240	2	NO	$444.00
ETC-2111	NEMA 1	120/240	2	YES	$434.00
ETC-1120	NEMA 1	24	1	NO	$374.00
ETC-1121	NEMA 1	24	1	YES	$451.00
ETC-2120	NEMA 1	24	2	NO	$374.00
ETC-2121	NEMA 1	24	2	YES	$451.00
ETC-1410	NEMA 4X	120/208/240	1	NO	$455.00
ETC-2410	NEMA 4X	120/208/240	2	NO	$471.00

PRESSURE CONTROLS

RANCO



Single Function Controls

These controls offer a variety of pressure ranges and switch actions to provide maximum application flexibility.

Features:

- NEMA 1 enclosure with non-conductive cover
- Front-located captive cover screw
- Super Cap capillary protection system
- Universal mounting and compact design
- Laser-welded bellows for extended life

	Range PSIG	Diff. PSI	SPST - OPEN LOW						SPST - OPEN HIGH			
			Male Flare	LIST	36" Cap. with Flare Nut	LIST	48" Cap. with Flare Nut	LIST	Male Flare	LIST	36" Cap. with Flare Nut	LIST
R12/R500/ R134a	(12") to 50	5 to 35	**010-1401**	-	**010-1402**	**$347.00**	-		Use 016		-	
R22/R502	(10") to 100	10 to 40	-		**010-1483**	$332.00	-		Use 016		011-3099	
		* Manual Reset	Use 016		Use 016		Use 016		Use 016		Use 016	
	50 to 150	10 to 40	Use 016		Use 016		Use 016		Use 016		Use 016	
	100 to 250	20 to 100	-		-		010-2000	$337.00	-		-	
	100 to 400	40 to 150	**010-1894**	-	**010-2054**	-	-		Use 016		Use 016	
		17 Fixed	-		Use 016		-		Use 016		Use 016	
	150 to 450	35 to 150	Use 016		Use 016		Use 016		Use 016		Use 016	
		50 to 100	Use 016		Use 016		Use 016		Use 016		**011-1711**	-
		* Manual Reset	Use 016		Use 016		Use 016		Use 016		Use 016	

	Range PSIG	Diff. PSI	SPDT - OPEN HIGH OR LOW						DPST - OPEN LOW	
			Male Flare	LIST	36" Cap. with Flare Nut	LIST	48" Cap. with Flare Nut	LIST	36" Cap. with Flare Nut	LIST
R12/R500/ R134a	(12") to 50	5 to 35	**016-120**	-	016-557	$449.00	-		020-7002	
R22/R502	(10") to 100	10 to 40	**016-107**	-	**016-527**	$377.00	-		020-7004	
		* Manual Reset	*016-585	-	-		*016-261	-	-	
	50 to 150	10 to 40	-		016-166	$409.00	-		-	
	100 to 250	20 to 100	-		-		-		-	
	100 to 400	40 to 150	-		**016-108**	-	-		**020-7006**	-
		17 Fixed	-		**016-142**	-	-		-	
	150 to 450	35 to 150			-		-		-	
		50 to 100	016-503	-	-		-		-	
		* Manual Reset	016-209@	-	-		**016-200**	-	-	

@ 016-209 available with 350 PSIG limit stop

Bold part numbers are high volume products

PRESSURE CONTROLS

RANCO

Dual Pressure Controls

These controls offer a tailored variety of ranges and options for refrigerants. Low and high pressure functions are combined into a single control with one switch.



Features:

- Exclusive "convertible" reset for manual or automatic high pressure reset on some models
- NEMA 1 enclosure with non-conductive cover
- Front-located captive cover screw
- Super Cap capillary protection system
- Universal mounting and compact design
- Color Coded Flare Nuts



Model Selection Chart:

Low Pressure Opens Low		High Pressure Opens High		Reset		SPST						DPST	
Cut-In Range PSIG (Inches Mercury Vacuum)	Diff. PSI	Cut-Out Range PSIG	Diff. PSI	Low Press. (Opens Low)	High Pressure (Opens High)	Male Flare	LIST	36" Cap. with Flare Nut	LIST	48" Cap. with Flare Nut	LIST	36" Cap. with Flare Nut	LIST
(12") to 50	5 to 35	100 to 250	50 Fixed	Auto.	Automatic	012-1505	-	**012-1506**	$523.00	-		-	
				Auto.	**Auto/Man. (convertible)	-		-		-		022-7702	
(12") to 50	5 to 35	150 to 450	70 Fixed	Auto.	Automatic	012-4139		**012-1502**	$519.00	-		-	
				Auto.	†Auto/Man. (convertible)	012-4842				012-4833	-	-	
(10") to 100	10 to 40	150 to 450	70 Fixed	Auto.	Automatic	012-1550	-	**012-1549**	-	-		-	
				Auto.	†Auto/Man. (convertible)	012-4846	-			**012-4834**	-	022-7706	
(10") to 100	*	150 to 450	†	*Manual	†Manual	-		012-1594	$519.00	-		-	

* Locks open on pressure decrease, pressure must rise approx. 10 PSI to be reset

** Locks open on pressure increase, pressure must drop approx. 50 PSI to be reset

† Locks open on pressure increase, pressure must drop approx. 70 PSI to be reset

Bold part numbers are high volume products

Lube Oil Protection Controls

These lube oil protection controls guard pressure-lubricated refrigeration compressors against major damage due to loss of oil pressure. If adequate oil pressure is lost, the built-in S30 Time Delays Switch starts timing. If the oil pressure does not recover within the set period, the control circuit is opened, stopping the compressor.

Features:

- Alarm circuit standard
- Ambient temperature compensated
- Super Cap capillary protection system
- High impact, non-conductive cover
- Field replaceable switch module
- Manual reset
- Industry standard circuitry and terminal identification



Model Selection Chart:

Part Number	Pressure Range PSID	Time Delay (seconds)	LIST
36" CAPILLARY WITH FLARE NUT			
***P30-5826**	9 Fixed	120	$772.00
	MALE FLARE		
*P30-5827	9 Fixed	120	$755.00

*Copeland Specifications

Note: The range is the difference between the crankcase pressure and the oil pump pressure that will energize the time delay switch and lead to shut down. The difference in oil pressure needs to rise 7 PSI above the range to de-energize the time delay switch and prevent eventual shutdown.

Bold part numbers are high volume products.

TEMPERATURE CONTROLS

RANCO



General Range Temperature Controls

Features:
- Maximum adjustment accuracy with 7 revolution range adjustment screws
- NEMA 1 enclosure with non-conductive cover
- Laser-welded bellows for extended life
- Constant cut-in setting

Model Selection Chart:

Applications	Range (°F)	Differential (°F)	SPST - Opens Low					
			72" Capillary	LIST	Air Coil	LIST	72" Cap. Remote Bulb	LIST
Extra Low (Ice Cream)	-55 to 0	*†3 to 20	010-1000	-	-		-	
	-35 to 15		010-1419	-	-		010-1433	-
Low (Freezer)	-15 to 40		-		010-1072		**010-1408**	-
		1.5 Fixed	-		-		-	
Medium	22.5 to 47.5		-		-		-	
	0 to 55	*†3 to 20	**010-1416**	-	**010-1418**	-	**010-1409**	-
		7 to 55	-		-		010-1473	-$357.00
		**Manual Reset (Freeze Protection)	-		-		-	
Med./High	0 to 100	6 to 20	-		-		-	
High	25 to 75	*†3 to 20	-		010-1802		**010-1410**	-
	30 to 90	2.5 Fixed	-		-		-	
	50 to 105	*†3 to 20	-		-		-	

Applications	Range (°F)	Differential (°F)	SPDT - Opens High or Low						DPST - Opens Low	
			72" Capillary	LIST	Air Coil	LIST	72" Cap. Remote Bulb	LIST	96" Cap. 3/8 x 6" Cross Ambient Bulb	LIST
Extra Low (Ice Cream)	-55 to 0	*†3 to 20	-		-		-		-	
	-35 to 15		-		-		-		-	
Low (Freezer)	-15 to 40		-		-		-		-	
		1.5 Fixed	016-588		-		-		-	
Medium	22.5 to 47.5	2.5 Fixed	-		-		016-601	-	016-601	-
	0 to 55	*†3 to 20	016-111	-	-			-	**016-104**	-
		7 to 55	-		-		-		-	
		**Manual Reset (Freeze Protection)	016-264 96" Cap	-	-		016-263	-	016-263	-
Med./High	0 to 100	6 to 20	-		-		-		-	
High	25 to 75	*†3 to 20	-		-		-		-	
		2 Fixed	-		-		-		-	
	30 to 90	2.5 Fixed	-		@		-		-	
	50 to 105	*†3 to 20	-		@@		-		-	

* Locks open on pressure decrease, pressure must rise approx. 10 PSI to be reset *† Differential at the low end of range is 6 to 25

@ Use 052-6910 @@ Use 060-101 **Bold** part numbers are high volume products

TEMPERATURE CONTROLS

RANCO



Wide Range Temperature Controls

The 060 uses the industry's most advanced sensing element technology.

Features:

- Virtually unaffected by ambient temperature
- Gas-filled, non-position-sensitive bulb
- Adjustable differential
- 17 FLA for both 120 and 240 Vac
- Front-located captive cover screw
- NEMA 1 enclosure with non-conductive cover
- 10 times the setting sensitivity of most other wide range controls

Model Selection Chart:

Range (°F)	Differential (°F)	SPDT Opens High or Low			
		96" Capillary 3/8" x 6" Cross Ambient Bulb	LIST	Air Coil	LIST
-35 to 95	4 to 50	**060-100**	-	060-101	-

Bold part numbers are high volume products

Soft Ice Cream and Bulk Milk Controls (and other narrow differential applications)



These controls provide a narrow adjustment range and a fixed 1.5° differential for close, accurate control.

Model Selection Chart:

Typical Applications	Range (°F)	Differential (°F)	SPDT Opens High or Low		
			36" Capillary 3/8" x 6" Cross Ambient Bulb	72" Capillary	LIST
Bulk Milk Cooler	22.5 to 47.5	1.5 Fixed	016-601	-	-
Soft Ice Cream Machine	-15 to 40		-	016-588	-

JOHNSON/RANCO/
HONEYWELL 565-666

TEMPERATURE CONTROLS

RANCO

A22/30 Control Chart

Part #	Switch Function	Off Position	Knobs Assemby / Screwdriver Slot Adaptable	Differential	Normal Off	Normal On	Warm On	Cold Off	Cold On	Capillary	LIST
A22-392-RSW	SPDT	NO	ADAPTABLE	23.5	31	54.5	61.5	14	37.5	48"	$352.00
A22-1112-RSW	SPST	NO	ADAPTABLE	5	9	39	44	25	30	72"	$280.30
A30-180-RSW	SPST	YES	ADAPTABLE	13	6	22	38	-4	9	42"	$254.50
A30-184-RSW	SPST	YES	ADAPTABLE	19	16	25	40	-7	N/A	42"	$261.60
A30-260-RSW	SPST	YES	ADAPTABLE	6	N/A	22	30	.5	5.5	72"	$261.60
A30-261-RSW	SPST	YES	ADAPTABLE	6	20	N/A	61	32	38	84"	$258.50
A30-262-RSW	SPST	YES	ADAPTABLE	23	11	33.5	47	.5	15	84"	$262.30
A30-263-RSW	SPST	YES	ADAPTABLE	8.5	-3	5.5	20.5	-24	23	84"	$239.20
A30-301-RSW	SPST	NO	ADAPTABLE	8.5	-6	5.5	20	-21.5	N/A	84"	$254.60
A30-308-RSW	SPST	NO	ADAPTABLE	11	-12	-1	12.5	-30.5	N/A	84"	$280.30
A30-310-RSW	SPST	NO	ADAPTABLE	20	-14	6	23	-24	N/A	36"	$318.00
A30-314-RSW	SPST	YES	ADAPTABLE	8	-10	-2	23	-23	N/A	54"	$318.00
A30-323-RSW	SPST	YES	DIAL	10	-5	5	10.5	-11	N/A	48"	$224.30
A30-2209-RSW	SPST	YES	DIAL	8	-	44.5	N/A	35	N/A	48"	$272.80
A30-2210-RSW	SPST	YES	DIAL	6	32	40	42	30	43	48"	$243.10

VaRifix Ranco Service Replacement Thermostat

Part #	Ref. No.	Temp °C		Capillary Length (mm)	Application	LIST
		N.I.	N.O.			
VC1-RSW	AC1	-5	-14.5	1200	Refrigerator / Manual Defrost	$45.30
VF3-RSW	AF3	-16	-24	2000	Freezer and Ice Cream Cabinet	$43.90
VB7-RSW	AB7	7	3	1200	Bottle or Beverage Cooler and Frost Free Refrigerator	$43.90
VT9-RSW	AT9	33.5	-18.5	1200	Refrigerator Auto Defrost	$43.90

TEMPERATURE CONTROLS
BEVERAGE/REACH-IN MED. TEMP.
RANCO

A12 Series Constant Cut-In Control

The Ranco A12 Controls provide a constant cut-in feature. The constant cut-in design is generally used to provide an Off-Cycle defrost function. Each time the control cycles off, the control contacts will remain "open" until the evaporator is cleared of any frost that may have accumulated from the previous "On" cycle. The A12 constant cut-in setting will be between 35 and 41 degrees F (See control chart).

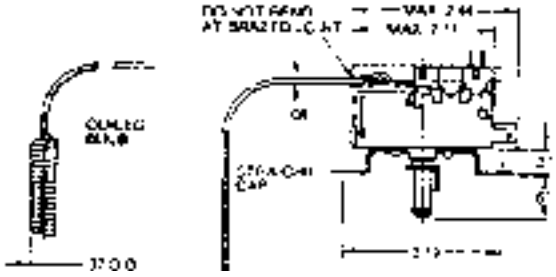

Generally, medium refrigeration units without hot gas or electric defrost systems will use a Constant Cut-In Control. (A12 series)
Rotating the knob/dial changes only the Cut-Out setting. The Cut-In setting remains the same regardless of the knob/dial position.

Model Selection Chart:

Part Number	Normal Off (°F)	Warm Off (°F)	Cold Off (°F)	Cut-In Off (°F)	Capillary Length	LIST
A12-1506	15	22	9	38	39 x 3/8 x 1-3/8"	$305.00
A12-700	18	26	11.5	37	84"	$270.00
A12-701	23.5	31	15	41	84"	$277.80
A12-1560	24	29	19	38	72"	$270.00

Defrost Termination / Fan Delay Controls

The F25 control terminates defrost and delays the evaporator fan operation on electric heat, hot gas and reverse cycle commercial refrigeration systems.

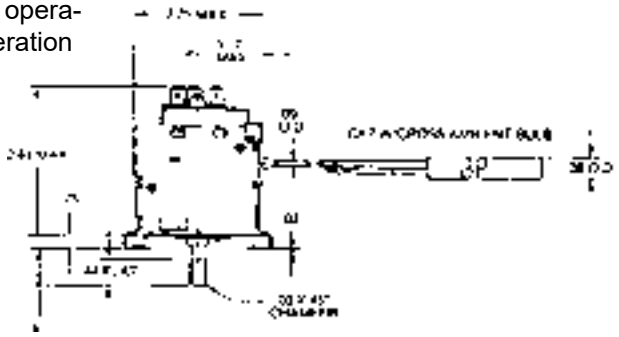

Features:
- Prevent warm, moist air from being circulated into the refrigerated space
- Remote bulb sensing
- Factory-fixed low event for fan delay

Model Selection Chart:

Part Number	Switch Action	Fan "On" Temperature (°F)	Defrost Termination (°F)	Sensing Element Style	LIST
F25-107	SPDT	20 Fixed	40 to 75 Adjustable	60" Capillary with 3/8" x 4" Cross Ambient Bulb	$455.00

Bold part numbers are high volume products

ADAPTABLE AIR CONDITIONER CONTROL KITS

RANCO

Adaptable Replacement Cycling Controls for Room Air Conditioners

Adaptable control to replace OEM controls which govern the ON/OFF compressor function. Includes break-off shaft, dial knob and mounting bracket.



Model Selection Chart:

Part Number	Switch	Dial Range (°F)	Differential (°F)	Sensing Element		Popular Applications	LIST
				Capillary			
				Length	Type & Bulb Size		
A30-X450	SPST	58 to 89	5	-	Air Coil	-	**$224.30**
A30-X451	SPST	58 to 86	5	36"	Straight	G.E. WJ28X500 G.E. WJ28X512	**$224.30**
A30-X453	SPST	58 to 85	5	18"	Straight	Whirlpool 485760 Frigidare 8006445	**$224.30**
A22-2451	SPDT	45 to 81	5	27"	Straight	G.E. WJ28X504	**$280.30**

Bold part numbers are high volume products "X" version rated at 30 FLA at 120/240V

ICE EQUIPMENT, THERMAL STORAGE AND WATER COOLER CONTROLS

RANCO

Ice Bank Controls

Suitable for soft drink dispensers, drink vending machines and ice builders for thermal storage. Uses a special water-filled bulb and transmission fluid to control ice thickness in applications utilizing a refrigerated water bath with ice bank reserve capacity.

Model Selection Chart:

Part Number	Switch	Cut-Out Range (°F)	Differential (°F)	Sensing Element	LIST
018-100	SPST	50 to 65	6	24" Capillary	-



Ice Bin Level Control



Direct replacement control for ice machine applications. Provides narrow differential for accurate control of bin level.

Model Selection Chart:

Part Number	Switch	Range (°F)	Differential (°F)	Sensing Element	LIST
A22-1129	SPDT	35 to 51	6	48" Capillary	$280.30

JOHNSON/RANCO/
HONEYWELL 565-666

ICE EQUIPMENT, THERMAL STORAGE AND WATER COOLER CONTROLS

RANCO

Ice Bank / Liquid Level Controls

The E37 uses solid state circuitry to control ice banks, ice thickness or water level.

Features:

- Easy installation
- Remove sensing, up to 300 feet
- Includes three probe sensor with 118" leads. Allows field adjustment of liquid or ice thickness
- Accurate control
- Low voltage, AC sensing, eliminates electrolysis
- SPDT switching relay. Activates at 45K ohms sensor resistance, deactivates at 85K ohms



Direct Replacement Water Cooler Controls

Ranco's Water Cooler Controls will replace about 80% of your control needs for equipment from such manufacturers as Ebco, Elkay, Sunroc, Halsey-Taylor, Kelvinator and General Electric.



Features:

- Small compact design
- Computer calibrated
- Laser-welded bellows for reliability
- Patented switch for high performance

Model Selection Chart:

Part Number	Normal On (°F)	Normal Off (°F)	Differential (°F)	Cold Off (°F)	Warm On (°F)	Capillary Length	LIST
K-3001	53	46	7	37	61	48"	$148.90
K-3002	50	23	27	7	66	36"	$192.40

Bold part numbers are high volume products

REVERSING VALVES

RANCO

4-Way Pilot Valve

These solenoid operated Reversing Valves are slide type, 4-way with a 4-way Pilot valve and operate under the full pressure of the heat pump system. The valves are used on unitary, split system, and window-type heat pump applications. There are six different styles designed to meet your particular system need.

Part Number	Capacity (Tons)		Style#	Tube Size (I.D.)		Old Valve Number	LIST
	R22	R410A		Suction	High Pressure		
V1-408060-170	.4 to 1.0	.5 to 1.7	1	1/2"	3/8"	V1-188	$182.20
V1-406060-270	.4 to 1.0	.5 to 1.7	2	3/8"	3/8"	V1-158	$214.90
V2-408060-170	.75 to 2.0	.9 to 2.2	1	1/2"	3/8"	V2-128	$214.90
V2-408060-270	.75 to 2.0	.9 to 2.2	2	1/2"	3/8"	V2-100	$238.30
V2-4100F0-370	1.0 to 2.5	1.3 to 2.5	3	5/8"	3/8" O.D.	V2-179	$238.30
V2-410060-470	1.0 to 2.5	1.3 to 2.5	4	5/8"	3/8"	V2-150	
V3-410080-770	1.0 to 2.8	1.3 to 3.1	5	5/8"	1/2"	V3-1003	$191.50
V3-412080-870	1.0 to 3.0	1.3 to 3.5	5	3/4"	1/2"	V3-1004	$265.20
V6-412080-170	1.0 to 5.5	1.3 to 6.7	1	3/4"	1/2"	V6-2101	$388.00
V6-414080-170	1.0 to 5.5	1.3 to 6.7	1	7/8"	1/2"	V6-2103	$350.00
V6-414120-170	1.0 to 5.5	1.3 to 6.7	1	7/8"	3/4"	V6-2106	
V10-414080-170	3.0 to 8.5	3.8 to 10.1	1	7/8"	1/2"	V10-2500	$350.00
V10-414120-170	3.0 to 8.5	3.8 to 10.1	1	7/8"	3/4"	V10-2750	$697.00
V10-418140-170	3.0 to 9.5	3.8 to 11.7	1	1 1/8"	7/8"	V10-2762	$760.00
V10-414140-470*	3.0 to 8.5	3.8 to 10.1	1	7/8"	7/8"	V10-2765	$413.00
V12-4220T0-270	6.0 to 12.0	6.3 to 15.0	6	1 3/8"	1 1/8" O.D.	V12-321	$1,423.00

* Heat Recovery

STYLES

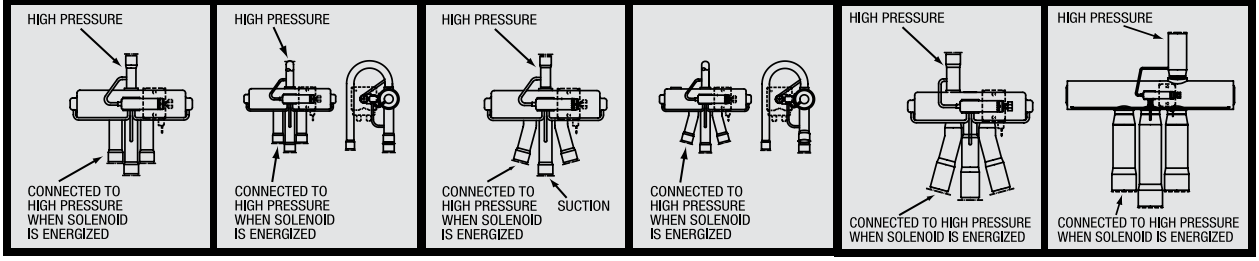

Style 1 | Style 2 | Style 3 | Style 4 | Style 5 | Style 6

Type LDK Solenoid Coils For Heat Pump Reversing Valves

CHOOSING THE CORRECT SOLENOID COIL

Type LDK solenoid coils are designed for use with V1-4 / V2-4 / V3-4 / V6-4 / V10-4 / V12-4 RANCO Heat Pump Reversing Valves. These color coded epoxy encapsulated, continuous duty, moisture resistant magnetic coils are designed to operate the pilot valve controlling the Reversing Valves listed above. Included with the solenoid coil is a W29 wiring harness with 48" leads.

WARNING

*Solenoid coils are **not interchangeable**. LDK Series coils must be used with the Vxx-4 Series reversing valves and the L30 Series coils used with the previous version valves listed above.*

Solenoid Coils

Part Number	Voltage (VAC)	Color Code	Watts		Old Coil Number	LIST
			50 Hz	60 Hz		
LDK-110000-070	24	Red	5	4	L30-0024	$90.10
LDK-310000-070	120	Black	5	4	L30-0120	$65.80
LDK-410000-070	208/240	Green	5	4	L30-0240	$75.80

HEAT PUMP CONTROLS

RANCO

Timer Activated Heat Pump De-Ice Controls

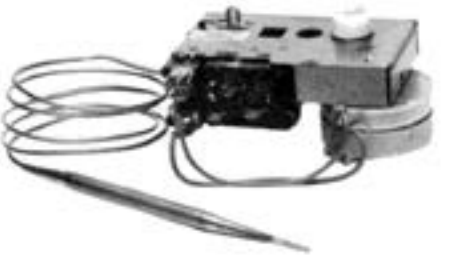

Provide field-adjustable timer control for de-icing of heat pump outdoor coils. Defrost cycle starts every 30, 45, or 90 minutes. Interlock prevents more than one defrost cycle per time period and temperature must be 28°F or lower to start. Termination temperature is adjustable from 55° to 78°F.

Model Selection Chart:

Part Number	Switch	Voltage	Sensing Element	LIST
E15-2601	SPDT	240	60" Capillary with 5/16 x 4-5/16" Bulb	$539.00

Temperature Activated Heat Pump De-Ice Control

Provides automatic temperature-activated de-icing of heat pump outdoor coils, 120/240 volt operation.



Resistance Heat Thermostat for Heat Pumps

Ranco's C12-2001 Control is an adjustable thermostat which holds back additional stages of supplemental heat until the outdoor temperature falls below the control's setpoint. There are many ways in which the control can be wired into the system. However, the C12-2001 is typically wired through the relay circuit in conjunction with the indoor thermostat. Most indoor thermostats used with heat pumps will complete a circuit to the supplemental heat if the indoor temperature drops approximately 2°F or more below the indoor thermostat's setting.



HEAT / COOL CONTROLS

RANCO

Single Stage Control For Packaged Terminal, Room and Through-The-Wall Heat/Cool Units



This control replaces many OEM controls on heat/cool units. C12-9025 replaces York 026-17371-00 / Heil Quaker 40889-001. C12-9018 replaces Singer / McQuay / Snyder General 02005451 and 02005610.

Model Selection Chart:

Part Number	Switch	Temperature Range (°F)	Dial Shaft	Diff. (°F)	Sensing Element	Parts Package	LIST
C12-5010	SPDT	60 to 98	3/4"	3	36" Cap. with 3/8 x 9" Bulb	Dial Plate Knob	$271.30

Two-Stage Heating/Cooling Control



This control replaces many OEM controls on two-stage cooling and heat/cool units. The two SPDT switches are staged 3.5°F.

Model Selection Chart:

Part Number	Switch	Temperature Range (°F)	Differential (°F)	Sensing Element	LIST
C17-100	2-SPDT	71 to 101 (Cooling) 64 to 94 (Heating)	3.5	26" Capillary with 3/8 x 8-9/16" Bulb	$397.00

Discharge Feedback Controls

Discharge feedback thermostats type C17 are replacements for room, packaged-terminal and through-the-wall air conditioning units equipped for either manual or automatic heat/cool changeover. The C17 has separate switches for heating and cooling. A wide energy saving comfort Zone ("dead band") is provided between heating and cooling cycles. A limited adjustment range prevents user from over heating or cooling conditioned space.

Features:

Dual bulb thermostats feature two sensing bulbs. The bulbs respond at the same time to both return and discharge air temperature. A limited adjustment range prevents the user from over heating or cooling space. As a result, room temperature variations are minimized. Comfort is improved and operating costs are reduced.

Control Applications:

These controls are used on Room Air Conditioners, Heat/Cool, Package-Terminal Air Conditioners and Through-The-Wall Air Conditioners - Heat/Cool



THERMOSTAT GUARDS

Plastic Thermostat Guards

Features

- Hi-impact plastic guards.
- Horizontal and vertical mounting.
- Heavy duty lock and key.
- Comes with complete mounting hardware.
- Each model includes a ring & solid base.
- Colour - clear cover with off white base.

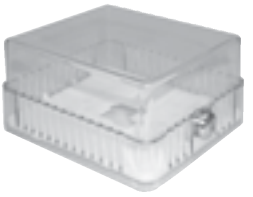

TG2
Illustrated



TG5
Illustrated



585-TG
Illustrated

Plastic Thermostat Guards

Part #	Base	Inside Dimensions L	W	D	Cross Reference		LIST
TG5	Ring	3.75"	3.50"	2.62"	BTG-EK	F29-0252	$56.10
	Solid	4.00"	4.00"	2.50"	ECST	029-0178 029-0179	
TG2	Ring	5.25"	4.62"	3.12"	BTG-K	F29-0251	$157.50
	Solid	5.75"	5.00"	2.81"	KCBT	F29-0257	
TG6	Ring	6.31"	3.62"	3.06"	BTG-RK	F29-0253	$107.60
	Solid	6.62"	4.12"	2.75"	RCBT	029-0143	
TG	Ring	8.18"	4.62"	3.56"	BTG-UK	F29-0254	$65.40
	Solid	8.50"	5.00"	3.87"	UCBT	029-0198	

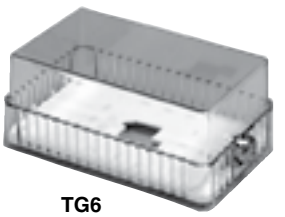

TG6
Illustrated

Mounting Base Types
All mounting bases are plastic.

Metal Thermostat Guards

Features

- Durable metal guards.
- Horizontal and vertical mounting.
- Heavy duty lock and key.
- Comes with complete mounting hardware.
- Each model includes a ring & solid base.*
- Colour - off white cover with off white base.

Mounting Base Types

MG3	*Plastic*
MG12S	*Metal*
TG9	*Metal*



MG3

Metal Thermostat Guards

Part #	Base	Inside Dimensions L	W	D	Cross Reference		LIST
MG3	Ring	5.31"	4.31"	3.00"	BTG-KWM	KMRT	$72.70
	Solid	5.62"	5.12"	2.87"	BTG-KM	KMST	$74.60
MG12S*	Solid	6.37"	4.25"	3.00"	BTG-54VL	F29-0255	-



MG12S

Part #	Description	LIST
TG9	Beige Steel w/two Bases, 6" x 4" x 3"	$105.10



TG9

* Hinged metal guards do not come with both bases.

THERMOSTAT GUARDS
HONEYWELL

TG510, TG511, TG512 Versaguard Universal Thermostat Guards

Versaguard Universal Thermostat Guards...
to protect any Commercial Thermostat

Replacement Parts and Accessories: 191990A Replacement Keys



TG510



TG511



TG512

Model No.	Inside Dimensions (in.)		Outside Dimensions (in.)			Guard Cover Material	Ring Base Material	Wallplate Material	Use With	LIST
	Height	Width	Height	Width	Depth					
TG510A1001-RES	4-7/16	4-7/16	5-7/8	5-7/8	2-1/2	clear acrylic	clear acrylic	opaque polystyrene	T87/Q539, Others	$98.50
TG511A1000-RES	5-1/16	6-1/16	6-1/2	7-1/2	2-15/16	clear acrylic	clear acrylic		874/Q674, Others	$102.30
TG511D1004-RES	5-1/16	6-1/16	6-3/8	7-3/8	2-7/8	painted metal	opaque polystyrene			
TG512A1009-RES	5-7/8	8-3/8	7-1/4	9-3/4	3-3/8	clear acrylic	clear acrylic		T8600, T8090, Others	$106.10
TG512D1003-RES	5-7/8	8-3/8	7-1/8	9-5/8	3-1/4	painted metal	opaque polystyrene			

SINGLE STAGE THERMOSTATS

HONEYWELL - MERCURY FREE

T87 Thermostat - The Round



Provides temperature control for 24 to 27 Vac residential heating, cooling or heating-cooling systems

- Available with two or three-wire wallplate for heating-only, cooling-only, or heating-cooling systems with remote switching
- Adjustable heat anticipator for comfortable temperature control

Adjustable Heat Anticipator: 0.1A to 1.2A
Cooling Anticipator: 0A to 1.5A, 24 to 27 Vac.

resideo

Part #	Type	Description	LIST
T87K1015-RES	Mechanical	HON H/O ROUND 5-30C T-STAT MERCURY FREE GAS/OIL/STEAM/ FORCED AIR/GRAVITY WHITE	$183.30
T87N1018-RES	Mechanical	HON H/C ROUND 5-30C T-STAT MERCURY FREE GAS/OIL/STEAM/ FORCED AIR/GRAVITY WHITE	$302.00

T8775 Electronic Round Non-Programmable Thermostat



- One setback program for nighttime energy savings
- Compatible with 24 volt single-stage gas, oil and electric heating and cooling systems
- Advanced power stealing
- Premier White colour
- Decorator cover wallplate
- Resistor included for use with Taco zone valves
- Front wired for easy installation
- Simple 4-wire installation (5-wire not available)
- Cycle rate and clock configurable through the keyboard
- Electronic memory chip (EEPROM) - no batteries required for memory retention in case of power outage

T822/834K Mercury-Free Econostat



The economic choice for meeting mercury-free regulations.

Features
- Available in heat/cool and heat only models
- Budget price
- Meets mercury-free requirements
- 5-Year warranty

resideo

Model Number	Description	LIST
T822K1034-HON	BI-METALIC T-STAT H ONLY	$88.40
T834N1010-HON	H/C T-STAT C/W FAN SWCH	$124.10

WIFI THERMOSTATS
HONEYWELL

Lyric Wi-Fi Thermostat

resideo

The updated Lyric Round™ thermostat is ideal for customers who want to connect their home systems via the Lyric app, maximizing savings, comfort, and security. Customers gain intelligent benefits, such as location-based control using their smartphone location to adjust for comfort when they're home, savings when they're away.

The Lyric Round is also compatible with **Apple HomeKit™** and **Samsung SmartThings™**, and provides proactive smart alerts about maintenance needs and extreme condition. Installation and setup are easy via the on-screen menu for installer setup.



WiFi 9000 Color Touchscreen Thermostat

resideo

Honeywell's Wi-Fi 9000 allows remote access to the thermostat through a computer, tablet, or smart phone with Honeywell's Total Connect Comfort Service.



Features

- Get Connected – Connect to home's existing Wi-Fi network
- Remote Control – Convenience, comfort and control from anywhere through web, tablet or smartphone access
- Apps available for tablet and smartphones
- Automatic software updates through Wi-Fi
- Selectable to 7 Day or Non-Programmable
- Program thermostat locally or over the web or app
- Customize the screen color to match any décor

Part #	LIST
TH9320WF5003/U	$742.00

WIFI THERMOSTATS
HONEYWELL

Wi-Fi VisionPRO® 8000 Touchscreen Thermostat

Wi-Fi VisionPRO® 8000 for residential or commercial use.
Stages up to Up to 3 Heat / 2 Cool.

Your customers want comfort, convenience and connectivity. With the Wi-Fi VisionPRO, you can offer them all three. Using an existing Wi-Fi network plus Honeywell's free Total Connect Comfort services, the Wi-Fi VisionPRO allows homeowners to remotely control their comfort settings and manage their energy costs – with ease.



Features

- Intuitive programming for easier setup
- Remote comfort control via computer, tablet or smartphone
- Universal application across more system types
- Equipment check/change reminders
- Programmable for annual energy savings

Part #	LIST
TH8321WF1001/U	$655.00

T Series Thermostats

resideo

Features

- **Intuitive setup that fits your technicians to a T**
  Every T Series thermostat features on-screen menus with familiar installer setup (ISU) steps, helping to eliminate the learning curve that can come with a new product.
- **Faster installs that fit your operation to a T**
  With the new UWP mounting system, you can standardize your training program, install process, and truck stock – helping your techs get in and out and on their way more quickly.
- **Easy upsell that fits your revenue model to a T**
  The T Series has a snap-together design that enables you to easily move customers from a non-connected to a connected thermostat without having to rip and replace the connector and cover plate.*
  **C-wire required*



Part #	Description	LIST
Lyric T6 Pro Wi-Fi Series		
TH6320WF2003	3H/2C Heat Pump or 2H/2C Conventional	$576.00
TH6220WF2006	2H/1C Heat Pump or 2H/2C Conventional	$432.00
T6 Pro Series		
TH6220U2000/U	2H/1C Heat Pump or 2H/2C Conventional	$235.70
TH6210U2001/U	2H/1C Heat Pump or 1H/1C Conventional	$233.80

ELECTRONIC THERMOSTATS
HONEYWELL

VisionPRO 8000



Maximum comfort and energy savings made effortless.

resideo

- Effortless, menu-driven programming
- Real-time clock
- Up to 3H/2C - conventional and heat pump
- Large 10-square-inch touchscreen display
- 5-Year warranty

Residential

Part #	Description	LIST
TH8320R1003/U	3H / 2C	$745.00
TH8110R1008/U	1H / 1C	$625.00
C7089U1006	Outdoor Sensor	$103.80
C7189U1005	Indoor Air Sensor	$119.90
C7089R1013	Wireless Outdoor Sensor	$226.40
C7189R1004	Wireless Indoor Sensor	$171.30

CommercialPRO 8000



resideo

- 7 day programmable touchscreen thermostat
- Selectable for residential or light commercial use
- Can be wired directly to the equipment, used with the THM5421R1021 Equipment Interface Module or used with the THM4000R1000 TrueZONE Wireless Adapter
- Works with the RedLINK™ accessories including the RedLINK™ Internet Gateway, Portable Comfort Control, Wireless Outdoor Sensor, Wireless Indoor Sensor, Wireless Entry/Exit Remote and Wireless Vent and Filter Boost Remote.

Commercial

Part #	Description	LIST
TH8321R1001/U	Touchscreen 3H/2C	$764.00

FocusPRO 6000



Simplicity and comfort that's easy to see - and easy to program.

- Easy-access battery replacement
- Built-in instructions
- Largest display in its class
- Up to 2H/2C - conventional and heat pump
- 5-Year warranty

Part #	Description	LIST
TH6220U2000/U	2H / 1C	$316.00

FocusPRO 5 Series



Simplicity and comfort that's easy to see.

- Easy-access battery replacement
- Largest display in its class
- Up to 3H/2C - conventional and heat pump
- Dual-powered (battery and/or hardwire)
- 5-Year warranty

Part #	Description	LIST
TH4110U2005/U	1H / 1C	$167.90

ELECTRONIC THERMOSTATS

HONEYWELL

RedLINK Wireless Products

resideo

Wireless FocusPRO Systems - (Non-Zone)

	**Programmable Wireless FocusPRO Kit — YTH6320R1001** Programmable FocusPRO, Equipment Interface Module and Return Air Sensor
	**Non-Programmable Wireless FocusPRO Kit — YTH5320R1000** Non-Programmable FocusPRO, Equipment Interface Module and Return Air Sensor

EConnect™ Wireless Thermostats for Electric Heat

	**Wireless Line Volt Thermostat Kit — YTL9160AR1000** EConnect Thermostat and Equipment Interface Module

Wireless Zoning Systems

	**Programmable Wireless Zoning Adapter Kit —YTH6320R1023** Programmable Wireless FocusPRO Thermostat and Wireless Adapter

Individual System Components

	**Prestige 2.0 Thermostats - THX9421R5021WW/U** 2-Wire Thermostat with RedLINK®
	**Wireless FocusPRO Thermostats - TH6320R1004** 5-1-1 Programmable FocusPRO Thermostat
	**Wireless FocusPRO Thermostats - TH5320R1002** Non-Programmable FocusPRO Thermostat

Accessories

	**THM6000R7001/U** Gateway Ethernet Cable and Power Cord
	**C7189R1004** Wireless Indoor Sensor
	**C7089R1013** Wireless Outdoor Sensor
	**REM5000R1001** Portable Comfort Control
	**C7735A1000** Return/Discharge Air Temperature Sensor
	**THM5421R1021/U** Prestige IAQ Equipment Interface Module

	**THM5320R1000** Equipment Interface Module
	**THM4000R1000** Wireless Adapter
	**THP9045A1023** Prestige WireSaver Module
	**REM1000R1003** Wireless Entry/Exit Remote
	**HVC20A1000** Wireless Vent and Filter Boost Remote 20/40/60 Minute Ventilation and Filtration Timer

ELECTRONIC THERMOSTATS

HONEYWELL

T498A,B Electric Heat Thermostats



Provide line voltage control of electric heating systems.

- Include thermometer
- Include long lasting Micro Switch mechanism; makes on temperature fall

Temperature Setting Range: 40°F to 80°F (5°C to 27°C)
Fixed Differential: 3°F (2°C)
Electrical Ratings (resistive): 22A at 120/208/240 Vac; 19A at 277 Vac
Sensing Element: Bimetal
Performance Certification: T498A: 16A resistive at 120, 208, 240 and 277V
Note: To maintain cycles per hour, a minimum load of 8 amps is required
Mounting: Mounts directly on 2 x 4 in. outlet box

Model Number	Switching	Positive Off (Yes/No)	Sensing Element	Electrical Rating	Styling / Colour	Setting Range	Thermometer	Range Stops and Locking Cover Included	LIST
T498A1927	Spst	No	Bimetal	Resistive	White	5°C t 27°C	No	No	$77.60
	Dpst	Yes			Beige				
T498B1652							No	Yes	$71.30
T498B1678					White		No	No	$105.40

TEMPERATURE CONTROLLERS

T775 Electronic Remote Temperature Controllers



- Easy-To-Use Graphical Interface
- Internal Time Clock Scheduler give you more control of the equipment without needing to purchase an additional time clock.
- Up To Two Independent Modulating Outputs — Each output can be individually configured for 0-10 Vdc, 2-10 Vdc, 4-20 mA or Series 90
- NEMA 4X Enclosure Option
- Modulating High Or Low Limit Control
- Configurable Minimum Off Time
- Sensor Calibration — Calibrate input sensors up to +/-10° F
- Universal Model To Control Pressure, Humidity Or Temperature —The T775U Universal model has an easy setup for configuring control of pressure or humidity with a 0-5Vdc, 0-10 Vdc or 4-20 mA input. Control humidity with % RH displayed, CO2 with ppm displayed, or control pressure with in. w.c., psi, Pa, or kPa displayed. Outputs include two modulating and two relay outputs that can each have their own setpoint.
- Special Sequencing Model For Staging Up To 12 Relays With Up To Two Setpoints
- Special Boiler Model — The T775 boiler model offers features including dedicated pump output, staging for up to 12 relays, digital output alarm, pump exercise, pump pre-purge and post-purge, warm weather shut-down, built-in scheduler, displayed run time, equal run time, first-on, first-off and more. With a single control, you can handle multi-boiler applications. The T775 boiler model can be used on chillers as well.

Models for Standard Applications

Model No.	LIST
T775A2009	$617.00
T775B2032	
T775B2024	$1,503.00
T775B2040	$1,457.00
T775M2006	
T775M2022	
T775M2048	$1,306.00
T775M2014	$2,005.00
T775M2030	$1,707.00
T775R2035	$1,191.00
T775R2027	$1,387.00

Models for Special Applications

Model No.	LIST
T775P2003	$1,703.00
T775L2007	$1,420.00
T775U2006	$1,306.00
T775U2016	$1,425.00'
T775S2008	$417.00

Compatible Components

Model No.	LIST
50021579-001	$226.20
T775-SENS-WR	$246.50
T775-SENS-WT	$311.00
T775-SENS-OAT	$245.70
C7031D2003	$250.90
C7031J2009	$494.00
C7046D1008/U-HON	$251.80
C7130B1009/U-HON	$205.20
H7625A2010	$595.00
H7655A1001	$379.00
H7655B2014	$642.00
P7650A1000	$582.00
C7232A1008	

See Next Page for More Product Details

T775 Electronic Remote Temperature Controllers (cont'd)

Models for Standard Applications

Product Number	Description	Replaces	Relay Outputs	Analog Outputs 4-20 mA, 0-10 Vdc, 2-10 Vdc, & Series 90	Floating Output[1]	Sensor Inputs Available	# Sensors Included[2]
T775A2009	Standard	T775A1001	1 SPDT			1	1
T775B2032	Standard	T775A1019, T775B1000	2 SPDT		1	2	1
T775B2024	Standard-NEMA 4X	T775C1009, T775D1008	4 SPDT		2	2	1
T775B2040	Standard	T775A1027, T775A1035, T775B1018, T775B1026, T775B1040	4 SPDT		2	2	1
T775M2006	Modulating		None	2		2	1
T775M2022	Modulating-NEMA 4X		2 SPDT	2		2	1
T775M2048	Modulating	T775E1015, T775E1023, T775E1056, T775E1064, T775E1098	2 SPDT	2		2	1
T775M2014	Modulating-NEMA 4X	T775G1005, T775G1013, T775G1021, T775G1039	4 SPDT	2		2	1
T775M2030	Modulating	T775E1114, T775F1022, T775F1055, T775F1089	4 SPDT	2		2	1
T775R2035	Reset option	T775J1001, T775J1076	2 SPDT		1	2	2
T775R2043	Reset option	T775J1019, T775J1027, T775J1035	None	2		2	2
T775R2027	Reset option	T775J1043, T775J1050, T775J1068	2 SPDT	2		2	2

[1] One floating output eliminates two relay outputs.
[2] 50021579-001 included with non-NEMA 4X models, and T775-SENS-WR included with NEMA 4X models.

Models for Special Applications

Product Number	Description	Replaces	Relay Outputs	Analog Outputs 4-20 mA, 0-10 Vdc, 2-10 Vdc, & Series 90	Digital Output	Dedicated Pump Output	Sensor Inputs Available	# Sensors Included	Expandable	Output Reset
T775P2003[2]	Special boiler with reset		4 SPDT		1	•	3	3	•	•
T775L2007	Stage sequencer with reset option		4 SPDT[3]				2	1	•	•
T775U2006	Universal — humidity, pressure, etc.	H775A1006, H775A1022, H775A1048, H775A1063, H775B1005, H775C1004, H775D1003, H775E1002	2 SPDT	2			2[4]			•
T775U2016	Universal - Control to sensor A (universal input) and Sensor B (temp) independently.		2 SPDT	2			2[4]			•
T775S2008	Relay expansion module		4 SPDT	Use with T77P or T775L						

[1] 4 or 8 more relays possible with T775S2008 relay expansion module(s).
[2] Includes dedicated pump output, equal run time, pump pre-purge and post-purge, WWSD and more.
[3] Up to 2 independent non-sequenced relays are also available.
[4] First input configurable for temperature 0-5Vdc, 0-10 Vdc, or 4-20 mA; second input is configurable for temperature only.

Compatible Components (Sensors and Transmitters)

	Part Number	Description	Application	Use With
Temperature	50021579-001	Standard temperature sensor for indoor applications	Monitoring temperature of return air, discharge air and mixed air	All T775 Series 2000 models
	T775-SENS-WR	Water-resistant sensor with 5-ft. leads		
	T775-SENS-WT	Water-tight sensor with 6-ft. leads		
	T775-SENS-OAT	Outdoor air temperature sensor	Outdoor air for reset	
	C7031D2003	5-in. immersion sensor (comes with immersion well, 50001774-001)	Hot or chilled water	
	C7031J2009	12-in. duct averaging sensor with four elements	Duct discharge air	
	C7046D1008	8-in. duct probe with mounting flange	Duct discharge air mounts on flat duct or plenum surface	
	C7100D1001	12-in. fast response, duct averaging sensor with flange	Averaging duct discharge air for use in troubleshooting	
	C7130B1009	Room mount sensor	Wall mount air temperature sensor	
Humidity	H7625A2010	Humidity transmitter, 2% RH accuracy, wall mount or duct mount	Humidity	T775U2006, T775U2016
	H7655A1001	Humidity transmitter, 5% RH accuracy, wall mount		
	H7655B2014	Humidity transmitter, 5% RH accuracy, duct mount		
Pressure	P7650A1000	Panel mount pressure sensor has ± 0-.1", 0-.25", 0-.5", 0-1" w.c. selectable pressure range, with display	Duct, room and building static pressure, clean rooms, hospitals, fume hoods and computer rooms	
CO_2	C7232A1008	Non-Dispersive Infrared (NDIR) carbon dioxide sensor, 0-2,000 ppm adjustable, 0/2-10 Vdc or 0/4 to 20 mA adjustable, one adjustable SPST relay output, wall or duct mount, LCD option and Honeywell logo option	Ventilation and air conditioning systems to control the amount of fresh outdoor air supplied to maintain acceptable levels of CO_2 in the space (demand control ventilation)	

VENTILATION CONTROLLERS

HONEYWELL

Honeywell Jade Economizer Demand Control Ventilation (DCV)

JADE™ economizers are the perfect examples of Honeywell innovation that makes saving energy easier for your customers. For buildings with less than 50,000 sq ft and standalone rooftop unit (RTU) applications, JADE is the best solution for a fresh air ventilation system. JADE Fresh Air Economizers with integrated demand control ventilation (DCV) systems are compatible with most individually packaged rooftop or built-up air handling units.

JADE eliminates the complicated set up typically associated with fresh air ventilation systems and can be installed and configured by technicians without significant training. JADE saves time during installation with clear instructions on its LCD display. This display also gives ongoing economizer status indicating whether the economizer is working properly, satisfying ventilation and cooling needs and minimizing energy costs.



Y7220A7215



M7215A1008



MS7503A2030



50001194-001

Part #	Description	LIST
W7220A1000	JADE Economizer logic module with DCV and commissioning for Economizer Systems	$1,023.00
MS7503A2030	Honeywell Damper Actuator Sr 27 Lb/inch 24v	$854.00
C7150B1004	Honeywell mix or discharge air temp. sensor	$117.20
C7400A2001	Honeywell solid state enthalpy sensor	$364.00
C7232B1014	Honeywell CO2 sensor, without display, duct mt., 1 analog output 2-10VDC & 1 SPST relay output	$1,334.00

LCBS CONNECT
HONEYWELL

Honeywell LCBS Connect™

LCBS Connect™ solution consists of a technology platform that includes three key components.

- Advanced remote monitoring and alerting with programming capabilities enable facilities managers and service contractors unparalleled system access.
- Cloud-based data storage provides secured access via smartphone, tablet, and personal computers so users can get data they need, when they need it.
- Hardware platform enables precise control of constant volume air handling units with selectable user interface.



Part #	Description	LIST
YCRL6438SR1000	LCBS controller and stat	$1,630.00
LGW1000	Gateway	$1,704.00
C7400S1000	Enthaply sensors	$285.30
50053060-001	Bracket for Enthaply sensors	$103.30
CTP-V-50	Analog current sensor	$239.40
C7232B1014	CO2 sensor	$1,334.00
C7250A1001	Dry bulb sensor	$80.90
TR40	Sylk wall module sensor	$1,071.00
TR40-CO2	Sylk CO2 wall module	$1,071.00
TR40-H-CO2	Sylk CO2 & humidity module	$1,086.00
209541B	Network termination device	$125.60 / Pack of 10
C7041B2005	Discharge air temperature sensor	$75.50
C7770A1040	Discharge air temperature sensor	$86.10
C7041D2001	Water probe temperature sensor 5 inch	$80.30
C7041F2006	Outdoor air temperature sensor	$109.70

LINE VOLTAGE THERMOSTATS

HONEYWELL



T631 Controller

For control of cooling, heating, or ventilating equipment

Model #	Control Range	Switching	Fixed Differential	LIST
T631A1162	35°F - 100°F	1-spdt snap switch	1.1°C	$716.00
T631B1070	35°F - 100°F	2-spdt snap switches	per switch 1.1°C interstage 1.9°C between switches	$858.00
T631C1103	-30°F - 100°F	1-spdt snap switch	1.1°C	$841.00
T631C1020	70°F - 140°F	1-spdt snap switch	1.7°C	$853.00

T6031A Refrigeration Temperature Controllers

Wide range controller used in applications where remote mounting of sensing element is required. Controls temperature in duct, tank, freezer or cooler. Max. Ambient Operating Temperature: 52°C (125°F)



Contact Ratings (1/3 hp):

	120 Vac		240 Vac	
	R-B	R-W[1]	R-B	R-W[1]
Full Load	8.0A	16.0A	5.1A	8.0A
Locked Rotor	48.0A	80.0A	30.6A	40.0A
Pilot Duty				125 VA

[1] Maximum temperature at element: 54°C (130°F)

Model #	Range		Switching	Differential		Capillary Length		LIST
	C	F		C	F	m	ft	
T6031A1219	-35 to +30	-30 to +90	SPDT switch makes R to W on temperature rise; R to B on temperature fall	Adjustable 1.9 to 8	Adjustable 3.5 to 16	2.4	8	$518.00
T6031A1235	-35 to +30	-30 to +90				6.1	20	$763.00

HEATING - AIR VENTS

EA122A1002 Automatic Air Vent for Heating System Applications

Purges air trapped in closed hot or cold water systems

- Maintains quiet and efficient operation
- Built-in brass shutoff valve for servicing without system shutdown
- Built-in vacuum breaker
- Leakage guard safeguards operation
- Includes removeable float/valve assembly for easy servicing
- Not for use in steam systems
- Body, cover and float assembly made of thermoplastics
- Internal parts made of corrosion-resistant and chemical-resistant materials for use with water systems containing propylene glycol, mineral oils or petroleum-based oils
- Oil resistant seal



Part #	Description	Connections	LIST
EA122A1002	Automatic air vent with built-in shutoff valve & leakage guard	1/8 in. male, threaded	$94.00
EA122B117-HON	Auto air vent w/o shut off	1/8 in. male, threaded	$72.30

LINE VOLTAGE THERMOSTATS
HONEYWELL

T675A,B; T678A Controllers

Remote bulb, temperature compensated thermostats regulate temperature of air or liquids in ducts, pipes, tanks and boilers.

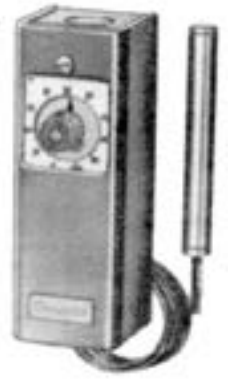

Electrical Ratings (1/3 hp):

	120 Vac	240 Vac
Full Load	8.0A	5.1A
Locked Rotor	48.0A	30.6A

T675A - nonadjustable differential models 125 VA at 120/208/240 Vac.
T675B - 125 VA at 240 Vac pilot duty
T678A - Maximum connected load: 2000 VA

Switching:
T675A - SPDT switch breaks R-B and makes R-W at setpoint on temperature rise
T675B - SPST switch breaks at setpoint on a temperature fall
T678A - 2 SPDT switches operate in sequence. Right switch breaks R-B and makes R-W at setpoint on a temperature rise; left switch breaks R-B and makes R-W if temperature continues to rise through interstage differential.

Model	Control Range		Capillary Length and Material	Max.Temp.		Differential		LIST
	C	F		C	F	C	F	
T675A1524	13 to 79	55 to 175	6.1m (20 ft) copper	93	200	0.6 fixed		$833.00
T675A2068	-15 to +35	5 to 95	1.5 (5 ft) copper	52	125	1.7 to 5.6 adj.		$1,159.00
T675A2084	-15 to +35	5 to 95	6.1 m (20 ft) copper	52	125	adjustable		$1,303.00
T678A1155	-15 to +35	5 to 95	1.5 (5 ft) copper	52	125	Each switch fixed at 1.7°C (3°F). Adjustable differential between switches 1.7°C to 5.6°C (3°F to 10°F)		$1,368.00
T678A1163*	-15 to +35	5 to 95	6.1 m (20 ft) copper	52	125			$959.00
T775B2032	75 to 125	167 to 250	1.5 (5 ft) copper	138	280			
T678A1478	-18 to +38	0 to 100	Fast response capillary tube	52	125			$1,118.00

**Now With 2 Relays*

LINE VOLTAGE THERMOSTATS

HONEYWELL

T6051 & T6052 Heavy Duty Line Voltage Thermostats

Heavy duty line voltage thermostats are used to control fan coils, fans, motor starters, valves, contactors, and circulator motors in heating and / or cooling systems.
Add Q651A,B Subbases to provide system and fan switching at the thermostat location. The set point knob is removable to lock set point and prevent tampering. With locking cover.



PROPORTIONAL TEMPERATURE CONTROLS

HONEYWELL

T991A Proportional Temperature Controllers



For modulating control of water or air temperature in ducts, tanks, and similar applications.

Model #	Setpoint		Capillary Length and Material	Adj. Throttling		Bulb (in.)	Pot. Res. (ohms)	LIST
	F	C		F	C			
T991A1012	0 to 100	-18 to +38	6.1m (20 ft) copper	3.0 to 30.0	1.7 to 16.7	1/2 x 4-3/16	135	$2,088.00
T991A1061	160 to 260	71 to 127	1.5m (5 ft) copper	3.0 to 30.0	1.7 to 16.7	1/2 x 4-3/16	135	$2,028.00
T991A1194	55 to 175	13 to 79	6.1m (20 ft) copper	3.5 to 36.0	1.9 to 20.0	1/2 x 3-9/16	135	$2,187.00
T991A1244*	55 to 175	13 to 79	1.5 m (5 ft) copper	3.5 to 36.0	1.9 to 20.0	1/2 x 3-9/16	135	$1,855.00
T991A1350	55 to 175	13 to 79	6.1 m (20 ft) copper	3.5 to 36.0	1.9 to 20.0	Averaging	135	$1,414.00
T991A1426*	0 to 100	-18 to +38	1.5 m (5 ft) copper	3.0 to 30.0	1.7 to 16.7	1/2 x 4-3/16	135	$1,855.00
T991A1756**	55 to 175	13 to 79	1.5 m (5 ft) copper	3.5 to 36.0	1.0 to 20.0	Fast response	135	$1,283.00
T991A1764	0 to 100	-18 to +38	7.3 m (24 ft) copper	3.5 to 36.0	1.0 to 20.0	Averaging	135	$2,076.00

* Includes 311266D Duct Bulb Holder
** Includes 131524A Duct Coil Holder

AQUASTAT CONTROLLERS

HONEYWELL

L4006A,B,E; L6006A,B,C Aquastat Controllers



Immersion type controllers for limiting or regulating temperatures of liquids in boilers or tanks.

Electrical Ratings (A):

Models with 1.1°C (2°F) Fixed Differential:

	120 Vac	240 Vac
Full Load	2.6	1.3
Locked Rotor	15.6	7.8

Models with 2.8°C (5°F) Differential:

	120 Vac	240 Vac
Full Load	8.0	5.1
Locked Rotor	48.0	30.6
Millivoltage	0.25 at 1/4 to 12 Vdc	

Model #	Temperature Range		Application	Midscale Differential		Includes	LIST
	F	C		F	C		
L4006A1017	100 to 240	38 to 116	High or low limit	5 to 30 adj.	2.8 to 16.7 adj.	1-1/2 in. insulation, stop factory set at 240°F immersion well	$634.00
L4006A1678	100 to 240	38 to 116	High or low limit	5 to 30 adj.	2.8 to 16.7 adj.	2-7/8 in. sensing bulb, stop factory-set at 240°F less immersion well	$467.00
L4006A1959	40 to 180	4 to 82	High or low limit	2 fixed	1.1 fixed	2-78 in. sensing bulb,with well adapter, heat-cond.compound. Horizontal or Vertical Mount	$466.00
L4006E1042	110 to 290	43 to 143	High limit	manual reset	manual reset	2-7/8 in. sensing bulb, stop factory-set at (240°F). Horizontal or vertical mount	$703.00
L6006A1145	100 to 240	38 to 116	Circ.& high or low limit	5 to 30 adj.	2.8 to 16.7 adj.	2-7/8 in. insulation, stop factory-set at 240°F. With well adapter, heat-cond. compound. Horizontal or vertical mount.	$491.00
L6006C1034	65 to 200	18 to 93	Circ., high & low limit	5 to 30adj.	2.8 to 16.7 adj.	Bracket for strap on mounting, stop factory-set at 200°F	$435.00

L4008A,B,E; L6008 Remote Bulb Controllers



Hydronic controllers for limiting or regulating temperatures of boiler water or liquid in tanks.
Can also sense duct or outside air temperature.

Model #	Temperature Range		Application	Midscale Differential		Switch Action	LIST
	F	C		F	C		
L4008A1015	100 to 240	38 to 116	High or low limit	5 to 30 adj.	2.8 to 16.7 adj.	Contacts break on temp. rise	$500.00
L4008B1013	100 to 240	38 to 116	Circulator	5 to 30 adj.	2.8 to 16.7 adj.	Contacts make on temp. rise	$544.00
L4008E1040	110 to 270	43 to 143	High Limit	manual reset	manual reset	Contacts break on temp. rise	$430.00

L4064B,D,L,R,W Fan and Limit Controllers; L6064A 2-Speed Fan and Limit Controllers



For control of high limit and fan motor in all types of forced air heating systems

- Three wiring terminal options available for easy installation:
  - push in receptacles for stripped wire
  - female receptacles for 1/4 in. male flag connectors
  - field add-on screw terminals
- Controls adapt to many competitive mounting holes in replacement applications
- Available in a variety of fan and high limit setting ranges
- L4064B, W models have manual fan switch that overrides fan control to keep fan running continuously

Accessories:

110265A Rigid Bracket. Single wing, with No. 8-32 setscrew

Pilot Duty: 2A at 24 Vac; 0.25A at 0.25 to 12 Vdc

Max Combined Connected Load: 2000Va

Electrical Ratings (A):

	120 Vac		240 Vac	
	Fan	Limit	Fan	Limit
Full Load	14	8	7	4
Locked Rotor	84	48	42	24

Model	Application	Insertion Element		Mounting	LIST
		in.	mm		
L4064B2228-RES	Controls high limit and fan motors in forced air heating systems.	5	127	Surface or universal mounting bracket available (50077438-001/U)	$462.00
L4064B2210-RES	Controls high limit and fan motors in forced air heating systems.	11 1/2	292	Surface or universal mounting bracket available (50077438-001/U)	$480.00
S1-L4064W1106-UPG	For control of high limit and fan motor in all types of forced air heating systems.	11 1/2	292	Surface: Rigid bracket	

HUMIDITY CONTROLLERS
HONEYWELL

H600A Humidity Controller



Operates humidification equipment on RH fall or dehumidification equipment on RH rise.

- Sensing element of thin, moisture sensitive nylon ribbon provides reliable operation even when ambient temperature conditions change
- Fully enclosed, dust free, spdt, snap-acting switch
- Removable setting knob prevents tampering
- Mount vertically on 2 x 4 in. junction box (not to be duct mounted)
- Includes alternate scale and faceplate for horizontal mounting

Operating Temperature Range: 50°F to 125°F (10°C to 52°C)

Electrical Ratings (amperes):

	Dehumidifier (Red to Yellow)		Humidifier (Red to Blue)	
	120 Vac	240 Vac	120 Vac	240 Vac
Full Load	7.5	3.8	4.4	2.2
Locked Rotor	30.0	15.0	26.4	13.2
Resistive	12.0	6.0	12.0	6.0

Model	Range (percent RH)	Fixed Differential	Colour	LIST
H600A1014	20 to 80	5 percent RH	Beige	$605.00

H705A Solid State Enthalpy Controller

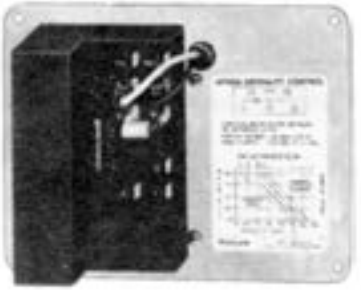

Provides solid state enthalpy changeover control in economizer systems

- Maximizes the use of outdoor air for free cooling for electronic and electromechanical systems
- Mounts in any position in outdoor air duct
- Allows use of enthalpy setpoint to select desired combination of air temperature and humidity
- Humidity sensor element is solid state
- Thermistor temperature sensing element

Operating Ambient Temperature: -25°F to +125°F (-32°C to +52°C)

Model	Description	LIST
HH680014-OEM	Carrier HH680014 Enthalpy Control	

TRANSFORMERS
HONEYWELL

AT20 Transformer



Power a 24V control system; for spud mounting to any electrical junction box.

Model Number	Output (100 percent power factor)	Primary Voltage (50/60 Hz)	Secondary Voltage (open circuit)	LIST
AT20B1056	20 VA	120V	28	$82.80

AT72D NEMA Standard Transformer



24V control circuit step-down transformer designed to power any 24V control system, including thermostats, gas valves and relays.

Can be foot mounted; plate mounted on 4 x 4 in., 4 in. octagon, or 2 x 4 in. electrical boxes (transformer all above plate or 3/4 above plate); or clamp mounted via a junction box knockout

Model Number	Output (100 percent power factor)	Primary Voltage (50/60 Hz)	Secondary Voltage (open circuit)	LIST
AT72D1725	40 VA	120	26.5	$96.30
AT72D1733	40 VA	208/240	26.5	$107.40

AT120A; AT140A; AT175A General Purpose Transformers

Provide power to 24 Vac circuits in heating/cooling control systems. Intended for use in systems with predictable, uniform loads. Can be used in any application that does not exceed the listed ratings.

Foot mounted, plate mounted on 2 x 4 in. or 4 x 4 in. outlet box, clamp mounted using outlet box knockout, or panel mounted.



Model Number	Output (100 percent power factor)	Primary Voltage (50/60 Hz)	Secondary Voltage (open circuit)	LIST
AT120A1004	20 VA	120/208/240	27.0	$71.10
AT175A1008	75 VA	120/208/240	27.5	$165.20

TRANSFORMERS

Multi-Mount Transformers

- Optional 3-way mounting for maximum flexibility

Model	VA	Primary VAC	Secondary VAC	LIST
4011M	40	120	24	$107.90
4031M	40	120/208/240	24	$121.70
5031M	50	120/208/240	24	$149.50
5032M	50	120/208/240	2.5/12/24	$2,426.00



Power Transformers

Foot mount, wire leads

Model	VA	Primary VAC	Secondary VAC	LIST
5024P	50	208/240	120/24	$252.00
7524P	75	208/240	120/24	$274.00
10048PC-MAR	100	120/240/480	120/24	$426.00
10048STPC	100	208/277/575	120	$444.00

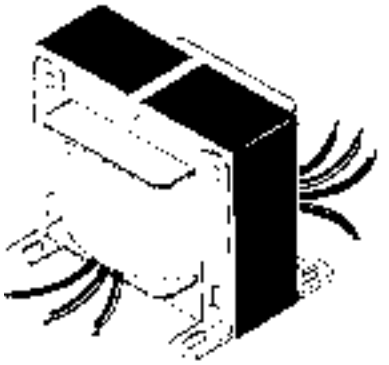

Foot Mount Transformers

Open Construction, wire leads

Model	VA	Primary VAC	Secondary VAC	LIST
2031F	20	120/208/240	24	$62.80
4011F	40	120	24	$92.00
4031F	40	120/208/240	24	$76.00
4032F	40	120/208/240	2.5/12/24	$111.30
7531F	75	208/240	24	$146.40

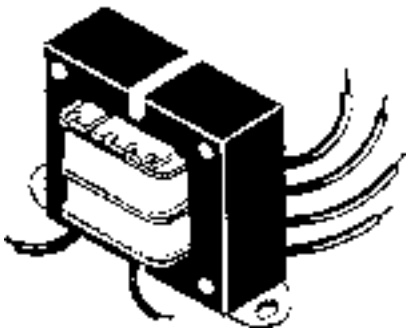

Closed construction with circuit breaker

Model	VA	Primary VAC	Secondary VAC	LIST
5041C	50	120/208/240/480	24	$204.30
6041C	60	120/208/240/480	24	$216.70
7541C	75	120/208/240/480	24	$307.00
7541STC	75	120/277/380/575	24	$329.00
10041C	100	120/208/240/480	24	$444.00

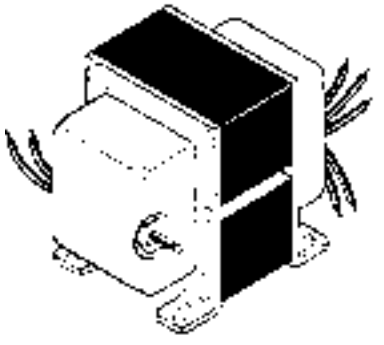

RELAYS

HONEYWELL

R4222, R8222 General Purpose and R4228, R8228 Heavy Duty Switching Relays

Honeywell's switching relays are available in multiple configurations for various applications. For whatever you need — general purpose relays or electric heat relays — Honeywell has you covered.

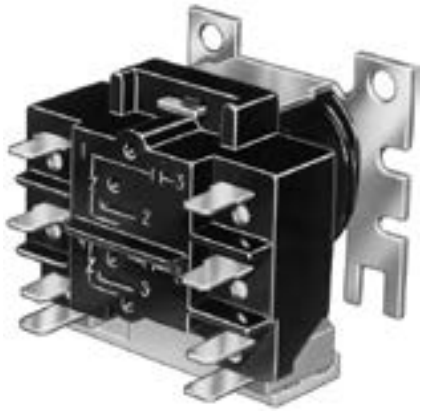

Provide general purpose and heavy duty switching for refrigeration and air conditioning equipment, appliances, vending machines and similar applications.

Ambient Temperature Range: -20°F to +155°F (-29°C to +68°C)
Accessories:

129384A Case and Cover Assembly
135887 Wire Bail only
135959 Receptacle only
137881A Adapters for converting 1/4 in. quick-connects to No. 6 screw terminals (bag of 8)
4074BVJ Receptacle with 8 colour-coded plug-in leadwires and retaining bail, for panel mounting applications
4074EAK Receptacle with 6 plug-in leadwires and retaining bail
Q633A1007 4 x 4 in. plate-mounted relay receptacle with metal relay cover and 8 colour-coded plug-in leadwires

Contact Ratings: Power Poles (Amps per pole)

R4222, R8222	120 Vac	208/240/277 Vac	480 Vac
Full Load	12	6	3
Locked Rotor	60	35	18
Resistive - A and C models	20.8	20.8	10
- All Others	15	15	10
Horsepower	1/2 hp	1/2 hp	1/2 hp

R4228A,B; R8228A,B	120 Vac		208/240 Vac	277 Vac	480 Vac
Full Load	16	18	18	12	5
Locked Rotor	96	72	72	72	30
Resistive [1]	18		25	25	15
Horsepower	1 hp		2 hp	2 hp	1.5 hp

[1] Also rated 10A resistive at 600V

Pilot Duty Poles for R4222 and R8222 only:
Minimum - 3 VA at 24, 120 and 480 Vac
Maximum - 25 VA at 24 Vac, 125 VA at 120, 240 and 480 Vac
Resistive - 3A at 277 Vac (0.75 power factor)

Millivoltage for R4222 and R8222 only; normally open pilot duty contacts are rated for millivoltage (Powerpile) applications - 0.25A at 0.25 to 12 Vdc

R4228D; R8228D	Combined Load
120 V	20.8A Res. (2.5 kW) + 6.4 AFL
208 / 240 / 277V	20.8A Res. (5 kW) + 6.4 AFL
480 V	10.4A Res. (5 kW) + 3.2 AFL
600 V	10A Resistive Only

Model #	Switching	Coil Voltage (50/60 Hz)	Pole 1-2-3	Pole 4-5-6	LIST
R8222 / R4222 General Purpose Relays					
R8222B1067	Spdt	24	Power	None	$66.90
R8222D1014	Dpdt	24	Power	Power	$71.60
R8222N1011	Dpdt	24	Pilot Duty	Pilot Duty	$75.70
R8222V1003	Dpdt	24	Power	Pilot Duty	$80.80
R4222D1013	Dpdt	120	Power	Power	$77.10
R4222D1021	Dpdt	208/240	Power	Power	$80.50
R4222N1002	Dpdt	120	Pilot Duty	Pilot Duty	$116.70
R8228 / R4228 Heavy Duty Switching Relays					
R8228B1012	Spdt	24	Power	Power	$119.00

[1] Rating - 25A Resistive

FAN RELAY CENTERS

HONEYWELL



R8285 Control Centre

Provides low voltage control of line voltage fan motors and auxiliary circuits in heating, cooling or air conditioning systems.

Voltage	120 Vac	240 Vac
Full Load	12	6
Locked Rotor	72	35

Model #	Switching	Configuration & Colour Coding	Primary Voltage	Application	LIST
R8285A1048	SPDT		120V	For Single or Two Speed Fan	$144.50



90-113 Fan Control Centers

One package transformer and relay combination. Rugged controls for remote mounting. Incorporate the recently developed over/under bobbin wound energy-limiting class 2 transformer and fan relay on a common plate for mounting on a standard four inch junction box.

Model #	Switching	Connections	Primary Voltage	Application	LIST
90-113	SPDT	Colour coded leads, pre-stripped	120 V	For use in remote control circuits. Furnace & A/C, operation of relays, contactors & solenoids, temperature indicating and regulation equipment	-

GAS BURNER CONTROLS
HONEYWELL

Gas Pilot Safety Systems

Pilot burners, thermocouples, thermopiles and accessories in the various combinations shown below make a complete pilot burner generator.

PILOT BURNERS

Q314A With natural gas orifice and optional LP gas orifice. Universal mounting bracket



Q327 With natural gas and optional LP gas orifice



USE WITH

THERMOPILES

Q313 750 mV for universal push-in or screw-in mounting

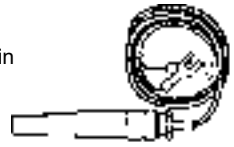

AND

Q340 OR Q390 THERMOCOUPLES

392451 ECO connector for V800



393200-1 ECO connector for VR8200 and VR8300 controls



Q340A Universal 30 mV Thermocouples

- Add the 392451-1 or 393200-1 ECO Adapter to hook up a high limit switch in series with the thermocouple
- Available in a variety of lead lengths - 18 to 48 in. (0.5 to 1.5m)

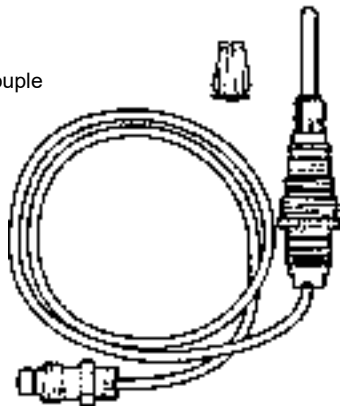

Model	Lead Length		LIST
	in.	m	
Q340A1066/U-RES	18	0.5	$35.10
Q340A1074/U-RES	24	0.6	$36.60
Q340A1082/U-RES	30	0.8	$38.70
Q340A1090/U-RES	36	0.9	$40.10
Q340A1108/U-RES	48	1.2	$44.40

PILOT BURNER TUBING

Part	Description	LIST
1/4-AL	Bulk 1/4" aluminum tubing	$3.60
Y99AR-1H	1/4" x 60" pilot tube kit c/w four 1/4" fittings	$75.30
11-291	1/8" x 60" pilot tube kit c/w four 1/4" fittings	$43.60
11-293	1/4" x 60" pilot tube kit c/w four 1/4" fittings	$40.50

GAS BURNER CONTROLS

HONEYWELL

Q313A,B Replacement Thermopile Generators

Provide power for a millivoltage, self-powered control system.

Model	Open Circuit Output (mV)	Includes	Use With	LIST
Q313A1402-RES	600-750	35 in. leads	Q314, Q324, Q327	$217.30
Q313A1055-RES		47 in. (1194 mm), 1/2 in. thermopile attaching nut		$248.80
Q313A1188-RES		35 in. (889 mm), push-in clip, 1/2 in. thermopile attaching nut		$214.70
Q313B1005-RES		35 in. (889 mm), terminal block		$287.70

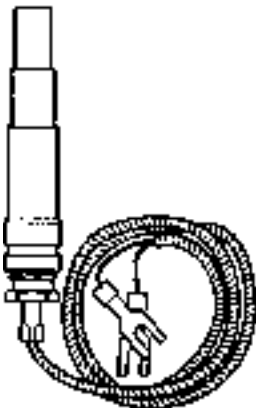

Q327A Pilot Burner

Primary-aerated, spud orifice type pilot burner for main burner ignition with Q340 or Q390 thermocouple for pilotstat safety control operation.

- Use with Q313 thermopile generator for 750 mV Powerpile applications.

Target Span: 1 in. (25 mm)

Model	Tip Style	Type of Gas	Mounting Bracket	Includes	LIST
Q327A1626-RES	Thermocouple  Main burner ignition flame 1 in. (25 mm) span	Natural, LP	B	Natural gas orifice; LP gas orifice; 1/4 in. cc inlet fitting	$169.90



Q314A Pilot Burner

Nonprimary-aerated, insert orifice type pilot burner for main burner ignition with Q340 or Q390 thermocouple for Pilotstat safety control operation.

- Use with Q313 thermopile generator for 750 mV Powerpile applications.

Model	Tip Style[1]	Type of Gas	Mounting Bracket	Includes	LIST
Q314A4586-RES		Natural, LP	B	Natural gas orifice; LP gas orifice; 1/4 in. cc inlet fitting; special mounting bracket with screws for converting "B" bracket to "A"	$145.90
Q314A6094-RES		Natural, LP	B		$145.90
Q314A6102-RES		Natural, LP	B		$146.70

[1] ● denotes thermocouple



GAS BURNER CONTROLS
HONEYWELL

VR8245, VR8300, VR8304 Dual Intermittent Pilot Gas Control



VR8300A



VR8245M

Part #	Description	LIST
VR8245M2530-RES	24 Vac Dual Intermittent Pilot Gas Valve with 1/2 in. x 1/2 in. inlet/outlet, standard opening and 3.5 in. wc pressure regulator setting	$483.00
VR8300A4508-RES	24 Vac Dual Standing Pilot Gas Valve with 3/4 in. x 3/4 in. inlet\outlet, standard opening and 3.5 in. wc pressure regulator setting	$536.00
VR8304H4503-RES	24 Vac Dual Intermittent Pilot, Slow Opening Gas Valve with 3/4 in. x 3/4 in. inlet/oulet, slow opening and 3.5 in. wc pressure regulator setting	$828.00
VR8304M4515-RES	24 Vac Dual Intermittent Pilot, Slow Opening Gas Valve with 3/4 in. x 3/4 in. inlet/oulet, standard opening and 3.5 in. wc pressure regulator setting	$892.00
VR8304P4504-RES	24 Vac Dual Intermittent Pilot, Slow Opening Gas Valve with 3/4 in. x 3/4 in. inlet/oulet, step opening and Full Rate: 3.5 in. wc; Step Setting: 0.9 in. wc pressure regulator setting	$869.00

VS820A, C Millivoltage Combination Gas Controls

Application / Description:

V800A1179/V800C1052: Automatic 24V control. Use with 30 mV thermocouple / colour coded blue to identify 24V operation. Terminal block has 3 combination screw and 1/4 in. quick connect terminals. Current draw: 0.2A
VS820A1054: Self powered automatic control. Use with 750 mV pilot generator / colour coded red to identify power-pile operation. Red pigtail power unit lead. Terminal block has 3 combination screw and 1/4 in. quick connect terminals.

[1] 1000 Btu/ft³, 0364 sp gr natural gas at 1 in. wc p.d. (37.3 MJ/m³, 0.64 sp gr natural gas at 0.25 kPa p.d.)
[2] Use of reducer bushings resulting in 3/4 x 1/2 in. inlet-outlet size reduces capacity to 250 cfh (7.1 m³/hr); use of reducer bushings resulting in 1/2 x 3/8 in. inlet-outlet size reduces capacity to 110 cfh (3.1 m³/hr.)
[3] Step pressure is not adjustable
* Includes Q340 thermocouple with adapters

GAS BURNER CONTROLS

HONEYWELL

VR8200 Continuous Pilot Dual Automatic Valve Combination Gas Controls



Combination gas controls for use in 24 Vac, gas-fired, standing pilot appliances with capacities from 20 to 200 cfh.

VR8200 controls replace the following Honeywell and competitive combination gas controls for applications requiring a minimum capacity of 20 cfh and a maximum capacity of 200 cfh.

- Honeywell V800A and VR800A models
- White Rodgers 36C03/01 series
- Robertshaw 7000BER (700-400) and 7200BER (720-400) series
- ITT B57 and B59 series
- Essex SX242N

Model	Inlet-Outlet size (in.)	A.G.A. Certified Capacity[1]		Pressure Regulator Setting		Type of Gas	Type of Pressure Regulator	LIST
		cfh	m^3/r	in. wc	kPa			
VR8200A2322-RES	1/2 x 1/2	130	3.7	3.5	0.87	Nat.	Standard	$537.00
VR8200A2124-RES	24 Vac Dual Standing Pilot Gas Valve with 1/2 in. x 1/2 in. inlet\outlet, standard opening and 3.5 in. wc pressure regulator setting							$461.00

VR8345M Universal Electronic Ignition Combination Gas Control



Universal electronic ignition combination gas control for use with direct spark ignition, hot surface ignition or intermittent pilot ignition in 24 Vac, gas-fired appliances, with capacities from 30 to 415 cfh.

Model	Inlet-Outlet size (in.)	A.G.A. Certified Capacity		Pressure Regulator Setting		Type of Gas	Type of Pressure Regulator	Includes	LIST
		cfh	m^3/r	in. wc	kPa				
VR8345M4302-RES	3/4 x 3/4	300	8.5	3.5	0.9	Nat.	Standard	Two 3/4 x 1/2 in. NPT bushings and one 1/2 x 3/8 in. bushing	$516.00

GAS BURNER CONTROLS
HONEYWELL

S8610U Universal Intermittent Pilot Module

Field service replacement for most Honeywell, Robertshaw, Johnson, and UTEC (HSC) intermittent pilot ignition modules. Provides electronic control of most intermittent pilot ignition systems used on gas-fired furnaces, boilers and other heating appliances.

Model Number	Max. Shutoff Time (sec.)	Features	LIST
S8610U3009-RES	90	100 percent pilot gas shutoff and lockout on loss of pilot flame. Includes remote reset, and automatic vent damper plug. For use in systems with combination igniter-sensor (single rod or sense) or separate igniter and sensor (dual rod or remote sense)	$460.00



S8910U Universal Hot Surface Ignition Module

Provides operating control of a direct ignition system using a 120 Vac hot surface igniter.

The S8910U can only be used for direct replacement.

Ambient Temperature Range: -40°F to +175°F (-40°C to +79°C)
Hot Surface Igniter or Igniter-Sensor: Norton Model 201 or 271 or equivalent
Sensor: Separate sensor required for remote sense applications

Electrical Ratings:
- IMPORTANT: The S8910U is for use only in 60 Hz systems
- Control Voltage: 24V, 60 Hz
- Maximum Valve Contact Rating: 2A
- Current Draw: 0.4A plus valve load
- Hot Surface Igniter Voltage: 120 Vac, 60 Hz
- Contact Rating at 120 Vac: 5A



Model #	Application	LIST
S8910U1000-RES	For direct replacement of a wide range of hot surface ignition modules manufactured by Honeywell, White Rodgers, and Robertshaw. Refer to the product specification sheet and the cross reference for specific models that can be replaced by the S8910U	$357.00

FLAME SAFEGUARD CONTROLS

HONEYWELL



RA890F Protector Relay Primary Control

Non-programming primary control provides solid state, electronic, flame safeguard protection for industrial and commercial single or dual fuel burners.

Model #	Voltage	Safety Switch Timing (sec)	Flame Failure Response Time (sec)	SPDT Alarm Contacts	LIST
RA890F1288	120	15	3.0	Yes	$6,208.00

C7500A,B Flame Rectifier Pilots

Combination rectification flame rod and pilot burner for use with suitable electronic relay on industrial or commercial gas or gas pilot-ignited oil burners.

C7027A Minipeeper Ultraviolet Flame Detector



Compact flame detector for use with RA890G, R7023C R4795, R4126, R4127, R4075, R4138, R4150, and R4140 Flame Safeguard Controls with ultraviolet amplifiers

Model #	Ambient Temperature Range		Lead Length		LIST
	C	F	m	ft	
C7027A1023-OEM	-18 to +102	0 to +215	1.8	6	$930.00
C7027A1031-OEM	-40 to +102	-40 to +215	1.8	6	$1,026.00
C7027A1049-OEM	-18 to +102	0 to +215	1.8	6	$893.00
C7027A1064	-40 to +102	-40 to +215	7.3	24	

Q179A,B Flame Recitifier Gas Pilots



Combination rectifying flame rod and pilot burner for use with suitable electronic relay on indutrial or commercial gas burners or gas-pilot-ignited oil burners.

Model #	Application	Tip Style	LIST
Q179B1042-HON	For continuous (standing) pilot. Has flame electrode only.	T	$1,078.00

MOTORIZED VALVES
HONEYWELL

Glowfly™ Universal 120Vac Hot Surface Igniter



The Igniter Kit is designed to provide a robust field service replacement igniter, in gas fired appliances with Norton / St. Gobain / CoorsTek 120 Vac, silicon carbide, hot surface igniters.

- Replaces over 110 OEM igniter models
- Each igniter package includes cross reference instructions, six brackets, and installation accessories.
- Robust Silicon nitride igniter construction
- Remote flame sense appliance applications only
- High temperature ceramic wire nuts
- Multiple brackets to adapt as field replacement of Norton / St. Gobain / CoorsTek silicon carbide igniters
- Lead Wire Maximum - 250 C
- 120 Vac
- Lead wire Length - 15 in.

Part #	LIST
Q3200U1004	$121.90

Igniter Flame Rod Assembly



- 250° C (484° F)
- Flame Rod Assembly
- Field replacement for Q3450, Q3480 hot surface pilot burner
- Flame Rod Tip: 982 C; Igniter Insulator: 485 C; Flame Rod Insulator: 677 C; Flame Rod Lead: 250 C
- Ignition Wire--30 in.

Part #	LIST
Q3400A1024	$245.90

V8043, V8044 Motorized Valves



On-Off and diverting valves consist of an actuator motor and valve assembly for controlling the flow of hot or cold water, and some models for steam.

Manual opener (on all except straight-through, normally open valves) for valve operation on power failure. Valve returns to automatic position when power is restored. Motor actuator may be replaced without removing the valve body or draining the system. Moisture sealed motor on all diverting and normally open valves.

Model #	De-Energized Position	1/16" End Switch	Bypass Hole	Pipe Connections / Remarks	LIST
V8043D1080-RES	Open	No	No	1/2" OD flare with 2 flare to sweat	$393.00
V8043D1205-RES	Open	No	No	1/2" inverted flare - order fittings separately	$342.00
V8043G1018-RES	Closed	Yes	No	3/4" sweat	$340.00
V8043A1011/U-RES	Closed	No	No	-	$332.00
V8043A1029	Closed	No	No	-	
V8043J1037-RES	Open	No	No	-	$434.00

MOTORS AND ACTUATORS

HONEYWELL

M436A, M836A,B Damper Motors

Spring return motors for 2-position zone or damper control



Model #	Application Description	Voltage (60 Hz)	Nominal Opening Current (A)	Nominal Opening Time (sec)	Max. Load Torque		Break-Away Torque[1]		Break-Away Torque		LIST
					N-m	lb - in	N-m	lb - in	m²	sq. ft.	
M436A1116-HON	Use with 2-wire thermostats or other SPST controllers. With thermal breaker for overload protection during the lifting stroke or if motor stalls	120	0.37	30	2.3	20	3.4	30	1.2	13	
M436A1124-HON		240	0.19	30	2.3	20	3.4	30	1.2	13	

[1] Maximum torque available to overcome large loads such as seized damper or valve. MUST NOT BE USED CONTINUOUSLY AT THIS RATING

M7415A, M7415B, M8405A, M8415A, Damper Actuators



Spring-return, 24 Vac damper actuators provide two-position, three-position or modulating control of economizer systems, ventilation dampers and combustion air dampers.

Model #	Power VA	Timing (sec)	Stroke (deg)	Application	LIST
M7415A1006	8	90	90	Modulating, spring-return, rotate to open counter-clockwise	$1,341.00
M7415B1004	8	90	90	Modulating, spring-return, rotate to open clockwise	$1,341.00
M8405A1006	7	90	90	3-position, with adjustable minimum position control	$1,348.00
M8415A1004	7	90	90	2-position, with adjustable auxiliary switch	$1,650.00

Q769 Adapters



Used with M7405 and M7415 Actuators to allow operation from a 6 to 9 Vdc, 4 to 20 mA, 0 to 10 Vdc, or 2 to 10 Vdc input signal. Mounts directly to actuator with quick connect terminals.

Model #	Electrical Ratings, Power Supply	Inputs	LIST
Q769A1009	25 mW at Vdc input, maximum voltage is ±25 Vdc	6 to 9 Vdc	$156.10
Q769C1007		0 to 10 Vdc or 2 to 10 Vdc (adj)	$307.00

M9184D, M9194D Modutrol IV Motors

Reversing, proportional motors used to operate dampers and valves

Model #	Voltage (50/60 Hz)	Power		Torque		Timing (sec)	Stroke (deg)	Includes	LIST
		W	VA	lb-in	N-m				
M9184D4009	24	18	19	150	17.0	30 to 60	90 to 160		$2,788.00
M9184E4006	24	18	19	150	17.0	30 to 60	90 to 160	2 spdt auxiliary switches	$3,102.00
M9194D1003	24	18	19	300	34.0	120 to 240	90 to 160	Dual shaft	$6,279.00

MOTORS AND ACTUATORS

HONEYWELL

M9175D; M9185D,E; M9186G Modutrol IV Motors

Reversing, proportional spring-return motors used to operate dampers and valves.



Auxiliary Switch Ratings (A):

One Contact[1]	120 V	240 V
Full Load	7.2	3.6
Locked Rotor	43.2	21.6

[1] 40 VA pilot duty, 120/240 Vac on opposite contact

Model #	Voltage[1] (50/60 Hz)	Power		Torque		Timing[3] (sec)	Stroke (deg)	Includes	LIST
		W	VA	lb-in	N-m				
M9185D4008	24	23	24	60	5.7	60	160		$3,799.00

[1] Internal actuator motor and circuitry operate from 24 Vac. Line voltage models shipped with internal transformers
[2] M9186G drives to full open position when powered with control wiring not connected
[3] Shorter timing applies to 90 degree stroke

DAMPERS

Q605A,B,D,E Damper Linkages

Linkages include ball joints, motor crank arm, and 1/2 in. (13 mm) damper arm. Adjustable to any degree of damper opening.

Accessory:
191385 Internal Motor Mounting Kit. Must be used when Q605B is used with non-TRADELINE dampers.



Push Rod Linkage	Length (in)	LIST
A27520G-HON	24	$62.30

Parts & Accessories	Description	Description	List
26026G-HON	Damper crank arm for 1/2 in. shaft. Elongated slot	For Q605	$138.00
27518-HON Skin pk.	Ball joint assembly for 5/16 in. pushrod connection to duct damper linkage assembly or damper motor crank arm. Mount with 1/4-28 x 5/16 in. stud, lockwasher and nut	Damper, damper linkages	$62.80
7616BR-HON	Motor crank arm		$92.80

HONEYWELL



ML6161, ML7161 Direct Coupled, Non-spring Return Damper Actuators

Used to control dampers in applications such as variable air volume (VAV) terminal units.
Complete with declutch 24Vac and 45, 60 and 90° stroke

Model #	Torque lb - in.	Timing[1]	Control Input	Application	LIST
ML6161A2009	35	90 sec	SPDT floating & two-position	Pressure Dependent	$812.00

[1] Timing shown is for 90 degree stroke

EASY-TO-SELECT MODEL NUMBERS MS and MN Families



Spring Return, Low Torque



Spring Return, High Torque



Non-Spring Return, Low Torque



Non-Spring Return, High Torque

MS 75 10 A 2 2 XX

Fail Safe Mode
- **MS** Spring Return
- **MN** Non-Spring Return

Input Signal Type
- **41** Two-Position, 100-250 Vac
- **61** Floating, 24 Vac/dc
- **75** Modulating/Floating, 24 Vac/dc
- **81** Two-Position, 24 Vac/dc

Torque
- **03** Nm = 27 in-lb
- **05** Nm = 44 in-lb
- **10** Nm = 88 in-lb
- **20** Nm = 175 in-lb
- **34** Nm = 300 in-lb

System Controlled Numbers

Auxiliary Switches
- **0** No Internal Switches
- **2** Two Internal Switches

Feedback
- **1** No Feedback
- **2** Voltage Feedback

Application Type
- **A** Standard Model
- **H** Enhanced Model
- **W** Model with Whips Cable

ML Family

ML 61 61 B 2 XXX

Fail Safe Mode
- **ML** Non-Spring Return

Input Signal Type
- **61** Floating, 24 Vac
- **71** Modulating, 24 Vac

Torque
- **61** (4 Nm) = 35 in-lb
- **74** (8 Nm) = 70 in-lb

System Controlled Numbers

Declutch
- **1** Standard
- **2** Includes Declutch Function

Feedback & Conduit
- **A** Feedback w/Accessory
- **B** Standard
- **C** Feedback w/Accessory and Cover w/Conduit Connections
- **D** Cover w/Conduit Connections



Foot Mounting Kit
50001194-001

SPRING RETURN ACTUATORS

BELIMO

Standard Spring Return Damper Actuator Product Range



EF Series
270 in-lbs [30 Nm]
Approx. 66 sq. ft.



AFB Series
180 in-lbs [20 Nm]
Approx. 45 sq. ft.



NFB Series
90 in-lbs [10 Nm]
Approx. 22 sq. ft.

	Running Time(s)		Power Supply				Power Consumption		Control Input				Control Input MFT				Position Feedback		Auxiliary Switches	NEMA 4
	Motor Drive (Default)	Spring Return	24 VAC +/- 20%, 50/60 HZ, VDC +/- 10%	24 to 240 VAC +10%/- 20%, 50/60 HZ 24 to 125 VDC +/- 10%	120 VAC +/- 10%	230 VAC +/- 10%	VA Rating, Transformer Sizing	Wattage Running (Holding)	On/Off	2-10 VDC (Default) 4-20 mA (w/500 Ω Resistor)	0-20 V Phasecut	Honeywell Series 90, 0-135 Ω	On/Off	Floating Point	Start and Span adj., Start 0.5 to 30 VDC, Span 2.5 to 32 VDC	PWM adj., 0.02 to 50.0 Seconds	2-10 VDC (Default)	VDC Variable, Start 0 to 8, Span 2 to 10 VDC	2 SPDT, 3 A (0.5 A inductive) @250V	NEMA 4 Option (part # + N4) Example: EFB24 N4
EFB24†	75	<20♦	●				16	9.5 (4.5)	●											●
EFB24-S†	75	<20♦	●				16	9.5 (4.5)	●										●	
EFX120†	75	<20♦			●	●	21	9.5 (4.5)	●											
EFB120-S†	75	<20♦			●	●	21	9.5 (4.5)	●										●	●
EFB24-SR	95	<20♦	●				14	8 (4.5)		●							●			●
EFX24-SR-S	95	<20♦	●				14	8 (4.5)		●							●		●	●
EFB24-MFT†	60…150 (150)	<20♦	●				16	9.5 (4.5)		●			●	●	●	●	●	●		
EFB24-MFT-S†	60…150 (150)	<20♦	●				16	9.5 (4.5)		●			●	●	●	●	●	●	●	
AFB24†	<75	20♦	●				7.5	5.0 (2.5)												●
AFB24-S†	<75	20♦	●				7.5	5.0 (2.5)											●	●
AFBUP†	<75	20♦		●			8.5*	7.0 (3.5)	●											●
AFBUP-S†	<75	20♦		●			8.5*	7.0 (3.5)	●										●	●
AFB24-SR	95	<20♦	●				8.5	5.5 (3.0)		●							●			●
AFB24-SR-S	95	<20♦	●				8.5	5.5 (3.0)		●							●		●	●
AFB24-PC	150	<20♦	●				10	7.5 (3.0)			●						●			
AFB24-MFT†	70…220 (150)	<20♦	●				10	7.5 (3.0)		●			●	●	●	●	●	●		●
AFB24-MFT-S†	70…220 (150)	<20♦	●				10	7.5 (3.0)		●			●	●	●	●	●	●	●	●
AFB24-MFT95†	70…220 (150)	<20♦	●				10	7.5 (3.0)				●					●	●		●
NFB24	<75	20♦	●				8.5	6.0 (2.5)	●											●
NFB24-S	<75	20♦	●				8.5	6.0 (2.5)	●										●	●
NFBUP	<75	20♦		●			6.5	6.0 (2.5)	●											●
NFBUP-S	<75	20♦		●			6.5	6.0 (2.5)	●										●	●
NFB24-SR	95	<20♦	●				6	3.5 (2.5)		●							●			●
NFB24-SR-S	95	<20♦	●				6	3.5 (2.5)		●							●		●	●
NFB24-MFT	40…220 (150)	<20♦	●				9	6.5 (3.0)		●			●	●	●	●	●	●		●
NFB24-MFT-S	40…220 (150)	<20♦	●				9	6.5 (3.0)		●			●	●	●	●	●	●	●	●

♦ <60 seconds @ -22°F [-30°C].
† Piggy back mounting on a single shaft: On/Off wired in parallel and -MFT (EFB and AFB only) wired master slave. Please call Belimo customer service for details.
* 8.5 VA for 120 VAC; 7 VA for 24 VAC, 18 VA for 240 VAC.

SPRING RETURN ACTUATORS

BELIMO

Standard Spring Return Damper Actuator Product Range

		Running Time(s)		Power Supply			Power Consumption		Control Input						Control Input MFT				Position Feedback		Auxiliary Switches
		Motor Drive (Default)	Spring Return	24 VAC +/- 20%, 50/60 HZ, VDC +/- 10%	120 VAC +/- 10%	230 VAC +/- 10%	VA Rating, Transformer Sizing	Wattage Running (Holding)	On/Off	Floating Point	2-10 VDC (Default) 4-20 mA (w/500 Ω Resistor)	3 kΩ NTC Type 10 Thermistor	6 - 9 VDC, 20 VDC Output Voltage	On/Off	Floating Point	Start and Span adj., Start 0.5 to 30 VDC, Span 2.5 to 32 VDC	PWM adj., 0.02 to 50.0 Seconds	2-10 VDC (Default)	VDC Variable, Start 0 to 8, Span 2 to 10 VDC	1 SPDT, 3 A (0.5 A inductive) @250V
 LF Series 35 in-lbs [4 Nm] Approx. 8.5 sq. ft.	LF24 US	<40 to 75	<25♦	●			7	5.0 (2.5)	●												
	LF24-S US	<40 to 75	<25♦	●			7	5.0 (2.5)	●												●
	LF120 US	<40 to 75	<25♦		●		7.5	5.5 (3.5)	●												
	LF120-S US	<40 to 75	<25♦		●		7.5	5.5 (3.5)	●												●
	LF230 US	<40 to 75	<25♦			●	7	5.0 (3.0)	●												
	LF230-S US	<40 to 75	<25♦			●	7	5.0 (3.0)	●												●
	LF24-SR US	150	<25♦	●			5	2.5 (1.0)			●								●		
	LF24-SR-S US	150	<25♦	●			5	2.5 (1.0)			●								●		●
	LF24-SR-E US	150	<25♦	●			5	2.5 (1.0)			●								●		
	LF24-3 US	150	<25♦	●			5	2.5 (1.0)		●											
	LF24-3-S US	150	<25♦	●			5	2.5 (1.0)		●											●
	LF24-ECON-R03 US	95	<25♦	●			5	2.5 (1.0)				●							●		
	LF24-MFT US	75…300 (150)	<25♦	●			5	2.5 (1.0)			●			●	●	●	●	●	●		
	LF24-MFT-S US	75…300 (150)	<25♦	●			5	2.5 (1.0)			●			●	●	●	●	●	●		●
	LF24-MFT-20 US	150	<25♦	●			6	3.5 (1.5)					●	●	●	●	●	●	●		
	LF24-MFT-S-20 US	150	<25♦	●			6	3.5 (1.5)					●	●	●	●	●	●	●		●
	LFC24-3-R US	90	<25♦	●			5	2.5 (1.0)		●											
	LFC24-3-S US	90	<25♦	●			5	2.5 (1.0)		●											●
 TFB Series 22 in-lbs [2.5 Nm] Approx. 5.5 sq. ft.	TFB24	<75	<25♦	●			5	2.0 (1.3)	●												
	TFB24-S	<75	<25♦	●			5	2.0 (1.3)	●												●
	TFLB24	<75	<75	●			5	2.0 (1.3)	●												
	TFB120	<75	<25♦		●	●	5	2.5 (1.3)	●												
	TFB120-S	<75	<25♦		●	●	5	2.5 (1.3)	●												●
	TFLB120	<75	<75		●	●	5	2.5 (1.3)	●												
	TFCB120-S	<30	<25♦		●	●	6	3.0 (1.5)	●												●
	TFB24-SR	95	<25♦	●			4	2.0 (1.0)			●								●		
	TFB24-SR-S	95	<25♦	●			4	2.0 (1.0)			●								●		●
	TFB120-SR	95	<25♦		●	●	5.5	2.5 (2.0)			●								●		
	TFB24-3	95	<25♦	●			4	2.5 (1.0)		●											
	TFB24-3-S	95	<25♦	●			4	2.5 (1.0)		●											●
	TFB24-MFT	75…300 (150)	<25♦	●			4	2.5 (1.0)			●			●	●	●	●	●	●		
	TFB24-MFT-S	75…300 (150)	<25♦	●			4	2.5 (1.0)			●			●	●	●	●	●	●		●

♦ <60 seconds @ -22°F [-30°C].

Spring Return Damper Actuators

The quickest install or retrofit designed with ease in mind

The ZG-JSL linkage is designed to simplify the attachment of select Belimo actuators to a damper's jackshaft. The unique open ended design allows the linkage to clamp on to any part of a jackshaft measuring from 1/2" to 1.05" in diameter.

Saves time and cost

The ZG-JSL linkage simplifies typical installations and eliminates the difficulties where jackshaft bearings are hard to access. Belimo has simplified installing actuators onto jackshafts, reducing installation time translating into a cost savings. Now with the ZG-JSL linkage, jackshaft installations are done in minutes!

Ideal for tight spaces

The ZG-JSL linkage has a built-in shaft which allows the direct coupling of Belimo actuators. The anti-rotation plate enables the installed actuator to be rotated 90 degrees for space saving applications.



Part #	Description	LIST
ZG-JSL	Jackshafts (only)	$517.00

SPRING RETURN ACTUATORS

BELIMO

Custom Spring Return Damper Actuator Product Range

		Custom Options	Running Time(s)		Power Supply				Power Consumption		Control Input			Control Input MFT				Position Feedback		Auxiliary Switches		NEMA 4
		10 ft. (3m) or 16 ft. (5m) cable	Motor Drive (Default)	Spring Return	24 VAC +/- 20%, 50/60 HZ, VDC +/- 10%	24 to 240 VAC +10%/- 20%, 50/60 HZ 24 to 125 VDC +/- 10%	120 VAC +/- 10%	230 VAC +/- 10%	VA Rating, Transformer Sizing	Wattage Running (Holding)	On/Off	2-10 VDC (Default) 4-20 mA (w/500 Ω Resistor)	Honeywell Series 90, 0-135 Ω	On/Off	Floating Point	Start and Span adj., Start 0.5 to 30 VDC, Span 2.5 to 32 VDC	PWM adj., 0.02 to 50.0 Seconds	2-10 VDC (Default)	VDC Variable, Start 0 to 8, Span 2 to 10 VDC	2 SPDT, 3 A (0.5 A inductive) @250V	1 SPDT, 3 A (0.5 A inductive) @250V	NEMA 4 Option (part # + N4) Example: EFX24-S N4
 EFX Series 270 in-lbs [30 Nm] Approx. 66 sq. ft.	EFX24†	●	75	<20♦	●				16	9.5 (4.5)	●											
	EFX24-S†	●	75	<20♦	●				16	9.5 (4.5)	●									●		●
	EFX120†	●	75	<20♦			●	●	21	9.5 (4.5)	●											
	EFX120-S†	●	75	<20♦			●	●	21	9.5 (4.5)	●									●		●
	EFX24-SR	●	95	<20♦	●				14	8 (4.5)		●						●				
	EFX24-SR-S	●	95	<20♦	●				14	8 (4.5)		●						●		●		●
	EFX24-MFT†	●	60…150 (150)	<20♦	●				16	9.5 (4.5)		●		●	●	●	●	●	●			
	EFX24-MFT-S†	●	60…150 (150)	<20♦	●				16	9.5 (4.5)		●		●	●	●	●	●	●	●		●
 AFX Series 180 in-lbs [20 Nm] Approx. 45 sq. ft.	AFX24†	●	<75	20♦	●				7.5	5.0 (2.5)	●											●
	AFX24-S†	●	<75	20♦	●				7.5	5.0 (2.5)	●									●		●
	AFXUP†	●	<75	20♦		●			8.5*	7.0 (3.5)	●											●
	AFXUP-S†	●	<75	20♦		●			8.5*	7.0 (3.5)	●									●		●
	AFX24-SR	●	95	<20♦	●				8.5	5.5 (3.0)		●						●				●
	AFX24-SR-S	●	95	<20♦	●				8.5	5.5 (3.0)		●						●		●		●
	AFX24-MFT†	●	70…220 (150)	<20♦	●				10	7.5 (3.0)		●		●	●	●	●	●	●			●
	AFX24-MFT-S†	●	70…220 (150)	<20♦	●				10	7.5 (3.0)		●		●	●	●	●	●	●	●		●
	AFX24-MFT95†		70…220 (150)	<20♦	●				10	7.5 (3.0)			●					●	●			●
 NFX Series 90 in-lbs [10 Nm] Approx. 22 sq. ft.	NFX24	●	<75	20♦	●				8.5	6.0 (2.5)	●											●
	NFX24-S	●	<75	20♦	●				8.5	6.0 (2.5)	●									●		●
	NFXUP	●	<75	20♦		●			6.5	6.0 (2.5)	●											●
	NFXUP-S	●	<75	20♦		●			6.5	6.0 (2.5)	●									●		●
	NFX24-SR	●	95	<20♦	●				6	3.5 (2.5)		●						●				●
	NFX24-SR-S	●	95	<20♦	●				6	3.5 (2.5)		●						●		●		●
	NFX24-MFT	●	40…220 (150)	<20♦	●				9	6.5 (3.0)		●		●	●	●	●	●	●			●
	NFX24-MFT-S	●	40…220 (150)	<20♦	●				9	6.5 (3.0)		●		●	●	●	●	●	●	●		●
 TFX Series 22 in-lbs [2.5 Nm] Approx. 5.5 sq. ft.	TFX24	●	<75	<25♦	●				5	2.0 (1.3)	●											
	TFX24-S	●	<75	<25♦	●				5	2.0 (1.3)	●										●	
	TFX120	●	<75	<25♦			●	●	5	2.5 (1.3)	●											
	TFX120-S	●	<75	<25♦			●	●	5	2.0 (1.3)	●										●	
	TFX24-SR	●	95	<25♦	●				4	2.0 (1.0)		●						●				
	TFX24-SR-S	●	95	<25♦	●				4	2.0 (1.0)		●						●			●	
	TFX24-3	●	95	<25♦	●				4	2.5 (1.0)												
	TFX24-3-S	●	95	<25♦	●				4	2.5 (1.0)											●	
	TFX24-MFT	●	75…300 (150)	<25♦	●				4	2.5 (1.0)		●		●	●	●	●	●	●			
	TFX24-MFT-S	●	75…300 (150)	<25♦	●				4	2.5 (1.0)		●		●	●	●	●	●	●		●	

♦ <60 seconds @ -22°F [-30°C].
† Piggy back mounting on a single shaft: On/Off wired in parallel and -MFT (EFX and AFX only) wired master slave. Please call Belimo customer service for details.
* 8.5 VA for 120 VAC; 7 VA for 24 VAC, 18 VA for 240 VAC.

NON-SPRING RETURN ACTUATORS

BELIMO

LMX SERIES

LMX24-MFT



Torque: 45 in-lb [5 Nm]
Control Input: Electronic controller or positioner.
Overload Protection: electronic throughout 0...95° rotation
Angle of rotation: Max. 95°
Manual override: external push button
Direction of rotation: selectable with switch 0/1
Dimensions: 1/4" - 3/4" (6-20) | f/16" - 3/4" (8-26)
Electrical connection: 18 GA plenum cable with 1/2" conduit connector, degree of protection NEMA 2 / IP54, 1 m 3 m and 5 m
Built-in auxiliary switch: Auxiliary switch 1 x SPDT add-on
Housing: UL94-5VA

NMX SERIES

NMX24-MFT



Torque: 90 in-lb [10 Nm]
Control Input: 4 to 20 mA control input from an electronic controller or positioner.
Overload Protection: electronic throughout 0...95° rotation
Angle of rotation: Max. 95°
Manual override: external push button
Direction of rotation: selectable with switch 0/1
Dimensions: 1/2" - 1.05 (12.7 - 26.67) | 2/5" - 1.05" (10 - 26.67)
Electrical connection: 18 GA plenum cable with 1/2" conduit connector, degree of protection NEMA 2 / IP54,1 m 3 m and 5 m
Built-in auxiliary switch: AAdd-on auxiliary switches or feedback potentiometers are easily fastened directly onto the actuator body for signaling and switching functions.
Housing: UL94-5VA

AMX SERIES

AMX24-MFT



Torque: 180 in-lb [20 Nm]
Control Input: a 4 to 20 mA control input
Overload Protection: electronic throughout 0...95° rotation
Angle of rotation: Max. 95°
Manual override: external push button
Direction of rotation: selectable with switch 0/1
Dimensions: 1/2" - 1.05 (12.7 - 26.67) | 2/5" - 1.05" (10 - 26.67)
Electrical connection: 18 GA plenum cable with 1/2" conduit connector, degree of protection NEMA 2 / IP54, 1 m 3 m and 5 m
Built-in auxiliary switch: Add-on auxiliary switches or feedback potentiometers are easily fastened directly onto the actuator body for signaling and switching functions.
Housing: UL94-5VA

GMX SERIES

GMX24-MFT



Torque: 360 in-lb [40 Nm]
Overload Protection: electronic throughout 0...95° rotation
Angle of rotation: Max. 95°
Manual override: external push button
Dimensions: 1/2" - 1.05" (12.7 - 26.67) | 2/5" - 1.05" (10 - 26.67)
Electrical connection: 18 GA plenum cable with 1/2" conduit connector, degree of protection NEMA 2 / IP54, 1 m 3 m and 5 m
Built-in auxiliary switch: Auxiliary switch 1 x SPDT add-on S1A
Auxiliary switch 2 x SPDT add-on
Housing: UL94-5VA

SPRING RETURN ACTUATORS

BELIMO

TFX SERIES

TFX24-S



Torque: Min. 22 in-lbs [2.5 Nm
Overload Protection: electronic throughout 0° to 95° rotation
Angle of rotation: Max. 95°, adjustable with mechanical stop
Direction of rotation: eversible with CW/CCW mounting
Electrical connection: actuators are double insulated
Built-in auxiliary switch: 1 x SPDT, 3A resistive (0.5A inductive) @ 250 VAC, adjustable 0° to 95°
Housing: UL94-5VA

LF SERIES

LF24-MFT US



Torque: 35 in-lb minimum
Control Input: Variable with MFT (VDC, PWM, Floating Point, On-Off)
Overload Protection: electronic throughout rotation
Angle of rotation: 95° (adjustable) (Electronically variable 0-100%
Fit Shaft diameter: 3/8" - 1/2" (standard) | 1/2" - 3/4" (with K6-1 clamp accessory
Direction of rotation: CW/CCW external switch (proportional models)
Spring return reversible: CW/CCW mounting
Dimensions: 7.67" x 3.15" x 3.23" (195 x 80 x 82 mm)
Electrical Connection: 3 ft cabe, 1/2 conduit fitting, 18 GA plenum rated cable
Built-in auxiliary switch: 1 x SPDT, Adjustable 0°- 95°
Housing: NEMA 2

NFX SERIES

NFX24-MFT



Torque: 90 in-lb [10 Nm]
Control Input: a 4 to 20 mA control input from an electronic controller or positioner
Overload Protection: electronic throughout 0...95° rotation
Angle of rotation: 95°
Direction of rotation: reversible with cw/ccw mounting
Spring return reversible: The spring return system provides minimum specified torque to the application during a power interruption.
Electrical Connection: 18 GA appliance or plenum cables, 1 m, 3 m or 5 m, with or without 1/2" conduit connector
Housing: Galvanized steel and plastic housing

AFX SERIES

AFX24-MFT



Torque: 180 in-lb [20 Nm]
Control Input: a 4 to 20 mA control input from an electronic controller or positioner.
Overload Protection: electronic throughout 0...95° rotation
Angle of rotation: 95°
Direction of rotation: selectable with switch 0/1
Spring return reversible: The spring return system provides minimum specified torque to the application during a power interruption.
Electrical Connection: 18 GA appliance or plenum cables, 1 m, 3 m or 5 m, with or without 1/2" conduit connector
Housing: Galvanized steel and plastic housing

THERMO/MOTORS
667-719

CHARACTERIZED CONTROL VALVES

BELIMO

New CCV Product Options Offer More Flexibility



TR Compact Rotary Actuator

- TR24-3-T US (covered terminal strip)
- TR24-3 US (3-foot cable) on/off, floating control
- TR24-SR-T US and TR24-SR US, 2-10 VDC control
- Designed specially for 1/2" valves

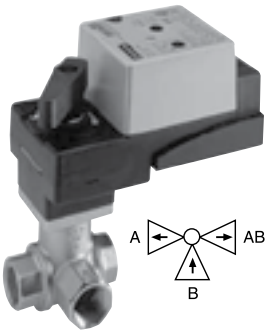

B3…BD Diverting Valve for Direct Replacement of Standard Ball Valve

- 1/2" and 3/4" 3-way
- Chrome plated brass ball and stem
- Piping is the same as standard ball valves and zone valves

B2/B3 with low C_Vs down to 0.3

- 1/2", 2-way and 3-way
- Additional C_V range of 0.3 and 0.46
- Chrome-plated brass ball and stem or stainless steel ball and stem
- Compact solution with TR actuator ideal for unit ventilators, VAV re-heat



B661-B680 Flanged CCVs to 3" for Large Air Handler Applications

- 2-1/2" with C_V: 65, 90, 130, 180, and 265
- 3" with C_V: 90, 180, 220, and 265
- 100 PSI close-off
- Stainless steel ball and stem
- Spring return and non-spring return actuators



NR Actuator For Fluid Temperature to 250° F

- NR24-3 US, on/off, floating control
- NR24-SR US, 2-10 VDC control
- For 1/2" to 2", 2-way and 3-way CCVs
- For use up to 160°F ambient and 250°F fluid temperature
- Temporary or permanent disengagement for manual operation



B251-B280 Threaded CCVs up to 3"

- 2" with C_V: 65, 90, 130, and 265
- 2-1/2" with C_V: 65, 90, 130, 180, and 265
- 3" with C_V: 90, 180, 220, and 265
- 100 PSI close-off
- Stainless steel ball and stem
- Spring return and non-spring return actuators

Please contact your local branch for more information.

CONTROL VALVES

BELIMO



Electronic Globe Valves



Electronic Butterfly Valves



Electronic Zone Valves



Electronic Characterized Control Valves™

We have a large selection of Belimo Control Valves available.

Please contact your local branch for more information and pricing.

Sizing and Selection

Two-Way Valve, Water Application

Two-position applications — Valve should be line size.

Modulating applications

- Flow characteristic — Equal percentage
- Sizing — ΔP should match ΔP of coil or 3 to 5 psi drop

or use ASHRAE Authority Method

Note: Valve and actuator must meet conditions of service.
Always verify:

- Maximum pressure of body
- Close off pressure rating
- Ambient temperature limits are within valve/actuator limits
- Actuator control circuit matches analog or digital output

Three-Way Valve, Water Application

Two-position applications — Valve should be line size.

Modulating applications

Flow characteristic — Linear

- Constant flow — Valve should be line size or ΔP equal to coil drop
- Variable flow — Size valve for 3 to 5 psi pressure drop or use ASHRAE authority method
- Cooling tower bypass — Size valve according to required pressure drop and flow requirement
- System bypass — Size valve according to required pressure drop and flow requirement

Water Application

Equations: $C_V = \frac{Q\sqrt{G}}{\sqrt{\Delta P}}$

Where Q = Flow in gallons per minute (GPM) required to pass through the valve
G = Specific Gravity of Fluid (Water = 1)
ΔP = Pressure drop across the valve in PSI
C_V = Flow Coefficient

Alternate Forms:

$$Q = \frac{C_V\sqrt{\Delta P}}{\sqrt{G}} \qquad \Delta P = \left(\frac{(Q\sqrt{G})}{C_V}\right)^2$$

$$K_{VS} = \frac{C_V}{1.16}$$

GAS MONITORING DEVICES

BELIMO



HVAC system operation is critical for maintaining adequate safe indoor air quality (IAQ). Belimo gas monitoring systems provide accurate measurement, superior reliability, and easy installation. They can work as a standalone system or seamlessly integrate into major Building Management Systems (BMS). An intelligent peer-to-peer communication protocol allows users to configure and install a complete ventilation control system with only one monitor, or dozens, operating in multiple ventilation zones. The result is the assurance of occupant safety and comfort in buildings.

Belimo's gas monitors provide air quality monitoring for commercial properties. Closely monitoring airborne pollutants to control fresh air ventilation improves the health and wellbeing of occupants, while minimizing excess ventilation, resulting in reduced energy and maintenance costs. Belimo gas monitors are factory calibrated and can monitor up to two gases simultaneously. All monitors feature audible and visual alarms and CAN bus communication, allowing for standalone operation and networking of up to 32 devices. Select models feature relays and analog outputs to control ventilation directly, as well as BACnet MS/TP, allowing for integration into a BMS. The monitors can be easily assigned to groups on site for ventilation zoning on the same network, significantly reducing control wiring and installation time. Gas monitors are wired via a daisy chain and are required to be calibrated annually. All gas monitoring products are backed by a five-year warranty, with the exception of sensor modules, which are backed by a one-year warranty.

- **SEAMLESS INTEGRATION:** Enhanced communication and integration with major building management systems via via BACnet MS/TP with select models.
- **MODULAR DESIGN:** The compact modular design allows for easy instlalation and commisioning to ensure optimal system performance
- **RELIABLE AND DEPENDABLE:** Factory calibrated and designated from the highest quality materials delivering accurate and dependable readings

PRODUCT RANGE

VEHICLE EMISSIONS

Application		Model #	Old Model #	Output signal				Measuring range			Communication	
				Active	1 SPDT relay	2 SPDT relays	2 analog 4...20 mA or 2...10 V	Carbon Monoxide	Nitrogen Dioxide	Measuring range	CAN bus	BACnet MS/TP
	Vehicle Emissions	22G02-5A	EXT-OP-6002-250-A	■	■		■	■		0...250 ppm	■	■
		22G02-5B	EXT-OP-6002-250-B	■		■		■			■	■
		22G02-5C	EXT-OP-6002-250-C	■				■			■	
		22G14-5A	EXT-OP-6014-A	■	■		■		■	0...10 ppm	■	■
		22G14-5B	EXT-OP-6014-B	■		■			■		■	■
		22G14-5C	EXT-OP-6014-C	■					■		■	
		22G0214-5A	EXT-6002-250-14-A	■	■		■	■	■	0...250 ppm CO, 0...10 ppm NO_2	■	■
		22G0214-5B	EXT-6002-250-14-B	■		■		■	■		■	■
		22G0214-5C	EXT-6002-250-14-C	■				■	■		■	

GAS MONITORING DEVICES

COMBUSTIBLE AND TOXIC GAS MONITORING

Application	Model #	Old Model #	Output signal				Measuring range									Communication	
			Active	1 SPDT relay	2 SPDT relays	2 analog 4...20 mA or 2...10 V	Ammonia	Methane	Propane	Hydrogen	Hydrogen Sulfide	Chlorine	Oxygen Leak	Oxygen Depletion	Measuring range	CAN bus	BACnet MS/TP
 Combustible and Toxic Gas	22G04-5A	EXT-OP-6004-A	■	■		■	■								0...250 ppm	■	■
	22G04-5B	EXT-OP-6004-B	■		■		■									■	■
	22G05-5A	EXT-OP-6005-A	■	■		■		■							0...50% LEL	■	■
	22G05-5B	EXT-OP-6005-B	■		■			■								■	■
	22G05-5C	EXT-OP-6005-C	■					■								■	
	22G06-5A	EXT-OP-6006-A	■	■		■			■							■	■
	22G06-5B	EXT-OP-6006-B	■		■				■							■	■
	22G06-5C	EXT-OP-6006-C	■						■							■	
	22G08-5A	EXT-OP-6008-A	■	■		■				■						■	■
	22G08-5B	EXT-OP-6008-B	■		■					■						■	■
	22G08-5C	EXT-OP-6008-C	■							■						■	
	22G16-5A	EXT-OP-6016-A	■	■		■					■				0...50 ppm	■	■
	22G16-5B	EXT-OP-6016-B	■		■						■					■	■
	22G17-5A	EXT-OP-6017-A	■	■		■						■			0...10 ppm	■	■
	22G17-5B	EXT-OP-6017-B	■		■							■				■	■
	22G22-5A	EXT-OP-6022-A	■	■		■							■		0...50% O_2	■	■
	22G22-5B	EXT-OP-6022-B	■		■								■			■	■
	22G23-5A	EXT-OP-6023-A	■	■		■								■		■	■
	22G23-5B	EXT-OP-6023-B	■		■									■		■	■

ACCESSORIES

Application	Model #	Old Model #	Output signal					Communication	
			Active	1 SPDT relay	2 SPDT relays	4 SPDT relays	2 analog 4...20 mA or 2...10 V	CAN bus	BACnet MS/TP
 Communication Modules	C-22G-5A	EXT-OP-6000-A	■	■			■	■	■
	C-22G-5B	EXT-OP-6000-B	■		■			■	■
	C-22G-5C	EXT-OP-6000-C	■					■	
 Relay Unit	C-22G-50	EXT-OP-6100	■			■		■	
 High-Low Kit	A-22G-A14	EXT-OP-6000-HL							

For all gas monitoring accessories, please see the Product Guide and Price List on the Belimo website.

THERMOSTATS

Fast-Stat Thermostat Multiplexer



The Fast-Stat is designed to simplify retrofit wiring projects by eliminating the need to pull new wiring for thermostat upgrades.

- Requires 2 wires only
- Provides up to 6 control signals
- 24 VAC for programmable stats - models 5000 and 7000
- All thermostat wiring completed in 15 minutes

Model #	Conversion	24 VAC	Terminals Provided							LIST
			R	C	Y	W1	W2	G	O/B	
3000	2 to 4 wire		•		•	•		•		-
5000	2 to 6 wire	•	•	•	•	•	•	•		-
7000	2 to 6 wire	•	•	•	•	•		•	•	-

WHITE-RODGERS

Comfort-Set 70 Single Stage Thermostats

For residential heating and cooling applications.

Features:

- Battery powered for maximum compatibility
- Fossil fuel or electric heat compatible
- Large LCD with backlight
- Selectable celsius or fahrenheit temperature display
- Includes O and B terminals
- Classic white colour



1E78-151

Specifications:

Setpoint Temperature Range..... 45 to 90°F (7 to 32°C)
Anticipation, Heating..... Adjustable
Anticipation, Cooling..... Adjustable
Rated Differential, Heat ..... 0.6 or 1.5°F
Rated Differential, Cool ..... 1.2°F
Dimensions..... 3-3/4"H x 5-1/8"W x 1-1/8"D



1F78-144

Part #	Typical Application	Programming	Stages Heat/Cool	System Switch	Fan Switch	Voltage	Power Method	Terminals	LIST
1F78-144-EME	Gas, Oil, Electric	non-programmable	1/1	Heat-Off-Cool	Auto-On	24 Volts or Millivolt	battery powered	RC, RH, W, Y, G, O, B	$109.20
1E78-151-EME		7 day program							$130.20

THERMOSTATS
WHITE-RODGERS

Comfort-Set 80 Single Stage Thermostats

For residential and light commercial heating and cooling

Comfort-Set 80 Series Multi-Stage and Heat Pump Multi-Stage Thermostats

For residential and light commercial applications up to 2 stages heat, 2 cool multi-stage and 2 stages heat, 1 cool heat pump



1F80-0471

Features:

- Choice of battery powered or hardwired models
- Fossil fuel or electric heat compatible
- 60% larger LCD with backlight
- Permanent program retention during power loss
- Configuration menu allows keypad selection of options
- Selectable celsius or fahrenheit temperature display
- Classic white colour
- Selectable energy management recovery:
  Comfort-Set 80 Single Stage - 1F80-240 / 1F80-241 / 1F80-261
  Comfort-Set 80 Multi-Stage - 1F81-261 / 1F82-261

Comfort 80 Single Stage Specifications:

Setpoint Temp. Range ..... 45 to 90°F (7 to 32°C)
Anticipation, Heating..... Adjustable
Anticipation, Cooling..... Fixed
Rated Differential, Heat ..... 0.6 or 1.5°F
Rated Differential, Cool ..... 1.2°F
Dimensions..... 3-3/4"H x 6"W x 1-1/4"D

Comfort 80 Multi Stage Specifications:

Setpoint Temp. Range ..... 45 to 90°F (7 to 32°C)
Rated Differential (multi-stage)..... Heat 0.6 or 1.5°F
Cool 1.2°F
Rated Differential (heat pump) ..... Heat & Cool 0.75 or 1.2°F
Dimensions..... 3-3/4"H x 6"W x 1-1/4"D

Part #	Typical Application	Programming	Stages Heat/Cool	System Switch	Fan Switch	Anticipation Heat/Cool	Power Method	EMR	Terminals	LIST
SINGLE STAGE										
1F80-0471-EME	Gas, Oil, Electric	5+1+1 or Non-0Programmable	1/1	Heat,Off, Cool	Auto, On	Adjustable/ Fixed	Dual Power	Yes	RC, C, RH, W, Y, G, O, B	$168.00
MULTI-STAGE										
1F81-261	Multi-stage	5 + 1 + 1	2/2	Heat,Off, Cool	Auto, On	Adjustable/ Fixed	Dual Power (R-C and/or batteries)	Yes	R, C, G, Y, Y2, W, W2	
1F85U-22PR-EME	Multi-stage Gas/ Heat Pump	5 + 1 + 1 Keypad Lockout	2/2	Heat,Off, Cool, Emergency	Auto, On	Adjustable/ Adjustable	Dual Power (R-C and/or batteries)	Yes	R, C, G, W1, W2, Y1, Y2, L, O, B	$280.10

THERMOSTATS
WHITE-RODGERS

Comfort-Set 90 Single/Multi-Stage and Heat Pump Thermostats

For residential and commercial heating and cooling applications.

Features:
- Selectable automatic heat/cool system changeover
- Fossil fuel or electric heat compatible
- Large Comfort-View luminiscent display
- Permanent program retention during power loss
- Configuration menu allows keypad selection of options
- Selectable Celsius or Fahrenheit temperature display
- Programmable blower control and blower delay timings
- Selectable energy management recovery
- Built-in system and thermostat diagnostics
- Digital-signal remote sense capable
- Single Stage & Multi-Stage models: classic white colour
  Commercial model: commercial grey colour

Multi-Stage & Heat Pump Multistage added features:
- 7-day programming with automatic heat/cool system changeover
- Up to 4 digital-signal sensing locations with up to 3 remote indoor sensors plus thermostat. Also displays outdoor temperature with optional outdoor sensor. Temperature sensing can be averaged or weighted by sensor location.

Commercial Multi-Stage or Heat Pump added features:
- 7-day programming with occupied and unoccupied setback settings



1F80-0471



1F97-1277

Part #	Typical Application	Programming	Stages Heat/ Cool	System Switch	Fan Switch	Voltage	Power Method	Program Fan	Keypad Lockout	Terminals	LIST
COMMERCIAL MULTI-STAGE											
1F95-1277-EME	Universal	7 Day	1/1	Heat,Off, Cool, Auto	Auto, On	24 Volts or Millivolt	Hardwired (R-C)		Yes	R, C, G, Y1, Y2, W1, W2, W3/A1, E2/P, E, O, B, L	$650.00
1F97-1277-EME	Gas, Oil, Elec., 3-wire zone	7 Day Program	1/1	Heat,Off, Cool, Auto	Auto, On	24 Volts or Millivolt	Hardwired (R-C)	Yes	Yes	RC, RH, W, Y, G, MV, O, B, 6	$576.00

TEMPERATURE CONTROLS
WHITE-RODGERS



1E30N-311



1E56N-361



1E50N-303



1F83-0422

Horizontal & Vertical Thermostats

Control of low voltage heating, cooling, heating/cooling and zoning installations.

1E - Vertical
1F = Horizontal

Heating

Model No.	Range	Differential	Switch Action	Type Anticipation	LIST
1E30N-311	50 to 90°F (10 to 32°C)	1°F	Open on Rise	Adj. 0.15 to 1.2A	$88.50

Heating/Cooling and Cooling Only - With Selector Switches

Heating/Cooling Type

Model No.	Range	Differential	Switch Action	LIST
1E56N-361	50 to 90°F (10 to 32°C)	Heating 1°F / Cooling 1.5°F	SPDT	$105.50

Heating

Model No.	Range	Differential	System Switch Positions		LIST
			System	Fan	
1E50N-303	50 to 90°F (10 to 32°C)	1°F	None	Auto-On	$96.90

Multi-Stage Low Voltage Heating Thermostat

Model No.	Range	Differential		Switch Action	LIST
		System	Fan		
1F85U-22NP-EME	50 to 90°F (10 to 32°C)	1st 2nd	1.0°F 1.5°F	SPST	$212.50

TEMPERATURE CONTROLS

WHITE-RODGERS

Refrigeration Temperature Controls (Remote Bulb)

Provide positive control of refrigeration applications where remote control is desired.



Part #	Range	Differential	Capillary Length	Switch Action	LIST
1609-90	-55 to 33°F (-12.7 to 0.5°C)	Fixed	40 in.	Close on Rise	$329.00]
1609-101	-30 to +90°F (-34 to +32°C)	Adj. 3.5 to 40°F (2 to 22°C)	5 ft.	Close on Rise	$248.00
1609-103	-30 to +90°F (-34 to +32°C)	Adj. 3.5 to 40°F (2 to 22°C)	10 ft.	Close on Rise	-
1687-9	-30 to +90°F (-34 to +32°C)	Adj. 4.5 to 40°F (2.5 to 22°C)	8 ft.	SPDT	$296.50

Refrigeration Temperature Controls For Walk In Boxes Space Stat



Part #	Range	Differential	Switch Action	LIST
201-8	20 to 90°F (-7 to +32°C)	Adj. 3 to 20°F (1.5 to 11°C)	Close on Rise	
201-20	-30 to +90°F (-34 to +32°C)	Adj. 3 to 20°F (1.5 to 11°C)	Close on Rise	

Level-Temp Low Voltage Control Systems for Electric Heat

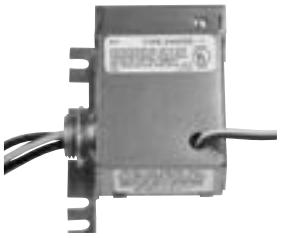

Part #	Input Voltage/Frequency	Thermostat Current	A.C. Resistive (non-inductive)	A.C. Motor Rating (inductive)		LIST
				Full Load	Locked Rotor	
24A01G-3-EME	240 VAC 60 Hz	0.2A	25A, 6000W, 240V	12A, 240V	72A, 240V	$316.00
24A05E-1-EME	208 VAC 60 Hz	0.2A	25A, 5200W, 208V	12A, 208V	72A, 208V	$277.10

FAN RELAY CENTERS

8A05A-1S1 Fan Centers

0.28A coil current, 14A @ 120VAC / 8A 240VAC FL



Model #	Switching	Primary Voltage	Application	LIST
8A05A-201-EME	SPDT	120 V	For single or two speed motors	$314.00

HOT SURFACE IGNITION CONTROLS
WHITE-RODGERS

Universal Silicon Carbide Furnace Control

Universal 50A55-843 will replace all 50A50 and 50A55



Part #	Description	LIST
50A55-843	24V, remote flame sense, 4 recycles, 30 sec. prepurge, 15 sec. postpurge, 60 min. reset, 300 sec. lockout, replaces 50A55-143, 50A55-245, 50A55-286. All timing in seconds	$469.00

Universal Hot Surface Ignition Module (HSI)

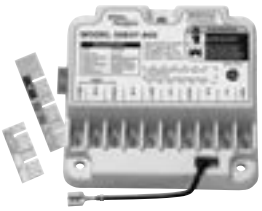

Part #	Description	LIST
50E47-843	4/7 sec. lockout, 0/2 retries, 30 sec. prepurge, 17/45 sec. warm up, 120VAC, 50/60 Hz. Replaces 50E47-50, 50E47-150, 50E47-170	$469.00

AIR SWITCHES

Dual Purpose Air Switches



- Respond to positive, negative or differential air pressure
- Furnished with one 6" piece 1/4" O.D. flexible tubing, nuts and ferrules
- Can be mounted in any position except upside down

Part #	Operating Range	Switch Action	Electrical Ratings			Pilot Duty 125-277v AC	LIST
			Resistive (non-inductive)				
			120v AC	240v AC	277v AC		
770-3	0.07 to 12.0 W.C.	SPDT	15.0A	15.0A	15.0A	300 VA	$141.10

Cleveland Controls Adjustable Air Switch

RSS-495 Series switches feature customer-specified fixed set points between 0.12” w.c. and 4.00” w.c. They can be used to sense positive, negative or differential air pressure, and are available with various sample line connections, terminal styles, and mounting arrangements.

- **Approximate Switching Differential:** .10 ± 0.02” w.c.
- **Measured Media:** Air, or combustion by-products that will not degrade EPDM and Thermoplastic.
- **Operating Temperature Range:** -40°F to 190F (-40 to 88°C).
- **Maximum Pressure:** 1 psi (0.06 bar).
- **Life:** 100,000 cycles minimum.
- **Electrical Rating:** 5 amp non-inductive 120 to 277 V AC, 1 amp pilot duty (120 va) at 120 V AC.
- spdt, spst/no or spst/nc logic.
- **Approval:** UL, CSA, CE, NRTL, & Aust. Gas Assoc.

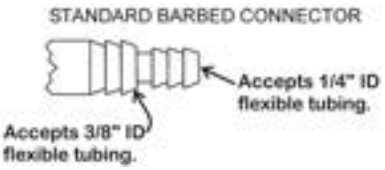



Part #	LIST
RSS-495-011	$110.80

Universal NS2000003

Low cost, high accuracy and reliable universal air pressure switch that replaces many small foot print type switches.

- Senses positive, negative or differential air pressure.
- Set Point Range: 0.10” to 10” w.c.
- Electrical Ratings: 1/10 hp @ 120 to 277 VAC. 28 VA pilot duty @ 24 VAC, 125 VA pilot duty @ 120 VAC.



Part #	LIST
NS2000003	$104.30

TEMPERATURE CONTROLS

WHITE-RODGERS

Snap Disc Fan & Limit Controls

Types for regulation of fan or blower or for high limit safety control.

FAN CONTROL

Part #	Fixed Temperature Settings		Switch Action	LIST
	Cut-In	Cut-Out		
3F01-110	110°F (43°C)	90°F (32°C)	Close on Rise	$22.30
3F01-120	120°F (49°C)	110°F (43°C)	Close on Rise	$21.70
3F01-130	130°F (54°C)	115°F (46°C)	Close on Rise	$21.80
3F01-140	140°F (60°C)	120°F (49°C)	Close on Rise	$21.40
3F01-150	150°F (66°C)	130°F (54°C)	Close on Rise	$21.40
3F01-160	160°F (71°C)	140°F (60°C)	Close on Rise	$21.10
3F01-180	180°F (82°C)	160°F (71°C)	Close on Rise	$21.90
3F01-200	200°F (93°C)	180°F (82°C)	Close on Rise	$22.10
3F01-350	350°F (177°C)	320°F (160°C)	Close on Rise	-



FAN CONTROL - WITH ANTICIPATOR HEATER (SEPARATE CIRCUIT)

Part #	Fixed Temperature Settings		Switch Action	Heater Voltage	LIST
	Cut-In	Cut-Out			
3F02-125	125°F (52°C)	100°F (38°C)	Close on Rise	24v AC	



LIMIT CONTROL

Part #	Fixed Temperature Settings		Switch Action	LIST
	Cut-In	Cut-Out		
3L01-120	110°F (43°C)	120°F (49°C)	Open on Rise	$21.40
3L01-130	115°F (46°C)	130°F (54°C)	Open on Rise	$21.20
3L01-140	100°F (38°C)	140°F (60°C)	Open on Rise	$21.80
3L01-150	110°F (43°C)	150°F (66°C)	Open on Rise	$21.40
3L01-170	130°F (54°C)	170°F (77°C)	Open on Rise	$21.20
3L01-180	140°F (60°C)	180°F (82°C)	Open on Rise	$21.50
3L01-190	150°F (66°C)	190°F (88°C)	Open on Rise	$21.60
3L01-200	160°F (71°C)	200°F (93°C)	Open on Rise	$21.50
3L01-230	190°F (88°C)	230°F (110°C)	Open on Rise	$22.00
3L01-250	210°F (99°C)	250°F (121°C)	Open on Rise	$21.60
3L01-300	250°F (121°C)	300°F (149°C)	Open on Rise	$22.20
3L01-350	310°F (154°C)	350°F (177°C)	Open on Rise	$21.20



LIMIT CONTROLS - MANUAL RESET

Part #	Fixed Temperature Settings		Switch Action	LIST
	Cut-In	Cut-Out		
3L02-160	manual reset	160°F (71°C)	Open on Rise	$35.60
3L02-170	manual reset	170°F (77°C)	Open on Rise	$34.70
3L02-180	manual reset	180°F (82°C)	Open on Rise	$35.50
3L02-190	manual reset	190°F (88°C)	Open on Rise	$35.20
3L02-200	manual reset	200°F (93°C)	Open on Rise	$35.00



SPDT CONTROLS

Part #	Fixed Temperature Settings				Switch Action	LIST
	Terminal 1 & 3		Terminal 1 & 2			
	Cut-Out	Cut-In	Cut-In	Cut-Out		
3L03-140	140°F (60°C)	120°F (49°C)	140°F (60°C)	120°F (49°C)	SPDT	$31.80
3L03-190	190°F (88°C)	170°F (77°C)	190°F (88°C)	170°F (77°C)	SPDT	$31.80



TEMPERATURE CONTROLS

WHITE-RODGERS

Bimetal Disc Thermostats



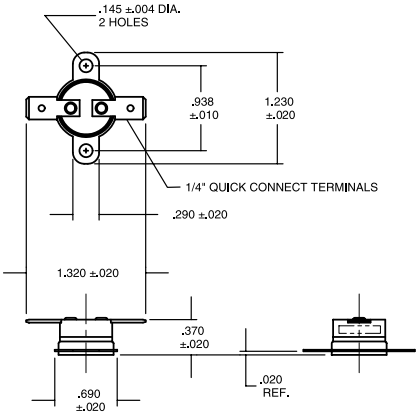

3L11/3F11 SERIES
1/2″ BIMETAL DISC THERMOSTATS

22 New Bimetal Disc Thermostats for Appliance and HVAC

FEATURES

- Loose ring, stainless steel mounting brackets.
- 1/4″ quick connect terminations.
- Automatic reset.
- Aluminum disc cup.

SPECIFICATIONS

Single pole, single throw
Available in either open or close on temperature rise
Electrical Ratings
Resistive . . . . . 15A @ 120VAC, 10A @ 240VAC
Inductive . . . . . 3.0FLA, 12.0LRA @ 120VAC; 1.5FLA, 6.0LRA @ 240 VAC
Pilot Duty 125VA
Dimensions . . . . . Length (1.23″), case width (1.32″), height (.37″)
Weight . . . . . 0.2 oz.
Agency . . . . . UL Recognized File #E19279
CSA Certified File #LR19988
VDE Lic. 81669

Model Number	Description	Temperature °F/°C	Differential °F/°C	Therm-O-Disc Type	Therm-O-Disc Style	Stancor Cross Reference
3L11-60	Open on rise	55 to 65 (°F), 13 to 18 (°C)	20 (°F), 12 (°C)	36T22	10842	STO-60
3L11-85	Open on rise	80 to 90 (°F), 27 to 32 (°C)	15 (°F), 8 (°C)	36T22	10843	STO-85
3F11-100	Close on rise	93 to 107 (°F), 34 to 42 (°C)	30 (°F), 17 (°C)	36T22	10844	STC-100
3L11-110	Open on rise	105 to 115 (°F), 41 to 46 (°C)	30 (°F), 17 (°C)	36T22	10845	STO-110
3L11-120	Open on rise	115 to 125 (°F), 46 to 52 (°C)	30 (°F), 17 (°C)	36T22	10846	STO-120
3F11-120	Close on rise	113 to 127 (°F), 45 to 53 (°C)	30 (°F), 17 (°C)	36T22	10847	STC-120
3L11-140	Open on rise	135 to 145 (°F), 57 to 63 (°C)	30 (°F), 17 (°C)	36T22	10848	STO-140
3F11-140	Close on rise	133 to 147 (°F), 56 to 64 (°C)	30 (°F), 17 (°C)	36T22	10849	STC-140
3L11-150	Open on rise	145 to 155 (°F), 63 to 68 (°C)	30 (°F), 17 (°C)	36T22	10850	STO-150
3L11-160	Open on rise	155 to 165 (°F), 68 to 74 (°C)	30 (°F), 17 (°C)	36T22	10851	STO-160
3L11-170	Open on rise	165 to 175 (°F), 74 to 79 (°C)	30 (°F), 17 (°C)	36T22	10852	STO-170
3F11-170	Close on rise	162 to 178 (°F), 72 to 81 (°C)	30 (°F), 17 (°C)	36T22	10853	STC-170
3L11-175	Open on rise	170 to 180 (°F), 77 to 82 (°C)	15 (°F), 8 (°C)	36T22	10854	STO-175
3L11-180	Open on rise	175 to 185 (°F), 79 to 85 (°C)	30 (°F), 17 (°C)	36T22	10855	STO-180
3F11-180	Close on rise	172 to 188 (°F), 78 to 87 (°C)	30 (°F), 17 (°C)	36T22	10856	STC-180
3L11-190	Open on rise	185 to 195 (°F), 85 to 91 (°C)	30 (°F), 17 (°C)	36T22	10857	STO-190
3L11-210	Open on rise	204 to 216 (°F), 96 to 102 (°C)	30 (°F), 17 (°C)	36T22	10858	STO-210
3L11-220	Open on rise	214 to 226 (°F), 101 to 108 (°C)	30 (°F), 17 (°C)	36T22	10859	STO-220
3F11-225	Close on rise	217 to 232 (°F), 103 to 111 (°C)	30 (°F), 17 (°C)	36T22	10860	STC-225
3L11-230	Open on rise	224 to 236 (°F), 107 to 113 (°C)	30 (°F), 17 (°C)	36T22	10861	STO-230
3F11-240	Close on rise	229 to 251 (°F), 109 to 122 (°C)	100 (°F), 56 (°C)	36T22	10862	STC-240
3L11-250	Open on rise	224 to 256 (°F), 118 to 124(°C)	30 (°F), 17 (°C)	36T22	10863	STO-250
3L11-325	Open on rise	315 to 335 (°F), 157 to 169 (°C)	50 (°F), 28 (°C)	36T22	10864	STO-325

TEMPERATURE CONTROLS

WHITE-RODGERS

Adjustable Snap Disc Fan & Limit Controls

This adjustable snap disc thermostat allows you to set the temperature set point to match your specific needs which simplifies inventory

Part #	Type #	Temperature Range	Differential	Switch Action	Function	Accessories	LIST
3F05-1	39205	90 to 130°F	20°F	SPST	Fan controls (Close on rise)	Includes thermostat and tab-to-screw terminals	$59.20
3F05-2	39210	140 to 180°F	20°F	SPST			$57.00
3L05-1	39220	135 to 175°F	40°F	SPST	Limit controls (Open on rise)		$58.40
3L05-2	39225	175 to 215°F	40°F	SPST			$56.70
3L05-3	39230	210 to 250°F	40°F	SPST			$56.30
3L05-13	39235	250 to 290°F	40°F	SPST			-

Board Mount Limit Controls



1/2” Bimetal Disc with Ranges for Your System Needs

Features:

- Proven reliability in a compact, versatile, cost-effective design
- Provides high-speed contact separation
- OEM replacement for competitive models

Part #	Figure	Construction	Opens/Closes (°F)	Length (in)	TOD Type	TOD Style	LIST
3L09-1	1		140/100	1.87	36T	612700	$46.70
3L09-2	1		170/130	1.87	36T	612708	-
3L09-3	2	A	140/110	3.12	36T	612701	$46.60
3L09-4	2	C	150/130	3.12	36T	612703	$46.70
3L09-5	2	C	160/140	3.12	36T	612706	$46.40
3L09-6	2	B	170/130	3.12	36T	612710	$46.40
3L09-7	2	A	175/145	3.12	36T	612711	$45.30
3L09-8	2	B	180/160	3.12	36T	612714	$46.00
3L09-9	2	C	190/170	3.12	36T	612715	$46.20
3L09-10	2	B	200/160	3.12	36T	612718	$46.70
3L09-11	2	B	210/170	3.12	36T	612719	$46.90
3L09-12	2	B	220/180	3.12	36T	612722	$46.70
3L09-13	2	A	240/210	3.12	36T	612723	$44.90
3L09-14	2	B	250/210	3.12	36T	612725	$47.90

Electric Heat Sequencers - MODEL 24A34

The 24A34 series replacement fan/heat sequencers are for sequencing heating elements and fans in central electric furnaces, supplementary electric heating in heat pumps and central air conditioners and for time delay relay applications. These sequencers are voltage compensated PTC operated devices.

Part #	Heat On	Cool Off	LIST
ONE TIMING - SINGLE POLE			
24A34-29	15-35 secs	25-55 secs	$47.80
ONE TIMING - DOUBLE POLE			
24A34-21	1-20 secs	1-50 secs	$47.80
24A34-22	15-45 secs	1-30 secs	$47.80
24A34-23	25-55 secs	15-45 secs	$47.80
24A34-24	30-70 secs	1-40 secs	$47.80
24A34-25	40-90 secs	1-30 secs	$47.80
TWO TIMINGS - DOUBLE POLE			
24A34-26	1-20 secs	40-90 secs	$68.00
	30-90 secs	1-30 secs	
24A34-36	1-20 secs	45-110 secs	-
	30-45 secs	1-30 secs	
THREE TIMINGS - 2 RELAYS ON PLATE			
24A34-27	1-160 secs	1-160 secs	$71.80
24A34-28	1-160 secs	1-160 secs	$74.60
24A34-37	1-110 secs	1-110 secs	$69.70

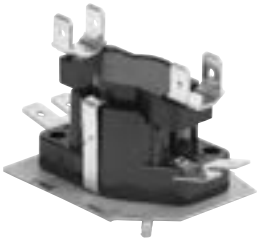

GAS VALVES
WHITE-RODGERS

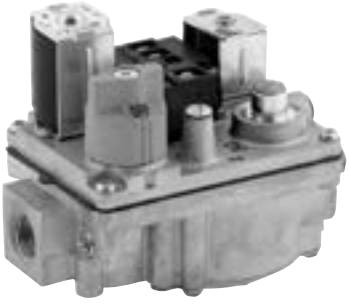

36E93-304



36H32-423

Part #	Description	LIST
36C03-258-EME	Standing pilot, fast opening, nat, 230,000BTU, 3.5" W.C., 1/2" x 1/2" inlet/outlet size, 24 VAC, line interrupter, has E.C.O. terminals	$454.00
36C84-912-EME	Cycle Pilot, 24 VAC 60Hz, Stage fast opening, 3/4"x3/4" Pipe size, 3.5" Regular Setting	$901.00
36C84-926-EME	Cycle Pilot, 24 VAC 60Hz, Stage fast opening, 3/4"x3/4" Pipe size, 3.5" Regular Setting	$914.00
36C94-906-EME	Cycle Pilot, 24 VAC 60Hz, Stage fast opening, 3/4"x3/4" Pipe size, 3.5" Regular Setting	$898.00
36H32-423-EME	Universal 3/4" x 3/4" includes reducer bushings & L.P. conversion kits, with side taps	$587.00

FAN/BLOWER CONTROLS CAM-STAT

Dual Voltage Pilot Reigniter

Protects a gas pilot flame from extinguishing. This lights a standing pilot by highly intense electrical sparks, provided that gaseous fuel (LPG, Natural Gas, etc.) is available. If the pilot flame goes out, sparks immediately relight the pilot. Sparking stops as soon as the pilot flame is re-established. Automatic & trouble-free.
Ambient Temperature: -40°F to +175°F
Recommended Spark Gap: 1/8 in. to 1/4 in. (.125 to .250)
Current Drain: 75 milliamperes max. (sparking)
High Voltage Lead: 24 inch length

Model Number	Power Input	Description	LIST
PR-24/120-36W	24/120 VAC	Hardware Kit, Spark Cable & Module	$198.10



Time Delay Relay S106 Series

Ambient compensated 0° to 200°F. This Time Delay Relay is a device for use in controlling high current blowers, relays and contactors at a predetermined time interval after the heater is energized. The heater timer is connected to a 24 volt circuit and this circuit may be energized remotely by a manual switch, room thermostat or some other automatic electric contacting device.

Model Number	Switch Action	Timing in Seconds		LIST
		Delay on Make	Delay on Break	
S106-1A45-75C	SPST	30-50	60-90	$215.50
S106-1A50-40C	SPST	45-55	30-50	$224.10
S106-1A55-60C	SPST	50-60	45-75	$224.10
S106-1A40-100	SPST	35-45	80-110	$224.10
S106-1B65-45C	SPDT	60-70	45-75	$215.50

Electrical Rating: Time Delay Heater - 0.12 amps at 24 VAC



COMBINATION FAN/LIMIT CONTROLS

CAM-STAT

L-59 Series with SPDT Switches



These limit controls have SPDT switches that incorporate a fixed temperature setting. Consult factory for fixed settings. Pilot Duty: N.C. Contacts: 40 VA at 30, 120 and 240 VAC, N.O. Contacts: 120 VA at 30, 120 and 240 VAC.

Model Number	Extension Length	Fan / Temp. Off	LIST
L59-3B-A	3"	120° to 250°	$122.50
L59-7B-A	7"	120° to 250°	$127.40

FAL Series for Universal Replacement



Universal replacements for application in all types of forced air heating furnaces. The fan portion incorporates an adjustable fan "OFF" setting and an adjustable differential to enable the installer to match the settings of the old device being replaced.

Model Number	Element Length	Fan Off Temp	Fan On Temp	Limit Temp	Fan/Limit Differential	LIST
FAL3C05TD120A	3"	90° to 120°	25° to 50°	150° to 250°	30°	$258.60
FAL7C05TD120A	7"	90° to 120°	25° to 50°	150° to 250°	30°	$268.90

FA47TS Series with Time Start Fan Control



Replaces all F47TS series controls. Fan controls with a built-in "heat assist" timer. The time delay turns on the blower as a function of time and/or temperature after the room thermostat calls for heat and turns off the blower as a function of temperature at the indicated dial setting.

Model Number	Extension Length	Time Delay at 24 VAC	Fan Off Temp	Fan/Limit Differential	LIST
FA47TS3-110	3"	25-60 sec.	80° to 110°	60° Fixed	$297.20
FA47TS7-110	7"	25-60 sec.	80° to 110°	60° Fixed	$285.80

FALTS Series with Time Start Delay



Include a time start fan control ("heat assist"). The time delay turns on the blower as a function of time and/or temperature after the room thermostat calls for heat and turns off the blower as a function of temperature at the indicated dial setting of the fan. The limit portion will limit the temperature of the furnace to a safe operating temperature. A limit temperature adjustment is provided to match the setting of the old device being replaced. Electrical rating: Timer ("Heat Assist"): 0.08 amps at 24 VAC.
Pilot Duty: 40 VA at 30 VAC & 120 VAC

Model Number	Element Length	Fan Off Temp	Fan On Temp	Limit Temp	Fan/Limit Differential	LIST
FALTS57C05T120A	7"	90° to 120°	N/A	150° to 250°	30°	$307.00
FALTS57C65T120A	7" w/shield	90° to 120°	N/A	150° to 250°	30°	$307.00
FALTS57C13BT120A	7" SPDT	90° to 120°	N/A	150° to 250°	30°	$307.00

F47 & F214 Series with Adjustable Temperature Dial



Incorporate an adjustable temperature dial to enable the installer to match the setting of the device being replaced.

Model Number	Extension Width	Length	Time Delay at 24 VAC	Fan Off Temp	Fan/Limit Differential	LIST
F47-3TD-120-25C	7/16"	3"	N/A	90° to 120°	25° to 45°	$240.40
F47-7TD-120-25C	7/16"	7"	N/A	90° to 120°	25° to 45°	$240.40
F214-12A-140-25C	1-1/16"	3"	N/A	60° to 140°	25° to 45°	$240.40
F214-13A-140-25C	1-1/16"	7"	N/A	60° to 140°	25° to 45°	$250.00

DEFINITE PURPOSE CONTACTORS

MARS


61730

1 Pole with JumperWire, 25 – 40 Amps

Part(Furnas) #	MARS #	F.L.A.	Locked Rotor AMPS				Non Inductive AMPS	Coil Volts	LIST
			240V	277V	480V	600V			
45EG10A-JA	61320	30	180	180	150	120	40	24	$56.40
45EG10A-FA	61321							120	$56.40
45EG10A-GA	61322							240	$58.00
45GG10A-JA	61730	40	180	180	150	120	50	24	

2 Pole, 20 – 40 Amps

Part(Furnas) #	MARS #	F.L.A.	Locked Rotor AMPS				Non Inductive AMPS	Coil Volts	LIST
			240V	277V	480V	600V			
45EG20A-J	61345	30	-	180	135	110	40	24	$54.80
45EG20A-F	61346							120	$54.80
45EG20A-G	61347							240	$54.80

3 Pole, 75 – 150 Amps

Part(Furnas) #	MARS #	F.L.A.	Locked Rotor AMPS			Non Inductive AMPS	Coil Volts	LIST
			240V	480V	600V			
42FE35A-J	61480	75	450	375	300	93	24	$732.00
42FE35A-F	61481						120	$732.00
42FE35A-G	61482						240	
42GE35A-J	61490	90	540	450	360	120	24	$1,009.00
42GE35A-F	61491						120	$1,009.00
42GE35A-G	61492						240	$1,003.00'

3 and 4 Pole, 25 – 60 Amp

Part(Furnas) #	MARS #	F.L.A.	Locked Rotor AMPS			Non Inductive AMPS	Coil Volts	LIST
			240V	480V	600V			
3 Pole								
42BF35A-J	61430	30	180	150	120	40	24	$113.20
42BF35A-F	61431						120	$113.20
42BF35A-G	61432						240	$113.20
42CF35A-J	61445	40	240	200	160	50	24	$121.80
42CF35A-F	61446						120	$121.80
42CF35A-G	61447						240	$121.80
42DF35A-J	61460	50	300	250	200	63	24	$352.00
42DF35A-F	61461						120	$352.00
42DF35A-G	61462						240	$352.00
42EF35A-J	61470	60	360	300	240	75	24	$369.00
42EF35A-F	61471						120	$369.00
42EF35A-G	61472						240	$369.00
4 Pole								
EX9CK40A40B7	EX9CK40A40B7	40	240	200	160	50	24	
EX9CK40A40G7	EX9CK40A40G7						120	
DP-4P40A240	DP-4P40A240						240	$114.70

DEFINITE PURPOSE CONTACTORS
MARS / SIEMENS

Field Modification Kits

Snap-On Side Mounted Auxiliary Interlocks



49ACRO/C/6/7/8

Model No.	Furnas No.	Class	Description	Contractor F.L.A.	LIST
MARS					
61610	49ACR0-MAR	42	1 NO	30-60	$61.50
61611	49ACRC-MAR		1 NC		$61.50
61612	49ACR6-MAR		1 NO- 1 NC		$108.00
61613	49ACR7-MAR		2 NO		$170.60
61614	49ACR8-MAR		2 NC		$170.60
61615	49D36098001		SPDT		-
61616	49D36098003-MAR		DPDT		$124.60
61623	MARS, 75-90		SPDT	75-90	-
61624	MARS, 75-90		1 NO		-
61625	MARS, 75-90		1 NC		-
SIEMENS					
	49D57071001-SIE	Contactor DIN Rail Mounting Kit up to 60 amp			
	49D57071002	Contactor DIN Rail Mounting Kit up over 75 amp			

UNIVERSAL DEFROST TERMINATION THERMOSTATS

Low Ambient Control

Opens at 45°F, closes at 55°F; prevents compressor from starting at low outdoor temp. Ideally mounted in outdoor condensing unit & wired to low voltage control circuit.



Part #	LIST
20601-ECO	$24.60

Universal Defrost Termination Thermostats

Individually packaged • Mounting clips available if required • 24" lead length



Part #	Description	LIST
SL243-SUP	surface clip	$9.70
SL249	push in clip	$9.70
7075819	Bohn curved to fit on pipe c/w clip	$187.80
ML45	°Diff. 20, Open°F 45, Close°F 25	$12.50
ML50	°Diff. 20, Open°F 50, Close°F 30	$12.50
ML55	°Diff. 20, Open°F 55, Close°F 35	$12.50
ML60	°Diff. 20, Open°F 60, Close°F 40	$12.50
ML70	°Diff. 20, Open°F 70, Close°F 50	$12.50
ML80	°Diff. 50, Open°F 80, Close°F 30	$12.50
AE1C-1	evaporator anti-ice control	$18.20

DEFROST TIMERS

Adjustable Defrost Timer

Adjustable defrost frequency 4 to 12 Hours. Adjustable defrost time 10 to 35 mins. Standard size & mounting to fit most Applications.



Part #	Voltage	Max. Compressor Rating	Max. Resistive Load	LIST
EDT10	120	1/3 HP	10 Amp	$87.30
EDT20	208/240	1/3 HP	5 Amp	-
EDT11	120	3/4 HP	20 Amp	$87.30
EDT21	208/240	3/4 HP	20 Amp	$94.30

Exact Replacement Defrost Timers

Exact OEM Features.
Replaces **Admiral 55467-1**

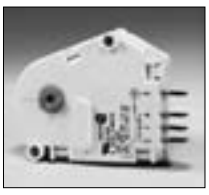

Part #	Defrost Freq (Hrs)	Defrost Time (Mins)	LIST
SPA1401AD	6	21	$23.60
SPG1401GE	6	25	$23.60

SURGE PROTECTOR & COMPRESSOR DEFENDER

INTERMATIC / GRASSLIN

AG3000 HVAC Surge Protection



Connects to the furnace/air handler disconnect to protect high-efficiency furnaces, hydronic heating systems, and ductless mini-splits from surges and spikes.

- 120/240 VAC Single Split Phase SPD for use on a variety of HVAC Equipment
- Green LED:Protection Indicator
- Unmatched Surge Protection Ratings
- Only HVAC Surge Protector that is both Type 1 and Type 2 compatible
- Meets all UL1449 3rd Edition Standards
- Type 4x Enclosure
- 18 in. 10 Gauge Leads
- State-of-the-art TPMOV® technology

Specifications:

Model #	Description	Service Voltage VAC	SPD Type	Nominal Discharge Current	Max. Continuous Operation Voltage	Short Circuit Current Rating	Enclosure	LIST
AG3000	**HVAC Surge**	**120/240**	**2**	**10kA**	**L-N/G: 150V, L-L: 300V**	**20kA**	**Type 4x**	$206.10

CD1-024R Compressor Defender™



Installs onto the AC disconnect to protect compressors and circut boards in residential and light commercial, central AC and heat pump considering unit applications from surges, brownouts, and short cycles.

- Surge, brownout, and short cycle protection with 120, 208, and 240 VAC loads
- LED indicators provide real-time status updates for quick and easy troubleshooting
- For use inside condensing units or externally on disconnects
- Complies with ANSI/AHRI Standard 110-2012 Range B² for voltage drop protection
- Auto-sense voltage technology 120-240 VAC universal input voltage
- Meets ANSI/UL 1449 3rd edition requirements
- Type 3 weatherproof and UV resistant enclosure
- State-of-the-art TPMOV® technology

Specifications:

Model #	Description	Service Voltage VAC	SPD Type	Nominal Discharge Current	Max. Continuous Operation Voltage	Short Circuit Current Rating	Enclosure	LIST
CD1-024R	**Brownout, Surge, And Short Cycle Protection**	**120/240**	**2**	**10kA**	**L-N/G: 150V, L-L: 300V**	**20kA**	**Type 3 Outdoor**	$363.00

Thermostat Relay	Control Output	Undervoltage Response Time	Short Cycle Delay	Undervoltage Protection ANSI/AHRI Standard 110-2012		
				120	208/230	240
N/C 24VAC	**2A @ 24VAC N/C**	**3 Line Cycles**	**3 Min.**	104	180	208

SURGE PROTECTOR & COMPRESSOR DEFENDER

INTERMATIC / GRASSLIN

IG2240-IMS Surge Protector

The IG2200 Series Surge Protective Devices with Consumable Modules utilizing TPMOV® technology can be easily and safely replaced by the end user as needed. No longer does the entire hardwired unit need to be replaced once the TPMOV has been sacrificed. The IG 2200 Series has been designed for a variety of Type 1 and Type 2 applications. Type 1 applications include outdoor installations before service entrances and utility meter cabinets. Type 2 applications include installations after service entrances. ANSI/UL 1449 3rd edition and UL Listed, the IG Series is approved for residential/light commercial services.



- Module Power Switch (on select models)
- Consumable Modules can be easily and safely replaced by end user
- Tamper proof Consumable Module Doors
- Power and Protection Status LEDs
- Type 1 or Type 2 applications
- 120, 240 VAC Single Phase
- 6 Modes of Surge Protection (L1-N, L2-N, L1-G, L2-G,N-G, L1-L2)
- Indoor applications
- Metal Housing
- 10-Year limited product warranty
- $25,000 Connected Equipment Coverage Warranty for 10 years on Appliances and Electronics

Specifications

Model No.	Description	SPD Type	No. of Phases	Mode	VPR (Vpk)	MCOV (V)	In (kA)	SCCR (kA)	LIST
IG2240-IMS	Metal Housing; 1/Indoor Service Voltage: 120, 240 VAC 6 Modes of Protection (L1-N, L2-N, L1-G, L2-G, N-G, L1-L2)	1 or 2	Single Phase	L-L L-N L-G N-G	1500 800 1500 700	300 150 300 150	10	10	$973.00

MULTI FUNCTION TIME CONTROLS

INTERMATIC / GRASSLIN

DTAV 40 Series

The DTAV is applicable to air defrost (compressor shutdown) and in electric or hot gas defrost systems where the defrost is terminated by the timer or when the coil is frost free, as sensed by a temperature or pressure switch, even though the programmed defrost termination time has not been reached. The time termination functions as a fail-safe and will terminate the defrost if the temperature or pressure switch fails to do so.

- Multivoltage field adjustable for 120 or 240V
- Real-time clock face
- Red or green LED lights indicate defrost or run cycle
- Captive trippers can't be lost
- Independently adjustable trippers allow for full or partial defrost cycles
- Nema 3R outdoor enclosure standard
- Existing board easily retrofits into competitive enclosures



Specifications:

Switch Rating: 40A Resistive @ 208-250VAC
2HP @ 208-250VAC; 1HP @ 125VAC
690VA pilot duty @ 125-250VAC
"F" Terminal: 10A Resistive @ 208-250VAC
1HP @ 208-250VAC; 1/2HP @ 125VAC

Time Initiated, Remote Temperature, Pressure, or Time Terminated
Add "-M" for Mechanism only. Add "-P" for Panel Mount (less enclosure)

Model Number	Dual Voltage	Timer	Battery Backup	Defrost Frequency No./Day	Defrost Duration	Min. Duration Interval	LIST
DTAV40	120V through 240V	Synchronous	No	1 to 24	15 to 180 min.	15 minutes	$366.00

NOTE: This Single Time Clock Replaces Every 8000 Series Time Clock Paragon Makes

GM MultiVolt Series

One time switch for four voltages
120, 208/240, 277VAC

- 24 hour and 7 day models
- 40A, 2 HP @ 240V switch
- 15 minute switch interval
- Captive trippers can't be lost
- Authentic clock face timer - easy to set
- On/Off/Auto override switch
- Battery backup available



Specifications:

Switch Rating: SPDT and DPDT switch models

NO Contacts
40A general purpose/res @ 277V
1 HP; 96ALR, 20AFL @ 120V
2HP; 72ALR; 12AFL @ 240V
15A, 1800W Tungsten @ 125V
5A, 1250W Tungsten @ 250V
20A Ballast @ 120-277V
1A pilot duty @ 120-240V
20A resistive @ 28VDC

NC Contacts
15A general purpose/res @ 250V
6A general purpose/res @ 277V
1/4 HP @ 125V, 1/2 HP @ 250V
3A, 750W Tungsten @ 125-250V
3A Ballast @ 120-277V
1A pilot duty @ 120-240V
15A resistive @ 28VDC

Note: If loads are connected to both NC and NO contacts, both contacts are derated to 67% of the above values.

Model Number	Dual Voltage	Switch	Amps	Timer	LIST
GM40AV	120V through 240V	DPDT	40	24 hour/synchronous	$257.70

**** Both DTMV and GM40 are available with Auto Multi-Voltage Control***

TIME CONTROLS

INTERMATIC / GRASSLIN

MIL 72 Series



*** 24 hour or 7 day**
*** Synchronous drive or quartz drive with battery backup**
*** 21 A SPDT switch**
*** Captive trippers with interval as low as 15 minutes**
*** With 3-way override**

- Captive Trippers are easy to set, can't be lost
- Up to 48 (24 hr.) or 42 (7 day) on/off events
- Surface, flush (panel) or DIN rail mounting
- Synchronous drive for greatest accuracy and lowest cost
- **"Q" Model numbers** have 7 day rechargeable battery backup (Quartz Drive).
- Three-way OFF/AUTO/ON override switch provides continuous override

Part # (input voltage)	Switch Program	Min. On/Off Time	Max. On/Off Events/Wk.	Manual Override	Switch Rating 250V. Res	Tripper Type	Reserve Carry-Over	LIST
MIL 72A STUZH (24/120)	24 hr.	15 min.	48	✓	SPDT 21A	Captive		$179.80
MIL 72A QTUZH (24/120)	24 hr.	15 min.	48	✓	SPDT 21A	Captive	7 days	$274.30
MIL 72A SWUZH (24/120)	7 day	2 hr.	42	✓	SPDT 21A	Captive		$331.00
MIL 72A QWUZH (24/120)	7 day	2 hr.	42	✓	SPDT 21A	Captive	7 days	$511.00

Digi 20 Series



*** 24 hour or 7 day programming with accuracy to the second**
*** Easy programming**
*** Selectable blocks of weekdays or weekends for quick programming**
*** Automatically recharged NiCad battery**
*** Manual override**

Channels: 1
Programs: 20

Holiday Program: No
Reserve Carryover; min.: 1 week

Automatic Spring/Fall Daylight Time Changeover: No

Part Number	Mounting	Setpoint Programs	Max. Weekly ON/OFF Events	Relay Output Resistive Rating	LIST
DIGI20A-120V	surface or DIN rail	20	140	SPDT, 16A	
FM1D20A-24	surface or DIN rail	20	140	SPDT, 16A	$383.00

FM/1 Series



*** 24 hour or 7 day**
*** Authentic clock face**
*** Synchronous / Quartz drive**
*** 21A SPDT switch**
*** 3 way override switch**
*** Small size, ideal for OEM applications**

- Captive trippers are easy to set, can't be lost
- Quartz drive provides 7 day carry-over
- Synchronous drive for greatest accuracy

Part # * (input voltage)	Switch Program	Carry-over	Program On/Off Every	Minimum On/Off Time	Type	Rating	LIST
FM1STUZH (24/120)	24 hr.	No	15 min.	15 min.	SPDT	21 A Res.	$162.50
FM1SWUZH (24/120)	7 day	No	2 hours	2 hours	SPDT	21 A Res.	$204.70
FM1QTUZH (24/120)	24 hr.	7-day	15 min.	15 min.	SPDT	21 A Res.	$322.00
FM1QWUZH (24V120)	7 day	7-day	2 hours	2 hours	SPDT	21 A Res.	$348.00

ELECTRONIC TIME CONTROLS

INTERMATIC / GRASSLIN

FM2D50-120

The FM2D50-120 2-Channel Electronic Time Switch is a compact, 24-Hour/7-Day module with heavy-duty relay contacts for switching low or line voltage loads. The timer is applicable for time-of-day control of pumps, fans, heaters, HVAC control circuits, lighting, machinery, and many other types of commercial, industrial, and agricultural equipment.



- 24-Hour or 7-Day applications
- Auto Daylight Saving Time (DST) feature
- 50 setpoint programs
- 2 preset adjustable block programs
- Surface/Flush mount, DIN Rail
- Manual override with load switch indication
- Battery Backup
- Large LCD
- Easy-to-follow menu driven programming
- Available in English, German, French, Italian, Spanish, Portuguese, and Dutch

Part #	Volts AC	Num of Circuits	Switch Rating	Programs	Mounting	LIST
FM2D50-120V	120 VAC, 50/60 Hz	2	2xSPDT, 16 Amp	50	Flush or Surface	$748.00

DIGI 322 Series

*** Year / week and day programmable**
*** Auto leap year and daylight savings adjustment**
*** 322 programs, up to 161 block holiday schedules**
*** Rechargeable battery backup - 7 day carry-over**
*** 16A SPDT switch rating**
*** Momentary contact programmable from 1 to 59 seconds on or off**



- Simple, flexible programming of up to 322 programs on up to 4 channels, fits any application
- Large LCD displays year, date, day, time, and load status
- Surface of DIN rail mounting
- Temporary override, and continuous On/Auto/Off override switches for each channel
- Automatically recharged NiCad battery maintains program and display for up to one week

THERMO/MOTORS
667-719

DEFROST CONTROLS
PARAGON

8040 Series Defrost Controls



- Frequency of defrost initiation is adjustable from one to six cycles per day. Minimum of four hours between successive operations
- Duration of defrost cycle adjustable from four to 110 minutes in two minute increments
- Accuracy of defrost duration +/- two minutes
- Choice of four contact arrangements for electric heat, hot gas or compressor shutdown defrost
- Positive switch action slider bar
- Switch rating per pole: 40 amps, 2 hp per pole; 690 VA pilot duty 120-240 volts AC

Model Number	Volts 60 Hz	Description	Switch Arrangement Contacts			Adj. Length of Defrost	LIST
			2-4	1-3	3-N		
8041-00	120	For Electric Heat Defrosting (Auxiliary Contact Models)	Closed	Open	Closed	4-110 min.	$408.00
8041-20	208-240						$408.00
8043-00	120	For Hot Gas Defrosting	Open	Open	None	4-110 min.	-
8043-20	208-240						-
8045-00	120	Elec.Heat, Hot Gas or Compressor Shutdown Def.	Closed	Open	None	4-110 min.	$386.00
8045-20	208-240						$386.00
8047-00	120	For Electric Heat Defrosting (Auxiliary Contact Models)	Open	Open	Closed	4-110 min.	-
8047-20	208-240						$395.00

8140 Series Defrost Controls

- Frequency of defrost is one to six cycles per day. A minimum of four hours between successive defrost cycles
- Adjustable back-up defrost termination from four to 110 minutes in two minute increments
- Control works with an external temperature or pressure sensor
- Choice of three contact arrangements for electric heat, compressor shutdown or hot gas defrost
- Positive switch action slider bar
- Switch ratings per pole: 40 amp, 2 hp, 690 VA pilot duty, 120-240 volts AC



Model Number	Volts 60 Hz	Normal Position of Contacts During Refrigeration Cycle			LIST
		2-4	1-3	3-N	
8141-00	120	Closed	Open	Closed	$403.00
8141-20	208/240	Closed	Open	Closed	$403.00
8143-00	120	Open	Closed	Open	$395.00
8143-20	208/240	Open	Closed	Open	$408.00
8145-00	120	Closed	Open	None	$382.00
*8145-20	208/240	Closed	Open	None	$382.00

DEFROST CONTROLS
PARAGON

Universal ELECTRONIC Defrost Timers Multi-voltage 120/208/240 VAC



Paragon's new multi-function time/temperature/pressure defrost timer control is the one time clock you will want for your service trucks stock, it will fit into your exciting 8145 paragon time clock box so you don't have to replace the existing box and with the dual voltage function it has all your requirements covered.

Features include:

- Back light display for visibility
- System status indicator led's
- Manual defrost switch (initiates 15 min. manual defrost)
- Display shows defrost start time and duration
- Easy set up of time, defrost start & stop times
- Direct connect line voltage & 100 hrs. Power loss protection of both schedule & time.
- Tested to 30,000 cycles, at 4 cycles per day that 20 years.

General info:

120/208/240VAC
Power consumption 6VA max.
C-UR-US Agency Approved

Part #	Description	LIST
9145-00	Time initiate/Temperature, Pressure Terminated Defrost Timer with Metal enclosure	$579.00
9045-00	Time initiate/ Time Terminated Defrost Timer with Metal enclosure	$579.00

8240 Series Defrost Controls

- Frequency of defrost is one to six cycles per day. A minimum of four hours between successive defrost cycles
- Adjustable back-up defrost terminationk from four to 110 minutes in two minute increments
- Positive switch action slider bar
- Choice of three contact arrangements for hot gas, electric heat or compressor shutdown defrost
- Switch ratings per pole: 40 amp, 2 hp, 690 VA pilot duty, 120-240 volts AC
- All models have adjustable cut-in pressure setting dial calibrated from 36-110 pounds for R12, R22, R502



Model Number	Volts 60 Hz	Normal Position of Contacts During Refrigeration Cycle			LIST
		2-4	1-3	3-N	
8245-00	120	Closed	Open	None	$1,363.00
8245-20	208-240	Closed	Open	None	$1,363.00
8247-20	208-240	Open	Open	Closed	$1,433.00

REVERSIBLE SKELETON MOTORS







Part #	H/P	Volts	RPM	SPD.	AMPS	Rot.	Stack	Shaft
UEFM-1	1/500	115	2600		0.22	CCW	0.38	1.5" X 1/8"
K114	1/500	120	1100	1	0.74	CW	0.5	.1811" X 1.75"
K102	1/500	120	1100	1	0.57	CW	0.5	.1811" X 1.5"
GEFM-1	1/350	115	2600		0.30	CW	0.5	1.5" X 1/8"
K120	1/260	120	3000	2	.50 - .29	CW	0.5	.2178 X 1.55
WIFM-1	1/250	115	3000		0.4	CCW	0.38	1.5" X 1/8"
R617	1/230	208/230	1900	1	0.2	CW	0.4	.1811" X 1.1"
R611	1/215	115	1500	1	0.5	CCW	0.55	.1811 X 1.7"
K628	1/200	208/230	3000	1	0.25	CW	0.75	.25 X 1.60"
R670	1/130	115	3000	1	0.45	CW	0.65	3/16 X 1.3"
R603	1/110	115	2400	1	0.45	CCW	0.65	7/32 X 2.2"
K614	1/150	120	3000	1	0.59	CW	0.5	.2178 X 1.65"
K673	1/150	120	3000	2	.51 - .27	CW	0.62	.1875 X 1.30"
R3670	1/150	115/230	3000	1	.45 - .25	CW	0.63	3/16 x 1.5"
K672	1/150	240	3000	1	0.29	CCW	0.62	.1875 X 1.30"
R3100	1/130	115	3000	1	0.5	CCW	0.65	7/32 X 1.7"
R606	1/130	115	3000	1	0.5	CW	0.65	7/32 X 1.1"
R613	1/125	115	1600	1	0.5	CCW	0.65	7/32 X 2.5"
K111	1/120	120	3000	1	0.82	CCW	0.5	.2178 X 1.97
K683	1/100	240	3000	1	0.3	CW	1	.1875 X 1.30"
K100	1/100	120	2750	1	0.73	CW	0.62	.1811 X 1.05"
R604	1/90	115	2700	1	0.9	CCW	0.65	.181 X 1.2"
R601	1/80	115	3000	1	0.7	CCW	0.9	1/4 X 2.2"
R3101	1/80	115	3000	2	0.7	CW	0.98	7/32 X 1.6"
K109	1/75	115	3000	1	0.77	CCW	0.75	.2178 X 2.37
K113	1/70	120	3000	1	0.9	CCW	0.75	2178 X 1.19
K612	1/65	120	3000	1	0.73	CW	1	.25 X 2.70"
R1014	1/65	115	3000	1	0.7	CCW	0.88	3/16 X 1.1
R635	1/40	208/230	1700	1	0.8	CCW	1.5	1/4 X 1.5"
R605	1/55	115	2800	1	0.85	CCW	0.9	.1811 X 1.7"
R610	1/50	115	2400	1	0.9	CCW	0.9	7/32 X 1.2"
R607	1/35	115	2300	1	1.1	CW	1.15	7/32 X 1.7"
ACME7502	1/45	110/220	3000	1	1.1 - .55	REV	1.125	ADAPTABLE

*Humidifier Motor
R670 - c/w two fan blades
R3670 - two fan blades & mtg kit
RF100-2 - c/w bracket & blade
R3100 - c/w fan blade

Please contact your local branch for more information and pricing

3.3" DIAMETER MOTORS

ROTOM

Totally Enclosed • Single Shaft • Sleeve Bearing • Shaded Pole

Typical Applications: Dehumidifiers, Electric Heaters, Fireplace Blowers, Humidifiers, Kitchen & Bathroom Fans

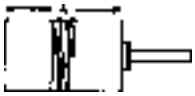

120 Volts • 1550 RPM

Part #		Amps	Shafts	A	Fig.	Comments	O.E.M.	LIST
CW	CCW							
R-503		0.40	1/4 x 2.4	1.94	1	Notched Shaft	Electrohome 2N4702	-
R-506		0.50	1/4 x 2.0	1.69	1	Grooved Shaft, Spades	2N8701, Nutone	$165.50
R-206		0.50	1/4 x 1.5	1.94	1	2 Speed Plug	Miami-Carey, Air King, B.D. Waite	$233.60
	R-222	0.70	1/4 x 1.2	2.00	2	Plug, Stud Mounting	Nutone, Air King	$159.60
R-207		0.72	1/4 x 1.5	1.94	2	Plug	Camco, Nutone 80100	$156.90
R-225	R-224	0.80	1/4 x 2.3	2.19	6	Stud Mounting	General Replacement	
R-209		0.85	1/4 x 1.5	2.19	2	Plug	Emerson, Nutone, Broan	$173.70
	R-203	0.90	1/4 x 1.5	1.94	2	Left Hand Thread-plug	Leigh, Can Arm., Nutone	$185.50
R-201		0.90	1/4 x 2.2	1.94	1	Spade Connector	Camco, Electrohome, Nutone	$159.70
R-208		1.0	1/4 x 2.0	2.70	2	18" Leads	General Replacement	$184.30
	R-450	1.35	5/16 x 2.6	4.30	5	Cooling Rings, Internal Fan	General Replacement	$185.40
R-219		1.60	5/16 x 2.2	2.69	2	Plug, Stud Mounting	Nutone 80405	$775.00
R-506	R-220	0.5	5/16 x 1.2	2.69	2	Plug, Stud Mounting	Leigh, Miami-Carey	$241.20

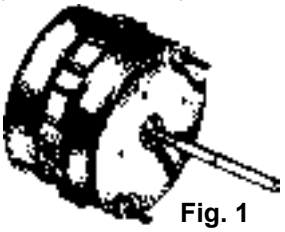

Fig. 1

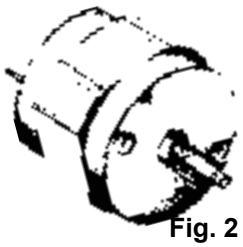

Fig. 2

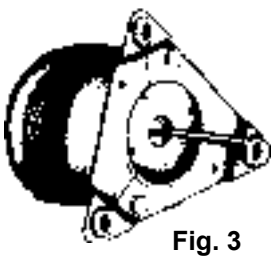

Fig. 3

115 Volts • 3000 RPM

Part #		Amps	Shafts	A	Fig.	Comments	O.E.M.	LIST
CW	CCW							
R305		0.85	1.5 X 1/4		A	Nutone	Cord and plug, 2800 REM	
	R307	1.10	1.3 x 1/4		B	Keeprite	Stud mounting	
	R312	1.20	4.0 x 5/16		C	Engineered Air 101322	P.S.C (4/370), Internal Fan, Ball Bearing, 3250 RPM	
	R334	2.30	1.5 x 1/4		D	Torin/Clare	Internal Fan	



Fig. 4

Fig. A R305



Fig. B R307



Fig. C R312



Fig. D R334



120 Volts • Two Speed • 1550 & 3000 RPM

Part #		Amps	Shafts	A	Fig.	Comments	O.E.M.	LIST
CW	CCW							
R-206		0.50	1/4 x 1.5	1.94	1	1550 RPM	Miami-Carey, B.D. Waite, Air King	$233.60
R-231	R-232	0.70	1/4 x 1.3	2.16	2	3000 RPM	Nutone	$251.10
	R-233	1.1	1/4 x 1.6	2.72	2	3000 RPM	Nutone	$164.80



Fig. 5

240 Volts • 1550 RPM

Part #		Amps	Shafts	A	Fig.	Comments	O.E.M.	LIST
CW	CCW							
	R-215	0.22	5/16 x 2.3	1.94	3	Triangle Bracket - 1200 RPM	Chromalox, Thermolec	$188.70
R-511		0.35	1/4 x 2.0	1.69	1	C-ring Groove	F.P.E., General, 2N8901	$221.80
	R-210	0.40	1/4 x 1.5	2.19	1	24" Leads	C.G.E., Caloritech	$181.40
R-217		0.45	1/4 x 1.3	2.44	2	Leads, Spades	C.G.E., F.P.E., Chromalox	$180.40

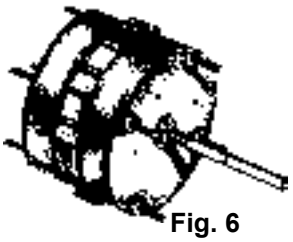

Fig. 6

Rotation determined by viewing opposite shaft end

3.3" DIAMETER MOTORS

ROTOM

Open Construction • Single Shaft • Sleeve Bearing • Shaded Pole

Typical Applications: Unit Coolers, Dehumidifiers, Display Cases, Humidifiers, Kitchen & Bathroom Fans

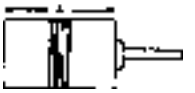

120 Volts • 1550 RPM

Part # CW	Part # CCW	Amps	Shafts	A	Fig.	Comments	O.E.M.	LIST
R-326		0.50	1/4 x 1.4	1.94	4	U-Bracket, 35" Leads	Blanchard-Bohn E1001, 2, 3	$289.80
R-309	R-308	0.70	1/4 x 2.3	1.94	8	Stud Mount	General Replacement	$225.60
	R-315	0.80	1/4 x 1.2	2.03	3	Plug,Hex Hubs,C-Ring Groove	Nutone 82598, 82599	
R-304		0.85	1/4 x 1.5	2.44	2	L-K Fitting	General Replacement, Nutone	$227.60
	R-319	0.90	1/4 x 2.2	1.94	6	Plug	Camco, Nutone	$234.40
R-360		1.00	1/4 x 1.6	2.50	5	3 Bolt Mount, Spades	Keeprite 504249	
R-357	R-356	1.80	5/16 x 2.3	2.69	8	Stud Mount	General Replacement	
	R-358	2.00	5/16 x 2.8	3.25	8	Stud Mount, Lyall Plug	Blanchard E1058, Keeprite 1043336	
R-355		2.10	5/16 x 1.9	3.14	3	Hex Hubs	Nutone 81918	$296.60

115 / 208 / 230 Volts

Part # CW	Part # CCW	Amps	Shafts	A	Fig.	Comments	LIST
R90721		1.10	5/16 x 3.15	3.62	10	PSC / Cap Inc.	$211.30

240 Volts • 1550 RPM

Part # CW	Part # CCW	Amps	Shafts	A	Fig.	Comments	O.E.M.	LIST
R-302		0.30	1/4 x 1.5	1.94	8	Leads, 4 Point Mount, Spades	Camco, F.P.E.	$174.60
R-130		0.80	5/16 x 1.5	2.69	4	Single Bracket, 35" Leads	Blanchard	$282.10
	R-340	0.85	5/16 x 2.0	3.03	2	Stud Mount	C.G.E. 198A6404	$317.00
	R-359	1.20	5/16 x 2.8	3.25	8	Stud Mount, Lyall Plug	Blanchard E1059, Keeprite 1043766	$163.20

120 Volts • 3000 RPM

Part # CW	Part # CCW	Amps	Shafts	A	Fig.	Comments	O.E.M.	LIST
R-305	R-307	1.04	1/4 x 1.3	2.91	6	Leads, Case Bolt Mount	Keeprite 85680, M & D	$360.00


Fig. 2


Fig. 3


Fig. 4


Fig. 5


Fig. 6


Fig. 7


Fig. 8

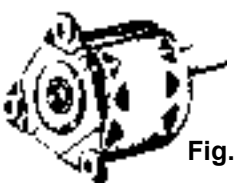
Fig. 9

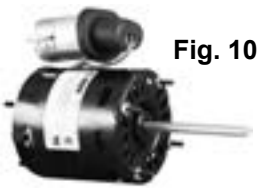
Fig. 10

Rotation determined by viewing opposite shaft end

AGITATOR MOTORS

Agitator Motors

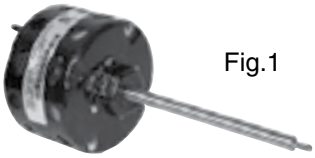

Fig.1

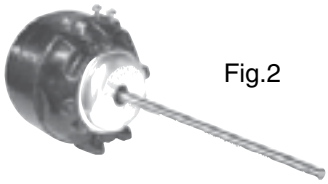

Fig.2

Part #	Amps	Volts	RPM	Body	Dia	Features	Comments	Fig
R6203	0.60	115	1550	3.50"	3.9"	Two Pin Plug	Cornelius 15W, QBD	2
R6208	0.60	115	1550	3.40"	3.9"	10" Leads	Habco C020943, 15W	2
R6204	1.10	115	1550	3.50"	3.9"	Two Pin Plug	Cornelius 25W, QBD	2
R6205	1.10	115	1550	3.50"	3.9"	Two Pin Plug, Drive Pin	Cornelius 25W, QBD	2
R6206	1.70	115	1550	3.50"	3.9"	1.125" Flat on Shaft	Cornelius 50W, QBD	2



Part #	H/P	Volt	AMP.	ROT, OSE	RPM	Shaft
D469	1/12	208/230	1.3	CW	1550	5/16x2.12
D475	1/15	460	0.5	CW	1550	5/16x2.5
D671B	1/15	230	1.2	CW	1550	5/16x1.5
D471	1/20	208/230	1.1	CW	1550	5/16x2.5
1332	1/20	208/230	1.1	CW	1550	5/16x2
D477	1/35	208-230	0.75	CW	1550	5/16x1.65

Please contact your local branch for more information and pricing

3.3" DIAMETER MOTORS

FASCO



FIG. A D1152, D1154, D1101, D1103

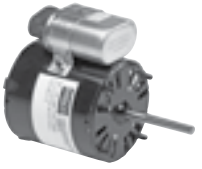

FIG. B D1102



FIG. C D1120, D1121



FIG. D D1124, D1126



FIG. E D1125



FIG. F D1142



FIG. G D1144



FIG. H D1164



FIG. I D1243, D1245

MODEL	TYPE	HP	VOLTS	RPM	SPD.	AMPS	ENCLOSURE	ROT.	BRNG.	SHAFT DIM.	"A" DIM.	FIG.
D1124	SP	1/20	115	1550	1	2.1	Open Vent.	CW	SLV	5/16 X 3	3	D
D1126	SP	1/15	208-230	1550	1	1.1	Open Vent.	CW	SLV	5/16 X 3	3 1/2	D
D1125	PSC	1/12	208-230	1550	1	0.5	Open Vent.	CCW	SLV	5/16 X 2 5/8	3 3/4	E
D1120	SP	1/20	115	1550	1	2.1	Open Vent.	CW	SLV	5/16 X 2 1/2	3 1/2	C
D1121	SP	1/20	208-230	1550	1	1	Open Vent.	CW	SLV	5/16 X 2 1/2	3 1/2	C
D1243	PSC	1/20	115	1550	1	0.8	Open Vent.	CCW	SLV	5/16 X 2 3/4	4 1/8	I
D1245	PSC	1/20	208-230	1550	1	0.3	Open Vent.	CCW	SLV	5/16 X 2 3/4	4	I
D1152	SP	1/20	115	1500	1	1.7	Open Vent.	CW	SLV	5/16 X 2 3/8	2 7/8	A
D1154	SP	1/20	230	1550	1	1	Open Vent.	CW	SLV	5/16 X 2 3/8	3 1/8	A
D1101	SP	1/20	115	1500	1	1.9	Open Vent.	CCW	SLV	5/16 X 2 1/4	2 3/4	A
D1103	SP	1/20	208-230	1500	1	1.15	Open Vent.	CCW	SLV	5/16 X 2 1/4	3	A
D1144	PSC	1/25 - 1/35 - 1/65	115	1200	3	1.1-.9-.6	Open Vent.	CW	SLV	3/8 X 5 3/8	4 3/4	G
D1142	SP	1/15	115/230	1500	1	1.7-.9	Open Vent.	CW	SLV	5/16 X 2 1/2	3 1/2	F
D1164	SP	1/25	115/230	1550	1	1.3-.65	Totally Encl.	CW	SLV	5/16 X 2 1/2	3 1/8	H
D1102	PSC	1/20	115/230	1550	1	.75-.4	Open Vent.	CW	SLV	5/16 X 2-5/8	3 1/2	B

AXIAL FANS

AC Cooling Fans

- die-cast aluminum housing • shaded pole motor with impedance protection
- metal or plastic impeller

80 x 80 x 38 mm (3.15 x 3.15 x 1.5") • 3100 RPM
Metal Impeller • Mounting Centres 71.5 mm (2.82")

Part #	Voltage	Air Flow	Power	Bearing	Noise	Connection	LIST
RF200	115VAC	32 CFM	10 W	Sleeve	38db (A)	Wire Leads	$171.30



120 x 120 x 38mm (4.72 x 4.72 x 1.5") • 3000 RPM
Metal Impeller • Mounting Centres 105 mm (4.13")

Part #	Voltage	Air Flow	Power	Bearing	Noise	Connection	LIST
RF205	115VAC	105 CFM	22 W	Sleeve	50db (A)	Terminal	$171.80
RF210	115VAC	105 CFM	22 W	Ball	50db (A)	Terminal	$201.90
RF215	230VAC	105 CFM	21 W	Sleeve	50db (A)	Terminal	$170.70
RF220	230VAC	105 CFM	21 W	Ball	50db (A)	Terminal	$201.90
RF225	115VAC	105 CFM	22 W	Ball	50db (A)	Wire Leads	$201.90



119 x 119 x 38 mm (4.69 x 4.69 x 1.5") • 2900 RPM
Plastic Impeller • Mounting Centres 105 mm (4.13")

Part #	Voltage	Air Flow	Power	Bearing	Noise	Connection	LIST
RF230	115VAC	105 CFM	14 W	Sleeve	44db (A)	Terminal	$118.40
RF235	115VAC	105 CFM	14 W	Ball	44db (A)	Terminal	$212.80



150 x 150 x 55 mm (5.9 x 5.9 x 2.2") • 3100 RPM
Metal Impeller • Mounting Centres 162 mm (6.38")

Part #	Voltage	Air Flow	Power	Bearing	Noise	Connection	LIST
RF240	115VAC	230 CFM	44 W	Ball	53db (A)	Wire Leads	$328.00
RF245	230VAC	230 CFM	44 W	Ball	53db (A)	Wire Leads	$328.00



254 x 254 x 89 mm (10 x 10 x 3.5") • 1650 RPM
Plastic Impeller • Mounting Centres 247 mm (9.72")

Part #	Voltage	Air Flow	Power	Bearing	Noise	Connection	LIST
RF250	115VAC	459 CFM	35 W	Ball	55db (A)	Terminal	$622.00
RF255	230VAC	459 CFM	33 W	Ball	55db (A)	Terminal	$622.00



AC Power Cord

Part #	Description	LIST
CFC-T24	24" cable	$17.20



DUCT BOOSTER FANS

ROTOM

In-Line Air Duct Booster Fans

Air Duct Booster

Designed to be installed at any angle in the branch duct of under-ventilated rooms to increase either hot or cool air flow supply. One year limited warranty.



Control Options

Manual Control
- 115V Source - continuous operation.
- 115V Switch - manual ON/ OFF ctrl.
- 115V Speed Control - variable ctrl.

Automatic Control
- Wire to furnace fan.
- Wire to fan switch.
- Wire to a sail switch.
- Wire to a pressure switch.
- Wire to thermostat.

Standard Air Duct Boosters

Part #	Description	Max Boosted CFM	Free Air CFM	Watts	Amps	dBA	Blade	Housing Length	LIST
DB-204C	4" Round	80	40	30	0.30	52	Aluminum	6"	$345.00
DB-205C	5" Round	225	140	30	0.35	51	Valox	6"	$353.00
DB-206C	6" Round	250	160	30	0.35	50	Polycarbonate	6"	$357.00
DB-208C	8" Round	500	210	60	0.75	54	Aluminum	8"	$426.00
DB-210C	10" Round	650	300	120	1.50	55	Aluminum	8"	$520.00
DB-212C	12" Round	800	650	120	1.50	55	Aluminum	8"	



DB6 Illustrated

Two Speed Air Duct Boosters

Part #	Description	Max Boosted CFM	Free Air CFM	Watts	Amps	dBA	Blade	LIST
DB-6-2	6" Round 2 Speed	200/300	100/160	30	0.35	50/52	Polycarbonate	$164.60
DB10-2	10" Round 2 Speed	650/900	300/460	135	1.70	56/59	Aluminum	$692.00



DB5-2 Illustrated

4-Pole Duct Boosters

Designed for larger ducts requiring commercial grade power and performance.

Part #	Description	Max Boosted CFM	Free Air CFM	Watts	Amps	dBA	Blade	LIST
DB-124E	12" Round	1160	700	120	1.50	61	Aluminum	
DB-144	14" Round	1580	900	140	1.75	61	Aluminum	$438.00



4-Pole Duct Booster Illustrated

3.3" DIAMETER MOTORS

ROTOM

Hubless Design

Open & Totally Enclosed • Sleeve & Ball Bearing • Shaded Pole • 120 & 240 Volts • 1550 & 3000 RPM



Fig. 1

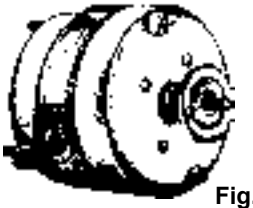

Fig. 2

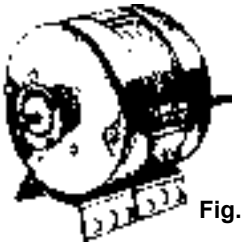

Fig. 3

Typical Applications:
Commercial Refrigeration, Walk-ins, Display Cases, Unit Coolers and Condensers

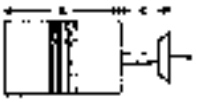

120 Volts • 1550 RPM

Part #		Amps	A	C	Fig.	Const.	Comments	O.E.M.	LIST
CW	CCW								
R-128		0.40	1.94	0.57	2	T.E.	3 Pt. Mtg., 3 Wire Lyall Plug	Coldstream	-
	R-108	0.55	1.94	0.67	3	T.E.	U-Bracket	Ideal	
R-137		0.55	2.19	0.57	2	T.E.	Lyall Plug	Coldstream	
R-123		0.66	2.44	0.55	3	T.E.	Double Bracket, Leads	Universal, Ideal	$301.00
	R-127	0.75	1.94	1.00	2	T.E.	Stud Mounting	Foster	$269.90
R-101L	R-103L	0.90	2.19	0.68	1	T.E.	same as above with leg mounting	Foster, Hussmann, 9 Watt	
	R-124†	1.60	2.78	0.88	2	T.E.	Ball Bearing, Lyall Plug	Dunham-Bush, 2-4 Point Mtg.	$176.10

120 Volts • 3000 RPM

	R-129	0.70	2.41	0.45	2	T.E.	Lyall Plug	Hill PP32032E	$170.80

240 Volts • 1550 RPM

	R-125‡	0.75	2.78	0.88	2	T.E.	Ball Bearing, Lyall Plug	Dunham-Bush, 2-4 Point Mtg.	$291.20

†0350044, 0350046, MM2847 ‡0350043, 0350045, MM2848

Rotation determined by viewing opposite shaft end

ELCO

- **SHADED POLE**
- **CONTINUOUS AIR OVER**
- **TOTALLY ENCLOSED**
- **21/23" LEAD LENGTH**
- **4 POLE**
- **NUTS, SCREWS AND FAN BLADEADAPTER INCLUDED**
- **ALL ANGLE MOUNTING**
- **1 FOOT, FRONT SHROUD or TAPPED REAR 3 HOLE**



	Part#	Watt	RPM	Volts	Amps	Rot.	Shaft Dia.	A(INS.)	B(INS.)	D(INS.)	H(INS.)	LIST
	EC4W115	4	1550	115	0.36	CCWSE	THD	2.82	0.49	1.65	0.51	-
	EC5W115	5	1550	115	0.04	CCWSE	THD	2.82	0.49	1.65	0.51	-
*	EC6W115	6	1550	115	0.41	CCWSE	THD	3.05	0.49	1.89	0.79	-
	EC6W230	6	1550	230	0.20	CCWSE	THD	3.05	0.49	1.89	0.79	-
*	EC9W115	9	1550	115	0.58	CCWSE	THD	3.05	0.49	1.89	0.79	-
	EC9W230	9	1550	230	0.35	CCWSE	THD	3.05	0.49	1.89	0.79	-
	EC16W115	16	1550	115	1.0	CCWSE	THD	3.6	0.63	2.44	1.18	-
	EC16W230	16	1550	230	0.50	CCWSE	THD	3.6	0.63	2.44	1.18	-
*	EC34W115	34	1550	115	1.6	CCWSE	THD	4.19	0.61	2.4	1.77	-
	EC34W230	34	1550	230	0.80	CCWSE	THD	4.19	0.61	2.4	1.77	-
#	EC34W115V1543*	34	1550	115	1.60	CCWSE	THD	4.19	0.61	2.4	1.77	-

* Suggested Stock * Ref Plus # Lyall Plug

51 FRAME UNIT BEARING MOTORS

ROTOM

Domestic & Commercial Refrigeration Motors

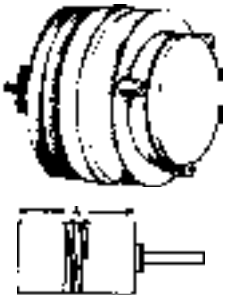

120 Volts • 3.3" & 3.5" Diameter • 1550 RPM

Part #		Watts	Amps	A	Comments	O.E.M.	LIST
CW	CCW						
R-5109		2	0.16	2.47	Aluminum Body, Unit Brg.	Domestic Refrigeration, 3.5" Diameter	$134.90
R-1211		2	0.25	1.69	3 Pt. Mount, Sleeve Brg.	Domestic Refrigeration, 3.3" Diameter	$198.00

Unit Bearing • High Efficiency • Cast Iron

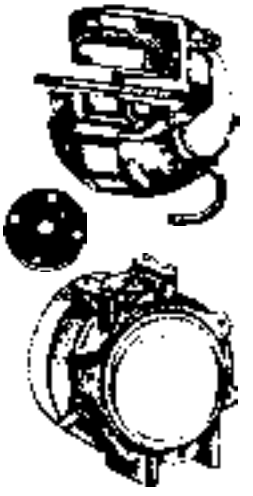

115 Volts • 3.5" Diameter • 1550 RPM

Part #		Watts	Amps	A	Comments	O.E.M.	LIST
CW	CCW						
R-5109		2	0.23	2.75	Pad or Leg Mount	Refrig. cond. fan	$221.80
	R-5212	4	0.29	2.58	Pad or Leg Mount	Tecumseh TFM41	-
R-5911		5	0.50	3.44	Plug Adapter w/Cord	Hill	$214.70
R5311	R-5312	6	0.36	2.83	Pad or Leg Mount	Tecumseh TFM61	$328.00
UB597		9	0.53	2.83	Pad or Leg Mount	Tecumseh TFM91	$123.30
R-5611	R-5612	9	0.66	3.07	Hayco Plug, Pad Mount	Hussmann case	$287.50
5R016		9	0.32			Replaces 9-12 watt	$229.90
UB567		16	1.10	3.03	Pad or Leg Mount	General Replacement	$167.50

208-230 Volts • 3.5" Diameter • 1550 RPM

R-5221	R-5222	4	0.14	2.58	Pad or Leg Mount	General Replacement	$209.50
	R-5421	9	0.29	2.83	Pad or Leg Mount	Tecumseh TFM92	-
UB569		16	0.55	3.03	Pad or Leg Mount	General Replacement	$153.90

Note: Motors may be converted to shaft type by using Shaft Adapter S8110

Electric Motor & Specialty • Unit Bearing • High Efficiency • Cast Iron



115 Volts • 3.8" Diameter • 1550 RPM

R-2011		23	0.80	3.75	Leads, Vertical Mount	C.V. Hill	$973.00
UB571		25	1.10	3.50	Leads	Tecumseh TFM191	$337.00
UB575		35	1.40	3.50	Leads	Tecumseh TFM351, Hussmann	$332.00

208-230 Volts • 3.8" Diameter • 1550 RPM

UB573		25	0.60	3.50	Leads, Ring Term's	General Replacement	$315.00
UB577		35	0.70	3.50	Leads, Ring Term's	TFM352, 810M035A-21	$332.00

115 Volts • 3.8" Diameter • 1550 RPM • Shaft Type



UB579		50	1.70	4.50	3/8" x 1.5" Shaft w/Flat	Copeland	$361.00

208-230 Volts • 3.8" Diameter • 1550 RPM • Shaft Type

R-3612		35	0.70	3.50	5/16" x 1.4" Shaft w/Flat	Tecumseh TFM362	$812.00
R-5112		50	0.85	4.50	5/16" x 1.4" Shaft w/Flat	Tecumseh TFM372	-
276		50	0.85	4.00	5/16" x 2.0" Rear Shaft	Tecumseh TFM502	-
UB581		50	0.85	4.50	3/8" x 1.5" Shaft w/Flat	Copeland	$361.00

Rotation determined by viewing opposite shaft end

UNIT HEATER MOTORS

FASCO

5.0" & 5.6" Diameter Unit Heater Motors

Totally Enclosed Construction • Air-Over

Fig. 1 

Fig. 2 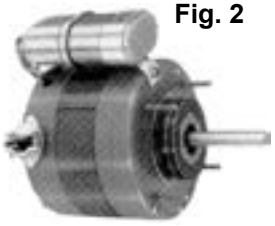

Fig. 3 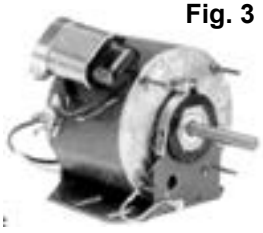

Fig. 4 

Fig. 5 

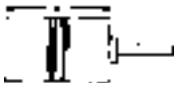

115 Volts

Part #	Dia.	A	Shaft Len. & Diam.	H.P.	Spd/RPM	Fig.	Amps	Rot'n	Type	LIST
978	5.0	3-1/8	3/8 x 3	1/20	1/1050	1	2.0	CW	S.P.	-
D261#	5.0	3-5/8	1/2 x 3	1/8-1/15	1/1075	2	2.3-1.1	Rev	P.S.C.	$753.00
D260#†	5.0	3-7/8	1/2 x 3	1/6	1/1075	2	2.9	CW	P.S.C.	$946.00
D736	5.6	4-1/4	1/2 x 3-1/4	1/6	1/1625	3	2.0	Rev	P.S.C.	$803.00
3206	5.6	4-1/4	1/2 x 3	1/6	1/1075	4	2.7	CW	P.S.C.	$589.00
136A	5.6	4-1/4	1/2 x 4-1/2	1/6-1/8	1/1075	5	2.5-1.8	Rev	P.S.C.	$856.00
UH1026V1	5.6	4-1/4	1/2 x 3-1/4	1/4	1/1075	3	3.8	Rev	P.S.C.	$756.00
UHM13B	5.6	4-3/4	1/2 x 5	1/3	1/1075	4	4.1	Rev	P.S.C.	$428.00
733A	5.6	4-1/2	1/2 x 6	1/2	1/1140	3	5.5	CW	P.S.C.	$897.00

† replacement for ITT Reznor
# 4M 370V capacitor included

Rotation determined by viewing shaft end

5.0" DIAMETER MOTORS

FASCO

Single Shaft

Open & Totally Enclosed Construction • Sleeve Bearing
Shaded Pole & Permanent Split Capacitor

Typical Applications: Unit Heater, Furnace, Condenser Fan

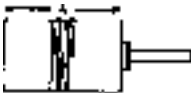



Fig. 8



Fig. 9

115/208-230 Volts

Part #	Cap.	A	Shaft Len. & Diam.	H.P.	Spd/RPM	Fig.	Amps	Rot'n	Type	Const.	Comments	LIST
D488	3/370	4.8	3-1/3 x 3/8	1/20	1/1550	8	1.2/.6	REV.	P.S.C.	OPEN	GE 2341, 2342, 2331, 2332	$545.00
D489	3/370	4.8	3-1/3 x 3/8	1/15	1/1550	8	1.2/.6	REV.	P.S.C.	OPEN	GE 2241, 2242, 2231, 2232	$521.00
D474	3/370	4.8	3-1/3 x 3/8	1/10	1/1550	8	1.9/.9	REV.	P.S.C.	OPEN	GE2141, 2142, 2131, 2132	$612.00
D492		4.6	3-1/8x 3/8	1/15	1/1050	9	3.4/1.7	CW	S.P.	OPEN	GE 2223	$494.00
608		4.6	3-1/8x 3/8	1/10	1/1050	9	5.0/2.5	CW	S.P.	OPEN	GE 2121, 2122	-
D495		4	3-1/8x 3/8	1/20	1/1050	9	3.0/1.6	CCW	S.P.	OPEN	GE 2311, 2312	-
D493		4.6	3-1/8x 3/8	1/15	1/1050	9	3.4/1.7	CCW	S.P.	OPEN	GE 2213	-
D491		4.6	3-1/8x 3/8	1/10	1/1050	9	5.0/2.5	CCW	S.P.	OPEN	GE 2113	$478.00

Rotation determined by viewing shaft end

5.6" DIAMETER MOTORS

Direct Drive Blower Motors

- Ideal for blowers and fans used in furnaces and air-conditioners
- 115 VAC
- Electrically reversible
- Thermally protected
- CSA certified
- All angle mount bearings





Part #	HP	RPM	Volts	Amps	Rot.	Shaft Dia.	Motor Dia
FDL1016	1/6	1075	115	2.7	REV	1/2"	5.5"
D721	1/4 - 1/5 - 1/6	1075	115	4.8	REV	1/2"	5.5"
D725	1/4 - 1/6 - 1/8	1075	208-230	2.2	REV	1/2"	5.5"
3471	1/4	1625	115	3.5	REV	1/2"	5.5"
D783	1/4	1625	208-230	1.5	REV	1/2"	5.5"
D727	1/3 - 1/4 - 1/5	1075	115	5.9	REV	1/2"	5.5"
D923	1/3 - 1/4 - 1/5	1075	208-230	2.9	REV	1/2"	5.5"
3994	1/3	1625	115	4.7	REV	1/2"	5.5"
3995	1/3	1625	208-230	2.1	REV	1/2"	5.5"
D701	1/2 - 1/3 - 1/4 - 1/5	1075	115	7.7	REV	1/2"	5.5"
3588	1/2	1075	208-230	4.2	REV	1/2"	5.5"
3996	1/2	1625	115	8.4	REV	1/2"	5.5"
3997	1/2	1625	208-230	3.8	REV	1/2"	5.5"
D728	3/4 - 1/2 - 1/3	1075	115	10.5	REV	1/2"	5.5"
D729	3/4 - 1/2 - 1/3	1075	208-230	5.4	REV	1/2"	5.5"
3999	3/4	1625	230	5.3	REV	1/2"	5.5"
3595	1 - 1/2 - 1/3	1075	115	11.8	REV	1/2"	5.5"
3596	1 - 1/2 - 1/3	1075	208-230	5.6	REV	1/2"	5.5"

Please contact your local branch for more information and pricing

5.5" DIAMETER MOTORS

Double Shaft Motors

Features:

- PSC
- Multiple Mounting Capacity
- 3 Speed
- Sleeve Bearing
- Auto overload
- Mounting holes in shell for capacitor bracket



Part #	HP	RPM	Volts	Amps	Rot.	Shaft Dia.	Motor Dia
3641	1/8	1075	115	2.3	DS	1/2"	5.5"
3642	1/8	1075	208-230	0.9	DS	1/2"	5.5"
611A	1/4	1625	115	2.8	DS	1/2"	5.5"
3862	1/5	1625	208-230	1.1	DS	1/2"	5.5"
3651	1/6	1075	115	2.7	DS	1/2"	5.5"
RA1016	1/6	1075	208-230	0.96	DS	1/2"	5.5"
3871	1/4	1625	115	3.8	DS	1/2"	5.5"
RA1024	1/4	1625	208-230	1.9	DS	1/2"	5.5"
RAL1026A	1/4	1075	115	3.9	DS	1/2"	5.5"
RA1026	1/4	1075	208-230	5.0	DS	1/2"	5.5"
RAL1034	1/3	1625	115	4.0	DS	1/2"	5.5"
3882	1/3	1625	208-230	2.4	DS	1/2"	5.5"
RA1036	1/3	1075	115	5.0	DS	1/2"	5.5"
RAL1036	1/3	1075	208-230	1.9	DS	1/2"	5.5"
3891	1/2	1625	115	9.4	DS	1/2"	5.5"
RA1054	1/2	1625	208-230	3.2	DS	1/2"	5.5"
RA1056	1/2	1075	115	5.2	DS	1/2"	5.5"
NA1056	1/2	1075	208-230	2.7	DS	1/2"	5.5"
3898	3/4	1625	208-230	5.3	DS	1/2"	5.5"
RA1076	3/4	1075	208-230	3.6	DS	1/2"	5.5"

Please contact your local branch for more information and pricing

5.6" DIAMETER MOTORS

Condenser Fan Motors

Shaft Up or Horizontal

- 208-230 VAC
- Electrically reversible
- Thermally protected
- CSA certified
- All angle mount bearings

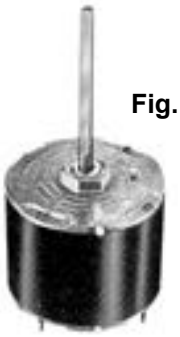

Fig. 1



Fig. 2

PSC • OPEN VENTILATION • AIR-OVER									LIST
Part #	H.P.	Volts	Amps	RPM	Load Factor	Fig.	"A" Dim.	Shaft Dim.	
3328	1/4	208-230	2.1	1075	1.3	2	4	1/2 x 6	$360.00
F1026S*	1/4	208-230	1.5	1075	1.3	2	4	1/2 x 6	$541.00
D748	1/3	208-230	2.9	1075	1.2	1	4	1/2 x 6-1/2	$376.00
F1056S	1/2	208-230	2.5	1075	1.2	2	5	1/2 x 6-1/2	$566.00
3330-RBM	1/2	208-230	4.1	1075	1.2	2	5	1/2 x 6-1/2	
D929*	3/4	208-230	5.0	1075	1.0	2	5-1/4	1/2 x 6-1/4	$538.00

• ball bearing motor * 10M 370V capacitor

Totally Enclosed Motors

- Ideal for any angle mounting
- Electrically reversible
- CSA certified
- All angle mount bearings

PSC • OPEN VENTILATION • AIR-OVER										LIST
Part #	H.P.	Volts	Amps	RPM	Load Factor	Rot.	Fig.	A" Dim.	Shaft Dim.	
D919^	1/8	208-230	.9	1075	1.3	Rev.	1	3-3/4	1/2 x 6-1/2	
D917^	1/6	208-230	1.0	1075	1.2	Rev.	1	3-3/4	1/2 x 6-1/2	$286.50
D906^	1/5	208-230	1.5	1075	1.2	Rev.	1	4	1/2 x 6-1/2	
D909	1/4	208-230	1.8	1075	1.2	Rev.	1	4	1/2 x 6-1/2	$377.00
FE1036SF	1/3	208-230	2.7	1075	1.6	Rev.	1	4-3/4	1/2 x 6-1/2	
D908^+	1/3	208-230	2.4	1075	1.2	Rev.	1	4-1/2	1/2 x 6-1/2	
3730*	1/2	208-230	3.7	1075	1.2	Rev.	1	4-3/4	1/2 x 6-1/2	
CF-3735	3/4	208-230	5	1075	1.3	Rev.	1	5-3/4	1/2 x 6-1/2	$361.00
FE1076SF	3/4	230	4.5	1075	1.2	Rev.	1	5-1/4	1/2 x 6-1/2	

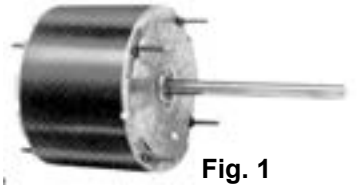

Fig. 1

+ 7.5M 370V capacitor *10M 370V capacitor • ball bearing motor @ 15M 370V capacitor † motor has increased stack for higher ambient temperatures.
^ has 4 drilled and tapped holes in shell

PSC • OPEN VENTILATION • AIR-OVER										LIST
Part #	H.P.	Volts	Amps	RPM	Load Factor	Rot.	Fig.	"A" Dim.	Shaft Dim.	
FS31016-RBM	1/6-1/8	208-230	1.2-.9	1075	1.2	Rev.	2	3-3/4	1/2 x 6-1/2	$656.00
FE1026	1/4-1/5	208-230	1.3	1075	1.4	Rev.	2	4-1/4	1/2 x 6-1/2	-
3229	1/3-1/4	208-230	2.7-1.3	1075	1.3	Rev.	2	4-3/4	1/2 x 6-1/2	$668.00
F1026S	1/4-1/8	208-230	1.5-1.9	1075	1.3	Rev.	2	4	1/2 x 6	$541.00
X415•+	1/3-1/4	208-230	2.2-1.3	1075	1.1	Rev.	2	5	1/2 x 5-1/2	$524.00
3430	1/2-1/3	208-230	3.7-1.9	1075	1.1	Rev.	2	5	1/2 x 5-1/2	-

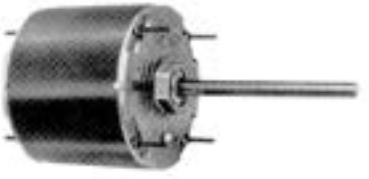

Fig.2

• ball bearing motor + 7.5M 370V capacitor

CONDENSER FAN MOTORS

Condenser Fan Motors





Features:

- Ball Bearing
- Open air over
- Belly band/ resilient ring mounting
- Three phase
- 56 frame
- Voltage change device (VCD as noted)

Part #	HP	RPM	Volts	^ Amps	Rot.	Shaft Dia.	Motor Dia.	Notes
T2532*	1/2	1140	208-230/460	2.4	REV.	5/8"	6.5"	VCD
AICH977	1/2	1140	575	1.0	REV.	5/8"	6.5"	
K1505	3/4	1140	575	1.5	REV.	5/8"	6.5"	
T2538*	1	1140	208-230/460	4.0	REV.	5/8"	6.5"	VCD
T2540*	1	1140	575	1.7	REV.	5/8"	6.5"	
T2537*	1	850	208-230/460	5.3	REV.	5/8"	6.5"	VCD
T2539*	1	850	575	2.1	REV.	5/8"	6.5"	
T2542*	1.5	1140	208-230/460	5.5	REV.	5/8"	6.5"	VCD
T2543*	1.5	1140	575	2.2	REV.	5/8"	6.5"	
T2544*	2	1140	208-230/460	7.2	REV.	5/8"	6.5"	VCD
T2536*	2	1140	575	2.7	REV.	5/8"	6.5"	
CAN2575	2	1140	575	1.4	REV.	5/8"	6.5"	1

* Alltemp Motors ^ 208 V Amp Shown 1) Rigid Base

Please contact your local branch for more information and pricing

BELTED FAN AND BLOWER MOTORS

- Reversible rotation by easy reconnection
- Threaded conduit hole
- Class "A" insulation
- Automatic reset thermal protector



Part #	HP	Volt	RPM	NEMA Frame	Bearings	Overload Protector	S.F.	F.L. Amps	Shaft Dim.	LIST
Single Speed										
HG701	1/4	115	1725	48	Sleeve	Auto	1.35	4.8	1/2 x 1-1/2	
HG711	1/3	115	1725	48	Sleeve	Auto	1.35	5.3	1/2 x 1-1/2	
HG703	1/2	115	1725	48	Sleeve	Auto	1.25	8.7	1/2 x 1-1/2	
Two Speed										
HG704	1/4	115	1725/1140	48	Sleeve	Auto	1.0	5.1/2.5	1/2 x 1-1/2	
HG706	1/3	115	1725/1140	48	Sleeve	Auto	1.0	6.9/4.0	1/2 x 1-1/2	
HG715	1/2	115	1725/1140	56	Sleeve	Auto	1.0	8.7/5.1	1/2 x 1-1/2	
C474	3/4	115	1725/1140	56	Sleeve	Auto	1.0	11.5/6.4	5/8 x 1-13/16	

- Split phase
- Dripproof
- Ball bearing
- Resilient base
- Auto overload
- Service Factor



Part #	Alt #	HP	RPM	Volts	Amps	Rot.	Shaft Dia.	Motor Dia.	Notes
B303	2888	1/4	1725	115	2.9	REV	1/2"	5.5"	48YZ
B305	2888	1/3	1725	115	4.0	REV	5/8"	5.5"	48YZ
B307	2888	1/2	1725	115	5.2	REV	5/8"	5.5"	48YZ

- Split phase
- Dripproof
- Ball bearing
- Rigid base
- Auto overload
- Service Factor

Part #	Alt #	HP	RPM	Volts	Amps	Rot.	Shaft Dia.	Motor Dia.	Notes
C159	L1301	1/3	1800	115/208-230	-	REV	5/8	-	56
C658ES	-	3/4	1725	115/208-230	-	REV	5/8	-	56

Please contact your local branch for more information and pricing

BELTED FAN AND BLOWER MOTORS

Belted Fan Motors

- Capacitor Start
- Dripproof
- Ball bearing
- Resilient base
- Auto overload
- Service Factor



Single Phase / Start Capacitor

Part #	HP	RPM	Volts	^Amps	Rot.	Shaft Dia.	Motor Dia	Notes
B313	0.25	1725	115/208-230	2.8	REV	1/2"	5.5"	48YZ
B315	0.3333	1725	115/208-230	3.1	REV	1/2"	5.5"	48YZ
B317	0.5	1725	115/208-230	4.1	REV	5/8"	6.5"	56
B319	0.75	1725	115/208-230	5.2	REV	5/8"	6.5"	56
C1158	1	1725	115/208-230	7.2	REV	5/8"	6.5"	56
C1160	1.5	1725	115/208-230	8.4	REV	5/8"	6.5"	56H
C1162	2	1725	115/208-230	10.9	REV	5/8"	6.5"	56H

^ 208 V Amp Shown 1) Rigid Base

Three Phase

Part #	HP	RPM	Volts	^Amps	Rot.	Shaft Dia.	Motor Frame	Notes
G140	0.5	1725	208-230/460	2.3	REV	5/8"	56	1
G141	0.75	1725	208-230/460	2.9	REV	5/8"	56	1
G100	1	1725	208-230/460	3.4	REV	5/8"	56H	1
K063	1	1725	208-230/460	3.5	REV	7/8"	56HZ	2
G143	1.5	1725	208-230/460	4.8	REV	5/8"	56	1
G144	2	1725	208-230/460	6.2	REV	5/8"	56H	1
121005	2	1725	208-230/460	6.2	REV	7/8"	145T	2
121946	2	1725	575	2.5	REV	7/8"	56HZ	2
G145	3	1725	208-230/460	8.6	REV	7/8"	56HZ	1
182TTDBD6026	3	1800	208-230/460	4.8	REV	1-1/8"	182T	2
F31853	3	1725	575	3.3	REV	7/8"	56HZ	2
131520	5	1725	208-230/460		REV	7/8"		
F535256	5	3450	575	4.9	REV	7/8"	56HZ	1

^ 208 V Amp Shown 1) Risilient Bas 2) Rigid Base

Please contact your local branch for more information and pricing

TECHTOP MOTORS



Part No	Description	HP	Voltage	Phase	RPM	Frame	Enclo-sure	List
DPA0004D-TTC	1hp 230/460 3ph 1800 143T Rigid ODP-TTC	1	230/460	3	1800	143T	ODP	$690.00
DPA0014D-TTC	1.5hp 230/460 3ph 1800 145T Rigid ODP-TTC	1.5	230/460	3	1800	145T	ODP	$803.00
DPA0024D-TTC	2hp 230/460 3ph 1800 145T Rigid ODP-TTC	2	230/460	3	1800	145T	ODP	$848.00
DPA0034D-TTC	3hp 230/460 3ph 1800 182T Rigid ODP-TTC	3	230/460	3	1800	182T	ODP	$1,138.00
DPA0054D-TTC	5hp 230/460 3ph 1800 184T Rigid ODP-TTC	5	230/460	3	1800	184T	ODP	$1,281.00
DPA0074D-TTC	7.5hp 230/460 3ph 1800 213T Rigid ODP-TTC	7.5	230/460	3	1800	213T	ODP	$1,802.00

Part No.	Description	HP	Voltage	Phase	RPM	Frame	Enclo-sure	List
DPA0004F-TTC	1hp 575 3ph 1800 143T Rigid ODP-TTC	1	575	3	1800	143T	ODP	$690.00
DPA0014F-TTC	1.5hp 575 3ph 1800 145T Rigid ODP-TTC	1.5	575	3	1800	145T	ODP	$803.00
DPA0024F-TTC	2hp 575 3ph 1800 145T Rigid ODP-TTC	2	575	3	1800	145T	ODP	$848.00
DPA0034F-TTC	3hp 575 3ph 1800 182T Rigid ODP-TTC	3	575	3	1800	182T	ODP	$1,138.00
DPA0054F-TTC	5hp 575 3ph 1800 184T Rigid ODP-TTC	5	575	3	1800	184T	ODP	$1,281.00
DPA0074F-TTC	7.5hp 575 3ph 1800 213T Rigid ODP-TTC	7.5	575	3	1800	213T	ODP	$1,802.00

TECHTOP MOTORS

Part No.	Description	HP	Voltage	Phase	RPM	Frame	Enclo-sure	List
BLA0004DP-C-TTC	1hp 230/460 3ph 1800 56C Rig/CFla TEFC-TTC	1	230/460	3	1800	56C	TEFC	$833.00
GRA0004D-01-TTC	1hp 230/460 3ph 1800 143T Rigid TEFC-TTC	1	230/460	3	1800	143T	TEFC	$859.00
GRA0014D-01-TTC	1.5hp 230/460 3ph 1800 145T Rigid TEFC-TTC	1.5	230/460	3	1800	145T	TEFC	$934.00
GRA0024D-01-TTC	2hp 230/460 3ph 1800 145T Rigid TEFC-TTC	2	230/460	3	1800	145T	TEFC	$1,000.00
GRA0034D-01-TTC	3hp 230/460 3ph 1800 182T Rigid TEFC-TTC	3	230/460	3	1800	182T	TEFC	$1,301.00
GRA0054D-01-TTC	5hp 230/460 3ph 1800 184T Rigid TEFC-TTC	5	230/460	3	1800	184T	TEFC	$1,468.00
GRA0074D-01-TTC	7.5hp 230/460 3ph 1800 213T Rigid TEFC-TTC	7.5	230/460	3	1800	213T	TEFC	$2,070.00

Part No.	Description	HP	Voltage	Phase	RPM	Frame	Enclo-sure	List
BLA0004FP-C-TTC	1hp 575 3ph 1800 56C Rigid/CFla TEFC-TTC	1	575	3	1800	56C	TEFC	$833.00
GRA0004F-01-TTC	1hp 575 3ph 1800 143T Rigid TEFC-TTC	1	575	3	1800	143T	TEFC	$859.00
GRA0014F-01-TTC	1.5hp 575 3ph 1800 145T Rigid TEFC-TTC	1.5	575	3	1800	145T	TEFC	$934.00
GRA0024F-01-TTC	2hp 575 3ph 1800 145T Rigid TEFC-TTC	2	575	3	1800	145T	TEFC	$1,000.00
GRA0034F-01-TTC	3hp 575 3ph 1800 182T Rigid TEFC-TTC	3	575	3	1800	182T	TEFC	$1,301.00
GRA0054F-01-TTC	5hp 575 3ph 1800 184T Rigid TEFC-TTC	5	575	3	1800	184T	TEFC	$1,468.00
GRA0074F-01-TTC	7.5hp 575 3ph 1800 213T Rigid TEFC-TTC	7.5	575	3	1800	213T	TEFC	$2,070.00

Part No.	Description	HP	Voltage	Phase	RPM	Frame	Enclo-sure	List
GPS.254C-01-TTC	1/4hp 115/230 1ph 1800 56 TEFC Rig B-TTC	0.25	115/208-230	1	1800	56C	TEFC	$518.00
GPS.334C-01-TTC	1/3hp 115/230 1ph 1800 56 TEFC Rig Bs-TTC	0.33	115/208-230	1	1800	56	TEFC	$553.00
GPS.754C-01-TTC	3/4hp 115/230 1ph 1800 56 TEFC Rig Bs-TTC	0.75	115/208-230	1	1800	56	TEFC	$667.00
GPS0004C-01-TTC	1hp 115/230 1ph 1800 56H TEFC Rig Bs-TTC	1	115/208-230	1	1800	56H	TEFC	$820.00

ACCESSORIES

Band Mounting Kits

Lug Kits





KIT150



KIT49

Part #	Motor Dia.	Lug Size	Bolt Circle Range	LIST
55L	5.5"	Large	8-1/8-12-1/8	$75.50
55S	5.5"	Small	6-7/8-8-1/8	$67.70
KIT34	3.3"	Large	4-11/16-9-7/8	$79.00
KIT50	5.0"	Large	6-7/16-11-11/16	$75.50
KIT49	3 small lugs for kit 55S			$32.70
KIT150	4 grommets to fit lugs on kits 49, 50,34, 55L, 55S			$30.40



Part #	Motor Dia.	Lug Size	Bolt Circle Range	LIST
NO50L	4.4" & 5.0"	Large	6-1/2-11-8/16	$84.60
NO33L	3.3"	Large	4-1/2-10	$84.60



Part #	Description	LIST
KIT315	Fits 5.0" diameter motors	$79.00
KIT317	Fits 5.6" diameter motors	

Mount Bracket Kits

For direct drive blower motors using the flexible bracket mounting.



Part #	Description	LIST
FM50	Fits 5.0" dia. motors	
TFM55	Fits 5.5" dia. motors	

Condenser Fan Rainshields

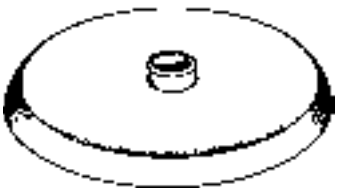

Part #	Shaft Dia.	Slinger O.D.	LIST
KIT170	1/2"	7"	$22.10
RAIN6017	5/8"	7"	-

ACCESSORIES

Motor Speed Controls

Solid State Variable Spee AC Motor Controls

- Built-in On/Off Line Switch
- RFI Filter
- Min. Speed Trimmer



Part #	Max. Current Rating (RMS amps)	On/Off Line Switch Rating (Amps @ 125 VAC)	LIST
KBWC-13K	2.5	3.0	$69.60
KBWC-15K	5.0	6.0	$73.50
KBWC-16K	6.0	6.0	$77.00
KBWC-110K	10.0	15.0	$154.50
KBWC-115K	15.0	15.0	$184.90

Shaft Adaptors

Steel Bushings



Part #	Description	LIST
BUSH3273-ALL	5/16" OD x 1/4" ID Bushing	$13.70
S-8202	3/8" OD x 1/4" ID Bushing	$13.30
BUSH3314-ALL	3/8" OD x 5/16" ID Bushing	
S-8204	7/16" OD x 3/8" ID Bushing	$13.20
S-8205	1/2" OD x 1/4" ID Bushing	$1.90
S-8206	1/2" OD x 5/16" ID Bushing	$21.10
BUSH3274-ALL	1/2" OD x 3/8" ID Bushing	
S-8217	3/4" OD x 5/8" ID Adapter w/key	$92.30
S-8215	5/8" OD x 1/2" ID Adapter w/key	$48.20

Vibration Insulators



S7801



S7802



S7804



S7805



028-10505-000

Part #	Max. load in pounds (Compression)	LIST
S-7801	60	$111.80
S-7802	100	$27.90
S-7804	40	$26.00
S-7805	50	$24.70

AIR MOVING PRODUCTS

SOLER & PALAU

Quick Reference Guide

In-line Fans


PV


TD MIXVENT


TD-SILENT


FF


SQB/SQD

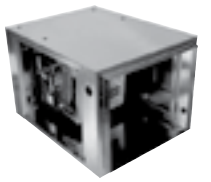
CFD/CVTT

Wall

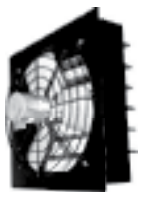
S


LC


L2/L3


GED/GSD


CWD

Tube Axial


TDB


DDT

Vent Sets


CM


PW

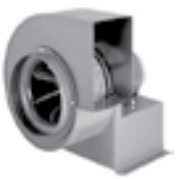
KE


B/FCB

Centrifugal Blowers

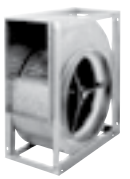
CBS

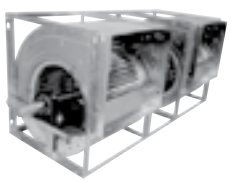
CBP-DC/DE


CBP-RC/RE

Spun Aluminum Roof Top


ARE/ARS


TXD


TXB


DB


eRED/RED


LPD

Roof Top


HRSB


TUB

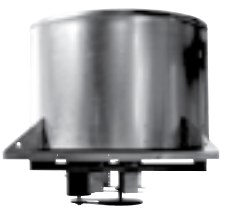
UBB/UBS/UBX


CSF


KSF


TH

AIR MOVING PRODUCTS

SOLER & PALAU

Competitors Cross Reference Models

Models are for general similarity only. Refer to specifications and construction data for details

S&P	Description	Coolair	Cook	Twin City	Penn	Acme	Carnes	Green-heck	Fantech	Canarm/ Delhi
DB	R/T Down Blast Exhaust Centrif. BD	CRBCA	ACEB	BCDR	DXB/KB/ JB/MB	PV/PNN	VEBK	GB	BDD/ABE	BDCR/ CBR
LPD & RED	R/T Down Blast Exhaust Centrif. DD	CRDA	ACED	DCRD	DX	PRN	VEDK	G	REC/ DDD	DR-H/300/ CDR
TXB	R/T Up Blast Exhaust Centrif. BD	UBCA	ACRUB	BCRU	FXB/FMX	PNU/PU	VUBK	CUBE	BDU	CDU / CBU
TXB UL762	R/T Up Blast Exhaust Centrif. BD	CUBA	VCR	BCRUR	FXBFT/ FMBFT	PNU-RG	VRBK	CUBE	BDU	BDU/ CBUHP
TXD	R/T Up Blast Exhaust Centrif. DD	UDCA	ACRUD	DCRU/ R	FX/FMX	PDU	VUDK	CUE	DDU	DU-H / CDU
CWD	Sidewall Exhaust Centrif. DD	CWDA	ACWD	TCWX	WX/WA/ WB	PW	VWDK	GW	--	--
FF/FFC	Ceiling Cabinet fans DD	CF/CFL	GC-GN	T/TL	ZEPHER-Z	V/VQ/VQL	VCDD	SP/CSP	CEV/ IEV	--
KSF	R/T Filtered fresh air supply fan DD	CFS/SIS	KSPB	BCFS	MU/FS	AFSI	VSBB	KSU/RSF	FSU	SIS / SBAR
ARE / ARS	R/T Dome Exhaust/Supply Axial. DD	SASD/ SAED	AQD	--	DAE	LQ	LEDA	AIS	ADE /ADS	--
S	Direct drive shutter fan DD	CDP/WS	--	--	P	--	--	--	SHE	SD/ AX/ S
GED / GSD	Sidewall Exhaust/Supply Prop. DD	CDC	APD	TCPE	P	FQ/FN	LTDK/ LZDK	SE1/SS1	VLD	P
LCE / LCS	Sidewall Exhaust/Supply Prop. BD	CAB/CBL	XLM/SWB	WPMD	BLL/BFM/ BBK	DC/DCK	LWBA/ LWBK	SBE/S 1&2	SDE	DDS / ADD
L2E / L2S	HD Sidewall Exhaust/Supply Prop. BD	CAL	XL/XM/ AWB/ HWB	TCWPX *	BFM/BFH/ BCH	DCK/DCH	LABA	SBE/SBC	MDE	XB / HV
SQB	Square Inline Duct Fan Centrif. BD	SQBA	SQNB -B/ SQI-B	BSI	SXB	XB	VIBK	BSQ	--	DSQ-B
SQD	Square Inline Duct Fan Centrif. DD	SQDA	SQND -D/ SQI-D	DSI	SX	XD	VIDK	SQ	FSD	DSQ-D
UBS	R/T Upblast Exhaust Propeller DB	J/JT	LXU/LEU/ LSU	LPRVX	HS/HZ	UBG	LUBA	PUB/RBU	BLT	RB
HREB-C	R/T Hooded Exhaust Propeller BD	PEB	HXE/HEE	LPHD/B	AF/AC	EC/ECH	LTBA	RBE/ RBCE	RHE	PRE
UBSRD-HT	R/T Upblast Exh. H. Temp Prop. BD	HS	SUBH	UBT/TUB	HX	UBH-UF	LQBA	TAUB-HT	--	RTA
HRSB	R/T Hooded Supply Propeller BD	PSB	HXS/HES	HVWP	AF/AC	EC-S/ ECH-S	LGBA	RBS/ RBCS	RHS	PRI
TDB / DDT	Tube Axial fans BD/DD	TBC/ TEBC	EDB/EDD	TB/TD	BTA/TA	HA / HDD	LIBA/LIDA	TAB/ TAD		BTA/DDA
CM	Vent Sets/ BI / cUL705 & 762 & 793 BD	VSBC	CPV/S	BCV/J	D/RPK	QBR	--	SWB	--	BI/BI-RM
RCXII	Non-powered Roof Vent - Rnd Dome	ARVE	PR	GRV	DR	LQV	GSAA	GRS	--	--
CSF	R/T Centrifugal Filtered Supply BD	CFS	ASP	FSR	MU	--	VHBB/ VSBB	RSF	--	700
CVTT	Forward curve air handler 7' to 30" BD	--	--	DBS	--	--	VGBA		--	9200
CFD	Forward curve air handler 7' to 15" DD/BD	--	DB	DBS	ZC	--	VDBA		--	200
CBS	Single inlet blower BD	--	--	DBS	--	--	--		--	400
CBM	Direct drive dual inlet blower DD	--	--	--	--	--	--		BLR	GDD
CBP	Belt drive dual inlet blower BD	--	--	TFC	--	--	--		--	G
CBP-RC	Belt drive dual inlet Framed blower BD	--	--	VFC	--	--	--		--	800
CBP-RE	Belt drive dual inlet framed HD blower	--	--	TFC-2	--	--	--		--	900
FCB	Belt drive Forward curve vent set	--	--	FCV	--	--	VFB	SFB	--	600
TD	2 speed inline mixed flow fan DD	--	--	--	--	--	--	--	--	-
PV	Backward inclined inline fan DD	--	--	--	--	--	--	--	FG	-
SWF	Outside wall mount exhaust DD	--	--	--	--	--	--		RVF	-
PW	Radial blade pressure blower DD	--	--	--	--	--	--	FPB	--	PW
KE	Radial blade pressure blower DD	--	CPFD	JRW	--	--	--	IPA	--	KE
D	Forward curve direct drive blower DD	--	--	DDF	--	--	--	SFD		D

R/T = Roof Top, BD = Belt Drive , DD = Direct Drive

BLOWER WHEELS

LAU

Lau Universal PRESLOK wheels fit most blowers, regardless of manufacturer.

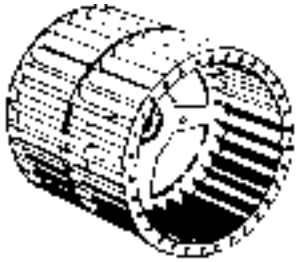

Basics of wheel replacement (for residential air conditioning or heating equipment):

- Determine if belt driven or direct driven blower
- Measure diameter and width - over the rim
- Determine bore size - measure hub in wheel or shaft diameter
- For direct drive or double inlet wheels

Note: Determine rotation by viewing from hub side

Wheels for Direct Driven Blowers

Part Number	Description	Bore	Overall		LIST
			Dia.	Width	
013334-01	DD9-4 CW	1/2	9-15/16"	4-1/2"	-
013335-01	DD9-6 CW	1/2	9-15/16"	6"	-
013336-02	DD9-7 CW	1/2	9-15/16"	7-1/8"	$262.10
013336-03	DD9-7 CCW	1/2	9-15/16"	7-1/8"	$262.10
013337-01	DD9-8 CW	1/2	9-15/16"	8"	$280.50
013337-03	DD9-8 CCW	1/2	9-15/16"	8"	$282.20
013332-01	DD9-9 CW	1/2	9-15/16"	9-1/2"	$266.10
013332-03	DD9-9 CCW	1/2	9-15/16"	9-1/2"	$288.80
013327-01	DD10-4 CW	1/2	11-1/8"	4-1/2"	$285.60
013326-01	DD10-6 CW	1/2	11-1/8"	6"	$328.00
013326-02	DD10-6 CCW	1/2	11-1/8"	6"	$321.00
013326-14	DD10-6 CW	5/8	11-1/8"	6"	-
013325-01	DD10-7 CW	1/2	11-1/8"	7-1/8"	
027102-04	DD10-7 CCW	1/2	11-1/8"	7-1/8"	-
013324-01	DD10-8 CW	1/2	11-1/8"	8"	-
013324-02	DD10-8 CCW	1/2	11-1/8"	8"	-
013317-01	DD10-9 CW	1/2	11-1/8"	9-1/2"	-
013323-01	DD10-9 CW	1/2	11-1/8"	9-1/2"	-
013316-02	DD10-10 CW	1/2	11-1/8"	10-5/8"	$312.00
013322-03	DD10-10 CW	1/2	11-1/8"	10-5/8"	-
013316-06	DD10-10 CCW	1/2	11-1/8"	10-5/8"	$328.00
026940-03	DD11-6 CW	1/2	12-1/4"	6"	-
026940-05	DD11-7 CW	1/2	12-1/4"	7-1/8"	-
026940-07	DD11-8 CW	1/2	12-1/4"	8"	-
026941-07	DD11-8 CW	1/2	12-1/4"	8"	-
026940-08	DD11-8 CCW	1/2	12-1/4"	8"	-
026940-09	DD11-9 CW	1/2	12-1/4"	9-1/2"	$365.00
026940-10	DD11-9 CCW	1/2	12-1/4"	9-1/2"	-
026941-11	DD11-10 CW	1/2	12-1/4"	10-5/8"	$345.00
026941-12	DD11-10 CCW	1/2	12-14"	10-5/8"	$405.00
013693-25	DD12-9 CW	1/2	13-3/16"	9-1/2"	-
013693-15	DD12-9 CW	5/8	13-3/16"	9-1/2"	$449.00
015565-07	DD12-12 CW	1/2	13-3/16"	12-5/8"	$417.00
015565-04	DD12-12 CW	5/8	13-3/16"	12-5/8"	

Wheels for Belt Driven Blowers

Part Number	Description	Bore	Overall		LIST
			Dia.	Width	
008666-12	A9-6A	3/4	9-15/16	6	-
008621-12	A9-7A	3/4	9-15/16	7-1/8	$274.90
008519-12	A9-9A	3/4	9-15/16	9-1/2	$274.90
008519-16	A9-9A	1	9-15/16	9-1/2	$282.20
012237-12	A10-4A	3/4	11-1/8	4-1/2	-
008364-12	A10-6A	3/4	11-1/8	6	-
008363-12	A10-7A	3/4	11-1/8	7-1/8	$300.00
008361-12	A10-8A	3/4	11-1/8	8	$302.00
008362-12	A10-9A	3/4	11-1/8	9-1/2	$300.00
008360-12	A10-10A	3/4	11-1/8	10-5/8	-
008360-10	A10-10A	5/8	11-1/8	10-5/8	-
008360-16	A10-10A	1	11-1/8	10-5/8	$352.00
008971-16	A12-6A	1	13-3/16	6	-
008507-16	A12-9A	1	13-3/16	9-1/2	$433.00
008507-58	A12-9A	1-3/16	13-3/16	9-1/2	-
008507-23	A12-9A	1-7/16	13-3/16	9-1/2	-
009867-16	A12-11A	1	13-3/16	11-1/8	-
008403-10	A12-12A	5/8	13-3/16	12-5/8	-
008403-16	A12-12A	1	13-3/16	12-5/8	$418.00
008403-93	A12-12A	1-3/16	13-3/16	12-5/8	-
008403-79	A12-12A	1-7/16	13-3/16	12-5/8	$576.00
008747-16	A12-15A	1	13-3/16	15	$535.00
009548-16	A15-9A	1	15-1/2	9-1/2	$606.00
009548-70	A15-9A	1-3/16	15-1/2	9-1/2	-
009548-23	A15-9A	1-7/16	15-1/2	9-1/2	-
008418-16	A15-11A	1	15-1/2	11-1/8	$617.00
008418-77	A15-11A	1-3/16	15-1/2	11-1/8	-
008418-80	A15-11A	1-7/16	15-1/2	11-1/8	-
008746-16	A15-12A	1	15-1/2	12-5/8	$677.00
008276-16	A15-15A	1	15-1/2	15	$583.00
017671-37	A15-15A	1-3/16	15-1/2	15	$750.00
008276-72	A15-15A	1-7/16	15-1/2	15	$605.00
008659-16	A18-13A	1	18-5/8	13-1/2	$1,160.00
008659-60	A18-13A	1-7/16	18-5/8	13-1/2	-
008658-16	A18-18A	1	18-5/8	18	$1,075.00
008658-74	A18-18A	1-3/16	18-5/8	18	$1,492.00
008658-87	A18-18A	1-7/16	18-5/8	18	$1,477.00

BLOWER WHEELS

FASCO

Single Outlet



Rotation determined by viewing back plate

Typical Applications

- Condensers
- Small appliances
- Furnaces
- Draft booster
- Flue exhaust

Part Number	Diameter	Width	Rot'n	Bore	Max RPM	LIST
1-6038	3	1-7/8	CW	1/4	5000	$63.80
1-6039	3	1-7/8	CCW	1/4	5000	$72.30
1-6040	3-13/16	1-7/8	CCW	1/4	5000	$68.10
1-6041	3-13-16	1-7/8	CW	1/4	5000	$70.90
1-6042	3-13/16	1-7/8	CCW	5/16	5000	$68.10
1-6043	3-13/16	1-7/8	CW	5/16	5000	$68.10
1-6044	3-13/16	2-1/2	CW	5/16	5000	$68.10
1-6045	3-13/16	2-1/2	CCW	5/16	5000	$76.60
1-6113	3-27/32	1	CW	1/4	5800	$69.50
1-6051	3-27/32	1-13/64	CCW	1/4	5640	$82.30
1-6141	4	1-1/2	CCW	5/16	3600	$88.00
1-6133	4	2-1/2	CCW	1/4	3600	$75.50
1-6046	4-1/4	2	CCW	1/4	4500	$76.60
1-6047	4-1/4	2	CCW	5/16	4500	$82.30
1-6052	4-1/4	2-15/16	CCW	1/4	4500	-
1-6160	4-17/32	1-1/4	CW	5/16	6300	$184.30
1-6161	4-17/32	1-1/4	CCW	5/16	6300	$207.10
1-6048	4-23/32	2-15/16	CW	5/16	3600	$73.80
1-6000	4-23/32	2-15/16	CCW	5/16	3600	$72.30
1-6024	5-13/64	2-1/2	CW	5/16	3600	$88.00
1-6053	5-13/64	2-29/32	CW	5/16	3600	$85.10
1-6054	5-13/64	2-29/32	CCW	5/16	3600	$86.20
1-6143	5-3/4	1-1/2	CCW	5/16	3600	$177.40
1-6026	5-45/64	2-15/16	CCW	5/16	3000	-
1-6002	5-45/64	4	CW	1/2	2800	-
1-6057	5-45/64	4	CCW	1/2	2800	$93.60
1-6058	6	3-1/4	CW	1/2	2400	$105.00
1-6060	6-3/16	2-15/16	CCW	3/8	3000	$100.70
1-6064	6-25/64	4	CCW	1/2	1700	$119.20
1-6066	7-1/8	2	CCW	5/16	2900	$131.90
1-6005	7-1/8	4	CCW	1/2	1500	$133.40
1-6070	7-31/32	3-1/2	CW	1/2	1800	$147.60
1-6006	8-5/64	4	CW	1/2	1650	$161.70
1-6074	8-5/64	4	CCW	1/2	1650	$158.90
1-6077	8-35/64	3	CCW	1/2	2050	$168.80
1-6007	9-1/8	4-1/4	CW	1/2	1475	$188.70
1-6079	9-31/32	4	CW	1/2	1350	$195.80
1-6080	9-31/32	4	CCW	1/2	1350	$208.60
1-6027	9-31/32	6	CW	1/2	1100	

Double Outlet

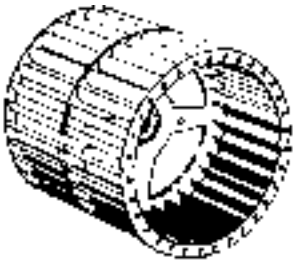

Rotation determined by viewing hub extension

Typical Applications

- Condensers
- Small appliances
- Furnaces

Part Number	Diameter	Width	Rot'n	Bore	Max RPM	LIST
2-6011	4-27/32	7	CW	1/2	3600	$133.40
2-6029	4-9/32	7	CCW	1/2	3600	$133.40
2-6082	5-13/32	6-55/64	CCW	3/8	3600	$140.50
2-6030	5-13/64	6-7/8	CW	1/2	3600	$134.80
2-6012	5-19/64	7	CCW	1/2	3600	$134.80
2-6013	5-9/16	6-1/2	CW	1/2	2500	-
2-6014	5-9/16	6-1/2	CCW	1/2	2500	$137.60
2-6032	5-45/64	7-5/8	CCW	1/2	3000	$144.70
2-6033	5-3/4	7-5/8	CW	1/2	1700	$140.50
2-6083	6-25/64	7	CW	1/2	2050	$157.50
2-6015	6-25/64	7	CCW	1/2	2050	$157.50
2-6084	6-3/16	7-5/8	CW	1/2	3000	$157.50
2-6085	6-3/16	7-5/8	CCW	1/2	3000	$171.70
2-6034	6-25/64	8	CW	1/2	1500	$177.40
2-6086	7-31/64	4	CW	3/4	2700	-
2-6087	7-31/64	4	CCW	3/4	2700	$177.40
2-6035	7-31/64	4-1/2	CW	3/4	2400	-
2-6036	7-31/64	4-1/2	CCW	3/4	2400	$177.40
2-6016	7-31/64	6	CW	3/4	1950	$184.40
2-6017	7-31/64	6	CCW	3/4	1950	$184.40
2-6018	7-31/64	9	CW	1/2	1600	$248.30
2-6089	9-1/2	6	CW	1/2	1750	$252.60
2-6019	9-1/2	7	CW	1/2	1550	$261.10
2-6090	9-1/2	8	CW	1/2	1400	$273.80
2-6020	9-1/2	9-1/4	CW	1/2	1300	$299.40
2-6093	10-25/32	7	CW	1/2	1350	$345.00
2-6021	10-25/32	7-3/4	CW	1/2	1250	$372.00
2-6037	10-25/32	9-1/4	CW	1/2	1200	$376.00
2-6022	10-25/32	10-1/2	CW	1/2	1150	$359.00

FAN BLADES

Heavy Duty Condenser Type - 4 Blade (determine rotation by facing air discharge side of prop.)

*3 & 5 bladed fans are also available. Check with you local RSL brach for pricing & details.

Part Number	Dia. (in)	Pitch	RPM	Static Pressure								LIST
				.0		.10		.20		.30		
				CFM	H.P.	CFM	H.P.	CFM	H.P.	CFM	H.P.	
HD-1019-CW-4	10	19°	1140	419	.004	243	.006	104	.01			
HD-1019-CCW-4	10	19°	1550	570	.010	432	.013	307	.015	200	.020	$105.40
			1725	634	.014	512	.017	395	.019	284	.023	
HD-1023-CW-4	10	23°	1140	508	.007	300	.009	153	.012			
HD-1023-CCW-4	10	23°	1550	690	.018	530	.021	380	.024	264	.029	$100.10
			1725	768	.025	623	.03	486	.031	367	.036	
HD-1027-CW-4	10	27°	1140	580	.011	366	.023	209	.018			
HD-1027-CCW-4	10	27°	1550	788	.027	600	.029	440	.033	350	.04	
			1725	877	.037	723	.039	587	.042	462	.049	
HD-1033-CW-4	10	33°	1140	700	.016	462	.020	287	.025			
HD-1033-CCW-4	10	33°	1550	950	.040	712	.041	540	.043	458	.049	$108.40
			1725	1060	.055	868	.057	720	.059	600	.067	
HD-1219-CW-4	12	19°	1140	830	.02	666	.026	213	.03			
HD-1219-CCW-4	12	19°	1550	1129	.05	1040	.056	870	.065	560	.078	$114.70
			1725	1257	.069	1185	.074	1052	.084	846	.096	
HD-1223-CW-4	12	23°	1140	883	.022	721	.028	283	.037			
HD-1223-CCW-4	12	23°	1550	1200	.056	1125	.062	940	.072	650	.085	$105.30
			1725	1336	.077	1263	.084	1135	.094	935	.101	
HD-1227-CW-4	12	27°	1140	934	.025	772	.032	342	.041			
HD-1227-CCW-4	12	27°	1550	1270	.064	1180	.072	1020	.083	740	.095	$114.70
			1725	1414	.088	1336	.098	1213	.108	1024	.121	
HD-1233-CW-4	12	33°	1140	1010	.029	858	.037	437	.047			
HD-1233-CCW-4	12	33°	1550	1370	.073	1272	.085	1120	.095	870	.108	
			1725	1525	.101	1440	.115	1330	.126	1150	.142	
HD-1419-CW-4	14	19°	1140	993	.02	780	.03	574	.04	320	.05	
HD-1419-CCW-4	14	19°	1550	1350	.06	1190	.07	1030	.082	880	.09	$132.00
			1750	1500	.08	1358	.10	1219	.11	1080	.12	
HD-1423-CW-4	14	23°	1140	1177	.03	960	.04	705	.05	430	.07	
HD-1423-CCW-4	14	23°	1550	1600	.085	1430	.10	1260	.11	1090	.12	$120.00
			1750	1780	.12	1630	.13	1475	.14	1324	.15	
HD-1427-CW-4	14	27°	1140	1360	.04	1122	.054	853	.06	500	.08	
HD-1427-CCW-4	14	27°	1550	1850	.11	1675	.12	1490	.14	1300	.15	$119.90
			1750	2059	.15	1903	.17	1736	.18	1570	.195	
HD-1433-CW-4	14	33°	1140	1640	.059	1380	.074	1050	.080	620	.092	
HD-1433-CCW-4	14	33°	1550	2230	.148	2025	.157	1830	.175	1625	.198	
			1725	2515	.213	2305	.222	2120	.237	1940	.247	
HD-1619-CW-4	16	19°	1140	1515	.02	1346	.04	1173	.06	1000	.08	
HD-1619-CCW-4	16	19°	1550	2060	.05	1935	.09	1810	.11	1680	.14	$144.40
			1725	2293	.07	2180	.11	2070	.14	1975	.17	
HD-1623-CW-4	16	23°	1140	1750	.05	1610	.07	1346	.10	1070	.12	
HD-1623-CCW-4	16	23°	1550	2380	.125	2270	.15	2150	.16	2010	.20	$141.40
			1725	2650	.17	2560	.21	2460	.23	2360	.25	
HD-1627-CW-4	16	27°	1140	1986	.08	1853	.09	1574	.12	1300	.15	
HD-1627-CCW-4	16	27°	1550	2700	.20	2610	.21	2490	.235	2340	.26	$145.50
			1725	3005	.28	2916	.29	2827	.32	2716	.34	
HD-1633-CW-4	16	33°	1140	2330	.126	2200	.134	1870	.162	1570	.195	
HD-1633-CCW-4	16	33°	1550	3170	.315	3100	.320	2990	.330	2845	.350	$143.80
			1725	3525	.435	3450	.440	3365	.450	3275	.475	
HD-1827-CW-4	18	27°	850	2150	.062	1850	.080	1350	.100	1000	.115	
HD-1827-CCW-4	18	27°	1000	2540	.100	2300	.120	1950	.140	1500	.170	$180.10
			1140	2850	.140	2650	.160	2400	.190	2060	.220	
HD-1830-CW-4	18	30°	850	2300	.075	1970	.095	1450	.115	1130	.140	
HD-1830-CCW-4	18	30°	1000	2700	.120	2500	.145	2050	.177	1640	.190	$189.90
			1140	3080	.180	2900	.205	2560	.237	2150	.260	
HD-1833-CW-4	18	33°	850	2480	.095	2130	.115	1560	.135	1240	.160	
HD-1833-CCW-4	18	33°	1000	2920	.150	2650	.172	2200	.203	1770	.230	$180.10
			1140	3300	.230	3080	.250	2750	.280	2300	.320	
HD-2027-CW-4	20	27°	850	2590	.090	2180	.103	1700	.130	1300	.142	
HD-2027-CCW-4	20	27°	1000	3000	.150	2680	.162	2300	.180	1900	.200	$199.30
			1140	3420	.196	3120	.230	2800	.255	2450	.280	
HD-2030-CW-4	20	30°	850	2800	.110	2490	.128	1900	.145	1500	.170	
HD-2030-CCW-4	20	30°	1000	3300	.180	3020	.200	2650	.220	2150	.240	
			1140	3770	.260	3510	.290	3215	.310	2830	.335	
HD-2033-CW-4	20	33°	850	3120	.130	2700	.150	2040	.165	1610	.195	
HD-2033-CCW-4	20	33°	1000	3660	.210	3330	.235	2850	.260	2300	.282	$167.10
			1140	4160	.315	3900	.340	3520	.360	3020	.390	

(continued next page...)

FAN BLADES

Heavy Duty Condenser Type - 4 Blade (determine rotation by facing air discharge side of prop.)(...continued)

Part Number	Dia. (in)	Pitch	RPM	Static Pressure .0 CFM	.0 H.P.	.10 CFM	.10 H.P.	.20 CFM	.20 H.P.	.30 CFM	.30 H.P.	LIST
HD-2227-CW-4	22	27°	850	4120	.210	3780	.230	3350	.250	2750	.280	
			1000	4900	.340	4550	.360	4200	.390	3800	.410	
HD-2227-CCW-4	22	27°	1140	5550	.500	5300	.520	5000	.540	4700	.600	$216.30
HD-2233-CW-4	22	33°	850	4800	.300	4450	.320	3870	.360	3300	.380	
			1000	5600	.470	5300	.440	4950	.520	4500	.560	
HD-2233-CCW-4	22	33°	1140	6500	.720	6150	.750	5800	.790	5450	.840	$226.60
HD-2427-CW-4	24	27°	850	5100	.265	4800	.283	4300	.320	3600	.360	
			1000	6000	.440	5650	.470	5300	.495	4900	.520	
HD-2427-CCW-4	24	27°	1140	6900	.670	6600	.695	6350	.715	6000	.735	$225.30
HD-2433-CW-4	24	33°	850	6050	.360	5600	.400	5125	.420	4400	.460	
			1000	7050	.590	6750	.610	6350	.650	5850	.700	
HD-2433-CCW-4	24	33°	1140	8150	.900	7850	.930	7500	.955	7050	1.00	$250.30
HD-2624-CW-4	26	24°	850	5815	.298	5520	.326	5100	.360	4470	.396	
			1000	6840	.486	6620	.520	6300	.556	5900	.600	
HD-2624-CCW-4	26	24°	1140	7800	.720	7600	.760	7360	.800	7050	.848	$262.50
HD-2627-CW-4	26	27°	850	6550	.360	6200	.390	5730	.440	5075	.495	
			1000	7705	.586	7400	.615	7050	.675	6620	.725	
HD-2627-CCW-4	26	27°	1140	8780	.860	8530	.908	8270	.956	7900	1.010	$273.40
HD-2633-CW-4	26	33°	850	7540	.534	7120	.573	6550	.627	5800	.660	
			1000	8870	.869	8530	.925	8100	.960	7550	1.015	
HD-2633-CCW-4	26	33°	1140	10110	1.290	9820	1.352	9480	1.412	9030	1.460	$278.50
HD-3022-CW-4	30	22°	850	7653	.58							$347.00
			1000	9137	.97							
HD-3027-CW-4*	30	28°	1140	10264	1.39							$909.00

*HD-3027-CW-4 *needs a STB type hub, not a 3-hole as listed*

Features:

- High quality galvanized steel blades
- Hub welded on discharge side
- Zinc and dichromate plated steel spiders
- For use with split taper bushings except where noted (bushings sold separately)

Typical Applications:

- Commercial air conditioning and ventilation
- Air handlers
- Cooling towers
- Large unit heaters



Interchangeable Hubs

- Bore sizes to fit most field applications
- Fits all Lau propellers that use interchangeable hubs
- Simple bolt design
- Die-case zinc construction
- Hub has pre-tapped holes and mounting screws started



Part #	Bore	Set Screws	LIST
1/4-3-HOLE	1/4"	1	$29.20
5/16-3-HOLE	5/16"	1	$28.90
3/8-3-HOLE	3/8"	1	$29.20
1/2-3-HOLE	1/2"	2	$28.80
5/8-3-HOLE	5/8"	2	$34.00
3/4-3-HOLE	3/4"	2	$34.30

FAN BLADES

Hubless Fan
will fit General Electric, Redmond and Morrill motors

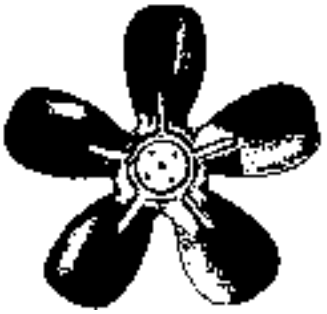

Part #	.0"SP CFM	.0625" SP CFM	.1" SP CFM	.125" SP CFM	LIST
OU631-CW OU631-CCW	120	105	90	0	$21.80
OU720-CW OU720-CCW	150	120	100	85	$13.20
OU731-CW OU731-CCW	200	165	120	100	$21.80
OU820-CW OU820-CCW	260	230	200	175	$13.80
OU831-CW OU831-CCW	325	290	250	215	$21.80
OU920-CW OU920-CCW	350	315	280	245	$29.00
OU931-CW OU931-CCW	435	380	340	290	$16.40
OU1020-CW OU1020-CCW	440	395	350	300	$17.00
OU1031-CW OU1031-CCW	680	630	590	560	$29.00

OU Fan Hubs

Part #	LIST
1/4-2-HOLE	$30.00
5/16-2-HOLE	$29.30

1/4" Bore Hub

Part #	Type	Dia.	Pitch	Rot.	Hub Location	LIST
FB172	Blower	5-1/2	27°	CW	Back	-
FB175	Sucker	5-1/2	27°	CCW	Front	-
S-7471	Blower	7	27°	CW	Back	$18.90
S-7472	Sucker	7	27°	CCW	Front	$30.10
S-7481	Blower	8	24°	CW	Back	$32.90
S-7482	Sucker	8	24°	CCW	Front	$32.90
S-7491	Blower	9	26°	CW	Back	$40.50
S-7492	Sucker	9	26°	CCW	Front	$41.50
S-7493	Blower	10	20°	CW	Back	$37.20
S-7494	Sucker	10	20°	CCW	Front	$37.20

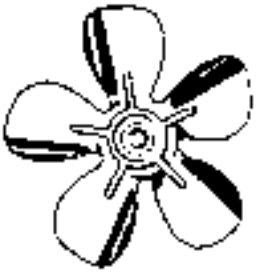

5/16" Bore Hub

Part #	Type	Dia.	Pitch	Rot.	Hub Location	LIST
S-7551	Blower	5-1/2	27°	CW	Back	$39.00
S-7571	Blower	7	27°	CW	Back	$14.20
S-7572	Sucker	7	27°	CCW	Front	$14.20
S-7581	Blower	8	24°	CW	Back	$32.90
S-7582	Sucker	8	24°	CCW	Front	$32.90
S-7591	Blower	9	26°	CW	Back	$17.80
S-7592	Sucker	9	26°	CCW	Front	$36.40
S-7593	Blower	10	20°	CW	Back	$37.20
S-7594	Sucker	10	20°	CCW	Front	$37.20
5140C		12	28°	CW	Front	$55.00

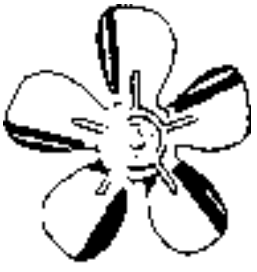

Hubless Fan Blades

Part #	# of Blades	Fan Dia.	Fan Output (CFM)	LIST
S-7001	2	7-3/4	180	
S-7002	4	7-3/4	210	
S-7003	4	8-3/4	311 / 332	
S-7004	4	10	414 / 470	$133.00

For Blower Fans, use G.E. CCW rotation motors and mount fan with side having stamped arrow toward motor. For Suction Fans, use G.E. CW rotation motors and mount fan with side having stamped arrow away from motor.

PLASTIC FAN BLADES

Part #	Diameter	Shaft	No. of Blades	Rot.	LIST
FB350	3-1/2"	3/16"	4	CW	$8.00
FB401-SUP	4"	1/8"	5	CW	$7.60
ACMwE-2403	4"	3/16"	5	CW	$7.60
FB403	4"	1/8"	5	CCW	$8.70
FB404	4"	3/16"	5	CCW	$7.60
FB450	4-1/2"	1/8"	5	CCW	$7.10
FB501	5"	3/16"	5	CW	$11.10
FB504	5"	3/16"	5	CCW	$9.40
FB550	5-1/2"	3/16"	4	CCW	$9.20
FB455	5-9/16"	3/16"	5	CCW	$9.00
FB601	6"	3/16"	6	CW	$10.60
FB604	6"	3/16"	4	CCW	$10.60
FB650	6-1/2"	3/16"	5	CW	$11.80
FB660	6-3/8"	7/32"	5"-25DEG	CW	$11.10
FB665	6-3/8"	7/32"	5"-12DEG	CW	$10.60
4VEA009	7-3/4"	Hubless	30° Pitch		
4VEA006	9"	Hubless	31° Pitch		$31.30
4VEA007	10"	Hubless	28° Pitch		$28.20

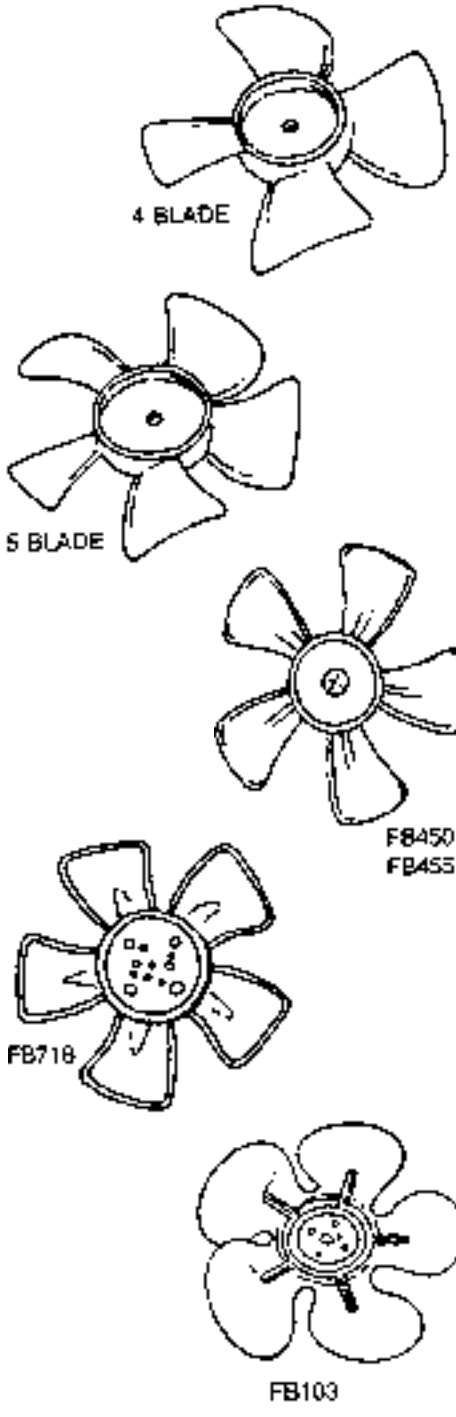

Rotation determined by facing air discharge

BLOWER SHAFTS

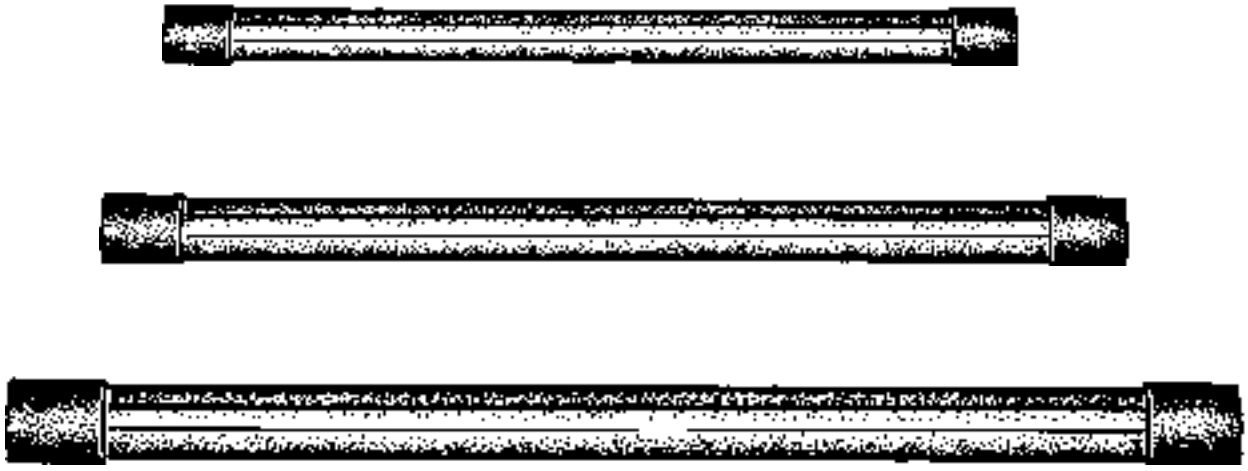

Features

- Sized to bearing manufacturers specifications
- Slabbed on pulley end
- Rust protected
- Individually wrapped
- P61920-ALLrotective cap (both ends)
- Part number & size on every shaft

Part #	Diam.	Length	Reference #	LIST
38-2205-01-EME	5/8"	20"	M90-255	$85.80
61212-ALL	3/4"	12-3/4"	8-5-495C, 2100002	$75.40
61400	3/4"	14"	8-5-245C, 2100159	$49.90
61610-AIR	3/4"	16-5/8"	8-5-240C, G10, G110, 2100011, 2100161	$60.00
61800-AIR	3/4"	18"	8-5-247C, 8-5-241C, 2100012	$63.10
61920	3/4"	19-1/8"	G12, 2100168	$115.90
62000-AIR	3/4"	20"	M90-256, RS620	$68.40
62200-AIR	3/4"	22"	2100013	$72.00
62400-AIR	3/4"	24"	8-5-243C	$76.60
63600-ALL	3/4"	36"		$191.00
82000-ALL	1"	20"	G15-72, 2100165, 2100078, 2100081, 2100076	
83600-ALL	1"	36"	P-S-209, M90-270, 2100168, 2100052, 2100054	

BEARINGS

Pillow Block Bearings



Part #	Shaft Dia.	LIST
VPS-210AH	5/8"	$141.70
VPS-212AH	3/4"	$137.60
VPS-216AH	1"	$149.30
VPS-218AH	1-1/8"	$348.00
VPS-219AH	1-3/16"	$176.60
VPS-220AH	1-1/4"	-
VPS-223AH	1-7/16"	$208.00

Shaft / Thrust Collar
(includes hollow head (allen) set screws



Part #	Outer Dia.	Inside Dia.	LIST
2165	1-1/4"	3/4"	$117.40
2166	1-1/2"	1"	$35.40

packaged 2 per kit

Ball Bearings



Part #	Bore Size	OD	Replaces	LIST
4336-1	3/4"	1-13/16"	LRCR	$44.10
4346-1	1"	2-1/4"	RCR	$52.80
38-2590-01	1"	2-17/32"	RCSM-2PK	$309.00

Sleeve Bearings (2 bearings & 2 sleeves)



Part #	Bore Size	OD	Replaces	Type	LIST
4036-2	3/4"	1-25/32	Delhi	Oil	$89.00
4046-2	1"	2-1/2"	Delhi	Oil	
4135-2	5/8"	1-7/8"	Lau	Sealed	$162.00
4136-2	3/4"	1-13/16	Delhi	Sealed	$81.60
4137-2	3/4"	1-13/16	Lau & Lennox	Sealed	$64.60
4138-2	3/4"	1-7/8"	Torin	Sealed	$64.60
4146-2	1"	2-1/2"	Delhi	Sealed	
4147-2	1"	2-1/2"	Lau & Lennox	Sealed	$122.00
4148-2	1"	2-1/2"	Torin	Sealed	$122.00

CAST IRON FHP SHEAVES

Single Groove Variable Pitch for A/B Belts



- All sheaves are fitted with hollow head set screws and have keyway
- Any standard single groove sheave can be used as a companion sheave
- Made of close-grain cast iron with a lacquer finish
- Accurately machined and balanced

Part #	Bore Size	Outside Dia.	Pitch	LIST
1VL25-1/2	1/2	2.5	-	$102.50
1VL25-5/8	5/8	2.5	-	$102.50
1VL30-1/2	1/2	2.87	-	$104.00
1VL30-5/8	5/8	2.87	-	$123.80
1VL34-1/2	1/2	3.15	1.9-2.9	$96.20
1VL34-5/8	5/8	3.15	1.9-2.9	$96.20
1VL34-3/4	3/4	3.15	1.9-2.9	$137.40
1VL40-1/2	1/2	3.75	2.4-3.4	$115.20
1VL40-5/8	5/8	3.75	2.4-3.4	$97.50
1VL40-3/4	3/4	3.75	2.4-3.4	$139.20
1VL40-7/8	7/8	3.75	2.4-3.4	$97.50
1VL44-1/2	1/2	4.15	2.8-3.8	$124.40
1VL44-5/8	5/8	4.15	2.8-3.8	$105.20
1VL44-3/4	3/4	4.15	2.8-3.8	$150.20
1VL44-7/8	7/8	4.15	2.8-3.8	$146.00

Part #	Bore Size	Outside Dia.	Pitch	LIST
1VP44-1-1/8	1-1/8	4.15		$145.50
1VP50-5/8	5/8	4.75	3.4-4.4	$146.00
1VP50-3/4	3/4	4.75	3.4-4.4	$176.40
1VP50-7/8	7/8	4.75	3.4-4.4	$176.90
1VP50-1-1/8	1-1/8	4.75	3.4-4.4	$176.90
1VP56-5/8	5/8	5.35	4.0-5.0	$184.50
1VP56-3/4	3/4	5.35	4.0-5.0	$263.50
1VP56-7/8	7/8	5.35	4.0-5.0	$238.20
1VP56-1-1/8	1-1/8	5.35	4.0-5.0	$238.20
1VP62-5/8	5/8	5.95	4.6-5.6	$344.00
1VP62-3/4	3/4	5.95	4.6-5.6	$610.00
1VP62-7/8	7/8	5.95	4.6-5.6	$291.30
1VP62-1-1/8	1-1/8	5.95	4.6-5.6	$291.30

Double Groove Variable Pitch

Part #	Bore Size	Outside Dia.	Pitch	LIST
2VP42-1-1/8	1-1/8	4.15	-	-
2VP42-7/8	7/8	4.15	2.8-3.8	$264.60
2VP56-1-1/8	1-1/8	5.35	4.0-5.0	$359.00
2VP60-1-1/8	1-1/8	6.00		$458.00
2VP60-1-3/8	1-3/8	6.00		$458.00
2VP68-1-3/8	1-3/8	6.70		$508.00
2VP75-1-3/8	1-3/8	7.40		$771.00

Part #	Description	LIST
22751	3/16" Key (6 pack)	$8.30
22752	1/4" Key (6 pack)	$10.10





Single Groove for A Belts

- Sheaves are equipped with square head set screws and have keyway
- Ideal small drives for attic fans, furnace blowers, air conditioning units or any light applications

Part #	Bore Size	Outside Dia.	Pitch	LIST
AK54-5/8	5/8"	5.25"	5"	$97.40
AK54-3/4	3/4"	5.25"	5"	$104.80
AK54-1	1"	5.25"	5"	$117.30
AK64-5/8	5/8"	6.25"	6"	$140.00
AK64-3/4	3/4"	6.25"	6"	$134.60
AK64-1	1"	6.25"	6"	$114.50
AK74-5/8	5/8"	7.25"	7"	$332.00
AK74-3/4	3/4"	7.25"	7"	$163.20
AK74-1	1"	7.25"	7"	$135.40
AK84-5/8	5/8"	8.25"	8"	$542.00

Part #	Bore Size	Outside Dia.	Pitch	LIST
AK84-3/4	3/4"	8.25"	8"	$190.10
AK84-1	1"	8.25"	8"	$165.60
AK94-3/4	3/4"	9.25"	9"	$213.40
AK94-1	1"	9.25"	9"	$183.20
AK104-3/4	3/4"	10.25"	10"	$286.00
AK104-1	1"	10.25"	10"	$196.50
AK114-3/4	3/4"	11.25"	11"	$710.00
AK114-1	1"	11.25"	11"	$307.00
AK124-3/4	3/4"	12.25"	12"	$808.00
AK124-1	1"	12.25"	12"	$388.00

CAST IRON FHP SHEAVES

Cast Iron Sheaves with Interchangeable Hubs

Part #	Bore Size	LIST
H-1/2	1/2"	$76.10
H-5/8	5/8"	$55.50
H-7/8	7/8"	$38.60
H-1	1"	$37.80
H-1-1/8	1-1/8"	$37.80
H-1-1/2	1-1/2"	$31.10
H-1-3/16	1-3/16"	$31.10
H-1-5/16	1-5/16"	$55.50
H-1-3/8	1-3/8"	$31.10
H-1-7/16	1-7/16"	$31.10
22751	3/16" Key Stock	$8.30
22752	1/4" Key Stock	$10.10

- Two-bolt design. Two 1/4-20 x 3/4" cap - screws provided
- Malleable iron construction
- For 1/2" through 1-3/8" bore ranges
- Packaged individually

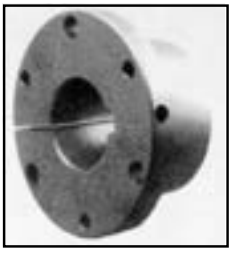

Single Groove Bushing Type Sheave

Part #	Diameter			LIST
	O.D.	Datum "A"	Datum "B"	
BK52H	4.95	4.20	4.60	$91.30
BK55H	5.25	4.50	4.90	$93.20
BK57H	5.45	4.70	5.10	$93.70
BK60H	5.75	5.00	5.40	$93.70
BK62H	5.95	5.20	5.60	$98.80
BK65H	6.25	5.50	5.90	$105.30
BK67H	6.45	5.70	6.10	$108.40
BK70H	6.75	6.00	6.40	$112.20
BK72H	6.95	6.20	6.60	$117.40
BK75H	7.25	6.50	6.90	$125.30
BK77H	7.45	6.70	7.10	$123.80
BK80H	7.75	7.00	7.40	$125.90
BK85H	8.25	7.50	7.90	$139.80
BK90H	8.75	8.00	8.40	$148.80
BK95H	9.25	8.50	8.90	$160.00
BK100H	9.75	9.00	9.40	$166.10
BK105H	10.25	9.50	9.90	$173.60
BK110H	10.75	10.00	10.40	$182.70
BK115H	11.25	10.50	10.90	$188.40
BK120H	11.75	11.00	11.40	$202.10
BK130H	12.75	12.00	12.40	$221.20

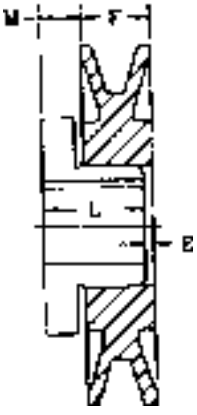

Double Groove Bushing Type Sheave

Part #	Diameter			LIST
	O.D.	Datum "A"	Datum "B"	
2BK55H	5.25	4.50	4.90	$183.60
2BK57H	5.45	4.70	5.10	$186.70
2BK60H	5.75	5.00	5.40	$190.90
*2BK62H	5.95	5.20	5.60	*$193.40
2BK65H	6.25	5.50	5.90	$208.60
2BK67H	6.45	5.70	6.10	
2BK70H	6.75	6.00	6.40	$218.00
2BK80H	7.75	7.00	7.40	$253.10

*These sizes are furnished with special keys to fit standard depth keyseats.

V-BELTS

BROWNING

Recommended for long dependable service and superior performance on heavy duty A, B, C, D and E section or multiple V-belt drives.

The V-belts are the No. 1 choice of industry for heavy duty conventional V-belt drives.
Part number is inside circumference of belt.

AX and BX Belts are also available, please ask your local branch for more information.

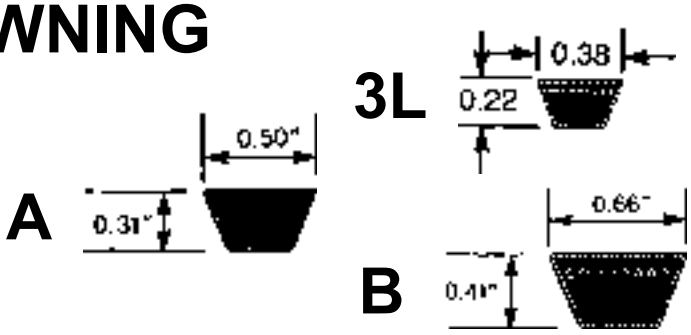

Part #	LIST
3L180	$20.10
3L190	$20.10
3L200	$20.10
3L210	$20.10
3L220	
3L230	$22.40
3L240	
3L250	$22.40
3L260	$26.20
3L270	$26.60
3L280	$27.40
3L290	$27.90
3L300	$28.30
3L310	$28.50
3L320	$28.90
3L330	$42.30
A24	$21.10
A25	$21.40
A26	$21.70
A27	$22.00
A28	$22.40
A29	$22.70
A30	$23.00
A31	$23.40
A32	$23.90
A33	$24.20
A34	$24.70
A35	$25.10
A36	$25.50
A37	$26.20
A38	$26.70
A39	$27.30

Part #	LIST
A40	$27.60
A41	$28.00
A42	$28.70
A43	$29.30
A44	$29.60
A45	$29.90
A46	$30.10
A47	$30.40
A48	$30.70
A49	$31.10
A50	$31.40
A51	$31.80
A52	$32.10
A53	-
A54	-
A55	$33.30
A56	$33.60
A57	$33.90
A58	$34.40
A59	$34.80
A60	$35.10
A61	$35.60
A62	$35.90
A63	$36.40
A64	$36.80
A65	$37.10
A66	$37.60
A67	$38.10
A68	$38.40
A69	$43.70
A70	$40.10
A71	$40.50

Part #	LIST
A72	$45.20
A73	$45.60
A74	$44.40
A75	$41.80
A76	$47.20
A77	$48.00
A78	$47.10
A79	$49.40
A80	$50.20
A81	$51.00
A82	$51.70
A83	$53.20
A84	$54.00
A85	$53.90
A86	$54.70
A87	-
A88	$56.20
A90	$51.80
A92	$59.80
A93	$60.40
A96	$59.40
A100	$74.70
B28	$31.60
B30	$33.00
B31	$33.80
B32	$33.20
B33	$35.00
B34	$32.00
B35	$32.70
B36	$33.60
B37	$34.90
B38	$35.90

Part #	LIST
B39	$36.70
B40	$37.50
B41	$38.40
B42	$39.20
B43	$40.00
B44	$40.80
B45	$41.60
B46	$42.40
B47	$43.10
B48	$43.70
B49	$44.40
B50	-
B51	-
B52	$46.20
B53	$46.50
B54	$47.00
B55	$47.30
B56	$47.70
B57	$48.00
B58	$48.30
B59	$48.70
B60	$49.00
B61	$49.60
B62	$50.30
B63	$51.00
B64	$51.60
B65	$52.30
B66	$52.80
B67	$53.40
B68	$53.90
B69	$54.50
B70	$55.30

Part #	LIST
B71	$56.00'
B72	$56.60
B73	$57.30
B74	$58.10
B75	$58.70
B76	$59.60
B77	$60.40
B78	$61.20
B79	$62.00
B80	$62.90
B81	$63.60
B82	$65.30
B83	$65.70
B84	$66.40
B85	$66.90
B86	$67.60
B87	$68.20
B88	$69.50
B89	$70.20
B90	$71.10
B91	$72.30
B92	$73.50
B93	$74.30
B94	$75.10
B95	$75.90
B96	$76.70
B97	$77.20
B98	$83.80
B99	$78.40
B100	$78.40

ADJUSTABLE V-BELTS

- Ideal temporary or permanent replacement for conventional rubber belts
- Easy snap & twist assembly

Part #	Width	Description	LIST
0418030-BPT	A	5 ft. sleeve	$159.90
0418050-BPT	B	6 ft. sleeve	$180.20



3-PHASE LINE VOLTAGE MONITORS

ICM

ICM450

Features and Applications:

- Programmable - 25 fault memory storage
- Independent high/low voltage settings for dual voltage compressor applications
- Monitors/identifies front & back side faults
- High temperature LCD to 167°F
- 190-600 VAC operation
- Simultaneous voltage display - no scrolling
- Line voltage programmable
- Reset - auto or manual
- 7-step pushbutton setup
- Monitors: voltage unbalance, high/low voltage, phase loss, reversal, incorrect sequencing, rapid short cycling
- UL and CSA for building code compliance

Specifications

Input:

- Voltage: 190-600 VAC
- Voltage Unbalance: adj. 2-25%
- Control: 18-240 VAC
- Frequency: 50/60 Hz

Output:

- Relay, SPDT
  n.o.: 20 amps
  n.c.: 10 amps

Cross Reference:

- Diversified: AC-2020, AC-301, AC-302
- Motorsaver: 455
- SSAC: QLM/QLV
- Timemark: 265
- Wagner: WPC-800
- Watsco: EAC-800, EAC-8000

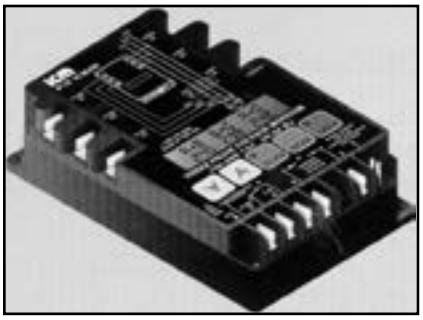

Part #	LIST
ICM450	$711.00

ICM442

Features and Applications:

- Low cost, rugged motor temperature monitoring device designed to shut off power to the motor before thermal damage occurs.
- Protects against over termperature in motor windings
- Control duty SPST relay layout: 10 amp, 250 VAC
- Uses up to four (4) 100 Ohm thermistors in series

Specifications

Input:

- 3-Phase Voltage: 200-575 VAC
- Frequency: 50/60Hz
- Thermistors: Four (4) 100Ω thermistors in series

Output:

- Relay Rating: 250 VAC at 10 A

- Voltage unbalance: Adjustable 2-25%
- Control: 115-277 VAC
- Control duty SPST relay layout: 10 amps, 250 VAC



Typical System Diagram for ICM400 and ICM450 3-Phase Voltage Monitors

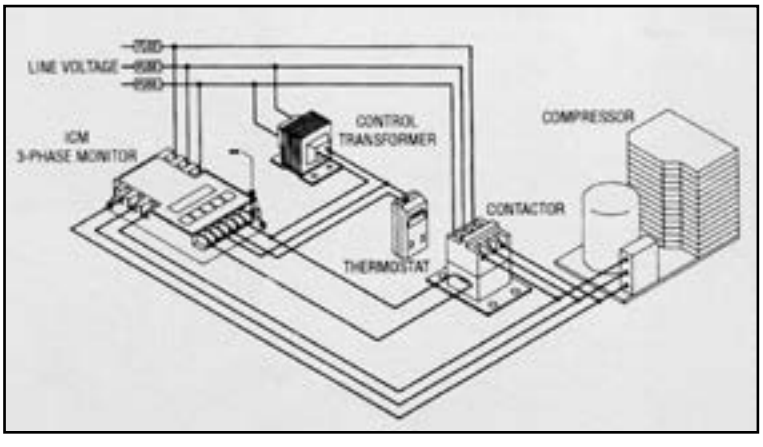

DELAY ON MAKE TIMERS

ICM

APPLICATION	TIME DIAGRAM	MODE OF OPERATION
"Delay ON" General purpose "delay on make" timing function. Ideal for compressor staging and stagger-starting multiple units. Helps to reduce power surges in multiple compressor applications.	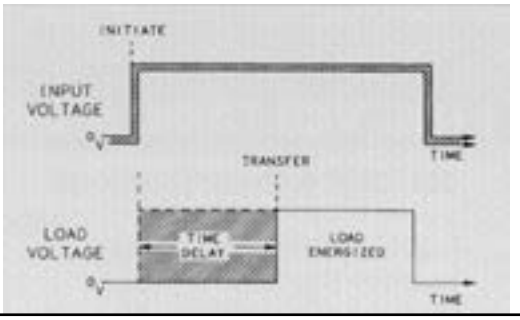	When power is applied to the input, the time delay begins. After the time delay is complete, the load energizes and remains energized as long as power is applied. The control is reset by removing power during or after the time delay period.

ICM102

Features and Applications:

- Universal voltage operation
- Higher, 1.5 amp power rating
- Knob-adjustable time delays
- Works with anticipator-type thermostats
- One model replaces many in field
- Ideal for compressor staging
- Simple, 2 wire hookup
- Compact 2" x 2" package

Specifications

- 18-240 VAC
- 1.5 amps
- 15 amp inrush
- SPST, N.O.
- knob adjustable time delays range .1-600 sec. (10 min.)

Cross Reference:

- Diversified: AC-800
- Fixed volt: ASC-600/601
- Gemline: 1C310/1C213
- Hitech HI-820
- Mars 32391 / 32367
- Robertshaw 3310-068
- Supco: TD-68 D-69
- Watsco: EAC-705/706

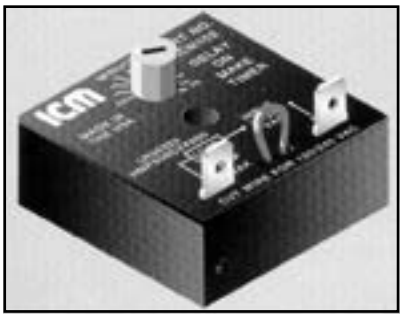

Part #	LIST
ICM102	$67.50

ICM103

Features and Applications:

- Swtich settable time delays
- Precise digital timing
- Ideal for ice machine applications
- Universal voltage operation
- Compact 2" x 2" package
- Epoxy-encapsulated circuitry

Specifications

- 18-240 VAC
- 1 amp
- 10 amp inrush
- SPST, N.O.
- switch settable time delays range 1-1023 sec.

Cross Reference:

- Gemline: 1C310/1C213
- Hitech HI-820
- Mars 32394 / 32396
- Robertshaw 3310-068
- Supco: TMF-19, TMF-80
- Watsco: 7061

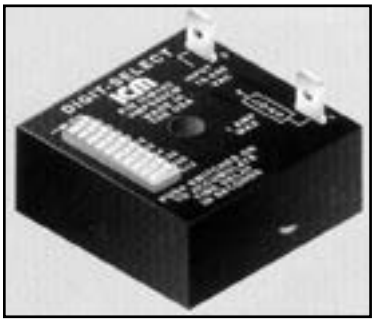

Part #	LIST
ICM103	$87.50

DELAY ON BREAK TIMERS

ICM

APPLICATION	TIME DIAGRAM	MODE OF OPERATION
"Anti short-cycle" "OFF delay on break" Helps to protect air conditioning, refrigeration and heat pump equipment from damage which may be caused by the rapid short-cycling of compressors.	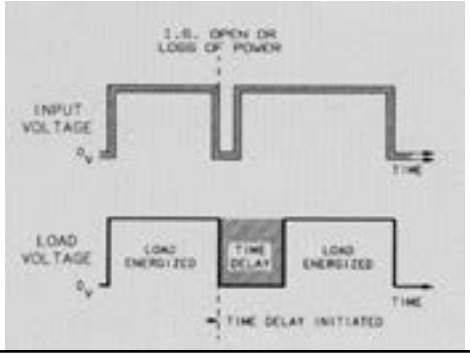	Upon application of power, the load is energized. When the thermostat opens or there is a loss of power, the load is de-energized and the delay period begins. The compressor will not start again during the delay period.

ICM203

Features and Applications:

- Universal voltage operation
- Higher, 1.5 amp power rating
- Compressor lockout/anti-short cycle timer
- Helps to protect compressors frm damage caused by rapid short cycling
- Simple 2 wire hookup
- Compact 2" x 2" package

Specifications

- 18-240 VAC
- 1.5 amps
- 15 amp inrush
- SPST, N.O.
- knob adjustable delays .03-10 min. (1.8-600 sec.)

Cross Reference:

- Diversified: AC-503, ASC-501, ASC-502
- Gemline: 1C320
- Mars 32392
- Robertshaw 3310-072
- Supco: TD-73
- Watsco: EAC-501-ADJ, EAC-501-ADJ-X

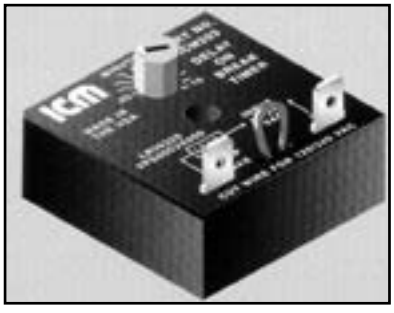

Part #	LIST
ICM203	$77.90Ihit

ICM206

Features and Applications:

- Compressor lockout/anti-short cycle timer
- Integral low voltage brownout protection
- Eliminates relay chatter due to thermostat bounce or tampering
- Works with anticipator-type thermostats
- Patented: U.S. patent No. 4991049

Specifications

- 18-30 VAC
- 1.5 amps
- 15 amp inrush
- SPST, N.O.
- 204: 3 min. fixed time delay
  205: 5 min. fixed time delay
  206: 10 min. adjustable delay

Cross Reference:

- Gemline: 1C243
- Mars 32381 / 32382
- Robertshaw 3310-183, 3310-305
- Supco: TL243, TL245
- Watsco: EAC-426-180, EAC-426-300, EAC-426-ADJ

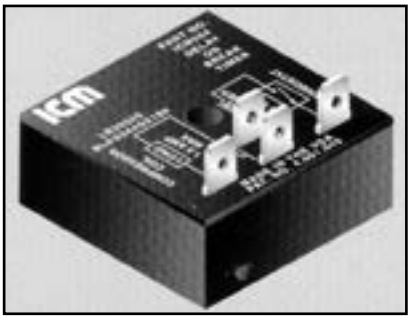

Part #	LIST
ICM206	$73.30

LOCKOUT RELAYS

ICM

ICM220

Features and Applications:

- Low cost lockout relay
- Helps eliminate nuisance lockouts due to impedance relay failure
- Ideal for use with safety/interlock switches
- Replaces impedance relays Series 84 & 93

Specifications

- 18-30 VAC
- Frequency: 50/60 Hz
- Power consumption: 2 watts max/lockout
- Relay: 1 form C
- Contacts: 2 amps max. @ 30VAC resistive

Cross Reference:

- Essex: Impedance Relays Series 84 & 93

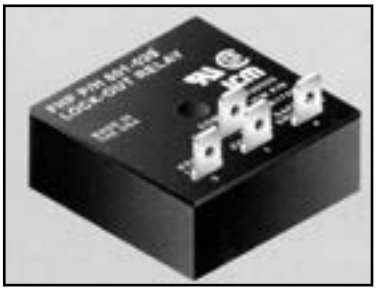

Part #	LIST
ICM220	$116.20

BYPASS TIMERS

ICM

ICM175

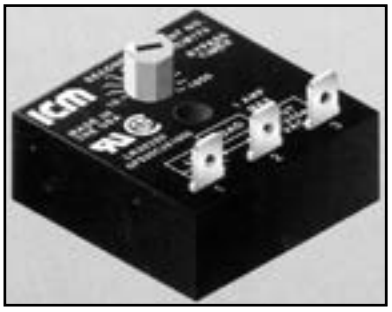

Features and Applications:

- Designed to bypass a low pressure switch or other device during startup
- Ideal for low ambient startups
- Integral component for "winter start" kits
- Helps to reduce nuisance lockouts
- Universal AC voltage operation
- Knob-adjustable time delays
- Epoxy-encapsulated circuitry

Specifications

- 18-240 VAC
- 1 amp
- 10 amp inrush
- knob-adjustable time delays: 10-1000 sec.

Cross Reference:

- Mars: 32395
- Supco: TDP68

Part #	LIST
ICM175	$79.10

SINGLE PHASE LINE MONITORS

ICM492

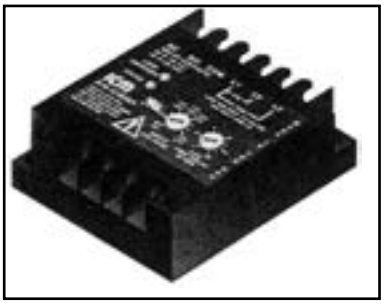

Features and Applications:

- Protects against over and under voltage, and rapid short cycling caused by transient faults and power interruptions
- Easy-view, back lit digital display
- Adjustable anti-short cycle time delay
- Adjustable response time
- Control mode (optional)
- 5-fault memory
- Universal line voltage input
- Heavy duty SPDT relay output
- Universal control voltage input (for integrating a thermostat)

Specification:

- Voltage set point: 95-280 VAC
- Anti-short cyle time delay: 0-720 seconds
- Over voltage setting: 5-25%
- Under voltage setting: 5-25%
- Control Mode: On and Off
- Response time: 0.1 to 10 seconds

Inputs:

- Voltage: 80-300 VAC
- Frequency: 60/60 Hz
- Accuracy: ±2%
- Low Power Consumption: Maximum 50 mA @ 120V, maximum 100 mA @ 240V
- Control Voltage; 24 - 240 VAC

Output:

- Tyoe: Dry relay contacts
- Form: SPDT
- Relay contact ratings:
  - N.C. contacts: 10A resistive @ 277 VAC
  - N.O. contacts: 10A resistive @ 277 VAC
  - Connection terminal: 0.25" male fast-on

Part #	LIST
ICM491	$207.70

HEAD PRESSURE CONTROLS

ICM325A

ICM



Features and Applications:

- Near field communication using the ICM OMNI App
- Inputs for two temperature sensors or two pressure sensors
- Heat pump bypass for full speed operation in heating mode
- Jumper selectable cool active reversing valve enabling
- Jumper selectable control voltage enabling
- Universal input voltage 120-600 VAC
- Univeral Control voltage 24-240 (jumper enabled)
- Capable of controlling more than 1 motor to a maximum of 10 amps

Specifications

- Line Voltage: 20-600 VAC
- Control voltage: 24-240 (Jumper enabled)
- Frequency: 50-60 Hz
- Operating Temperature: -40°F to +176°F (-40°C to +75°C)
- Temperature Sensors: 10K ohm at 77°F (25°C)
- Heat pump reversing value Input: 24-240 VAC (Heat active default / jumper enabled cool active option)
- Motor to output: 10 amps maximum

Part #	LIST
ICM325A	

Replaces

ACT: FM2000 | Hoffman: 800,800A,800AA,814-50 | Ranco: E31Series | Johnson Controls: P66AAB/P66AAD | ICM: All Single Phase Head Pressure Control Models; ICM325H, ICM325HNV, ICM 326HN, ICM 327HN, ICM333. Including all single phase legacy LAQS Seires Head Pressure Controls

ICM325HN (120/480 VAC)



Features and Applications:

- Integral heat pump bypass circuitry allows electronic bypass of speed control
- Eliminates overshoots common to on/off and pressure switch controls
- Helps prevent evaporator freeze-ups, low pressure cut-outs and liquid-slugged compressors in low ambient conditions
- One model covers 120-480 VAC
- Features: hard start, low temperature cutoff, high temperature bypass
- Requires 24 VAC supply
- Controls up to 3 refrigerant circuits
- Typical application: heat pumps or air conditioners

Specifications

Input:

- Frequency: 50/60 Hz
- Control: 18-30 VAC 1.8 VA Max
- Line Input: 120/480 VAC

Output:

- Type: Triac
  - Max: 10 amps
  - Min: 100 mA
- Controls sleeve and ball bearing motors

Replaces

ACT: FM2000
Hoffman: 800, 800A, 800AA, 814-50, 816-10
Ranco: E31 Series

Part #	LIST
ICM325HN	

ICM326HN (120V or 240V)
ICM327HN (480V)



Features and Applications:

- Built-in transformer eliminates cost, reduces installation time and simplifies wiring. Direct set up from line voltage
- Helps prevent evaporator freeze-ups, low pressure cut-outs and liquid-slugged compressors in low ambient conditions
- Features: hard start, low temperature cutoff, high temperature bypass, isolated 24 VAC supply is built into the control
- Ideal for heat pumps, line voltage air conditioning and refrigeration
- Controls sleeve and ball bearing motors

Specifications

Input/Output Voltage

- **ICM 325HN:** (Input:18 - 30 VAC) (Input / Output: 120-480 VAC)
- **ICM326HN:** (Input / Output: 120 / 208 / 240 VAC)
- **ICM 327HN:** (Input / Output: 480 VAC)
- **Modulation:** 70°F to 100°F

Output:

- Type: Solid State
- Form: Triac
- Output current: Max 10amps, Min 100 mA

Ordering Information

- Standard model ICM325HN: 120 - 480 VAC
- Models with intergral transformers:
  - ICM326HN: 120 / 208 / 240 VAC
  - ICM327HN: 480 VAC

Part #	LIST
ICM326HN-ALL	$749.00
ICM327HN-ALL	

POST-PURGE FAN DELAYS
DUAL ON / OFF TIMING

ICM

ICM255



Open board, dual function fan delay timer to control circulating fan in A/C, heat pump and forced air systems; high power, relay output

Part #	LIST
ICM255	$116.80

POST-PURGE FAN DELAYS
OFF DELAY ONLY

ICM253



Post-purge fan delay timer with adjustable 12-390-second time delay

Part #	LIST
ICM253	$121.60

CAPACITORS

MARS

Higher voltages may be substituted for lower voltages in the same MFD rating.



125 V

Part #	Size	LIST
21-25-125V	A	$23.50
25-30-125V	A	$23.50
30-36-125V	A	$23.50
43-56-125V	A	$21.60
56-72-125V	A	$22.10
72-88-125V	A	-
88-108-125V	A	$18.00
108-130-125V	A	$18.40
124-156-125V	A	$18.60
145-175-125V	A	$19.10
161-193-125V	A	$19.60
189-227-125V	A	$20.20
200-240-125V	A	$23.10
216-259-125V	A	$21.80
233-292-125V	A	$22.20
270-324-125V	B	$23.50
300-360-125V	D	$29.80
324-388-125V	D	$24.10
340-408-125V	D	$31.70
378-440-125V	D	$27.70
400-480-125V	D	$30.20
460-552-125V	D	$30.00
540-648-125V	D	$32.10
590-708-125V	D	$37.20
708-850-125V	G	$52.90
829-995-125V	G	$43.90
1000-1200-125V	G	$71.40

250 V

Part #	Size	LIST
21-25-250V	A	$19.30
25-30-250V	A	$28.80
30-36-250V	A	$28.80
36-43-250V	B	$28.80
43-56-250V	B	$28.80
56-72-250V	B	$21.60
72-88-250V	D	$26.10
88-108-250V	D	$28.10
108-130-250V	D	$32.40
124-156-250V	D	$36.30
145-175-250V	F	$36.90
161-193-250V	E	$40.30
189-227-250V	G	$46.60
216-259-250V	G	$50.90
233-292-250V	G	$53.00
270-324-250V	G	$59.70

330 V

Part #	Size	LIST
21-25-330V	B	$19.50
25-30-330V	B	$32.30
30-36-330V	D	$34.70
36-43-330V	D	$36.90
43-56-330V	D	$40.70
56-72-330V	D	$45.60
72-88-330V	E	$32.60
88-108-330V	F	$33.50
108-130-330V	G	$34.70
124-156-330V	G	$35.60
145-175-330V	H	$45.20
161-193-330V	H	$47.30
189-227-330V	H	$51.70
216-259-330V	H	$53.80
270-324-330V	H	$62.30

Code	Size (inches)
A	1-7/16 x 2-3/4
B	1-7/16 x 3-3/8
C	1-7/16 x 4-3/8
D	1-13/16 x 3-3/8
E	1-13/16 x 4-3/8
F	2-1/16 x 3-3/8
G	2-1/16 x 4-3/8
H	2-9/16 x 4-3/8
J	1-5/16 x 2-5/32
K	1-29/32 x 2-29/32
L	1-31/32 x 3-21/32

Run or Start Capacitor Accessories

Part #	Description	LIST
11201	resistor	$7.00
11206	bracket 2-3/4	$8.90
11207	bracket 3-3/8	$4.50
11208	bracket 4-3/8	$12.60
11210	on motor cap 1-7/16	$282.10

ALLTEMP

Part #	Description	LIST
11211	on motor cap 1-13/16	$4.10
11212	on motor cap 2-1/16	$5.40
11213	on motor cap 2-9/16	-

CAPACITORS

The identified terminal should always be connected to the supply line on "R" terminal to prevent damage. Higher voltages may be submitted for lower voltages in the same MFD rating.



Dual Voltage 370/440V - Dual MFD Round / Oval

MFD	Round	Oval
10/5	10/5-370/440V-R	
15/3	15/3-370/440V-R	
15/5	15/5-370/440V-R	
15/10	15/10-370/440V-R	15/10-370/440V
20/5	20/5-370/440V-R	20/5-370/440V
20/15		20/15-370/440V
25/3	25/3-370	
25/4	25/4-370	
25/5	25/5-370/440V-R	25/5-370/440V
25/7.5	25/7.5-370/440V-R	
25/10	25/10-370/440V-R	25/10-370/440V
30/4	30/4-370	
30/5	30/5-370/440V-R	30/5-370/440V
35/4	35/4-370/440V-R	
35/5	35/5-370/440V-R	35/5-370/440V
35/7.5	35/7.5-370/440V-R	
35/10	35/10-370/440V-R	
40/5	40/5-370/440V-R	
40/7.5	40/7.5-370/440V-R	
40/10	40/10-370/440V-R	40/10-370/440V
45/4	45/4-370/440V-R	
45/5	45/5-370/440V-R	
45/7.5	45/7.5-370/440V-R	
50/5	50/5-370/440V-R	
50/7.5	50/7.5-370/440V-R	
50/10	50/10-370/440V-R	
55/5	55/5-370/440V-R	
55/7.5	55/7.5-370/440V-R	
55/10	55/10-370/440V-R	
60/5	60/5-370/440V-R	
60/7.5	60/7.5-370/440V-R	
60/10	60/10-370/440V-R	
80/5	80/5-370/440V-R	

Dual Voltage 370/440V - Single MFD Round / Oval

MFD	Round	Oval
2		2-370/440V
3		3-370/440V
4		4-370/440V
5	5-370/440V-R	5-370/440V
6	6-370/440V-R	6-370/440V
7.5	7.5-370/440V-R	7.5-370/440V
10	10-370/440V-R	10-370/440V
12.5	12.5-370/440V-R	12.5-370/440V
15	15-370/440V-R	15-370/440V
17.5	17.5-370/440V-R	17.5-370/440V
20	20-370/440V-R	20-370/440V
25	25-370/440V-R	25-370/440V
30	30-370/440V-R	30-370/440V
35	35-370/440V-R	35-370/440V
40	40-370/440V-R	40-370/440V
45	45-370/440V-R	45-370/440V
50	50-370/440V-R	50-370/440V
55	55-370/440V-R	
60	60-370/440V-R	
70	70-370/440V-R	
80	80-370/440V-R	

Run or Start Capacitor Accessories

Part #	Description	LIST
12204	bracket 1-5/16	$7.90
12205	bracket 1-29/32	$8.30
12206	bracket 1-31/32	$8.30
12210	1 hole boot	$7.90
12211	2 hole boot	$5.60
12212	3 hole boot	$30.60

SOFT STARTERS

SURE-START

Sure-Start Soft Starters
- Sure-Start3 (Three Phase Soft Starters)
- Sure-Start6 (Single Phase Soft Starters)

Features:

- Reduce light icker by lowering startup locked rotor amperage (LRA) up to 70%
- Diminish noisy compressor/motor startups allowing for smoother, quieter operation
- Automatically optimize in-rush current to the compressor/motor
- Reduce current stress, heat, and torque of the compressor/motor to extends the life
- Monitor low voltage sags to protect against equipment damage
- Are quick, easy, and ready to install in the field with wire leads and instruction



Typical Startup Torque Reduction

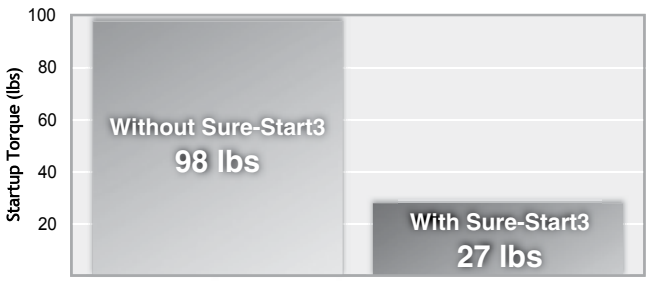

Sure-Start6 vs. Locked Rotor Amperage

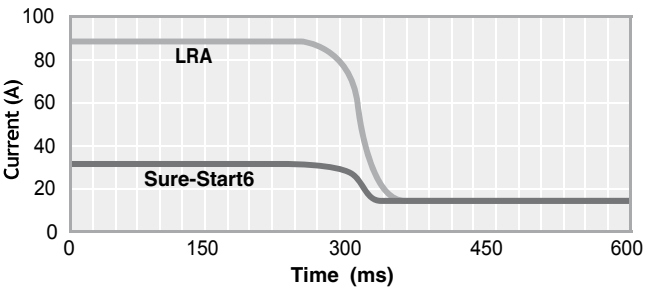

Sure-Start3 (60/50Hz)

Part #	Voltage	HP Range	LIST
SS3S2-10-US-208/230V	208-230VAC	2-10	
SS3S2-20-US-460V	460 VAC	2-20	

Sure-Start6 (60/50Hz)

Part #	Voltage	HP Range	LIST
SS6S0.5-1.75-USL115V	115 VAC	covers all	
SS6S2-3.5-USL-230V	230 VAC	1.5 to 3	$1,376.00
SS6S3.5-7-USL-230V	230 VAC	3.5 to 7	

HARD START KITS

ULTRA Series

2-wire Mechanical Potential Relay Hard Start

- OEM Approved Technology
- Voltage Sensing
- Instant Re-Start
- Easy 2-wire Installation
- 170-277 VAC
- 330 VAC Start Capacitor
- 2 Year Warranty

Part #	Application	Capacitator Size	Replaces Kickstart®	LIST
MPR5	1 to 3 hp	189-277µF	TO-5	$118.00
MPR1	3.5 to 5 hp	270-324 µF	KS-1	$132.10



3 Series

3-wire Mechanical Potential Relay Hard Start

- Voltage Sensing
- Instant Re-Start
- 35 Amp Relay Contacts
- 170-277 VAC
- 330 VAC Start Capacitor
- Includes EZ Snap Bracket for Quick Installation

Part #	Application	Capacitator Size	Replaces 5-2-1®	LIST
3W1	1 – 3 hp	88 – 108 µF	CSRU1	$80.20
3W2	3.5 – 4.5 hp	189 – 227 µF	CSRU2	$103.80
3W3	4 – 5 hp	270 – 324 µF	CSRU3	$103.80



SPP E Class Series

Electronic Potential Relay Technology
Economical Potential Relay, with the comfort of a backup safety.

- Electronic Potential Relay
- Backup Electronic Timing Circuit to Protect the Compressor
- Voltage Sensing
- Instant Re-Start
- Easy 2-wire Installation
- Can be used on PSC and CSIR
- 170-277 VAC (except SPP4E, 90-130 VAC) Type Compressors

Part #	Application	Capacitator Size	LIST
SPP-4E	1 – 3 hp	88-106 µF	$81.40
SPP-5E	1/3-2 hp	43-52 µF	$79.00
SPP-6E	1/2 – 3 hp	88–106 µF	$82.60
SPP-7E	1 – 4 hp	130–156 µF	$102.60
SPP-8E	1 hp and up	189–227 µF	$113.00
SPP-9E	1 hp and up	233-280 µF	$136.60
SPP-10E	3 hp and up	270-324 µF	-



SPP Super Boost Series

PTC Technology
The “Original” 2-wire Hard Start.

- Positive Temperature Coefficient Relay Technology (PTC)
- Field Proven Reliability
- Easy 2-wire Installation
- Most Economic
- 90-277 VAC

Part #	Increase in Torque	LIST
SPP	250%	$22.70
SPP-5	300%	$23.40
SPP-6	500%	$32.80
SPP-7S	600%	$70.50



*Kickstart® is a registered U.S. trademark of The Rectorseal Corporation.
*5-2-1® is a registered U.S. trademark of Five-Two-One, Inc.

HARD START KITS

ICM Rapid Start Series



Features:

- Differential voltage sensing
- Not effected by ambient temperature
- Recycles instantly (less than 1 second)

Part #	Description	Voltage	Max. Input Voltage	Range	LIST
ICM860	88 to 106 Mfd 330V Capacitor	90 to 277 VAC	390 VAC	2 - 5 HP	$107.00

REFRIGERATION RELAYS / OVERLOADS



URCO Series Ultimate Relay Capacitor Overload

Features/Benefits

- Replaces relay, capacitor and overload
- "Push-on" compressor terminals, and 1/4" capacitor terminals
- Designed for modern high efficiency compressors
- Helps older compressors to start and run cooler
- Easy mount clip for quick installation
- Prevents low voltage starting problems

Applications

- Domestic Refrigerator Compressors to 1/2 hp
- Light Commercial Refrigeration Compressors to 1/2 hp.
- Works on "RSIR", "CSIR", "PSC",& "CSR" compressors

3 N' 1 for High torque starts Run Capacitor Wiring for high efficiency systems

PART NO.	hp RATING	VOLTS	LIST
URCO210	1/3 to 1/2	115	$51.90
URCO410	1/4 to 1/3	115	$42.40
URCO810	1/12 to 1/5	115	$42.40



URSC10/URSC20 Ultimate Relay Start Capacitor

Features/Benefits

- Replaces current-type relays
- Provides a boost for hard start and unbalanced systems
- No additional wires required

Applications

- One size for all compressors from 1/20 hp to 1/2 hp
- For domestic and commercial refrigeration systems and freezers
- Works on "RSIR", "CSIR", "PSC", & "CSR" compressors

Replaces current-type relays

PART NO.	hp RATING	VOLTS	LIST
URSC10	1/20 to 1/2	120	$44.80
URSC20	1/20 to 1/2	240	$42.40

REFRIGERATION RELAYS / OVERLOADS

SUPCO


ICG

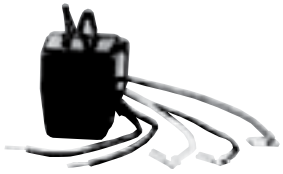
RO


RSC

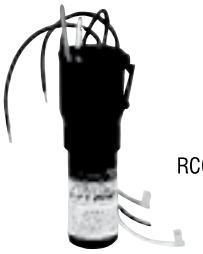
RCO

ICG and PO Series Relays

Features/Benefits

- ICG Series features a "snap-on" bracket
- PO Series installs on compressors with "pin-type" terminals.
- Fastest cool down time of any solid state relays
- Can be used with and without start capacitor.

Applications

- One size for all compressors from 1/12 hp through 1/2 hp.
- Replaces all current type relays.

RO & PRO Series Relay and Overload Combinations

Features/Benefits

- RO Series features "snap-on" bracket
- PRO Series installs on "pin-type" terminal.
- Locked rotor protection eliminates start winding overheating
- Can be used with and without start capacitor motors from 1/4 to 1/3 hp.

Applications

- Select the right match to replace refrigerator compressor relay and overload units from 1/12 through 1/2 hp, 115 – 230 VAC.

RSC Series Relay and Start Capacitor Combination

Features/ Benefits

- Replaces current-type relays
- Provides a boost for hard start and unbalanced systems
- Prevents low voltage starting problems

Applications

- One size for all compressors from 1/12 hp through 1/2 hp.
- For domestic and commercial refrigeration systems and freezers

RCO Series 3 N' 1 Relay, Overload and Start Capacitor Combination

Features/Benefits

- Replaces relay, overload and provides a boost for hard start and unbalanced systems
- Prevents low voltage starting problems

Selection Table For Refrigeration Systems Without Run Capacitors

PART NO.	RELAY	OVERLOAD	START CAPACITOR	MOUNTING	hp RATING	VOLTAGE (VAC)	LIST
ICG1	*			Quick Connect	1/12 - 1/2	115	-
ICG-220	*			Quick Connect	1/12 - 1/2	230	$17.70
PO115	*			Push - on	1/12 - 1/2	115	-
PO230	*			Push - on	1/12 - 1/2	230	-
RO81	*	*		Quick Connect	1/12 - 1/5	115	-
RO41	*	*		Quick Connect	1/4 - 1/3	115	-
RO82	*	*		Quick Connect	1/12 - 1/8	230	-
RO62	*	*		Quick Connect	1/6 - 1/5	230	-
RO42	*	*		Quick Connect	1/4 - 1/3	230	-
PRO81	*	*		Push - on	1/12 - 1/5	115	-
PRO41	*	*		Push - on	1/4 - 1/3	115	$26.00
PRO82	*	*		Push - on	1/12 - 1/8	230	-
PRO62	*	*		Push - on	1/6 - 1/5	230	-
PRO42	*	*		Push - on	1/4 - 1/3	230	
PRO22	*	*		Push - on	1/2 - 2/3	230	-
RCO810	*	*	*	Quick Connect	1/12 - 1/5	115	$42.40
RCO410	*	*	*	Quick Connect	1/4 - 1/3	115	$42.40
RCO210	*	*	*	Quick Connect	1/2	115	$51.90
RCO820	*	*	*	Quick Connect	1/12 - 1/8	230	-
RCO620	*	*	*	Quick Connect	1/6 - 1/5	230	-
RCO420	*	*	*	Quick Connect	1/4 - 1/3	230	-
RCO220	*	*	*	Quick Connect	1/2	230	-

Applications

- Select the right match to replace refrigerator compressor relay and overload units from 1/12 through 1/2 hp, 115 – 230 VAC.
- For all capillary systems

POTENTIAL RELAYS

UMSR Universal Motor Starting Relay

Wire-for-Wire replacement for all standard potential relays.

ICM's Universal Motor Starting Relay incorporates patented differential voltage sensing and a non-positional mounting configuration to offer a single replacement for all standard potential relays. Great way to reduce inventory. Ideal for A/C, commercial refrigeration, heat pump or any single-phase motor application up to 10 HP.

- replacement for all standard potential relays
- patented differential voltage setting
- no user adjustments required
- non-positional mounting configuration

Part #	LIST
UMSR50-ALL	$146.30



Std Duty Quick Connect Part #	LIST	H/D Screw Terminal Part #	LIST	Relay Type	Continuous Coil Voltage	Pick Up Min-Max	Drop Out Max.
		19002	$198.20	63	200	139-153	55
19003	$89.70	19003	$216.10	64	432	260-275	120
19004	$89.70	19004	$208.20	65	332	168-182	90
19171	$89.70	19005	$216.10	66	432	215-225	120
		19006	$224.40	67	457	295-315	125
		19007	$236.90	68	502	325-345	135
		19008	$208.20	69	375	180-195	105
		19009	$205.40	70	253	285-305	77
		19010	$224.40	71	420	212-232	121
		19550		Sump	130	111-134	40
		19551	$220.70	Pump	332	244-270	90

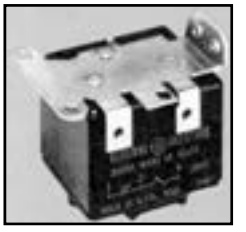



GENERAL PURPOSE SWITCHING RELAYS

SPDT Fan Relays

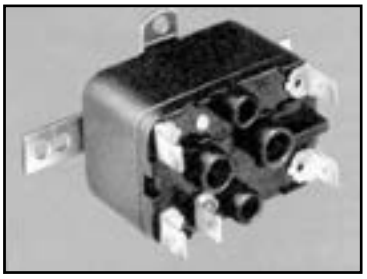

This series of relays are among the most popular relays used in air conditioning today. Quick-connect terminal.

Size: 2-3/8" x 1-5/8" x 1-1/2"
Inductive Rating 125/250 VAC: 15 amp inrush
Resistive Rating 125/250 VAC: 18 amp inrush
Full Load Amps: 12@ 120V; 8 @ 240V

Coil Voltage	Heavy Duty (SPNO-SPNC) Part #	LIST	Standard SPDT Part #	LIST
24	90380	$24.00	90293	$32.20
120	90382	$65.10	90294	$49.70
208/240	90384	$25.10	90295	$35.20

2-Pole Air Conditioning Relays

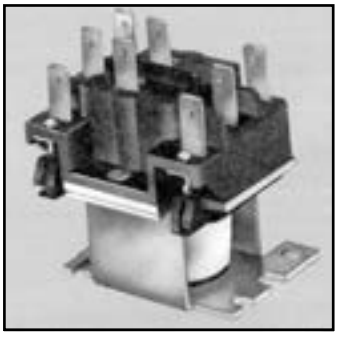

This series of switching relays are intended for many applications in air conditioning, refrigeration, and heating. Other uses include general purpose switching in appliances, fan controls and vending machines.

Terminals

Coil Voltage	Part # Power/Pilot	LIST	Part # Power/Pilot	LIST	Part # Power/Pilot	LIST
24	90340	$28.10	90343	$74.40	90346	$74.10
120	90341	$29.00	90344	$74.10	90348	$92.40
208/240	90342	$29.00	90345	$101.00		

Power resistive amps 15A @ 120/208/240V - 3/4 HP; FL Amps 12 @ 120V - 6 @ 208/240V
Pilot resistive amps 3A @ 120/208/240V - 1/10 HP

Relays for Motor Starting Circuits 25 Amp

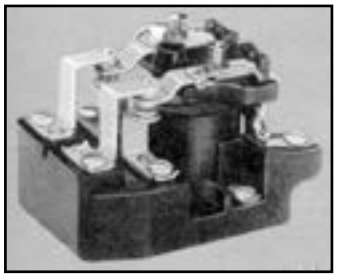

Coil Voltage	Part # DPDT	LIST
120	43014	$152.40

MAGNETIC LINE RELAYS



Features:

Used for remote control of heating and air conditioning systems and remote power switching of motors, power tools, fans and blowers.
18 FL amps.

Part #	Coil Voltage	Contact Arrangement	LIST
93001	terminal kit - converts screw to quick connect		$13.30

TOTALLY ENCLOSED MAGNETIC LINE RELAYS

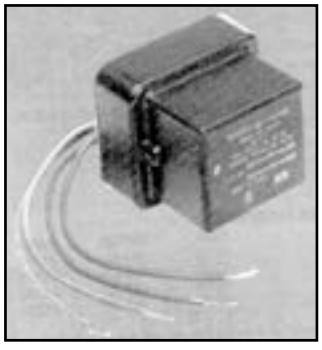

Features:

- designed for standard conduit box mounting for remote control of air conditioning and heating systems and remote power switching of motors, power tools, fans and blowers
- totally enclosed with heavy, impact resistant phenolic cover
- non-positional

Part #	Coil Voltage	Contact Arrangement	Max. Horsepower at 240 Volts		LIST
			NO	NC	
R8225A1017*	24	SPDT	1-1/2	3/4	$251.30

* SPDT relays may be used on SPST applications by eliminating use of yellow lead

RELAYS

RELECO

Series C2/C3
General Purpose Relay, Octal Plug-In

Part #	Contact	LED/Neon Indicator	Max. Switching Current (resistive)	Max. Switching Voltage	LIST
C2-A20X-24VAC	DPDT	yes	10	380	$46.80
C2-A20X-120VAC	DPDT	yes	10	380	$46.80
C2-A20X-240VAC	DPDT	yes	10	380	$49.40
C3-A30X-24VAC	3PDT	yes	10	250	$55.30
C3-A30X-120VAC	3PDT	yes	10	250	$55.30
C3-A30X-240VAC	3PDT	yes	10	250	$53.80



C2

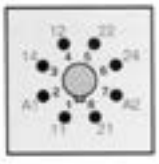

C2



C3

Series S2/S3
Socket Base

Part #	Description	LIST
S2-B	8 pin - octal base	$19.70
S2-S	8 pin - octal base	-
S3-B	11 pin base	$21.40
S3-S	11 pin base	$19.30



S2-B

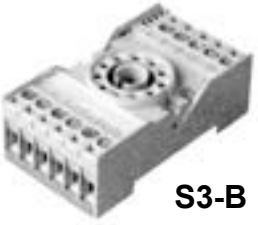

S3-B



S2-S



S3-S

Series CT2/CT3
Time Cube, Octal Plug-In

Part #	Function	Time Range	LIST
CT2A30/L-TCC	Off-delay	0,2 sec...12 min	$234.70
CT2E20/L	On-delay	0,2 sec...12 min	$159.10
CT2E25/L	On-delay	0,2 sec...12 min	$159.10
CT2-W30/H	On-delay	0,2 sec...12 min	-
CT3E30/H	On-delay	0,2 sec...12 min	$186.40



C2

RELAYS

RELECO

Series C7/C9
Miniature Square Base Relay, Plug-In Mounting



C7

Part #	Contact	LED/Neon Indicator	Max. Switching Current (resistive)	Max. Switching Voltage	LIST
C7A20X-24VAC	DPDT	yes	10	250	-
C7A20X-120VAC	DPDT	yes	10	250	-
C9A41X-24VAC	4PDT	yes	3	250	-
C9A41X-120VAC	4PDT	yes	3	250	-



Bottom view
C7



Bottom view
C9

Series S7/S9
Socket Base

Part #	LIST
S7-M	$14.70
S9-M	$21.00



S7-MP



S9-M

Series C5
Power Relay, 15 Amp Square Base, Plug-In, Flat Blade 4,8 x 0,5 mm, 3 Pole



Part #	Contact	LED/Neon Indicator	Max. Switching Current (resistive)	Max. Switching Voltage	LIST
C5A30X-24VAC	3PDT	yes	15	380	-
C5A30X-120AC	3PDT	yes	15	380	-
C5A30X-240AC	3PDT	yes	15	380	-



Bottom view

Socket Base

Part #	Description	LIST
CUS-12	11 pin, flat blade 4,8 x 0,5 mm Screws, 2 levels	$16.60



ELECTRICAL ACCESSORIES

Fan & Light Switches

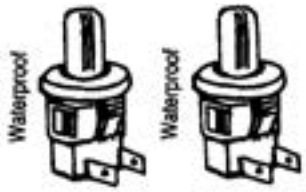

Part #	Description	LIST
ES18809-SUP	Fan SPST	$11.40
ES18810-SUP	Light SPST	$11.30
1301V-TOO	15a - 120V, 1P, silent, ivory	$3.10



Air Conditioner Disconnect Switches

Non-Metallic Disconnects

- Non-fusible single phase non-metallic air conditioner disconnects
- Corrosion resistant, weather proof and maintenance free
- On/Off switch mechanism so there is no pull-out to lose



Part #	Description	LIST
P-065-NA1-MAR	60 amp non-fused, single phase	$191.70

Metallic Disconnects

- A/C disconnect with on/off switch mechanism so there is no pullout to lose



Part #	Description	LIST
U065NA1	60 amp, 240V, 10 HP	$89.10

Pullout Disconnect With GFCI Receptacle

- 60 Amp, Non-Fused
- Pullout Type
- 240 Volt, Single Phase



Part #	Description	LIST
80308-MAR	Pullout Disconnet Receptacle	$446.00

ELECTRICAL ACCESSORIES

NEMA 3R Disconnect Switches

"Suitable as Motor Disconnects"

CIRCUIT-LOCK® NEMA 3R Enclosures with Switch

SHARED FEATURES

All aluminum cover and base.

- Base is pre-drilled for rear surface mounting.

Rain tight drip shield top.

- Rolled seamless sides.

HUBBELL Advantage

- CIRCUIT-LOCK® NEMA Type 3R enclosures are "Suitable as Disconnect" when used with the 30 or 60 amp controller/disconnect.
- Front activated lever allows mounting in tight spaces.



HBL16R93D



HBL13R89D

Part #	Amp	Poles	HP Rating 120V AC	240V AC	480V AC	600V AC	LIST
HBL13R92D	30	2	2	5	10	15	$283.00
HBL13R89D	30	3	3	7.5	15	20	$204.70
HBL16R93D	60	3	—	10	25	30	$411.00

AC Manual Toggle Controllers/Disconnects

30, 40, 50, 60 and 85A 600V AC

600V AC Manual Motor Controllers

Specifications

- **Electrical Performance**

Dielectric Voltage	2,200V AC minimum for 1 minute
Electrical Life	6,000 Cycles at rated switch load
Max. Working Voltage	600V AC RMS
Short Circuit Withstand Rating as Motor Controller	All Switches 125A max. RK5 fuses

- **Mechanical**

Mechanical Life	10,000 minimum cycles

- **Listings**

UL 508	Industrial Control Equipment File #E70402
CSA-C22.2 No.14	Industrial Control Equipment File # LR-46186

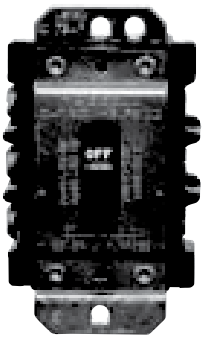

HBL7810D

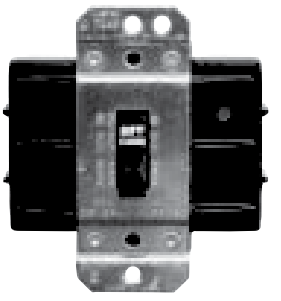

HBL7863D

Part #	Amp	Poles	Toggle Type	Wire	HP Rating 120V AC	240V AC	480V AC	600V AC	LIST
HBL7832D	30	2	Standard	—	2	5	10	15	$168.80
HBL7810D	30	3	Standard	—	3	7.5	15	20	$154.90
HBL7862D	60	2	Standard	—	—	10	15	20	$707.00
HBL7863D	60	3	Standard	—	—	10	25	30	$408.00

WIRE

Thermostat Wire

Part #	Description	LIST
18/2-PC-75M	CSA FT6, 60°C plenum thermostat wire 75m/roll 18 gauge	$177.20
18/3-PC-75M		$252.80
18/4-PC-75M		$302.00
18/6-PC-75M		$439.00
18/8-PC-75M		$541.00



Part #	Description	LIST
18/2-SC-75M	CSA LVT shielded control wire - stranded - 75m/roll 18 gauge	$273.80
18/3-SC-75M		$255.20
18/8-SC-75M		$1,049.00

TEW Wire

Stranded soft bare copper conductor, thermoplastic insulation. Internal wiring of electrical equipment and lighting fixtures.

	10 Ga	12 Ga	14 Ga	16 Ga	18 Ga
Cond. Amp	28	23	17	8	6
Black (B)	8010C-B	8012C-B	8014C-B	8016C-B	8018C-B
Blue (BL)			8014C-BL	8016C-BL	
Brown (BR)			8014C-BR		
Green (G)			8014C-G	8016C-G	
Red (R)	8010C-R	8012C-R	8014C-R	8016C-R	8018C-R
White (W)	8010C-W	8012C-W	8014C-W	8016C-W	8018C-W
Yellow (Y)			8014C-Y	8016C-Y	
LIST	**$208.70**	**$132.30**	**$91.60**	**$65.10**	**$43.50**



GTF Fixture Wire

Lighting fixtures where temperatures do not exceed 125c.



Part #	Gauge	Conductor Amp	LIST
8134C-B	14	17	$476.00
8134C-R	14	17	$476.00
8134C-W	14		$476.00

WIRE

Cabtire Wire Type SJ

Application: Power supply for tools and appliances where subjected to hard usage in damp or dry location.

Part #	Gauge	LIST
14-3	14/3	$3.10ft

Shielded Cable

Part #	Description	LIST
12/3-BX	Aluminium Amour	$4.40
14/2-BX		$2.60
14/3-BX		$3.50
10/3-TEC	Teck 600V PVC jacket, aluminum interlocking armour	$8.30
14/3-TEC	Teck 600V PVC jacket, aluminum interlocking armour	$4.60
TSRTK-050-2	1/2" Teck-Seal Cable Connector	

600V Copper





TECK 600V Copper Multi Conductor

Air Conditioning Whips

Pre-assembled whips for outdoor use for connection of air conditioners, heat pumps or other equipment. Flexible liquid tight PVC conduit with THHN conductors.

Part #	Description	Cond. Size	LIST
6500	1/2" x 6' PVC fitting	10 str.	$75.10
6750	3/4" x 6' PVC fitting	8 str.	$100.20



Liquid Tight Connectors

Lets you feed conductors quickly and easily... and then swivels into the position you desire for installation.

Part #	Description	LIST
PS0509NGY	1/2" SwivelLok connector	$30.50
PS0759NGY	3/4" SwivelLok connector	$47.80
19019	1/2" 0 to 90° connector	$19.30
19020	3/4" 0 to 90° connector	$25.00

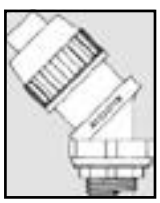



Nonmetallic Flexible Conduits

Part #	Size	LIST
8431	1/2"	-
8432	3/4"	-



Nonmetallic Fittings

Part #	Size	LIST
88403-ALL	1/2" straight	$6.20
88405-ALL	3/4" straight	$9.80



ELECTRICAL ACCESSORIES

Tattle-Tale Control Monitor

Part #	Description	LIST
TC-007	24-460 VAC or DC	$689.00



Compressor Stake On Repair Kit

- Wires are permanently attached
- Stainless steel screws
- Standard factory 600 volt, 65 strand wire
- Set of three colour coded wires

Part #	Description	LIST
QT2812	brass stake on, 12 gauge, 3 wire	$166.30
QT2810	brass stake on, 10 gauge, 3 wire	$172.90



Reducing Washers

Part #	Description	LIST
RW0705	3/4" x 1/2" (100/pk)	$0.60
RW1005	1" x 1/2" (100/pk)	$0.70



Cable Strain Relief

Part #	Description	LIST
KPK-M20-MVP-EX	Cable Strain Relief	$20.20



Electrical Fittings - BX/Romex/Armored-carded

Part #	Description	LIST
DUP038-HUB	3/8" arm/flex. duplex connector	$8.40



Electrical Romex (NM Cable) Fittings

Part #	Description	LIST
NMC038	3/8" (1/2" K.O.) Romex conn.	$3.00



BX & Greenfield Connectors

Part #	Description	LIST
SQ90038	3/8" 90° squeeze connector	$6.90
SQ050	1/2" squeeze connectors	$8.00
SQ90050	1/2" 90° squeeze connector	$12.70
SKZ050	1/2" box conn., (set screw type)	$2.70



ELECTRICAL ACCESSORIES

Standard Steel Utility Box (4" x 2-1/8" handy boxes)

Part #	Description	LIST
2020	2-1/8"D, 1/2" K.O.'s handy box	-



Steel Electrical Boxes & Extension Rings

Part #	Description	LIST
52171K	4" square box 2-1/8" deep, 1/2" & 3/4" K.O.'s	$30.20
53151K	4" square extension 1-1/2" deep, 1/2" & 3/4" K.O.'s	$30.10



52171K



53151K

Steel Electrical Box Covers

Part #	Description	LIST
52C6	blank 1/2" K.O. in center (4" square box)	$8.70
8361	one toggle switch (4" square box)	$8.70
8365	one duplex receptacle (4" square box)	$20.00
8367	two toggle switch (4" square box)	$24.80
8375	1 switch & 1 duplex receptacle (4" square box)	$24.80
8371	two duplex receptacle (4" square box)	$20.80
20C1	duplex receptacle (handy box)	$8.00
20C5	toggle switch (handy box)	$9.00
20C4	blank (handy box)	$8.60
54C6	4" octagon Blank-K.O.	$6.00
54C94	toggle switch (4" octagon box)	$12.30



52C6



8361



8365



8367



8375



8371



20C1



20C5



20C4



54C6



54C94

Wallplates

Part #	Description	LIST
NP1I	single toggle, plastic, ivory	$1.40
NP8I	duplex receptacle, plastic, ivory	$1.40

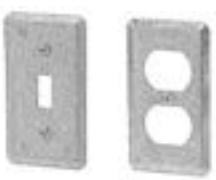

ELECTRICAL CONNECTORS

Female Flag

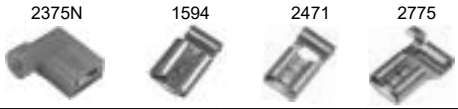

Width	Part #	QTY	LIST
22-18AWG			
.250	2375N-15	50	$41.40
.250	2375CS	100	$45.70
16-14AWG			
.250	2475N-15	50	$41.50
.205	2471CS	100	$38.40
.250	2475CS	100	$46.60
.250	2775BP	6	$5.60

Rings



Spades



SAE	Part #	QTY	LIST	Part #	QTY	LIST
Stud Size 22-18AWG						
#6				1723CS	100	$27.00
#8	1704CS	100	$27.00	1724CS	100	$26.90
#10	1705CS	100	$26.90	1725CS	100	$27.00
Stud Size 16-14AWG						
#6	1803CS	100	$24.90	1823CS	100	$27.20
#8	1804CS	100	$25.00	1824CS	100	$27.20
#10	1805CS	100	$24.60	1825CS	100	$27.20
1/4"	1806CP	100	$32.00			
Stud Size 12-10AWG						
#6	1903-15	50	$24.30	1923-15	50	$36.20
#8	1904-15	50	$27.80	1925CP	100	$32.50
#10	1905CP	100	$39.20			
1/4"	1906-15	50	$35.30			



Male Quick Connect

Female Quick Connect

Width	Part #	QTY	LIST	Part #	QTY	LIST
Stud Size 22-18AWG						
.110	1750CS	100	$60.90	1749CS	100	$27.90
.250	1756CS	100	$27.00	1755CS	100	$27.40
Stud Size 16-14AWG						
.187	1852CS	100	$39.50	1851CS	100	$26.40
				1853CS	100	$39.80
.250	1856CS	100	$25.90	1855CS	100	$26.00
Stud Size 12-10AWG						
.250	1956CP	100	$54.80	1955CP-PIC	100	$22.80

Closed End

PART #	QTY	LIST
16-14AWG		
1266CS-PIC	100	$21.60
12-10AWG		
1366-15-PIC	50	$21.70



Butt Connectors

PART #	QTY	LIST
22-18AWG		
1700CS-PIC	100	$24.40
16-14AWG		
1800CP-PIC	100	$24.50
12-10AWG		
1900CP-PIC	100	$37.80



Bullet & Receptacles Connectors

DIA	PART #	QTY	LIST
16-14AWG			
.157	1268-15	50	$27.40
.157	1858-15	50	$20.90



Piggyback Disconnects

PART #	QTY	LIST
22-18 Gauge		
1760-15	50	$16.30



Receptacles & Adapters



PART #	QTY	LIST
Volkswagon adapter brass double male tabs with single female receptacle .250 (50pc)		
1591-15	50	$29.40
Brass double male tabs with single female receptacle .250 (100pc)		
1595CS	100	$100.40
8GA. .250 side adapter (50pc)		
2567-15	50	$48.70
Volkswagon adapter brass double male tabs with single female receptacle .250 converts 1 male tab to 2 male tabs (5pc)		
1594-BP	5	-
Volkswagon adapter brass open-end piggyback slip-on with .250 male tab & female receptacle		
1597CS	100	$85.30

ELECTRICAL CONNECTORS

Grommets



Part#	A	B	QTY	LIST
6115PK	1/8	1/4	25	$9.60
6116PK	3/16	5/16	25	$11.80
6117-14	1/4	3/8	25	$12.80
6118-14	5/16	7/16	25	$13.70
6119-14	3/8	1/2	25	$13.70
6120-14	1/2	5/8	25	$23.40
6121-14	25/64	21/32	25	$34.20
6122-14	5/8	7/8	25	$37.40
6123-14	11/16	1	25	$18.50
6124-14	3/4	1-1/16	25	$22.10
6127-34	1	1-3/8	25	

Terminal & Tools Kit



Part #	Includes	LIST
31502-91	195 pc Vinyl Terminals 22-18GA to 12-10GA with 465T-E Crimp Tool	$127.30

Terminal Kit



Part #	Includes	LIST
31803-91	435 pc Vinyl Connectors & Terminals 22-18GA to 12-10GA	$181.00

O-Ring Kit



Part #	Includes	LIST
150	Assort O-Ring 407 pc. Plastic Case. 32 sizes.	-

ZipTape Wire Marker Dispenser





Part #	Descriptions	LIST
7086E	Pre-cut wire markers never have to be torn off. Pull down on the liner and lift off the marker. Compact in size and easy to reload with refill marker rolls. Legend 0 through 9. Size: 0.25" x 1.25"	$231.00
44-102	Wire Marker Book	$48.60

Zebra Gators

ZG002



ZG003



ZG004



Part #	Descriptions	LIST
ZG-002	The SMALL set includes 10 jumpers and is often used for low-voltage control/ manipulation.	$112.20
ZG-003	The MEDIUM set has 8 jumpers and can be used for motors and medium loads, inductive and resistive.	$140.70
ZG-004	The LARGE set has 4 heavy-duty jumpers with heavy-jawed clamps that can carry power to heavier loads, like heat strips and compressors.	$112.80

Magnetic Jumper 20" Leads

A powerful low-voltage magnetic jumper, the device eliminates popping-off the terminals. It is made specifically for recessed terminals in thermostats, controls boards, senors, switches, alarm panels, etc. It has a 30 vac/vdc, 5-A maximum.



PART #	LIST
MAG1YL	$34.00

Test Leads

All weather test leads - 36" length



PART #	LIST
FTL3 / TL360W-ALL	$91.70

ELECTRICAL CONNECTORS

Wire-Nut Wire Connectors



- Shell rated for 105ºC
- Fire-retardant polypropelene shell

Part #	Colour	Wire Combination Range (Inches)	Quantity	LIST
30-071	Gray	300V #22 to #16 AWG Min.2 #22 Max. 2 #16	Box of 100	-
30-072	Blue	300V #22 to #14 AWG Min.2 #22 Max. 3 #16	Box of 100	-
30-073	Orange	600V #22 to #14 AWG w/1 #20 Min.1 #18 w/1 #20 Max. 4 #16 w/1 #20	Box of 100	$102.50
30-073J	Orange		Jar of 300	$102.50
30-074	Yellow	600V #18 to #12 AWG Min.2 #18 Max. 4 #14 w/1 #18	Box of 100	$76.40
30-074J	Yellow		Jar of 175	$76.40
30-076	Red	600V #18 to #10 AWG Min.2 #14 Max. 4 #14 w/1 #18	Box of 100	-
30-176J	Red		Jar of 150	$110.30

High Temperature Wire-Nut Connectors



- Thermoplastic shell rated for 150ºC
- Fire-retardant shell
- Shell Colour Black

Part #	Wire Combination Range (Inches)	Quantity	LIST
30-3627	300V #22 to #16 AWG Min.2 #22 Str Max. 2 #16	Box of 100	$29.60
30-3628	300V #22 to #14 AWG Min.2 #22 Max. 3 #16	Box of 100	$33.60
30-3629	600V #22 to #14 AWG Min.1 #18 w/1 #20 Max. 4 #16 w/1#20	Box of 100	$38.50
30-059	600V #22 to #12 AWG Min.2 #20 Max. 3 #14	Box of 100	$66.30

Canadian Wire Connector Kit

- Convenient and durable carrying case
- A variety of connectors to fit a large range of wire sizes No. 6 AWG - 26 AWG

PART #	LIST
30-2088	$207.40



Can-Twist Wire Connectors



- Exceptional wire range capacity
- Hexagonal shape allows connectors to be applied with standard nutdriver
- Shell rated for 105ºC

Part #	Colour	Wire Combination Range (Inches)	Quantity	LIST
30-107J	Blue	600V #22 thru #8 AWG Min.3 #22 Max. 3 #10	Jar of 175	$49.70
30-207	Blue	One size fits all	100	$38.50

WeatherProof® Wire Connectors

Part #	Colour	Wire Combination Range (Inches)	Quantity	LIST
30-1161	Blue	Weather Proof Min.2 #20 Max. 2 #14	25	$84.60
30-1162	Blue	Weather Proof Min.2 #18 Max. 3 #10	20	$82.90
30-1163	Blue	Weather Proof Min.3 #14 Max. 3 #10	20	$82.90

ELECTRICAL CONNECTORS, CORDS AND TROUBLE LAMPS

WAGO 221 Series LEVER-NUTS® Conductor Wire Nuts

- Connect any combination of solid, stranded and flexible copper wires faster and more reliably
- Minimize space consumption in the junction box – by 40% compared to 222 Series
- Visually inspect for proper strip length and complete wire insertion through its transparent housing
- Operate comfortably and with lower operating forces by using familiar orange levers



221-412
2-conductor connector

Part #	Description	LIST
221-412	2 conductor Wire Nut 100PK	$84.40
221-413	3 conductor Wire Nut 50PK	$52.90
221-415	5 conductor Wire Nut 25PK	$42.30



221-413
3-conductor connector



221-415
5-conductor connector

Trouble Lamps



Incandescent

Part #	Description	Wire GA/COND	Wire Type	Cord Length	LIST
05857-SWC	work lamp outlet handle	16/3	SJED	10 m/25 ft	$68.00



Fluorescent

Part #	Description	Wire GA/COND	Cord Length	Watts	LIST
L1921	work lamp	16/3	25 ft	26	$119.00

Polarsolar Extension Cords



MEDIUM DUTY

Part #	Description	LIST
01287	25 ft., single outlet lighted, 16 gauge wire	-

HEAVY DUTY

Part #	Description	LIST
01488	50 ft., single outlet lighted, 14 gauge wire	-

CONTRACTOR DUTY

Part #	Description	LIST
01688	50 ft., single outlet lighted, 12 gauge wire	-
01689	100 ft., single outlet lighted, 12 gauge wire	
25890002	100 ft., single outlet lighted, 12 gauge wire	$270.80

FUSES
BUSS

Type ABC Ceramic Body
- Ceramic / 250 Volt
- Time-lag
- 1/4" x 1-1/4"



Type AGC Glass Body
- Fast-acting glass / 250 Volt
- 1/4" x 1-1/4"



Type FNM Time Delay Midget
- 250/125/32 volt
- Dual-element / time delay
- 13/32" x 1-1/2"



Type FNQ Time Delay Midget
- 500 volt
- Time-delay
- 1/4" x 1-1/4"



Type AGX Glass Body
- 250 volt
- Non-time delay
- 1/4" x 1" fuse



Type ATC Flat Blade
- 32 volt
- Non-time delay



Type BBS Non-Time Delay
- 600 volt
- Non-time delay
- 13/32" x 1-3/8"



Type C Glass Body
- Glass body / 250 volt



Type FNQ-R UL Class CC
- 600 volt / time delay



Type FRN-R UL Class RK5
- 250 volt
- Dual element / time delay



Type FRS-R UL Class RK5
- 600 volt
- Dual element / time delay



Type GDA Fast Acting Ceramic
- 250 volt
- Fast-acting

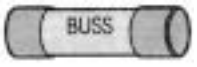

Type GLQ Glass Body
- 300 volt
- Non-time delay
- Integral one piece fuse & installation knob



Bolt-in Mounting for 1/4" x 1-1/4" Fuses
- Voltage rating: 300 volt

S-8201-1 Single pole 1/4" quick connect UL20A CSA 16A
S-8201-3 Three pole 1/4" quick connect UL20A CSA 16A

FUSES

BUSS

Type GMA Fast Acting Glass Body
- 125 volt
- 5mm x 20mm



Type GLR Glass Body
- 300 volt
- Non-time delay
- Integral one piece fuse & installation knob



Type GMQ Dual Element
- 300 volt
- Dual element / time delay
- Integral one piece fuse & installation knob



Type KTK Fast Acting Midget
- 600 volt
- Non-time delay
- 13/32" x 1-1/2"



Type KTK-R UL Class CC Midget
- 600 volt
- Non-time delay
- 13/32" x 1-1/2"



Type MDL Time Delay
- 250 / 32 volt
- Time delay
- 1/4" x 1-1/4"



Type NON General Purpose
- 250 volt
- One time

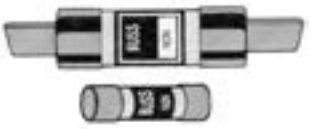

Type NOS General Purpose
- 600 volt
- One time
- Non-current limiting



Type REN UL Class H Renewable
- 250 volt
- Time-lag

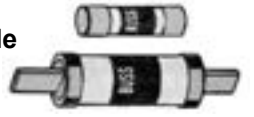

Type SC UL Class G
- 300 volt
- Time-lag



Type S Dual Element Plug
- 125 volt
- Time delay / dual element



Type T Dual Element Plug
- 125 volt
- Time delay/dual element



Fuse Pullers

FP-A3 for 1/4" & ATC fuses
FP-2 for 13/32" to 13/16" fuses
FP-3 for 1" to 1-3/4" fuses
FP-4 for 1-3/4" to 2-1/2" fuses

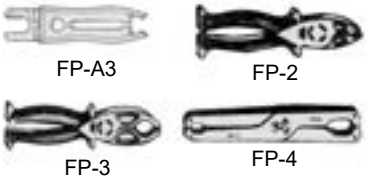

Fuse Holders

HHB 1/4" in-line fuseholder
HRK 1/4" in-line fuseholder w/leads



CABLE TIES

Wire Ties

Part #	Length (in)	Colour	Qty/Pack	Tensile Strength	LIST
CT4-18C9	4.0	Natural	100	18 lb	
CT6-40C0W	6.0	UV Black	100	40 lb	
CT8-50C9	8.0	Natural	100	50 lb	
CT8-50C0W	8.0	UV Black	100	50 lb	
CT11-50C9	11.0	Natural	100	50 lb	
CT11-50C0W	11.0	UV Black	100	50 lb	
CT14-50C9	14.5	Natural	100	50 lb	
CT14-50C0W	14.5	UV Black	100	50 lb	
7070-PK	28.0	White	25	120 lb	$64.40
6263BCX-ALL	11.0	Black	100		

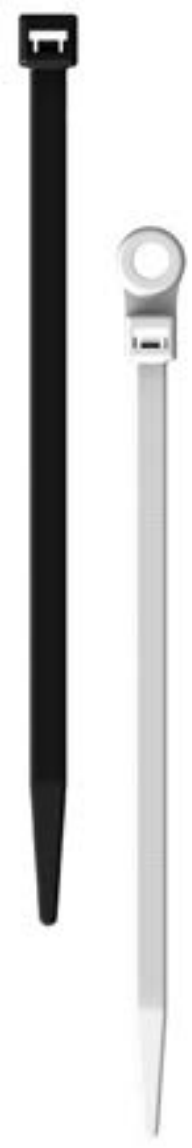

Screw Mount Cable Ties

Part #	Length (in)	Colour	Qty/Pack	LIST
CTM6-40C9	6.0	Natural	100	
CTM6-40C0W	6.0	UV Black	100	
CTM8-50C9	8.0	Natural	100	
CTM8-50C0W	8.0	UV Black	100	
CTM11-50C9	11.0	Natural	100	
CTM11-50C0W	11.0	UV Black	100	
CTM14-50C9	14.5	Natural	100	
CTM14-50C0W	14.5	UV Black	100	

Cold Weather Cable Ties -40°F Rated

Part #	Descriptions	LIST
7295-34	Cable Ties 7.5" 25PK	$9.40



CABLE TIES

Natural Nylon Cable Clamps

Part #	Nom. Clamp Dia. (in)	Closed Dia. (in)	LIST
7118HN-C	.125	.115	$30.20
7119HN-C	.187	.172	$30.60
7120HN-C	.250	.234	$29.30
7121HN-C	.312	.297	$30.00
7122HN-C	.375	.359	$30.80
7124HN-C	.500	.484	$33.80
7126HN-C	.625	.609	$45.90
7128HN-C	.750	.734	$56.60
7130HN-C	1.00	.984	$77.20

Vinyl & Rubber Insulated Clamps

Part #	I.D.	PC	LIST
7314-PK	1/4"	20	$25.80
7315-PK	3/8"	20	$27.80
7316-PK	1/2"	20	$28.60
7317-PK	5/8"	20	$41.20
7318-PK	3/4"	20	$45.00
7319-PK	7/8"	17	$43.60
7321-PK	1-1/8"	10	$29.40

Manual Cable Tie Tension & Cutting Tool

Manual Twist Cut



Part #	Descriptions	LIST
801-31	Plastic, use with 18-50 lb Cable Ties	$81.10

Cable Tie Removal Tool

Safety guards slide behind the strap to prevent the sharp blades from contacting the bundled items.



Part #	Descriptions	LIST
802-11	Cable Tie Removal Tool	$175.20

Automatic Cable Tie Tension & Cutting Tool

Automatic Cut



Part #	Descriptions	LIST
803-31	Metal, use with 18-50 lb Cable Ties	$164.00

Manual Cable Tie Tension & Cutting Tool

Manual Twist Cut



Part #	Descriptions	LIST
804-31	Metal, use with 120-175 lb Cable Ties	$161.20

REFRIGERATION HARDWARE

KASON

Edgemount Hinges

214

Adjustable hinge, seats close to the refrigerator door, requires a minimum jamb-width, for right or left-hand doors
Offsets: 7/8", 1-1/8", 1-3/8"



Part #	LIST
214-7/8	$179.30 ea
214-1-1/8	$180.60 ea
214-1-3/8	$196.60 ea

1216

Contemporary styled non-rise adjustable hinge ideally suited for underbar equipment and standard reach-in refrigerators.
Offsets: 1-1/8"

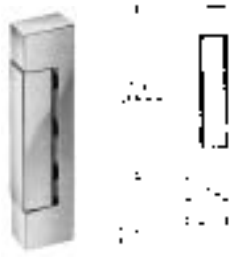

Part #	LIST
1216-1-1/8	$83.00

217

Adjustable hinge for right or left-hand door. Offsets can be easily adjusted to compensate for gasket compression. Offsets: 7/8", 1-1/8", 1-3/8"



Part #	LIST
217-7/8	$190.60 ea
217-1-1/8	$193.50 ea
217-1-3/8	$200.60 ea

Edgemount Cam-Lift Hinges

1267

Self-closing, cam-lift hinge for right or left-hand doors. A self-lubricating Zytel cam design causes door to close automatically or stay open at 93° angle whe desired.
Offsets: 1-5/8" to 2-3/8"



Part #	LIST
1267	$112.80ea

Power Spring Conversion Kits

Converts the non-rise hinge into a self-closing hinge.

Part #	LIST
R42-2800	$26.20 ea

REFRIGERATION HARDWARE

KASON

Cam-Lift Hinges

1398

Dwell stop keeps door in open position beyond 90° opening. Fully reversible for right or left-hand doors

Offsets: 2-1/2" to 3-1/2"

Part #	LIST
1398-2-1/2	$694.00
1398-3-1/2	$526.00



Surface Mount Hinges

139

Narrow flange hinge for small service doors.

Offsets: Flush, 1/4", 3/8", 5/8", 3/4", 7/8", 1", 1-1/8"

Part #	LIST
139-1-1/8	$511.00 ea





1070

Narrow flange hinge.

Offsets: Die-cast: Flush, 1/8", 1/4", 3/8", 5/8", 3/4", 7/8", 1", 1-1/8"

Part #	LIST
1070-7/8	$229.20
1070-1-1/8	$229.20 ea



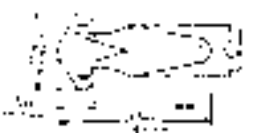

1071

Narrow flange hinge; enlarged version of 1070. Offsets: Die-cast: 7/8", 1-1/8"

Part #	LIST
1071-7/8	$220.40 ea
1071-1-1/8	$416.00 ea

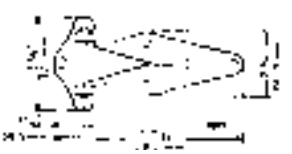

REFRIGERATION HARDWARE
KASON

Pivot Hinges

Designed for reach-in and pass-through doors. When ordering, specify R (right) or L (left).

1522L - left
1522R - right
Top hinge. Self-closing spring assembly. Use with all bottom hinges or intermediate for two doors.



Part #	LIST
1522L	$203.00 ea
1522R	$203.00 ea

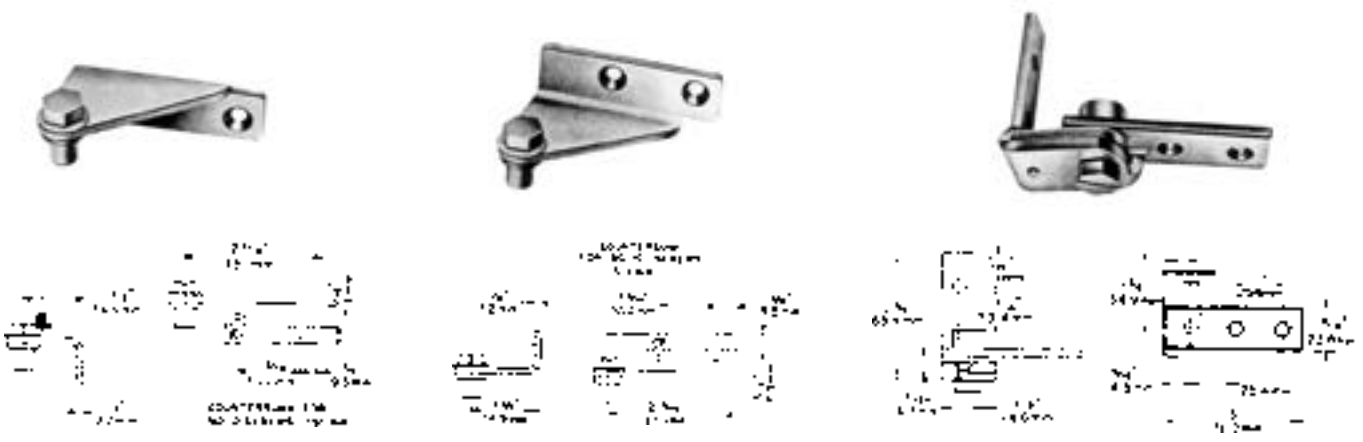

1510 (pictured)
Mounts upper left or lower right

1511
Mounts upper right or lower left

Part #	LIST
1510	$97.80 ea
1511	$98.70 ea

1530 (pictured)
Mounts upper left or lower right

1531
Mounts upper right or lower left

Part #	LIST
1530	$96.80 ea
1531	$98.40 ea

1521L - left
1521R - right
Bottom hinge, features dwell stop.

Part #	LIST
1521L	$206.10 ea
1521R	$206.10 ea

REFRIGERATION HARDWARE

KASON

Reversible Cam-Lift Hinges

1245
Surface mounted, cam-lift hinge.
Offsets: Flush, 1/8", 1/4", 1-1/8", 1-1/4", 1-3/8", 1-1/2", 1-5/8", 1-3/4", 1-7/8", 2".



Part #	LIST
1245-FLUSH-KAS	$338.00
1245-1-1/8-KAS	$343.00
1245-1-1/4-BC-KAS	$343.00
1245-1-3/8-KAS	$295.80
1245-1-1/2-KAS	$348.00
1245-1-5/8-KAS	$358.00
1245-1-3/4-KAS	$361.00
1245-1-7/8-KAS	$362.00
1245-2-KAS	$363.00

1248
Spring assisted, surface mounted, cam-lift hinge.
Offsets: Flush, 1/8", 1/4", 1-1/8", 1-1/4", 1-3/8", 1-1/2", 1-5/8", 1-3/4", 1-7/8", 2".

Part #	LIST
1248-FLUSH-CHR	$367.00
1248-1-1/4	$402.00
1248-1-3/8	$403.00
1248-1-1/2-CHR	$390.00
1248-1-5/8-CHR	$388.00
1248-1-3/4-CHR	$389.00



Intermediate & Heavy Duty Hinges



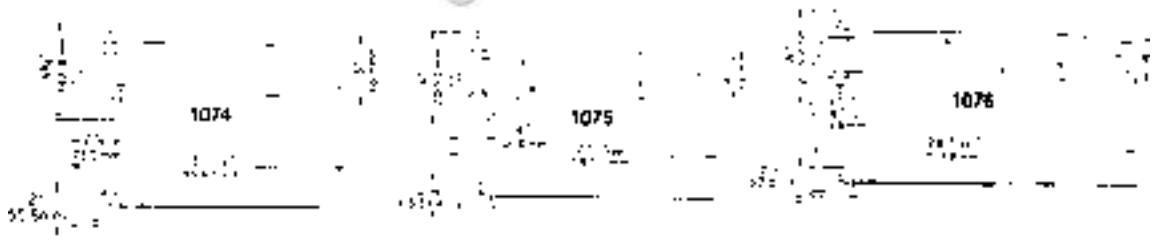

1074
Intermediate hinge
Offsets: Flush, 1-1/8"

Part #	LIST
1074-FLUSH-KAS	$394.00
1074-1-1/8-KAS	$394.00

1075
Intermediate hinge
Offsets: Flush, 1-1/8", 1-1/4", 1-3/8"

Part #	LIST
1075-FLUSH-KAS	$589.00
1075-1-1/8-KAS	$564.00
1075-1-1/4-KAS	$540.00
1075-1-3/8-KAS	$564.00

1076
Heavy-duty hinge
Offsets: 1-1/8", 1-1/4", 1-3/8"

Part #	LIST
1076-1-1/8-KAS	$827.00
1076-1-1/4-KAS	$834.00
1076-1-3/8-KAS	$831.00

Reversible Cam-Rise Hinges



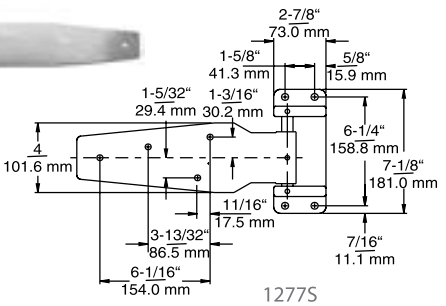

1277
Heavy-duty hinge
Strap Length: 21"

Part #	LIST
1277-FLUSH	$571.00
1277-1-1/4	$564.00
1277-1-3/8	$567.00

1277L
Heavy-duty hinge
Strap Length: 26"

Part #	LIST
1277L-1-1/8	$606.00
1277L-1-1/4	$556.00
1277L-1-3/8	$560.00

REFRIGERATION HARDWARE

Surface Mount Latches

930 Series
Trigger-action latch for use with right or left-hand doors.



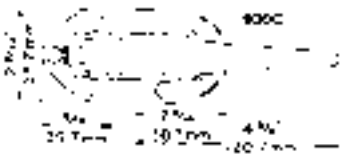

Part #	Description	LIST
930C-L-S	Latch with adjustable micrometer strike	$576.00
930D-L-S	Latch with micro-turn strike for adjustments	$580.00



Edgemount Mechanical Latches

173C
Two-way adjustable latch with universal strike, edge-mounted body and surface mounted strike, for right or left-hand doors, used with all standard gaskets.
Cylinder-locking, straight handle.

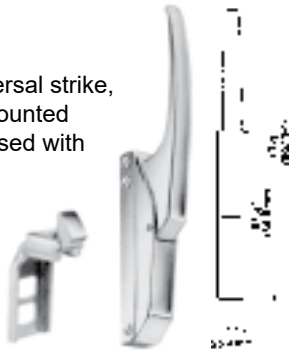

Part #	LIST
173C-L-S	

531C
Trigger action latch with two-way adjustable strike mounts flush with surface of door; eliminates all hazards of protruding hardware. Powerful action provides positive airtight closure.



Part #	LIST
531C-L-S	$1,023.00

533D
Powerful, smooth acting with padlock provision and patented MICROturn two-way adjustable strike.



Part #	LIST
533D-L-S	$271.80

538C
Powerful, smooth acting with padlock provision and patented MICROturn two-way adjustable strike. Cylinder-locking



Part #	LIST
538C-L-S	$366.00

Door Closers

1092



Part #	Description	LIST
1092-FLUSH	Closer w/Flush Hook	$406.00
1092-1-1/8	Closer w/1-1/8" Offset Hook	$461.00

1095

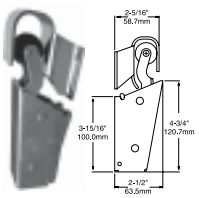

Part #	Description	LIST
1095*	Use 1094H Hook	$283.50

**Less Hook*

1094

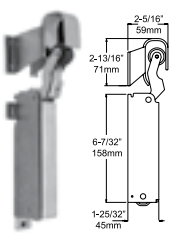

Part #	Description	LIST
1094000013*	Closer, Concealed Mounting	$309.00
1094H-F	Hook for 1094 Flush	$52.00
1094H-1-1/8	Hook for 1094 1-1/8" Offset	$52.00

**Less Hook*

Foot Treadle



Part #	Description	LIST
W50-1000	Hands-Free Door Operation, reversible for right or left hand door swing	$138.50

REFRIGERATION HARDWARE

KASON

Intermediate & Heavy Duty Latches

K52

Bolt action, walk-in cooler latch, designed for medium sized doors.
Offsets: Adjustable from 1/8" below to 5/16" above flush, 3/4" to 1-3/8".
(For inside release handle, see #481B)

Part #	LIST
K52-L-S	$1,092.00



K53

Bolt action latch designed for large walk-in doors.
Offsets: Adjustable 1/4" below to 1/8" above flush, 15/16" to 1-5/8". (For inside release handle, see #481B)

Part #	LIST
K53-L-S	$1,795.00

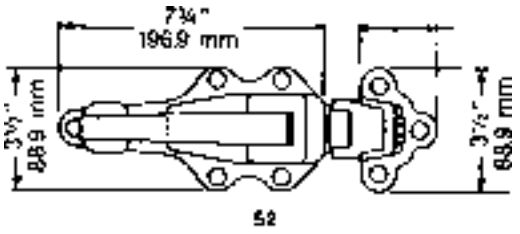

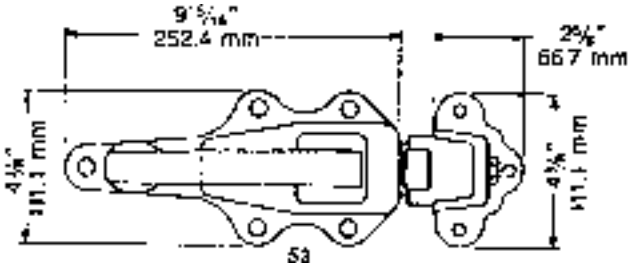

Edgemount Magnetic Latches

170 Offset Latch

High tech glass reinforced composite handle offers strength and low heat conduction.

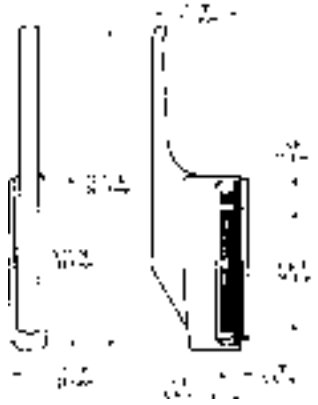

Part #	LIST
170S-L	$612.00

171C

A powerful magnetic force assures positive, air-tight closure of refrigerator and freezer doors. With tamper proof cylinder lock.

Part #	LIST
171C-L-S	$360.00



172C

A combination of powerful magnetic force plus a mechanical locking design assures the ultimate in positive locking and sealing and permits easy latch release with finger tip pressure. Cylinder-locking, straight handle.

Part #	LIST
172C-L-S	$353.00

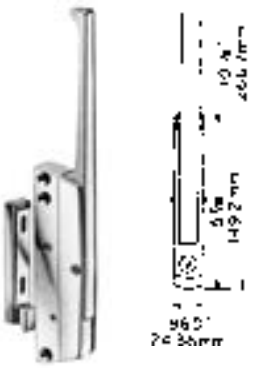

REFRIGERATION HARDWARE

KASON

Safeguard Latches

K55

Mechanically designed to provide easy action for opening and closing doors. Latch releases from inside or outside with minimum pressure or pull.
Offsets: Adjustable from flush to 3/16",
3/4" to 1-1/8", 1-1/8" to 1-5/8", 1-3/8" to 1-7/8".

Part #	LIST
K55-L-S	$2,367.00

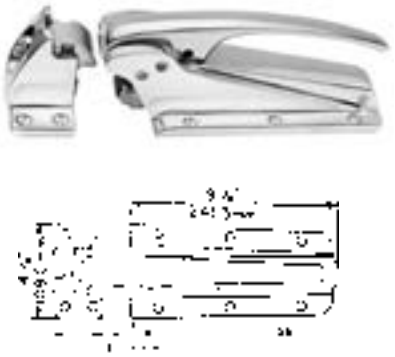

K56

Safeguard latch offers the ultimate in protection against accidental entrapment and provides your employees with an extra margin of safety.
Light, 27lb spring pressure.
(for inside release handle, see #481A)

Part #	LIST
K56L-L	$515.00
K56-S-FLUSH	$275.20
K56-S-3/4	$276.00
K56-S-1-3/4	$285.50

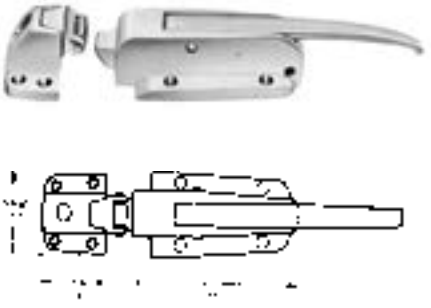

K58

Safeguard latch with radial tongue that rolls into closed position.
Offsets: Adjustable from 1/8" below flush to 1/4" above flush, 3/4" to 1-1/2" above flush, 1-3/4" to 2-1/2" above flush.
(for inside release handle, see #481C)

Part #	LIST
K58L-L-KAS	$322.00
K59-S-FLUSH-CHR-KAS	$135.40
K59-S-3/4-KAS	$108.20
K59-S-1-3/4-KAS	$127.70

K59

Roller strike assembly
(only for K58)

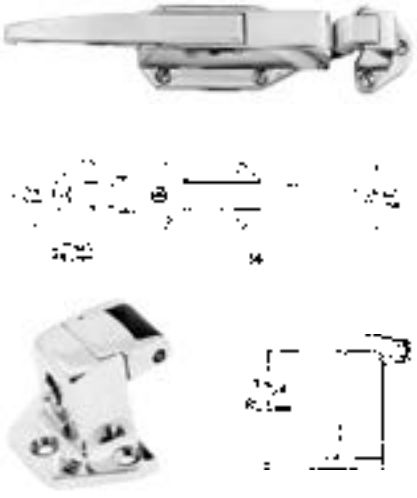

REFRIGERATION HARDWARE

Inside Release Door Handles

481A, B, C

Inside release handle. Steel rod & flange, safety-glow plastic knob
Use with latch #:
481A - #56 481B - #52 & 53 481C - #58

PART #	LIST
481A-KAS	$48.10
481B-KAS	$65.60
481C-KAS	$45.40



489A

Recessed inside release handle. Plastic recessed housing, steel rod and flange, safety-glow plastic knob.
Use with latch #:
489A - #56 & #58

Part #	LIST
489A	$110.40



Vapor Proof Lights

Vapor proof light fixtures are fully gasketed and enclosed to reduce the effects of temperature extremes.



Part #	Description	LIST
L1706	Southwire - With glass globe and wire guard	$163.40

Part #	Description	LIST
6416-1010-6401	Kason - Replacement glass lens	-
L10-X008	Kason - Polycarbonate lens	$41.10
6492-1014-6213	Kason - Replacement wire guard	$24.60

Heated Ventilator Ports

W88

Heated vents prevent freeze-ups and reduce cooler condensation. Two-way valve unit allows air flow in dual directions, compensates for expansion and contraction during refrigeration cycles.

Part #	Description	LIST
W88-1010	4" - 115V	$249.50
W88-1010-6000	6" - 115V	$249.50
W88-2010-4	non-heated	$107.50



DOOR CURTAIN

KASON Vinyl Strip Curtains

- Quick, easy mounting and strip replacement.
- Wall mounted system for a wide range of applications.
- Join together for wider door size.

Part #	Door Width	LIST
402LA6063884	38" x 84"	$355.00
402SD8084490	44" x 90"	$543.00

Roll Stock

USDA material is made of compounds that meet federal requirements for incidental contact with meat, poultry, and dairy products. This product is recommended for indoor and outdoor applications, in temperatures ranging from –40°F to 140°F.

Part #	Alt #	Strip Width	Strip Thickness	Feet per Roll	LIST
401LSM606400	606	6"	.06	300	-
401SM8080300	808	8"	.08	300	-
402SM6060100	902SM6060100	6"	.06	100	-
402SM8080100	902SM8080300	8"	.08	100	-



GASKETS FOR COMMERCIAL REFRIGERATION

Foamedge Gaskets

Soft flexible polyurethane foam core covered with a thin vinyl sheeting
Applications: insulating, sound proofing, shock absorber, light seal, dirt seal

- Use Foamedge on partitions, swinging doors, sliding doors, exhaust fans, light fixtures, hoods, covers
- Foamedge is a soft, flexible polyurethane foam core, clad in a resilient vinyl cover
- Versatile, effective insulation - soundproofing sealer
- Installs easily with tacker or screws
- Available in 25 ft. or 100 ft. rolls

Foamedge - Temperature Range +20° to +250°F

Part #	Cushion Diameter	Flange Width	LIST
3705-10	3/8"	1/2"	$7.60
V1212	1/2"	1/2"	$14.90
V5858	5/8"	5/8"	$18.40
7507-10	3/4"	3/4"	$8.70



SEALING STRIPS

Closed Cell Sealing Strips

For heavy duty sealing of cold storage and other commercial refrigerator door applications.

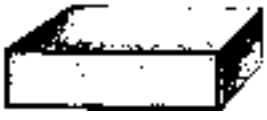

Part #	Thickness	Width	LIST
3810	3/8"	1"	$17.50 (ft)

Door Sill Gaskets

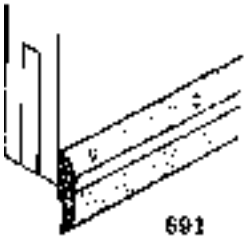

Part #	Strip Width	Material	LIST
691	1-1/2"	vinyl	$29.80 (ft)

SEALING STRIPS

Closed Cell Foam Tape

Part #	Description	LIST
CCNEOPSA 1/4x3/8 x 25	1/4" x 3/8" x 9.8'	$44.30
CCNEOPSA-1/4X3/4X25-SUR	1/4" x 3/4" x 25'	
CCNEOPSA1/2X1X20-SUR	1/2" x 1" x 20'	
CCNEOPSA1/2X1-1/2X20-SUR	1/2" x 1-1/2" x 20'	$86.60
CCNEOPSA5/16X1/2X25-SUR	5/16" x 1/2" x 25'	$58.70
CCNEOPSA5/16X3/4X25-SUR	5/16" x 3/4" x 25'	$70.30
CCNEOPSA-3/4X3/4-SURx12.5	3/4" x 3/4" x 12.5'	-
CCNEOPSA1X2X12.5-SUR	1 x 2 x 12.5'	$113.60



Loctite Super Weatherstrip Adhesive

Fast drying, strong, waterproof weatherstrip adhesive.

Part #	Description	LIST
30537	yellow	$38.20



DOOR GASKETS - MADE TO ORDER

Order Information

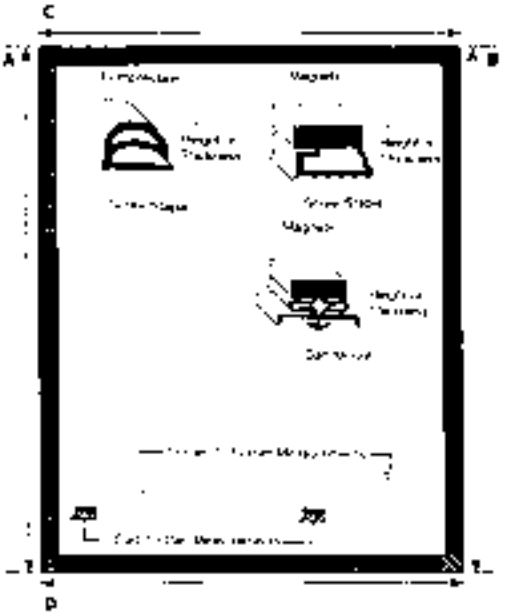

Magents on sides: ☐ A ☐ B ☐ C ☐ D ☐ All ☐ None

Note: Please ensure your measurements are correct. The finished product is determined by the dimensions you supply.

When ordering dart type, you must specify dimensions centre to centre of the dart. See illustration below. If dimensions on the dart type gasket has been measured corner to corner please specify.

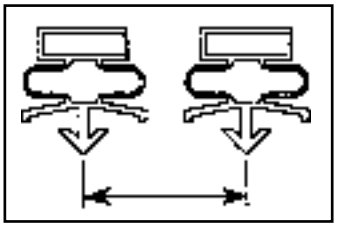

Sure Seal	Exact	Description
RKG-LSP	–	dart fits 1/8" channel - used on Foster, Vollrath, MKE
RKG-BCD	–	dart fits 1/8" channel for 1/2" offset - used on Coldstream
RKG-COM	–	compression type gasket
RKG-DLP	P10433	flange style for universal application
RKG-BCF	–	flange style, black for 1/2" offset. Used on Coldstream
RKG-WW	P2099	domestic applications, all major brands & some commercial applications
RKG-UFG (A)(B)(C)(D)	P2319	universal flange style. one profile is used to create 4 different profile depending on flange requirements. Bel Par, Coldstream, Continental, Delfield, Randell, Stay Cold

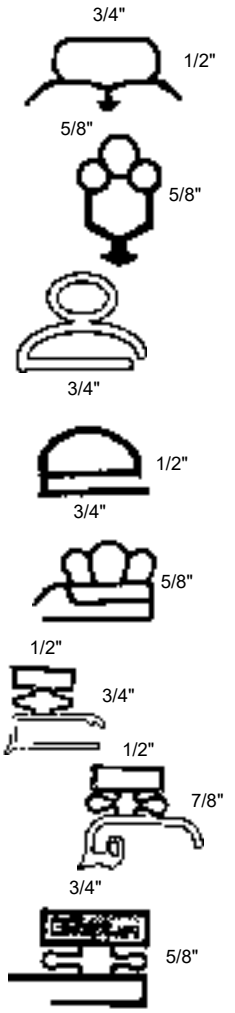

DOOR GASKETS - MADE TO ORDER

Order Information on previous page

Sure Seal	Exact	Description
RKG-GFM	P2319	used mainly in the food service industry and is common to quest metal products
RKG-CLK		Grey, Compression Gasket used on Coldmatic doors
RKG-LP	P10698	low profile gasket used extensively in back bar applications, Grey
RKG-MD		similar to gaskets commonly found on Coldstream, Cornelius, Raetone, Traulsen, True, reach-in coolers & freezers fits 1/8" channel
RKG-NK	P2778	used on a variety of equipment including Beverage Air, Migoli, Universal-Nolan, Nova Kool, etc.
RKG-SKG	AVAIL.	used primarily on Silver King - Norris equipment - fits 3/16" channel
RKG-FTR	P3265	used primarily on Foster, Coldmatic fits 1/4" channel
RKG-GMD	–	used on Beverage Air, Elliott-Williams, Foster, Perlick and Utility
RKG-CRP	P2209	fits 1/8" channel - used on Beverage Air, Diamond, Duke, Jordan, Kelvinator, Met Tec, McCall, Raetone, Star Metal, Superior, True
RKG-BLY	AVAIL.	fits 1/8" channel used on Bally coolers & freezers
RKG-CLM	P3201	fits 5/16" channel used on Traulsen reach in coolers & freezers
RKG-TRU	8108A	fits 1/8" channel used on True reach in coolers & freezers
RKG-ANT	P2553	fits 1/8" channel - used on Anthony, Coldstream, Glenn Air, Hussman, Leer, Randell glass doors
RKG-PHP	–	Universal Door Sweep

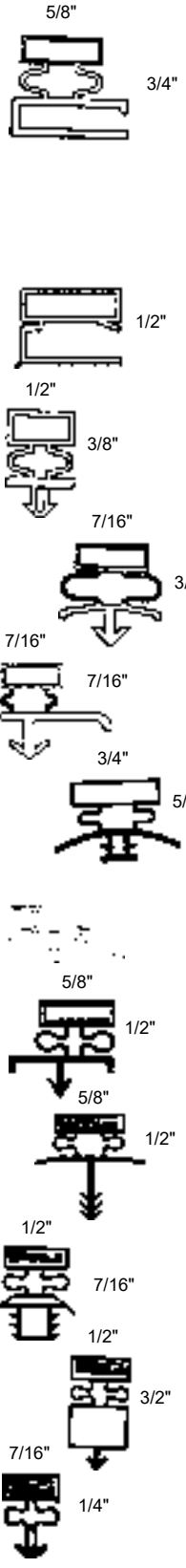

CONDENSATE PANS

Commercial Refrigeration Condensate Evaporator Pans



Features/Benefits

- Corrosion resistant stainless steel construction.
- Made from top quality materials and components for longer more durable use.
- Positive evaporation
- Space saving
- High limit safety and float switch operation

Part #	Capacity QT	Watts	Volts	Dimensions L x W x H	Dissipation Rate Per Day	LIST
CP801-SUP	1-3/4	400	120	10 x 7 x 2-1/2	3 Gallon	$396.00
CP802-SUP	2-1/2	800	120	13 x 7 x 2-1/2	6 Gallon	$467.00
CP802-240-SUP	2-1/2	800	240	13 x 7 x 2-1/2	6 Gallon	$467.00
CP804-SUP	4-1/2	1000	120	13 x 7 x 4	10 Gallon	$448.00
CP804-240	4-1/2	1000	240	13 x 7 x 4	10 Gallon	$458.00
CP804HD-SUP	7-1/2	1000	120	13 x 10 x 4	6 Gallon	$495.00
CP804HD-SUP-240	7-1/2	1000	240	13 x 10 x 4	6 Gallon	$538.00
CP807-SUP	7-1/2	1000	120	13 x 10 x 4	10 Gallon	$472.00
CP807-240-SUP	7-1/2	1000	240	13 x 10 x 4	10 Gallon	$505.00
CP815-SUP	15	1440	120	21 x 13 x 4	12 Gallon	$651.00
CP815-240-SUP	15	1500	240	21 x 13 x 4	12 Gallon	$651.00
CP816	7	500	120	13 x 10 x 4	4.5 Gallon	$481.00
CP817	7	1000	208	13 x 10 x 4	8 Gallon	$472.00
CP818	7	1000	208	13 x 10 x 4	8 Gallon	$472.00
CP819	7	1500	120	13 x 10 x 4	12 Gallon	$491.00
CP820	7	1500	208	13 x 10 x 4	12 Gallon	$495.00
CP821-SUP	15	1500	208	21 x 13 x 4	12 Gallon	$637.00

Condensate Pan



Part #	Cap.	Volts	Watts	Evap. Rate	Size	LIST
660A	50 oz	117	190	6 oz / hr	12-1/4 x 4-3/4 x 3	$416.00
70CSA220	50 oz	220	190	6 oz / hr	12-1/4 x 4-3/4 x 3	$359.00

30-OS, 31 & 75 Condensate Pans

Standard cast aluminum condensate drains complete with long life heating element and mounting legs.

- Designed for continuous use.





Part #	Cap.	Volts	Watts	Evap. Rate	Size	LIST
30-0S	38 oz	120	160	8 oz / hr	10 x 4 x 2-7/8	$153.30
75	75 oz	120	320	14 oz / hr	10 x 9 x 2-3/4	$373.00
75-220	75 oz	220	320	14 oz / hr	10 x 9 x 2-3/4	$373.00

Universal Drain Heaters

Designed for use in heating drains.



Part #	Volts	Watts	LIST
SH250	120	3	$47.20

PIPE HEATING CABLE

"Self Regulating" Heating Tape

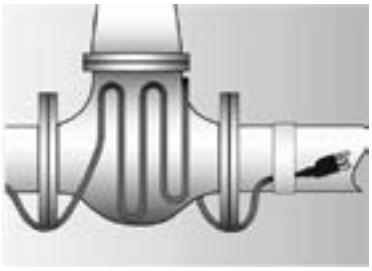

- Won't burn out
- Won't overheat
- OK to overlap
- OK to insulate
- OK for plastic
- No thermostat required
- Cut to desired length
- Higher efficiency

Protect Pipes
Keep Wet Areas from Freezing
With WinterGard Wet for tracing air conditioner drain pans to prevent freezing or gut tracing freezer drain lines to prevent backup problems

Thermawire (steel braided)

Part #	Watts/ft	Power	LIST
TW6-1C	6	120 V	$14.10/ft
TW6-2C	6	240 V	$14.80/ft

Thermawire (steel braided & outer jacket)

Part #	Watts/ft	Power	LIST
TW6-1CR-CHR	6	120 V	$17.00
TW6-2CR-CHR	6	240 V	$19.30

Installation Accessories

Part #	Watts/ft	LIST
FGK-P-RS	Termination Kit	$27.80
TW-GFI-CS	GFIC Connection Kit	$265.70



TW-GFI-CS

Non-Automatic Heat Tapes

Pipe heating cable eliminates freezing problems



Heat Tape

115 Volt

Part #	Description	LIST
HB-01	3.28' length, 23 watts	$85.90
HB-02	6.56' length, 46 watts	$91.20
HB-03	9.84' length, 69 watts	$98.60
HB-04	13.12' length, 92 watts	$106.40
HB-05	16.41' length, 115 watts	$114.30
HB-06	19.69' length, 138 watts	$119.30
HB-07	22.97' length, 161 watts	$126.90
HB-09	29.53' length, 207 watts	$137.10
HB-12	39.37' length, 275 watts	$189.50
HB-18	59.06' length, 414 watts	$269.70
HB-24	78.74' length, 551 watts	$352.00

240 Volt

Part #	Description	LIST
HB-02-2	6.56' length, 46 watts	$95.80
HB-04-2	13.12' length, 92 watts	$105.90
HB-06-2	19.69' length, 138 watts	$126.00
HB-08-2	26.25' length, 184 watts	$155.70
HB-10-2	32.81' length, 230 watts	$191.30
HB-12-2	39.37' length, 275 watts	$226.20
HB-14-2	45.93' length, 321 watts	$261.00

Pipe Freeze Protection Cable

Self Regulating at 5 watts/foot-120 volt with plug

Part #	Description	LIST
STW51-6	6' length	$199.20
STW51-12	12' length	$232.40
STW51-18	18' length	$306.00
STW51-24	24' length	$392.00
STW51-50	50' length	$644.00

HEATERS

Radiant Defrost Heaters



Part #	Length	Watts	Volts	LIST
SH261	21"	550	115	-
SH263	21-5/8"	625	115	-
SH265	10-11/16"	625	115	-
SH266	22-9/16"	525	115	-
SH267	22-7/8"	500	115	-
SH270	24-1/4"	550	115	-

Door Heaters

For commercial refrigeration application to prevent moisture and eliminate frost build-up on door and cabinet fronts.



Part #	Length	Watts/Ft.	Volts	LIST
SH281	36-1/2'	3	120	$84.90
SH282	18'	3	120	$59.00
SH283	36'	3	220	$75.50
SH284	18'	3	220	$63.70

Flexible Bend-to-Fit Defrost Heaters



For evaporator coils & condensate drain pans in commercial refrigeration. Bend and shape easily with hands at jobsite. Quickly replace almost any defrost heater. Measure length of original and order a similar length. Heaters constructed of .250 diameter incoloy. Heaters can be linked together to create additional length.

Part #	Watts	Volts	Sheath Length	Heated Length	LIST
2045	300	120	45"	31"	-
2068	450	120	68"	54"	-
2091	675	240	91"	77"	$275.10
2105	850	240	105"	91"	$320.00
2118	1000	240	118"	104"	$337.00
2150	1350	240	150"	136"	$372.00
2188	1250	240	188"	174"	$400.00
2216	1500	240	216"	202"	$460.00

Flexible Braided Aluminum Heaters



Designed for use in heating drain troughs, drain tubes and drain pans.

Part #	Length	Leads	Watts	Volts	LIST
SH201	18	23"	15	115	$47.20
SH202	29	23"	45	115	$55.50
SH203	44	23"	55	115	$61.30
SH205	56	23"	65	115	-
SH207	86	23"	110	115	$70.80

Aluminum Foil Heaters



Provided with pressure sensitive adhesive backing for easy installation.

Part #	Size L x W	Watts	Volts	LIST
SH222	24" x 1-1/4"	10	115	$30.70
SH223	14-1/2" x 5-1/2"	10	115	-
SH224	27-1/2" x 5-1/2"	65	115	$106.10
SH226	10-1/2" x 10-1/2"	40	115	$61.30

Flexible Drain Line Heaters



To prevent freezing in commercial refrigeration condensate drain lines and other applications. Aluminium braided heaters keep drains clear of ice. Waterproof silicone sleeve protects heater. The sleeve is stiff but easily flexible.

- Durable Metal Braid
- Silicone Construction
- Designed For Waterproof Low Wattage Heat

Part #	Length	Watts	Volts	Leads	LIST
SH500	9"	11	120	18"	$51.90
SH502	13"	15	120	18"	$66.00
SH503	13"	15	240	18"	$54.30
SH504	21"	25	120	18"	$66.00
SH505	21"	25	240	18"	$73.10

CRANKCASE HEATERS

CH Series Compressor Heaters



Part #	Volts	Watts	Girth Dim. Min.	Girth Dim. Max.	LIST
CH-100-3	480	50	30-3/16"	37"	$64.80
CH-100-6*	575	50	30-3/16"	37"	$90.20
CH-101	240	54	27-7/16"	34-1/4"	$61.20
CH-101-3	480	54	27-7/16"	34-1/4"	$61.20
CH-102	240	60	25-3/4"	32-9/16"	
CH-102-2	120	60	25-3/4"	32-9/16"	
CH-102-6*	575	60	25-3/4"	32-9/16"	$92.50
CH-103	240	45	24-3/4"	31-9/16"	$61.20
CH-104-MAR	240	75	41-1/2"	48-5/16"	$64.80
CH-104-6*	575	75	41-1/2"	48-5/16"	$90.00
CH-197-MAR	240	25	13-3/4"	20-9/16"	$64.80
CH-1972*	120	25	13-3/4"	20-9/16"	-

** Special Order*

Self-Regulating Crankcase Heaters



Features:
- Energy efficient
- Convenient , easy to install
- Protection against costly compressor burnout
- Fits all crankcases with circumference smaller than 49 inches
- Self regulating makes it safe to overlap without burnout & prevents over-heating of oil

Part #	Power	Output at 0°F	Output at 60°F	LIST
SRCCH-1	120V	60 W	35 W	$179.40
SRCCH-2	240V	60 W	35 W	$179.40

AIR & WATER CLEANSERS

Kon-Trole

Kon-Trole cleans scum and other accumulations in condensate drain pans and humidifiers, eliminating plugged condensate drains and pans, stopped up humidifier pans and odor. They are safe, non-toxic, non-corrosive, completely soluble and do not form any deposit in the pan or drain.



Part #	Description	LIST
PT-153	6 tablets per card, 1 tablet per 3 tons each mo.	-

Humi-Tabs

Controls humidifier odors and scale. Use Humi-Tabs and eliminate most of the extra maintenance and odor problems caused by plugging drains and dirty reservoirs. Humi-Tabs clean sludge, scum and other accumulations in the humidifier thus preventing stopped up humidifier pads.



Part #	Description	LIST
PT-156	Humi-Tabs - 4 tablets per card	$11.10

Odor Neutralizer

ClenAir's unique odor neutralizing formula removes odors quickly and permanently.



Part #	Description	LIST
61001	1/2 lb. Tub	$24.10

ClenAir Liquid Formula

Liquid ClenAir is a fast acting deodorizing product. Eliminates odors via an oxidation process while leaving a fresh scent.



Part #	Description	LIST
61030	Unscented Spray 16oz.	$33.60

PIPE AND THREAD SEALERS

LOCTITE

Loctite Threadlocking 242



Loctite product 242 is a single component anaerobic threadlocking material, which is thixotropic and develops medium strength. The product cures when confined in the absence of air between close fitting metal surfaces and is particularly suitable for less active substrates such as stainless steel and plated surfaces.
TYPICAL APPLICATIONS:
Prevents loosening and leakage of threaded fasteners. Particularly suitable for applications such as pump or motor mounting bolts, engine rocker nuts or equipment housing screws, where disassembly with hand tools is required for servicing.

Part #	Description	LIST
38621	10 ml bottle	$23.60

Loctite Threadlocking Activator 7649



Loctite Activator 7649 is used where increased cure speed of Loctite anaerobic products is required. It is especially recommended for applications with passive metals or inert surfaces and with large bond gaps. Activator 7649 can also be used when cure temperatures are below room temperature. Use of activator is particularly recommended for cure conditions below 15°C.

Part #	Description	LIST
38611-HCC	4.5 oz. aerosol Primer N.	

Loctite Threadlocking 262



Loctite product 262 is a single component anaerobic threadlocking material, which is thixotropic and develops medium to high strength. The product cures when confined in the absence of air between close fitting metal surfaces.
TYPICAL APPLICATIONS:
Prevents loosening and leakage of threaded fasteners. Product is particularly lubricating (low K value) for easy assembly. Particularly suitable for heavy duty applications where resistance to heavy shock, vibration and stress levels is required.

Part #	Description	LIST
38637-HCC	10 ml bottle	$23.40

PIPE AND THREAD SEALERS

LOCTITE

Loctite Refrigerant Sealant 554



Provides maximum solvent resistance on threaded fittings and pipe up to 2" in diameter. It is recommended for refrigeration systems and service with strong chemicals. The sealant is used in place of specialty nonhardening compounds, litharge, glycerine, and sealing tape. Refrigerant sealant is not for slip fitted tube joints. 554 has excellent solvent resistance and withstands temperatures to 300°F (149°C)

Part #	Description	LIST
25882	10 ml bottle	$46.70

Loctite 565 Thread Locker



Loctite product 565 is a high performance curing sealant for tapered pipe threads. The product is a creamy paste-like anaerobic compound that cures when confined in the absence of air and between close fitting metal surfaces. The high lubricating properties of this compound prevent galling on stainless steel, aluminum and all other metal pipe threads and fittings.

TYPICAL APPLICATIONS:
Recommended for sealing metal tapered pipe threads and fittings (up to 5 cm (2") National Pipe Thread (NPT)) for industrial applications in the chemical processing, petroleum refining, pulp/paper, waste treatment, textile, utilities/power generation, marine, automotive, industrial equipment, gas compression and distribution industries. It is also recommended for industrial plant fluid power systems.

Part #	Description	LIST
38635	6 ml. tube	$52.70

Loctite 518



518 is a single component, medium strength, thixotropic, anaerobic sealant which cures rapidly and develops medium strength. The product cures when confined in the absence of air between close fitting metal surfaces.

TYPICAL APPLICATIONS:
Seals close fitting joints between rigid metal faces and flanges. Provides resistance to low pressures immediately after assembly of flanges. Typically used as a form-in-place gasket on rigid flanged connections

Part #	Description	LIST
38638	50 ml. tube	-

Loctite Product PST 564 Thread Sealant



Loctite Product 564 Is a single component, industrial grade, anaerobic pipe sealant formulated specifically for fast, reliable curing on metal, tapered pipe threads and fittings. The lubricating properties of this creamy, paste-like compound facilitate proper assembly and torque tightening of piping system components. Product 564 cures rapidly to secure and seal fittings for high pressure operation (up to 10000 psi with stainless steel fittings). The controlled strength characteristics allow even larger pipe sizes, such as those found in the gas utility lines, to be disassembled quickly and easily.

TYPICAL APPLICATIONS:
Recommended for sealing and easy removal of metal tapered pipe threads and fittings and for industrial applications in the chemical processing, petroleum refining, pulp/paper , waste treatment, textile, utilities/power generation, marine, automotive, industrial equipment and gas compression industries.

Part #	Description	LIST
28754	50 ml tube	$67.80

Loctite Thread Sealant with Teflon

Loctite Thread Sealant with Teflon is a smooth, white paste with added lubricity of Teflon for general purpose metal pipe sealing. This product withstands temperatures ranging from -60°F to 300°F

FEATURES:
- Non-hardening for easy disassembly
- Works to 300°F
- Outperforms Teflon tape and doesn't shred
- No measuring or mixing
- Clean, white appearance

TYPICAL APPLICATIONS:
Lubricating and sealing threaded pipe, pipe fittings and flanges. Ideal for water pipes.

Part #	Description	LIST
1527514	0.25 pt. brush can	$60.80

PIPE AND THREAD SEALERS

Nylog





- Never hardens and always remains viscous and high tack from -40 to 350°F
- Treated gasket materials will not dry, crack or become heat fixed to adjoining metals
- Assembly lubricant for coating bearings, seals, pistons, rings, TXV's, unloaders, actuators, springs, valves, valve caps, valve packings and other internal system mechanisms.

Red Label Nylog should be used with CFC or HCFC refrigeration systems containing either mineral or alkylbenzene as the bulk lubricant. Blue Label Nylog can be used universally or specifically with an HFC bound synthetic oil system.

Part #	Description	LIST
RT201BP-RFT	Synthetic refrigeration oil, POE, PAG	$68.60

X-Pando



- Non-toxic pipe joint compounds for flanged or threaded joints
- Expands as it sets
- Replaces all types of "Pipe Dope". Corrects pitted flange faces or worn threads
- Withstands deflection, high temperature and pressure
- For most pipes (except aluminum)

Part #	Description	LIST
X-PANDO-14OZ	14 oz	$50.50

PIPE AND THREAD SEALERS

Loctite Thread Treatment Sticks



268 High Strength Threadlocker Stick

- Eliminates loosening from vibration, shock, and thermal expansion
- Prevents rust & corrosion while sealing and protecting threads
- Requires localized heat and hand tools for removal

Part #	LIST
38136	



PST® 561 Thread Sealant Stick with Teflon®

- Immediate low pressure sealing to 100 psi
- Protects threaded areas from rust and corrosion
- Provides exceptional fluid compatibility and chemical resistance
- Eases disassembly
- Seals all types of metal tapered threads and fittings to NPT specs

Part #	LIST
38133	



C5-A® Copper Anti-Seize Stick

- Protects metal parts in high heat environments up to 1800°F
- Prevents rust, corrosion, seizing, and eases disassembly
- Reduces friction and wear to critical parts
- Buttery texture ideal for both coarse and fine threads
- Exceptional lubrication properties

Part #	LIST
38137	-



QuickStix™ 548™ Gasket Eliminator™

- Designed for rigid flange assemblies
- Forms a flexible, solvent resistant seal
- Offers excellent oil resistance on rigid flange sealing
- Seals up to 300 degrees F (149 degrees C)
- Fills gaps to 0.010”

Part #	LIST
39151	-



QuickStix™ 534™ Hi-Tack Gasket Dressing

- Allows a precut gasket to be positioned holding it in place for assembly
- Holds aggressively yet still allows for repositioning of the cut gasket
- Seals up to 300 degrees F (149 degrees C)
- Offers added control and ease of use
- Solvent free and low odor

Part #	LIST
39156	$41.90

Teflon Tapes



Part #	Description	Size	LIST
TEFLON-TAPE	Pipe compound in tape form	1/2" x 480"	$1.40
GT260	Specifically formulated for use on Natural, LP & Synthetic gases	1/2" x 260"	$5.60
PINK-TEFLON-TAPE	High density teflon tape - pink	1/2" x 6m	$3.50

ADHESIVES AND EPOXY

Loctite Quick Gel



Fast curing, single component gel cyanoacrylate adhesive. It is specifically formulated for difficult to bond substrates. The gel consistency prevents adhesive flow even on vertical surfaces.

TYPICAL APPLICATIONS:
Rapid bonding of a wide range of metal, plastic or elastomeric materials, particularly suited for bonding porous or absorbent materials such as wood, paper, leather or fabric.

Part #	Description	LIST
38615	3 gm tube	$15.20

Nu-Calgon Spray-n-Bond



A wide web spray adhesive formulated specifically for insulation and duct liner applications. Ideal for porous surfaces, it is waterproof, flexible, transparent, non-staining, and it can be used for both temporary or permanent bonds.

Part #	Description	LIST
4369-75	12 oz can	$29.10

Loctite Contact Adhesive



A yellow, viscous liquid contact cement for all types of weatherstripping and general purpose bonding.

FEATURES:

- Fast, high strength bonds
- Works on all types of weatherstripping, porous and non-porous surfaces
- Bonds rubber, metal wood, gasketing materials and fabric backed vinyl upholstery

Part #	Description	LIST
30537	5 fl. oz. tube	$38.20

ADHESIVES AND EPOXY

Loctite Fixmaster® Fast Cure Epoxy Mixer Cups

Premeasured epoxy mixer cups. Bonds in 5-15 minutes. Excellent chemical resistance. Fills porosities and can be used to build up worn parts. Ideal for bonding glass, hard plastics, rubber, and metal.

Part #	Description	LIST
39088	.12 fl. oz. cups, 4 pk, Grey	$53.70

JB Weld & Water Weld





Part #	Description	LIST
8265-S	Cold Weld Compound	$21.10
8277	Water-Weld Epoxy Stick	$24.50
50176F	Kwikweld Syringe	$23.60
50172F	Marine Epoxy Syringe	$26.80

QuikCopper®

QuikCopper Epoxy Putty Stick is a hand-kneadable, fast-setting, copper-reinforced polymer compound for permanent repairs to copper, brass, bronze and other non-ferrous metals.



Part #	LIST
462570	$41.80

LA-CO Heat-Seal Stik Epoxy Sealer

- 3/8 oz.
- One part epoxy
- Pressures to 450 PSI
- Fast, repairs completed in 90 seconds
- Use on aluminum, copper & other metals, glass & ceramics
- Stick melts, seals & cures in one operation
- Ideal for use on refrigeration systems



Part #	LIST
11577	$92.20

Fire Stop Sealant

For sealing around pipe and wiring penetrations through fire-rated walls and floors. Light Grey.

Part #	Description	LIST
66640	300 ml.	$37.90



ADHESIVES AND EPOXY

Kason Silicone Adhesive

For general purpose glazing and sealing applications.
Interior or exterior use. Mildew resistant.



Part #	Description	LIST
3700-WHITE	White	$22.60
3700-CLEAR	Clear	$22.60
3700-ALLUMINUM	Aluminum	$22.60
3700-BLACK	Black	$22.60

Loctite Superflex Silicone Adhesive Sealant

General purpose, one-part silicone adhesive sealants cure at room temperature to form a tough rubber seal. Will not slump in overhead or vertical applications. Formulated to withstand extreme temperature cycling, U.V. light and ozone.



	Description	LIST
59575	Clear Silicone 300ml cartridge	$52.30
59475	White Silicone 300ml cartridge	$56.60

Loctite High Temperature RTV Silicone Adhesive

High temperature silicone makes gaskets that resist 600°F (316°C) intermittently. Resists aging, weather and thermal cycling without shrinking, cracking, hardening. Fills gaps to .25". Seals ducting in furnaces, ovens, boilers, and exhaust stacks.



Part #	Description	LIST
59675	Red, 300 ml cartridge	$56.70
40465	Red, 7.25 oz self-dispensing	$90.00
18581	Gray, 300 ml cartridge	$101.00

CHEMICALS

Thawzone

Thawzone chemically "dries" all refrigerants (R-12, R-22, R-134a etc.) methyl chloride and methylene chloride. Thawzone frees frozen systems due to moisture in 5 minutes. It prevents refreezing, does not leave any residue, does not contain any dissolved solids or methanol, and works with or without solid dryers.



Part #	Description	LIST
H17004	4 oz plastic jar	$31.20

Silica Gel

Non-corrosive and non-toxic. Has a tremendous number of sub-microscopic pores which attract water vapor condense it and hold it. Turns pink with moisture.



Part #	Description	LIST
550	Silica gel 8-20 mesh, 6.4 lb bottle	-

Drain Solve

Drain Solve is an alkaline-based drain opener which removes grease, hair, vegetable and other organic matter. It is no-fuming, and it will clean and clear drains quickly.



Part #	Description	LIST
4165-24	1 quart bottle	$30.80
4165-08	1 gal	$98.10

SPRAY PAINT

Spray Paint

Part #	Description	LIST
80340	Blue Spray Paint	$29.90
80350	Dark Gray Spray Paint	$34.90
80365	Yellow Spray Paint	$35.40
80395	Gray Primer Spray	$35.20
80400	Red Oxide Primer	$29.90
80465	Aluminum Spray Paint	

Part #	Description	LIST
81200	Orange Inverted Marking Paint	-
81988	White Gloss Spray Paint	$36.60
81989	Black Gloss Spray Paint	$47.30
81991	BLack Flat Spray Paint	$47.30
81997	White Inverted Marking Paint	-



HAND CLEANERS

Orange Lotion Hand Cleaner Pumice Formula

Quickly removes ground-in grease and grime without abrading skin like coarser pumice hand cleaners.

Part #	Description	LIST
61203	440 ml squeeze bottle	$25.90
61201	3.5 L bottle with pump	$117.00



Orange Lotion Hand Cleaner Smooth Formula

Smooth Lotion is ideal for those who prefer a hand cleaner without pumice or have extra sensitive skin.

Part #	Description	LIST
61202	440 ml squeeze bottle	$20.10
23218	3.5 L bottle with pump	$71.00



Heavy Duty Hand Cleaning Wipes

Part #	Description	LIST
58310	50 - pop-up cannister	$36.00
4185-75	75 - Great Wipes	$63.70



WIPERS

ToolBox Interfold Wiper



- Works like cloth and is a low lint wiper
- Perfect for medium-duty wet or dry wiping applications

Part #	Description	Dimensions	Quantity	LIST
05280T	White	8.5" x 16.5"	126 sheets / box	$40.20

Kimberly-Clark WYPALL L20 Wipers



WYPALL L20, 4 ply tissue, POP-UP Box. Textured side for cleaning power. Contains no binders or glues. Multi-ply capacity for large spills.

Part #	Colour	Dimensions	Put-Up	LIST
47044	White	9.1" x 16.8"	88 / box	$33.20

Polo Wiping Rags



Polo Fleece wipers... All cloths completely laundered and sterilized. Highly absorbant, very soft, cotton/polyester mix

Part #	Description	LIST
WIPING-RAG-CLC	10lb box	$27.10

COIL AND CONDENSER CLEANERS

NU-CALGON

Green Select



Design for the Environment
U.S. EPA
Recognized for Safer Chemistry
www.epa.gov/dfe

Cal-Green™

Cal-Green has been recognized by the EPA's Design for the Environment program, which tests and identifies products that are safer for the environment. Cal-Green is a plant-based, natural condenser cleaner that is powerful enough to remove dirt, grease, and grime but environmentally safe for use around people, plants, animals, and aquatic life. This non-foaming, non-toxic concentrate is perfect for cleaning residential or commercial systems and restores their efficiency while being environmentally responsible.

Part #	Size	LIST
4190-08	1 Gallon	$93.90

Evap-Green™

Evap-Green is also part of the EPA's Design for the Environment program which tests and identifies products that are safer for the environment This no rinse product is perfect for numerous heating and air conditioning applications such as evaporator coils, roof top units, window units, metal filters, fan blades, and more. By using Evap Green, a natural plant based formulation, the coil is being cleaned with the most environmentally friendly product available. It is also safe to be used around people, plants, animals, and aquatic life.

Part #	Size	LIST
4191-08-CAL	1 Gallon 00-11-06-KPX	$87.50

Nu-Calgon's Coil Cleaner Selection Guide

	NU-BRITE® 4291-18	NU-BRITE® 4291-08 (1 gal) 4291-05 (2.5 gal) 4291-01 (55 gal)	FOAM-BRITE® 4178-08 (1 gal) 4178-05 (2.5 gal) 4178-01 (55 gal)	ALKA-BRITE® PLUS 4120-08 (1 gal)	CAL-BRITE® 4133-08 (1 gal)	SPECIAL HD CALCLEAN® 4143-08 (1 gal) 4143-06 (2.5 gal) 4143-01 (55 gal)	CALCLEAN® 4081-75	CALCLEAN® 4135-08 (1 gal) 4135-06 (2.5 gal) 4135-01 (55 gal)	NU-BLAST® 4290-75	TRICLEAN 2X 4372-24 (1 qt)
EQUIPMENT USED ON										
Condenser Coils	✔	✔	✔	✔	✔	✔	✔	✔	✔	✔
Evaporator Coils		✔		✔	✔	✔	✔	✔	✔	✔
Permanent Filters		✔		✔	✔	✔	✔	✔	✔	✔
Electronic Air Filters						✔				✔
Small Condenser Coils	✔	✔	✔	✔	✔	✔	✔	✔	✔	✔
Small Evaporator Coils		✔	✔	✔	✔	✔	✔	✔	✔	✔
Fan Blades, Motors, Etc.			✔		✔	✔	✔	✔	✔	✔
Microchannel Coils						✔	✔	✔	✔	✔
FORMULATED TO REMOVE										
Greasy Dirt & Oil	✔	✔	✔	✔	✔	✔	✔	✔	✔	✔
Cooking Grease	✔		✔	✔	✔	✔	✔	✔	✔	
Lint, Dust, Dirt & Grime	✔	✔	✔	✔	✔	✔	✔	✔	✔	✔
Tobacco Tars						✔	✔	✔	✔	✔
Oxide (Corrosion) Deposits	✔		✔	✔	✔	✔	✔	✔	✔	✔
Cottonwood/ Bugs	✔		✔	✔	✔	✔	✔	✔	✔	✔
FEATURES & BENEFITS										
Product Type		Alkaline	Alkaline	Alkaline	Alkaline	Alkaline	Alkaline	Alkaline	Acidic	Alkaline
Foaming	✔		✔	✔	✔	✔	✔		✔	
Brightening	✔		✔		✔		✔		✔	
Degreasing	✔		✔		✔		✔		✔	✔
Disinfectant						✔		✔		
Non-Rinsing		✔		✔		✔		✔		✔*
Coil Protection										
Biodegradable	✔	✔	✔	✔	✔	✔	✔	✔	✔	✔
USDA Authorized	✔	✔	✔							✔*
EPA Registered						✔		✔		
NSF Registered	✔		✔	✔	✔		✔			✔

	SPECIAL HD CALCLEAN® 4143-08 (1 gal) 4143-06 (2.5 gal) 4143-01 (55 gal)	CALCLEAN® 4081-75	CALCLEAN® 4135-08 (1 gal) 4135-06 (2.5 gal) 4135-01 (55 gal)	NU-BLAST® 4290-75	TRICLEAN 2X 4372-24 (1 qt)
EQUIPMENT USED ON					
Condenser Coils	✔	✔	✔	✔	✔
Evaporator Coils	✔	✔	✔	✔	✔
Permanent Filters	✔	✔	✔	✔	✔
Electronic Air Filters	✔				✔
Small Condenser Coils	✔	✔	✔	✔	✔
Small Evaporator Coils	✔	✔	✔	✔	✔
Fan Blades, Motors, Etc.	✔	✔	✔	✔	✔
Microchannel Coils	✔	✔	✔	✔	✔
FORMULATED TO REMOVE					
Greasy Dirt & Oil	✔	✔	✔	✔	✔
Cooking Grease	✔		✔	✔	✔
Lint, Dust, Dirt & Grime	✔	✔	✔	✔	✔
Tobacco Tars	✔	✔	✔	✔	✔
Oxide (Corrosion) Deposits	✔	✔	✔	✔	✔
Cottonwood/ Bugs	✔	✔	✔	✔	✔
FEATURES & BENEFITS					
Product Type	Solvent	Solvent	Alkaline	Protectant	
Foaming	✔				
Brightening	✔				
Degreasing	✔	✔	✔		
Disinfectant					
Non-Rinsing	✔	✔		✔	
Coil Protection				✔	
Biodegradable			✔	✔	
USDA Authorized					
EPA Registered					
NSF Registered			✔		

EVAP POW'R®-C 4168-08 (1 gal) 4168-05 (2.5 gal) 4168-01 (55 gal)	EVAP FOAM® NO RINSE 4171-75	EVAP-FRESH® NO RINSE 4166-75	EVAP-FRESH® NO RINSE 4166-08 (1 gal)	TRI-POW'R® HD 4371-88 (1 gal) 4371-81 (55 gal)	GREEN CLEAN 4186-24 (1 qt) 4186-08 (1 gal) 4186-01 (55 gal)	CAL-GREEN™ 4190-08 (1 gal) 4190-01 (55 gal)	EVAP-GREEN™ 4191-08 (1 gal) 4191-01 (55 gal)	CAL-BLAST® 4132-20	CAL-SHIELD® 4148-32 (1 qt) 4148-08 (1 gal)

* Dilution ratios for no rinse applications: Tri-Pow'r HD= 10:1, CalClean Special HD= 40:1, CalClean= 10:1

COIL AND CONDENSER CLEANERS

NU-CALGON



Nu-Brite®

Nu-Brite is the most effective coil cleaner available today. It foams, brightens, and is an equally effective yet safer alternative to HF acid-based products. It produces a high volume of foam that cleans more effectively than acids, particularly in removing grease. Biodegradable. USDA Approved.

Part #	Size	LIST
4891-08	1 Gallon	$82.30
4291-05	2.5 Gallons	$225.60
4291-18	18 Ounce Can	$34.00

Blackhawk

Blackhawk is an expanding foam, non-fragrance coil cleaner for HVAC/R applications. The product's expanding foam permeates deep within the coil then liquefies to quickly remove grease, grime, and other oily surfaces. Blackhawk's heavy-duty formulation is powerful, yet safe and problem-free in food processing areas – produces no objectionable fumes.



Part #	Size	LIST
4127-75	18 Ounce Can	$32.50



CalClean®

An alkaline detergent formulated for cleaning evaporator coils, air-cooled condenser coils, metal filters, fan blades, and other surfaces soiled with grease, dust and dirt. Biodegradable. USDA Approved.

Part #	Size	LIST
4820-08	1 Gallon	$113.80
4135-06	2.5 Gallons	$303.00
4081-75	20 Ounce	-



Special HD CalClean®

The best cleaner available. Specifically formulated to remove tobacco tars from electronic air cleaners as well as the most stubborn deposits from finned coils. Biodegradable. USDA Approved.

CalClean HD Electronic Cell Cleaner

A ready-to-use formulation, ideal for electronic air cleaners.

Part #	Size	LIST
4823-08	1 Gallon	$121.10
4143-06	2.5 Gallons	$317.00



Foam-Brite®

The ultimate in foaming alkaline cleaners. It provides for excellent cleaning and brightening, and at the same time provides tremendous foaming to push dirt and grime out of the coil. Can easily be used in place of the more dangerous HF acid-based products. Biodegradable.

Part #	Size	LIST
4178-08	1 Gallon	$84.20
4178-05	2.5 Gallons	$228.20



Alka-Brite® Plus

A non-acid, alkaline based product for brightening and cleaning air cooled condensers. It contains the best available detergents to quickly penetrate and remove oxidation, and its foaming action helps to lift greasy soils out of the coil. Biodegradable.

Part #	Size	LIST
4120-08	1 Gallon	$86.40



Cal-Brite®

Cal-Brite is a low pH cleaner developed for cleaning evaporator coils, air-cooled condensers and other finned cooling and heating coils. It is based upon glycolic acid and other ingredients, including the unique surfactant, Merpol®. It provides moderate foaming and brightening and is safe for use indoors as well as outdoors.

Part #	Size	LIST
4133-08	1 Gallon	$110.50

COIL AND CONDENSER CLEANERS

NU-CALGON



Evap Pow'r ®

A no rinse product formulated for cleaning evaporator coils. It is metal-safe,and it cleans and emulsifies even the most stubborn soils and deposits.Evap Pow'r-C is the concentrate while Evap Pow'r-RTU is the ready-to-use formulation. Biodegradable. USDA Approved.

Part #	Size	LIST
4168-08-CAL	1 Gallon	$78.30



Green Clean

A pleasantly scented, all-purpose cleaner designed for the rapid removal of grease and other heavy soils. It can be used right out of the bottle or diluted for milder jobs. Biodegradable.

Part #	Size	LIST
4186-24	1 Quart Spray Bottle	$49.10
4186-08-CAL	1 Gallon	$93.90



TriCkean 2x

TriClean 2x is equipped to assist in the annual cleaning of outdoor of residential or light commercial air conditioning or heat pump coils. The concentrated formula is tailored to its integrated sprayer packaging, resulting in time savings of sprayer preparation/clean-up or the cost of sprayer maintenance from usage wear.

Part #	Size	LIST
4372-24	Quart Sprayer w Hose Connector	$73.90



Evap Foam® No Rinse

Evap Foam No Rinse is a high performing, heavy duty detergent. It is formulated with special surfactants and alkaline cleaners that have been developed into a foaming, no-rinse product. Evap Foam is ideal for use on most coils, but it is particularly suited for use on cooling or evaporator coils. The aerosol can be sprayed either right side up or upside down.

Part #	Size	LIST
4171-75-CAL	18 ounce can	$39.00



Tri-Pow'r ® HD

An outstanding general purpose coil cleaner, providing detergency and degreasing as well as deodorizing capability. Its positive emulsion technology is very effective against oily grime as it converts the deposits into a more fluid or liquid form that can be easily rinsed away. It is non-acid, non-toxic, and biodegradable.

Part #	Size	LIST
4371-88	1 Gallon	$62.80



Nu-Blast® Condenser Coil Cleaner

A no-rinse condenser coil cleaner in a convenient aerosol package. Double action of high pressure blast and solvent cleaning restores design efficiency of condenser coils. It is non-flammable and non-conductive. No rinse required... cleaning solvent evaporates completely. Use with adequate ventilation.

Part #	Size	LIST
4290-75-CAL	18 ounce can	$55.30



Cal-Shield®

Cal-Shield is a synergistic liquid formulation based upon DuPont's Teflon® fluoro-additives. It is specifically designed for application on air-cooled condensers, evaporator coils, and other finned heating and cooling coils where it forms a micro-thin or molecular film of Teflon. Once applied, Cal-Shield will shield and protect the coil from adverse conditions within the operating environment.

Part #	Size	LIST
4148-08	1 Gallon	$260.90
4148-32	1 Quart Spray Bottle	$107.70



Cal-Blast Condenser Coil Cleaner

Cal-Blast condenser coil cleaner quickly dissolves those stubborn, resistive deposits and oils that are found to plug coils, particularly those located in kitchens. It contains a quick-drying solvent with a pleasant scent! The high dielectric strength and non-flammable formula in Cal-Blast is great for most applications and will not short out electrical equipment

Part #	Size	LIST
4132-20	20 ounce can	$39.40

SPRAYERS
NU-CALGON



Coil Gun®

A different approach to coil cleaning - a "hose-end" sprayer that features 5 different mix ratio settings designed for coil cleaners. Utilizes a 2 quart capacity bottle and includes a foam wand as well as "quick disconnect" capability.

Part #	LIST
4774-0	$304.00



No. 50P Poly Sprayer

The No. 50P is constructed of high-density translucent polyethylene. It has a half gallon (3 pint) capacity. The nozzle is adjustable and the flow rate is controlled by a thumb lever. It comes with a 7″ polyethylene pump.

Part #	LIST
4770-0	$149.50



No. 100P Cal-Shield® Poly Sprayer

This sprayer is constructed of high-density translucent polyethylene. It has a funnel top for easy chemical pouring and a 1 gallon working capacity. It comes with a 8″ polypropylene pump, brass handle and extension tube with adjustable nozzle, a wear-resistant hose, and a pressure relief valve. It is highly recommended that this sprayer be dedicated to Cal-Shield applications.

Part #	LIST
4770-2	



No. 220CP Poly Sprayer

The No. 220CP Poly Sprayer is constructed of high-density translucent polyethylene with a funnel-top that provides easy chemical pouring. This 2 gallon capacity sprayer features an easy fill level indicator and comes with an 8″ pump and a high resin plastic adjustable nozzle with three feet of hose.

Part #	LIST
4771-3	



No. 200P Poly Sprayer, Water Pressurizing

The No. 200P Poly Sprayer is constructed of high-density translucent polyethylene. It has a 2 gallon working capacity, funnel top, pump handle, and equipped with all-brass hardware. No pumping is required. Pressurize the sprayer with water through a "quick disconnect" fitting.

Part #	LIST
4771-2	



No. 300P Poly Sprayer

The No. 300P Poly Sprayer is constructed of high-density translucent polyethylene. It has a funnel-top and a 3.5 gallon capacity (3 gallon working capacity). It comes with a 10″ Celcon pump, brass extension tube with adjustable nozzle, and five feet of vinyl hose.

Part #	LIST
4772-0	$370.00



Multi-Purpose Sprayer

A 24 ounce capacity sprayer. It is ideal for small cleaning jobs, such as window units and water coolers.

Part #	LIST
4768-W3	$25.50

ICE MACHINE CLEANER AND WATER TREATMENT PRODUCTS

NU-CALGON

Nickel-Safe Ice Machine Cleaner



The original Nickel-Safe Ice Machine Cleaner. It is a food-grade citric-phosphoric acid product for removing scale deposits from ice machines having nickel-plated or tin-plated evaporators, and it is acceptable for use in all ice machines containing nickel. It mixes to form a green solution which makes rinsing easier. USDA Approved.

Part #	Size	LIST
4841-AB-CAL	16 fl oz	$45.70
4841-08-CAL	1 Gallon	$276.60

Liquid Ice Machine Cleaner



Liquid Ice Machine Cleaner is a food-grade phosphoric acid that is fast acting, yet safe to use. It has been formulated to remove scale deposits from ice machines and coffee urns. It does not give off any harsh fumes or contain chlorine or chlorides that would attack stainless steel.

Part #	Size	LIST
4834-C7	8 fl oz	$41.00
4834-08	1 Gallon	$355.00

EQUIPMENT SCALE REMOVAL

NU-CALGON



Liquid Scale Dissolver

A hydrochloric (muriatic) acid formulated to remove calcium scales from cooling towers and other water-cooled equipment. It contains low-foaming corrosion inhibitors and a built-in pH color indicator. pH test paper is also included. USDA Approved.

Part #	Size	LIST
4845-K8	1 Gallon	$104.10
4845-PB	5 Gallons	$375.00



Season Treat (Micromet Plates)

This patented Micromet® Plate product is contained in a unique flow-through package. The package design makes it simple to treat small cooling towers and evaporative condensers. Simply unwrap the package and place it in the sump. One canister treats up to 10 tons for scale (5 tons for corrosion) for 5 to 6 months.

Part #	Size	LIST
4364-88	1 Canister	$611.00



No. 31-TX1 Acid Pump

Compact submersible pump designed for circulating strong acids and cleaning solutions. All parts are constructed of acid-resistant materials.

Part #	LIST
4603-0	$773.00



HK-31 Hose Kit

An accessory item available for use with the No. 31-TX Acid Pump. Kit includes two 1/2 inch tubing adapters, two 10 foot sections of 1/2 inch clear plastic tubing and three hose clamps.

Part #	LIST
4604-0	$209.90



Eco-Lyme Descaler

Eco-Lyme is a specially formulated new age descaler providing performance of traditional high strength descalers in removing scale and corrosion deposits. It's the only product in the HVAC/R Industry that provides performance comparable to hydrochloric acid but safer on metals, odorless, low-foaming, and is 100% biodegradable. Eco-Lyme will quickly and safely remove scale and/or corrosion deposits from copper, steel, iron, aluminum, brass, wood, rubber and plastic equipment. Care must be exercised with galvanized surfaces.

Part #	Size	LIST
4167-08	1 gallon	$83.50
4167-05	5 gallon	$381.00



Season Start® "Imperial Grade" Scale Remover

A powdered sulfamic acid formulation that contains the best inhibitors available for protecting all metals including galvanized metal. It is the best and the safest dry acid cleaner available. It contains a built-in pH color indicator as well as wetting and anti-foaming agents. USDA Approved.

Part #	Size	LIST
4360-88	10 lbs	
4360-84	50 lbs	

COOLING TOWER WATER TREATMENT PRODUCTS

NU-CALGON

No. 340 Liquid Scale Inhibitor



A unique inhibitor that is extremely effective in hard or highly alkaline water. No. 340 Liquid Scale Inhibitor is stable and does not form any orthophosphate sludge. It is most effective at treatment levels between 10 and 15 parts per million (about 1 gallon of No. 340 per 100,000 gallons of water). A feed rate of 1/2 gallon per month is recommended for each 30 tons and 1 gallon per minute bleed-off. A constant, accurate feed is acomplished with the No. 215 Drip Feeder on systems up to 60 tons. For larger systems, a No. 1075 Drip Feeder or CMS Feed Pump should be used.

Part #	Size	LIST
4340-08	4 liter bottle	$338.00

WATER TREATMENT

Glycol Refractometer



- Measures the ice point of glycol and the operation stat of battery charging liquid
- Compensation temperature range 10° to 30°C
- Included accessories: cleaning cloth, one dropper, mini screwdriver, distilled water, soft pouch, hard carrying case

Function	Range	Minimum Scale
Ethylen & Propylene Glycol	0 to -50°C	5°C
Battery Fluid	1.15 to 1.30 sg	0.01 sg

Part #	LIST
61301	$485.00

WATER TREATMENT

NU-CALGON

Evap-Treat®



Used in evaporative coolers or "swamp coolers" to prevent scale and corrosion. Place it in the cooler sump and it will last all season long, thereby increasing pad life. Utilizes 6R Micromet®, a food-grade NSF-certified polyphosphate.

Part #	Size	LIST
4173-04	Up to 6,500 cfm	$88.50
4173-06	Up to 10,000 cfm	$103.90

Humidi-Treat™



Humidi-Treat is designed for humidifiers using up to 25 gallons per day and will inhibit scale for one season. Install Humidi-Treat on the water line that supplies water directly to the humidifier.

Part #	LIST
4190-02	$81.50

GLYCOL

Freez-Kontr'l®

A complete heat transfer fluid and anti-freeze based upon non-toxic propylene glycol. It is formulated to provide corrosion protection and freeze protection for chilled water, hydronic, and other closed systems. Safe to use where contact with potable water is possible.



Part #	Size	LIST
4188-07	1 Gallon Bottle	$71.80
4188-05-CAL	5 Gallon Pail	$350.00
4188-02	55 Gallon Drum	$3,494.00



Freez-Therm®

An inhibited heat transfer fluid and anti-freeze based upon ethylene glycol. It can be used in chilled water, hydronic, and other closed systems for both freeze point suppression and corrosion inhibition. An uninhibited version is also available in drums on special order.

Part #	Size	LIST
4189-07	1 Gallon	-
4189-05	5 Gallons	$299.90

Closed Systems & Steam Boilers



Ty-Ion® B20

A liquid nitrite-borax corrosion inhibitor and dispersant for closed recirculating systems. It combines corrosion inhibitors, a unique copolymer dispersant, and a color indicator to facilitate leak detection, into a complete treatment for hot and chilled water closed systems containing ferrous and non-ferrous metal components.

Part #	Size	LIST
7537-05	5 Gallons	$806.00



Ty-Ion® B14A

An all-in-one boiler treatment product that controls scale, corrosion, and condensate line corrosion in low pressure, low make-up steam heating boilers where 90% or more of the condensate is returned. It is chromate-free and contains a color indicator for visual determination of treatment residual. Its balanced formulation provides an energy efficient way of heating.

Part #	Size	LIST
7519-05	5 Gallons	$863.00

SPECIALTY PRODUCTS



Pneu-flush®

A flushing and cleaning system specifically designed for pneumatic control air lines. It utilizes DuPont® Vertrel® XM, a premier ozone-safe HFC cleaning solvent. Pneu-Flush works quickly and easily to clean and purge the compressed air lines in HVAC control and other pneumatic systems.

Part #	Description	LIST
4300-89	Injection Tool	$110.40

(Injection Valve Fits Rx11-flush®, Zerol® Ice, and A/C Re-New as well)



Degreasing Solvent ef

A degreasing solvent that is ozone-safe and environmentally friendly. It is a volatile solvent that provides effective degreasing and cleaning as well as controlled drying with absolutely no residue. It has a dielectric strength in excess of 26,000 volts.

Part #	Description	LIST
4162-07	1 Gallon	
4083-75	17 Ounce Can	



R_X11-flush®

R_X11-flush is an ozone-safe solvent engineered specifically for flushing refrigeration and air conditioning systems and line sets. It is strong enough to rinse away particulates, sludge, carbon residues, acids, oils, and water after burnouts. R_X11-flush is ideal for flushing line sets on R-410A conversions, works fast, and is easy to use.

Part #	Description	LIST
4300-09	Rx11-flush 1 lb. Canister	$212.20
4300-11	Rx11-flush 2 lb. Canister	$408.00
4300-10	Start-up Kit (2+1)	$972.00
4300-15	Rx11-flush 13 lb. Canister	$2,411.00
4300-30	Rx11-flush Liquid 19.5 oz Canister	$212.20

R_X11-flush® Accessories

The R_X11-flush product family also includes various support tools. This includes the Injection Valve for hooking up to a charging hose for flushing and the Flushing Tool for facilitating line set flushing. In addition, the R_X11-flush Gun with a built-in flushing attachment and the R_X11-flush Hose (24″) are available.

Part #	Description	LIST
4300-50	Flushing Tool	$45.00
4300-51	Rx11-Flush Gun	$104.00
4300-52	Rx11-Flush Hose (24")	$76.60
4300-89	Injection Access Valve	$110.40

(Injection Valve Fits Pneu-flush®, Zerol®Ice, and A/C Re-New as well)



Flushing Tool



R_X11-flush Gun



R_X11-flush Hose



Injection Valve

LIQUID LEAK DETECTORS



Cal-Blue® Plus Gas Leak Detector

Cal-Blue Plus is a complete gas leak detector, freeze protected to 5˚F. Its high viscosity formula enables it to remain in contact with the applied surface for an extended period of time, thereby allowing it to detect the smallest of leaks. It is also non-corrosive to metal, and it will not affect ultraviolet or "black lights." Suitable for all refrigerants, natural gas, and oxygen.

Part #	Description	LIST
4182-53	6 Ounce Bottle W/Dauber	$19.60
4182-24-CAL	1 Quart Spray Bottle	$37.70
4182-08-CAL	1 Gallon Bottle	$110.00



Cal-Blue® LT Gas Leak Detector

The same high quality formulation as regular Cal-Blue Plus, but has added freeze-protection to -20˚F. It is the ideal detector for geographical areas that may experience very cold temperatures.

Part #	Description	LIST
4183-24-CAL	1 Quart Spray Bottle	$56.10
4183-08	1 Gallon Bottle	$153.50



Fluorescent Gas Leak Detector

A fluorescent formulation that provides improved visibility and long lasting bubbles. It is non-corrosive to metals and is freeze protected to 5˚F. Suitable for high and low temperature applications. Can be used for most refrigerants, natural gas and oxygen systems. USDA Approved.

Part #	Description	LIST
4184-53	8 Ounce Bottle W/ Dauber	$21.30
4184-24	1 Quart Spray Bottle	$57.30
4184-08	1 Gallon Bottle	$121.70



Gas Leak Detector

A high viscosity liquid that forms bubbles when daubed on a gas leak. Non-corrosive, non-staining, harmless to skin. Detects any type of gas leak such as air, compressed air, carbon dioxide, nitrogen, natural gas, and refrigerant gases. Freeze-protection to -20˚F. Six ounce plastic bottles have dauber in cap. USDA Approved.

Part #	Description	LIST
4832-C9	6 Ounce Bottle W/ Dauber	$28.20

Trace

A red dye internal tracer type leak detector for use with mineral oil base refrigerant lubricants and hydraulic systems. Leaks shown as intense red stains. Trace is nonvolatile, will not sludge oil or deposit gum. Trace is soluble in the lubricant and liquid refrigerant and travels with the lubricant. Oil separators will remove Trace and should be bypassed. Trace passes through solid dryers, but the colour intensity may be reduced.

Part #	Size	LIST
H20004	4 oz bottle	$32.20



INSULATION PRODUCTS

NU-CALGON

Cork Tape



Cork Insulation Tape has been developed specifically for the air conditioning, refrigeration industry. Through detailed research and extensive testing, this tape has been formulated and manufactured to meet specific Nu-Calgon Wholesaler Inc. specifications as an insulating material for preventing sweating and condensation on refrigerant lines, cold pipes and other commercial refrigeration and air conditioning systems. It also can serve as an excellent insulator on hot pipes, and can be used as gasketing material and as sound-deadening material. It can also be used for wrapping valves, tees, and fittings, and can be applied at temperatures as low as -30°F.

Part #	Size	LIST
4217-W3	2" x 1/8" x 30' roll	$86.80

Foam Tape



Foam Insulation Tape is formulated from the hightest quality elastomeric thermal insulation material. It is manufactured in accordance with selected specifications to meet the needs of today's air conditioning, refrigeration applications. Its closed cell construction seals out air, retarding heat transfer and providing complete insulation. It can be used on cold water pipes, chilled water and refrigerant lines to prevent sweating and condensation. Foam Tape can also be used on hot water lines for better insulation against heat loss. Keeps cold lines cold... and hot lines hot. Can be overlapped or edges can be butted.

Part #	Size	LIST
4218-W3	2" x 1/8" x 30' roll	$65.30
4218-12	Dispenser Pack	$72.50

Insulation Sealing Slugs



Sealing Slugs compound is formulated and manufactured for use in many sealing, insulating, and general maintenance applications. It has excellent adhesion capability and is non-staining, non-hardening and uneffected by wide variations in temperature... and excellent thumbing grade. It is packaged in 2 lb. boxes, each box contains two one pound bars.

Part #	Size	LIST
4216-92	2 lb. box	$47.40

Insulating Sealing Cords



Insulation Sealing Cords are non-staining sealers formulated from the highest quality raw materials. They are water-resistant, dust-resistant and white in colour with excellent insulation value. They are available in a preshaped extruded size, 3/8", with serrated release paper.

Part #	Size	LIST
4216-27	3/8" x 25' roll	$52.40

SEALERS AND INSULATION MATERIALS

Duct Seal™ 321

For Indoor/Outdoor applications - water base



Duct-Seal 321 in an all purpose industrial grade duct sealant for all types of metal duct, glass fiber duct board, and flex duct, as well as duct fabric and flexible tubing runouts. It includes UV inhibitors for extended outdoor exposure and built-in fiber reinforcement for added strength. This non-toxic water based product is solvent free and is suitable for residential use.

Sure-Grip™ 404

For Indoor/Outdoor applications - solvent base



Sure-Grip 404 is a fiber-free, solvent based, synthetic rubber duct sealant. Its exceptional strength, fast drying time and unmatched flexibility make it ideal for those applications requiring a solvent based sealant. Sure-Grip's low-viscosity, no-drip, no-string formulation allows fast application for labor savings and extended coverage for lower installed cost.

BLACK FLASH Flashing Cement Compound

BLACK FLASH Flashing Cement Compound is an all-weather compound made of only the highest quality, tough plastic asphalt oils with long-fiber. Can be applied to damp surface; never pulls away from the joint. Won't crack at any temperature.



BFC



BF1

Part #	Description	LIST
BF1-WTM	Black Flash Compond, 1-GAL	$98.40
BFC-WTM	Black Flash Compond, Cartridge	$158.70

SEALERS AND INSULATION MATERIALS

Thermal Mastic



A heat-conducting compound that increases heat transfer up to 4 times the rate obtained with mechanical mounting only. Can be used wherever rapid heat transmission is desired; between coils and liners, between liquid and suction line heat exchangers and between lines and thermal control bulbs of expansion valves and in bulb wells of thermostatic control devices.

Part #	Description	LIST
Q77-1000	8 oz tube	$66.70
Q77-1240	1 gallon	$271.00
Q77-1250	5 gallon	$1,408.00

Nu-Calgon Pan-Spray



The quick and easy-to-use product for sealing all kinds of leaks. Pan-Spray dispenses a white, waterprooof and rubberized coating that won't chip, crack, flake or peel, and it is ideal for sealing out rust and corrosion. It can be applied when the surface is wet.

Part #	Description	LIST
4296-50	16 ounce can (White)	$76.40
4296-51	16 ounce can (Black)	$76.40

INDUSTRIAL LUBRICANTS

Food-Grade Silicone



Food Grade Silicone sprays a perfect non-stick surface on ice machine surfaces, vending machines, coin slots, slicing machines, dairy machinery, and other food processing and packaging equipment. An excellent lubricant that prevents binding and sticking. Contains ingredients approved by the F.D.A. for food contact use. USDA Approved.

Part #	Description	LIST
4084-03	11 ounce can	$88.70

Loctite White Lithium Grease



A liquid aerosol lubricating paste designed to reduce friction between load bearing moving metal surfaces and/or the combination of metal and plastic surfaces. This product protects metal surfaces from corrosion.

Part #	Description	LIST
1906122	10.75 oz net wt. aerosol	$28.90

INDUSTRIAL LUBRICANTS

Loctite Moly Dry Film



A molybdenum-disulfide based solid film lubricant. It is a heavy-duty lubricant used for general plant maintenance, metal working trade, machinery manufacturers and manufacturers of military and commercial jet engines. In aerosol form, it is an easy-to-use maintenance lubricant. For continuous use in sliding friction, at temperatures from -29 to +398°C (-20 to +750°F). For anti-seize lubrication. Moly dry film functions from -29 to +1315°C (-20 to +2400°F)

Part #	Description	LIST
1786074	12 oz. aerosol	$84.20

Super Lube Synthetic Based Lube with Teflon



3oz tube. With PTFE. Lubricant contains no petroleum products, is not subject to oxidation and is effective from -10 to 500°F. Completely odorless, non-toxic, non-corrosive. Will not harm or stain plastics, paint, cloth or rubber.

Part #	Description	LIST
82325	3 oz. Super Lube	$44.00

Di-electric Grease



Conductive Grease Maximize electrical conductivity. Prevent power loss.

Part #	Description	LIST
30536	.33 oz.	$17.00

Synthetic Lubricant Grease



NLGI Grade 2, Color White, Temp Range Continuous Up to 400°F

Part #	Description	LIST
36782	14 oz. Cart	$72.50

INDUSTRIAL LUBRICANTS

Rust Buster



Quickly loosens rusted bolts, screws, shafts, piping, and all types of "frozen" connections and assemblies

Part #	Description	LIST
CR-1	Rust Buster	$16.80

Zoom Spout Oiler



All purpose oiler with a 1/4" telescoping spout. Perfect lubricant for general industrial use. Contains four ounces of finest quality carbon free, rust and oxidation inhibited lubricating oil.

Part #	Description	LIST
CO-1	Zoom Spout Oiler	$16.10

Loctite Food Grade Grease



An exceptionally fine, white lubricating grease used at temperatures from -29 to +232°C (20 to +450°F)

SPECIAL FEATURE:
- Grease lubricant for equipment in food processing plants

Part #	Size	LIST
51252	14.5 oz net wt. cartridge	$67.10

Multi-Purpose Grease



A complex grease formulated to provide exceptional protection and performance. Lubricates from -40°C to 200°C

Part #	Description	LIST
105319	400g	$30.00
4410181	400g	$20.10

INDUSTRIAL CORROSION INHIBITORS / COATINGS

Loctite Maxi-Coat



A petroleum based compound, which prevents corrosion. It gives heavy-duty, thick film protection in outdoor conditions. Maxi-Coat doesn't melt in direct sunlight and withstands salt spray as well as other severe corrosion environments.

Part #	Size	LIST
51211	12 oz. aerosol	-

Loctite Cold Galvanizing Compound



A gray, liquid aerosol compound containing 92% zinc in the dried film. Electrochemically bonds zinc to iron and steel to protect against rust and corrosion creepage. Formulated for severe conditions - highly resistant to salt corrosion and water.

Part #	Size	LIST
82039	15 oz net wt. aerosol	$37.30

V-Belt Dressing



V-Belt Dressing is specially formulated to penetrate and extend modern V-Belt life. It is specially formulated and designed to maintain V-Belt efficiency and performance under today's increasing performance requirements. It keeps belts pliable, prevents slippage and does away with squealing and chattering. USDA Approved.

Part #	Size	LIST
4086-03	16 ounce can	$82.60

Heresite Air-Dry Phenolic Coating



- For those small touch-up jobs such as Solder Joints, Fin Tube Coil touch up, Fans, Duct Work, Copper Tubing, etc.
- 1 year Shelf Life
- Protects against fumes of Dilute Acids, Dilute Alkalies, Solvents and Inorganic Salts and More
- Minimum amount of surface preparation needed
- When thoroughly aged, it produces a hard corrosion resistant film
- Recommended for mildly corrosive fumes, salt atmosphere and high humidity

Part #	Description	LIST
VR-514T-MAD	Aerosol Coating	$181.90

CLEANERS

Chisel Gasket Remover



Lifts of baked-on gaskets, gasket cements, formed-in-place gaskets, carbon deposits, dried oil, grease and paint on any type of metal in minutes. Also suitable for use on wood.

Chisel Gasket Remover is ideal for removing:

- baked on gaskets and gasket cements from any type of metal surface
- Chemical formed-in-place gaskets, including RTV

Part #	Description	LIST
79040	18 oz. net wt. aerosol can	$63.90

Multi-Purpose Glass Cleaner



An aerosol product made with an original "no streak, non-running, orange scent formula" that quickly deodorizes and cleans window film.

Part #	Description	LIST
C23319-ALL	18.75 oz. net wt. aerosol	

SMOKE TESTERS

Smoke Test



- An easy-to-use aerosol spray that simulates smoke to provide a true, functional test for smoke detectors
- Extends reach up to 6 feet, allowing testing to be done while standing safely on the floor.
- Leaves no harmful residue

Part #	Size	LIST
72105	71g	$47.00

Smoke Emitters

- Same density as surrounding air - no need to compensate for natural rise & fall of smoke
- Non toxic, leaves no visible residue
- Non explosive, chemical reaction
- Oil free smoke will not damage decorations or equipment
- Smoke emitted at a constant rate

APPLICATIONS:

- Leak testing of ductwork
- Heat-exchanges
- Air balancing
- Negative air pressure testing and much more



HT102



HT103



S210

Part #	Description	LIST
S210	Smoke Match - 20 sec 20 cubic ft., 25-pack	-
14145-ALL	Smoke Cartridge - 45 sec 150 cubic ft.	$8.70
14175-ALL	Smoke Cartridge - 90 sec 600 cubic ft.	$11.00
HT-105	Smoke Bomb - 240 sec 2500 cubic ft.	

TAPE

Cold Weather Electrical Tape

Thick black tape provides a higher dielectric strength per turn
-18°C to 80°C

Part #	Description	LIST
ELECT-TAPE	3/4" x 66'	$6.80



PVC Insulating Tape

Part #	Description	LIST
3466-1E	3/4" x 66' - Blue	$6.10
3466-3E	3/4" x 66' - Green	$6.10
3466-4E	3/4" x 66' - Orange	$6.10

Part #	Description	LIST
3466-5E	3/4" x 66' - Red	$6.10
3466-6E	3/4" x 66' - White	$6.10
3466-7E	3/4" x 66' - Yellow	$6.10



Brush-On Electrical Tape

It sticks to metal, rubber, forming a tough, flexible coating in just 5 minutes.
Coats, seals and insulates.

Part #	Description	LIST
9040-35	liquid electrical tape	$39.40



Cloth Duct Tape

High tack, excellent strength. Superior performance in sealing air handling systems. Heavy cloth content for easier tearing and additional strength.

Part #	Description	LIST
DUCT-TAPE	2" x 60 yd - silver	$28.30
223-2-BLACK (WHITE)	2" x 60 yd - black or white	$29.40



Aluminum Foil Tape

Excellent for preventing heating and cooling losses.

Part #	Description	LIST
C-441	2" x 50 yd aluminum foil tape	
361-21	Aluminum foil - No liner	



Foil Scrim Kraft Tape

Non-tearable, diamond patterned.3'.

Part #	Description	LIST
338-3-0	3" x 50 yd foil scrim kraft tape	$42.70



Insulation Joint Tape / Pipe Wrap

Part #	Description	LIST
583-01	2" x 36 yards - black	$16.10



High Temperature Flue Pipe Tape

2 mil aluminum foil high temperature tape, rated to 450°F.
For use on most flue and chimney pipe applications.

Part #	Description	LIST
3243-3	3" x 50 yd roll	-



ACETYLENE - TORCHES & ACCESSORIES

TURBOTORCH

	Part #	Description	LIST
	0386-0835 (PL-8A-DLX-B)	Acetylene self light torch - complet kit • AR-B (CGA-200) regulator • G4 Handle • PL-8A Tip • Soft Solders to 2" (50mm) •Silver Solders to 1" (30mm) • "MC" Tank Connections • AH-12 Hose • Instruction Manual	$1,134.00
	0386-0335 (X-3B)	Soft solders to 3". Silver solders to 1-1/2". Will bronze braze light to medium gauge steel. Ideally suited for person requiring flexibility in work. Kit includes: AR-B regulator, AH-12 hose, G-4 handle with adjustable valve and quick disconnect, A-3 and A-11 tips. Fits "B" tanks. (CGA-520)	$1,530.00
	0386-0336 (X-4B)	Soft solders to 3-1/2". Silver solders to 2". Will bronze braze medium to heavy gauge steel. Suited for heavier silver soldering and brazing jobs requiring hot concentrated flame. Kit includes: AR-B regulator, AH-12 hose, G-4 handle with adjustable valve and quick disconnect, A-5 and A-14 tips. Fits "B" tank. (CGA-520)	$1,588.00
	0386-0725 (AR-B) 0386-0726 (AR-MC)	Adjustable regulator contents gauge. Fits "B" (CGA-520) tank and 3/8"-24 L.H. hose nut Adjustable regulator contents gauge. Fits "MC" (CGA-200) tank and 3/8"-24 L.H. hose nut	$464.00
	0386-1090 (AH12 (12 ft)) 0386-1091 (AH24 (24 ft))	3/16" acetylene hoses with 3/8"-24 L.H. nuts. Fits G-4; AR-B and AR-MC pressure regulators	$550.00
	0386-0308-VIC (G-4)	Handle with adjustable valve and quick disconnect. Fits A-2 through A-32 acetylene tips including MSA-8 Multi-Swirl	$233.10
	0386-0500 (SA)	Snappy adapter screws into Sof-Flame or other threaded handle adapting it to accept Turbotorch tips	$418.00

ACETYLENE - TORCHES & ACCESSORIES

TURBOTORCH

	Part #	Description	LIST
	0386-0100 (A-2)	Size of flame: 3/16". For soft soldering 1/8" to 1/2", silver soldering 1/8" to 1/4". Uses 2.0 cu ft. fuel/hr	$301.00
	0386-0101-VIC (A-3)	Size of flame: 1/4". For soft soldering 1/4" to 1", silver soldering 1/8" to 1/2". Uses 3.4 cu ft. fuel/hr	$353.00
	0386-0102 (A-5)	Size of flame: 5/16". For soft soldering 3/4" to 1-1/2", silver soldering 1/4" to 3/4". Uses 5.8 cu ft. fuel/hr	$392.00
	0386-0103-VIC (A-8)	Size of flame: 3/8". For soft soldering 1" to 2", silver soldering 1/2" to 1". Uses 9.2 cu ft. fuel/hr	$409.00
	0386-0104-VIC (A-11)	Size of flame: 7/16". For soft soldering 1-1/2" to 3", silver soldering 3/4" to 1-1/2". Uses 11.0 cu ft. fuel/hr	$507.00
	0386-0105 (A-14)	Size of flame: 1/2". For soft soldering 2" to 3-1/2", silver soldering 1" to 2". Uses 14.5 cu ft. fuel/hr	$726.00
	0386-0106-VIC (A-32)	Size of flame: 3/4". For soft soldering over 4", silver soldering 1-1/2" to 4". Uses 29.5 cu ft. fuel/hr. Use with large tank only	$494.00
	0386-0365 (MSA-8)	Multi Swirl size of flame: 3/8". For soft soldering 3" silver braze to 7/8". Uses 9.2 cu ft. fuel/hr. Wide range applications with quiet operation (QUIET TIP)	$494.00

MAPP & PROPANE TORCHES

TURBOTORCH

	Part #	Description	LIST
	0386-1299 (TX500)	Self-light hand torch with two tips (TX-503 and TX-504) for propane and mapp gas	$556.00
	0386-1293 (TX504)	Extreme Self Lighting Torch	$503.00
	0386-0403 (STK-9)	Dual gas kit contains STK-R pressure regulator & ST-3 large tip	$365.00

ACETYLENE - SOFT-FLAME

	Part #	Description	LIST
	0386-0090 (WSF-4)	Soft solders to 1". Kit includes: AR-B regulator, WA-400 handle, W-4 tip. AH-12 hose. Fits "B" cylinder (CGA-520)	$673.00
	0386-0112-VIC (S-3)	Soft solders to 1/2". Operates at 2-10 psi. Uses 1.3-2.8 scfh	$106.00
	0386-0113 (S-4)	Soft solders to 1". Operates at 2-10 psi. Uses 3.3-7.2 scfh	$118.60
	0386-0114-VIC (S-5)	Soft solders to 1-1/2". Operates at 2-10 psi. Uses 5.1-11.1 scfh	$139.70
	0386-0115 (S-6)	Soft solders to 4". Operates at 2-10 psi. Uses 6.7-14.4 scfh	$171.10
	0386-0410 (WA-400)	Rear valve handle "A" 3/8" - 24 L.H. connection fits W-3 thru W-6 Sof-Flame tips and other industry standard tips	$249.20

ACCESSORIES / SPARE PARTS

TURBOTORCH

	Part #	Description	LIST
	0386-1226	Key wrench for "B" and "MC" tank	$20.40
	0386-0505 (MC-T)	Adapter to connect acetylene "B" (CGA-520) regulator to "MC" (CGA-200) acetylene cylinder	$273.70
	0386-0503 (BTMCR)	Adapter to connect "MC" (CGA-200) regulator to a "B" (CGA-520) cylinder	$207.50
	0386-1200 (AG-1)	Fuel gauge for acetylene regulator	$214.60
	0384-0947	Portable Tote Torch Kit (Less Tank)	$1,785.00
	1423-0024	F-1 Lighter Flints	$16.40
	1423-0061	L-1 Round File Spark Lighter	$18.60

OXY-ACETYLENE PORTABLE TOTE TURBOTORCH



Key Applications:

- HVAC
- REFRIGERATION
- MAINTENANCE AND REPAIR

- **Oxygen & Acetylene or Acetylene only (tip + adaptor provided)**

— *With Tank*

Part #	LIST
0384-0958	$4,756.00

— *Without Tank*

Part #	LIST
0384-0957	$3,277.00

Includes:

Oxygen Regulator, Fuel Regulator, Handle, Cutting Attachment, Cutting Tip, Multiple Brazing Nozzles, Air Fuel Tip, Glasses, Striker, Hose (12.5', "Dual", A 3/16" size), Tank Key*, Adapter, Check Valves, Tote Case, Oxygen Cylinder*(Type "R" 20 cu. ft), Fuel Cylinder*(Type "MC" 10 cu. ft)

* Not included in TTV-J-ACP

*****Tank contents not included in price.**

TANK TOTES



Turbo Tote Only For "MC" & R Cylinders

Part #	LIST
1421-0084	$271.50



Fits "B" tank

Part #	LIST
1421-0016(TT-150B)	$352.00



Heavy duty steel construction fits "MC" tank or MT-1 MAPP tank. Easy storage of tips, handle, hose and striker.

Part #	LIST
1421-0035 (TT-MC)	$494.00



Heavy duty steel construction fits "B" tank. Storage for tips, hose, handle and striker.

Part #	LIST
1421-0034 (TT-B)	$494.00

NITROGEN PURGING

Nitrogen Purge Kit



- A complete kit to pressure check and purge lines before brazing
- Includes nitrogen regulator, turbo tornado, 1/2" cone plug, 3/4" cone plug, needle tip, CO2 adapter, 36" x 1/4" hose, 72" x 1/4" hose and blow gun

Part #	Description	LIST
0386-1370	Nitrogen Purge Kit	$1,426.00

Nitrogen Regulator



- Forged brass body with easy to read 2" gauges
- 1/4" flare outlet fittings accept standard refrigeration hoses
- CGA-580 insert gas inlet connection fits all nitrogen tanks
- Gauge content: 4,000 PSIG, 800 PSIG delivery

Part #	Description	LIST
0386-0857	Nitrogen Regulator	$599.00
0781-3652	Nitrogen Pressure Flow Regulator	$698.00

Nitrogen Flowmeter



- Low-pressure nitrogen gas must be flowing through the copper lines when brazing to eliminate scale and oxidation that can cause blockage in a system
- A nitrogen flowmeter has a float ball that rises in the flowmeter tube indicating low-pressure flow of nitrogen when purging copper lines during the brazing process
- 1/4" flare outlet connection; attaches directly to any nitrogen regulator with a 1/4" male flare outlet fitting

Part #	Description	LIST
0386-0849	Nitrogen Flowmeter	$302.00

Braze-Rite Adapter



- Quickly connects to manifold gauge hose and slips easily and securely into pipe
- Allows for bleed of nitrogen through pipe being brazed to keep pipes clean and oxide-free
- Stepped to fit 3/8", 1/2", 5/8", 3/4", 7/8" amd 1-1/8" pipe

Part #	Description	LIST
BRZ1000	Braze-Rite Adapter	$135.90

NITROGEN PURGING
DIVERSITECH

Drain Kat™ Mini Kit

The Drain Kat™ is refillable, nitrogen or CO2 mini drain cleaning kit. Featuring a small cylinder that holds 9 cubic feet of nitrogen or 2-1/2 pounds of CO2. The cylinder includes an integral mounted regulator for quick and easy adjustments of discharge pressure. Get exactly the amount of pressure you need with a quick adjustment on the regulator.



Part #	Description	LIST
MBK-6	Drain Kat™ mini kit for nitrogen or CO2 and accessory fitting kit	$1,943.00

Drain Gun™

Clears condensate drains with a SWOOSH! A portable tool designed to blow out drain lines instantly. Equipped with a tapered fitting to work on 3/8 in. - 3/4 in. drain openings.



GG-1



GGC-12

Part #	Description	LIST
GG-1	Drain Gun	$206.70
GGC-12	Drain Gun Cartridges (Pack of 12)	$81.60

REGULATORS

CO2 Regulators



Part #	CGA Inlet	Outlet Connection	Gauge(s)	Gauge(s) Delivery	Delivery PSIG	Gas Type	LIST
R1363	CGA320	1/4” SAE Flare (M)	Dual (1-1/2″)	G84D: 300 / G82D: 4000	5-175	CO2	$330.00

SOLDERING GASES & AIDS

Acetylene, Propane, Oxygen, Nitrogen and CO2

Gas	Capacity
B-CONTENTS	40 cu. ft.
MC-CONTENTS	10 cu. ft.
R-CONTENTS	20 cu. ft.
PT-1 PROPANE	throw away cylinder
MPT-1 MAPP	throw away cylinder
N88-CONTENTS	Nitrogen 88 cu. ft.
CO2-CONTENTS	20 cu. ft.



MC Tank



B Tank



MAPP



PROPANE

SOLDERING - BRAZING & FLUX

HARRIS

A LINCOLN ELECTRIC COMPANY

Sil-Fos



Part No.	Case Size	Descriptions	UOM
15620R	25	SS15-1/8 DIA X 20 X 25# PKG	LB
5520R1	25	SS5 3/32 DIA X 24 STICK TUBE	Each
5620R1	25	SS5 1/8 DIA X 14 STICK TUBE	Each
15520R1	25	SS15 3/32 DIA X 24 STICK TUBE	Each
1520FMPOP	16	SS15-050 X 1/8 X Minni-pak 7 stick POP	Each
1520FMPOP	16	SS15-050 X 1/8 X Minni-pak 7 stick POP	Each
1520FMPOP	16	SS15-050 X 1/8 X Mini-pak 7 stick POP	Each
505061	50	50/50 SOLDER 1/8 DIA X 1# SPOOL	LB
331756	50	PREMIUM SILVER .118 X 1 LB SPL X 50 LB	LB
95561	50	95/5 SOLDER 1/8 DIA X 1# SPOOL	LB
604061	50	60/40 SOLDER 1/8 X 1# SPOOL	LB
SCPF4	24	STAY CLEAN PASTE FLUX 4OZ JAR	Each
0620R1	25	Harris 0 1/8 DIA X 14 STICK TUBE	Each
SB61	12	STAY BRITE 1/8 X 1# SPOOL	LB
BRGT61	50	STAY SAFE BRIDGIT 1/8 X 1# SPOOL	LB
SCLF4	48	STAY CLEAN LIQUID FLUX 4OZ BOTTLE	Each
SCLF16	24	STAY CLEAN LIQUID FLUX 16OZ BOTTLE	Each
SSWF7	24	STAY SILV WHITE FLUX 6.5 OZ JAR	Each
SSBF1	12	STAY SILV BLACK FLUX 1# JAR	Each
45T31	25	SF45T 1/16 X 1 TO PKG	Each
5631	25	SF56 1/16 X 1 TO PKG	Each
50N31	25	SF50N 1/16 X 1 TO PKG	Each
45TF3184	25	SF45TFC 1/16 X 18 X 9 Stick Tube	Each
RF15250	4	SS15 1/4 Joint Ring x 25 PKG	Each
RF15375	4	SS15 3/8 Joint X 25 PKG	Each
RF15500	4	SS15 1/2 Joint Ring x 25 PKG	Each
RF15625	4	SS15 5/8 Joint Ring x 25 PKG	Each
RF15750	4	SS15 3/4 Joint Ring x 25 PKG	Each
RF15875	4	SS15 7/8 Joint Ring x 25 PKG	Each
50NCW07520POP	16	SF50NCW .075 x 20 x 10 STK TUBE	Each
38TCW06220POP	16	SF38TCW .062 x 20 X 8 STK TUBE	Each
56CW07520POP		SF56CW .075 x 20 x 8 STICK TUBE POP	
15520R	25	SS15-3/32 DIA X 20 X 25# PKG	LB
15536R	25	SS15 3/32 Dia x 36 x 25lb PKG	LB
15520R	25	SS15 3/32 DIA X 20 X 25# PKG	LB
45T350	50	SF45T 1/16 X 50 TO COIL	Troy Ounce

SOLDERING - BRAZING & FLUX

50/50 - 60/40 Wire Solder

These tin/lead solders can join copper and most copper alloys, lead, nickel alloys and steel. Tin/lead solders are not recommended for joints subject to high stress or vibration in the cooling industry due to lack of sufficient elongation properties.

Part #	Chemical make up %	Melting Range		Size	LIST
		Solidus F/C	Liquidus F/C		
53137	TIN-50 LEAD-50	360/182	420/216	1 lb	$75.20

Note: it is illegal to use lead solders in both public and private potable water systems.

95/5 Wire Solder

Tin/antimony solder are well-suited for applications where moderately elevated temperature is a factor. With higher electrical conductivity and high fluidity, 95/5 is recommended for lead-free installations of small-diameter, tight-fitting connections. Not recommended for use on brass.

Part #	Chemical make up %	Melting Range		LIST
		Solidus F/C	Liquidus F/C	
57263	TIN-95 ANTIMONY-5	452/233	464/240	$66.10

SOLDERING TOOLS

Refrigeration Wire Brushes

Part #	Description	LIST
924	1/4" OD	$20.80
925	3/8" OD	$20.70
926	1/2" OD	$16.70
927	5/8" OD	$17.30
928	3/4" OD	$31.20
929	7/8" OD	$31.70

Part #	Description	LIST
931	1-1/8" OD	$45.20
932	1-3/8" OD	$23.20
934	1-5/8" OD	$32.60
935	2-1/8" OD	$45.90
78819-MAR	1/2 & 3/4 two-in-one brush	$96.80
78820-MAR	5/8 & 7/8 two-in-one brush	$99.50



Cleaning Abrasive Cloth & Pads

Part #	Description	LIST
WP10A	waterproof sandcloth 1-1/2" x 10 yd – Blue Jean Backing	-
JA010	waterproof sandcloth 1-1/2" x 10 yd	-
JA025	waterproof sandcloth 1-1/2" x 25 yd	-
OM5	open mesh cloth 1-1/2" x 5 yd	-
OM25	open mesh cloth 1-1/2" x 25 yd	$121.60
SP10	abrasive pad 10/pk 2" x 6"	$16.80
SP60	abrasive pad 10/pk 6" x 9"	$21.80







SOLDERING - BRAZING & FLUX

Bronze Flow



A bronze brazing alloy used for joining of steel to steel or cast iron. Repairs to steel pipe, leaking pipe fittings. Brazing of steel to copper or brass.

Part #	Chemical make up %	Melting Range		Size	LIST
		Solidus F/C	Liquidus F/C		
BF-1	CU-59 ZN-39	1595	1620	1 lb	-

Wildon Channel Flux

ChannelFlux ZA-1 Repair Kit



ZA-1

Part #	Description	LIST
ZA-1	Channel Flux Repair Kit	$72.20

Liquid Soldering Flux

For virtually all metals other than aluminum, magnesium or titanium.



Part #	Description	LIST
97000	4 oz spout cap liquid	$11.80
97001	16 oz - pint liquid	$52.40

White Brazing Flux

For use with silver brazing alloys on all metals other than aluminum, magnesium or titanium. Effective to 1600°F



Part #	Description	LIST
SSWF7	7 oz brushcap	$12.80

Bridgit - Flux Paste



Burn-resistant paste flux for use with Bridgit and most common wire solders. Stays active to 800°F, will not burn, thus reducing black carbon formation that can cause voids and leaks.

Part #	Description	LIST
BRPF4-HPG	4 oz brushcap	$11.60

Acid Brushes



Acid brushes are ideal for thread sealant, flux and paste solders.

Part #	Description	LIST
C33804	small (1/4" wide), 12/pk	$16.70
C33808	medium (1/2" wide), 10/pk	$16.70

SOLDERING AIDS

Thermo-Trap

The industry's original heat absorbing paste designed to isolate heat encountered in soldering, welding, and brazing, thereby preventing damage to nearby heat sensitive controls, or fittings. USDA approved. Biodegradable. Available in paste as well as gel.





Part #	Description	LIST
4371-36	11 oz. tube (Paste)	$48.50
4371-32	1 quart spray bottle	$76.20
4371-53	4 fluid ounce spray bottle	

Hot Dam

Stop heat transfer on any metal surface. Whether it is hot or cold the reusable Hot Dam protects valve seats, fittings, etc. Easily molds to any shape without drip or residue, and when the job is done it is easy to remove and reuse over and over.



Part #	LIST
9000-WMI	-$95.50

Flame-Gard

Flame-Gard is made from extra heavy duty, premium grade material that provides superior surface protection against heat/flame damage when soldering and brazing in confined areas. Heavy-gauge aluminum backing allows shaping for a specific contour.

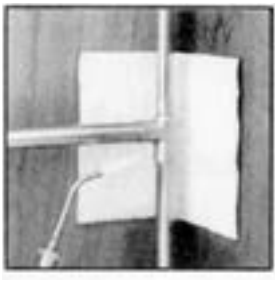

Part #	LIST
FLAME-GARD912	$59.70

Premium Heat Shield

- Durable fabric (8" x 12")
- Re-useable
- Center-cut design
- No toxic smoke, made of non-asbestos, noncermic materials



Part #	LIST
0386-0561	$222.20

FLASHLIGHTS

Milwaukee Flashlights

M18™ LED Flood Light
- 18V
- 1000 lumens



Part #	LIST
2361-20	$388.00

M12™ LED Work Light
- 12V



Part #	LIST
49-24-0146	$153.60

M18™ LED Work Light
- 18V



Part #	LIST
2735-20	$225.40

M12™ LED Work Light
- 12V



Part #	LIST
2363-20	$324.00

M12™ LED Stick Light (Bare Tool)
- 12V



Part #	LIST
2351-20	$197.10

TRUEVIEW™ M18™ LED HP Flood Light
- 18V



Part #	LIST
2352-20	$218.60

M12™ LED Lantern/ Flood Light
- 12V



Part #	LIST
2362-20	$242.10

ALLTEMP Flashlights

Pivoting Mini Flashlight
- 18 LED face
- 3 LED top



Part #	LIST
111115	

Clipstrip™ Pocket Camo LED Light
- 140 LUMENS



Part #	LIST
111116	

Pivot LED Front Work Light
- 240 Lumens



Part #	LIST
111114	$94.40

FLASHLIGHTS & BATTERIES

Fenix E20 V2.0 AA Flashlight

At only 5” long, this flashlight is a perfect everyday carry size. The Fenix E20 V2.0 also features a patented ultra-thin optical lens with an automobile coating which reduces weight and allows for clearer vision.

- (2) AA Batteries
- 350 Lumens Maximum
- Tail Switch
- 4 Brightness Levels



Part #	LIST
E20V2.0	$146.70

Fenix LD22 LED Flashlight

- Anti-roll, slip-resistant body design made of durable aircraft-grade aluminum
- Utilizes a Cree XP-G2(R5) LED with a lifespan of 50,000 hours.
- Powered by 2, AA (Ni-MH/Alkaline) batteries.
- 300 Lumens Maximum



Part #	LIST
LD22	$166.70

Duracell Pocket /Thermometer Batteries

Part #	LIST
D303/357BPK	$8.10
D384/392BPK	$5.10
D309/393BPK	$7.80
DL2025BPK	$7.70
DL2032BPK	$7.80



Duracell Industrial Alkaline Batteries



Part #	Description	LIST
PC1300	D cell 1.5V	$10.20
PC1400	C cell 1.5V	$43.90
PC1500	AA 1.5V	$36.30
PC2400	AAA 1.5V	$17.20
QU1604	9V	$19.20
PL123	3V	$28.30
1209	6V lantern spring terminal	$15.00

Rayovac-Pro Alkaline Batteries



Part #	Description	LIST
AL-AAA-8	AAA Batteries 8/PK	$10.20
AL-AAA-18F	AAA Batteries 18/PK	$43.90
AL-AA-24F	AAA Batteries 24/PK	$36.30
AL-C-6	C Batteries 6/PK	$17.20
AL-D-6	D Batteries 6/PK	$19.20
AL-9V-6	9V Batteries 6/PK	$28.30

TOOLS

Magnetic Retrieving Tool

Part #	Description	LIST
2593	Tool - Pocket Telescopic extends from 5-7/8" to 25-9/16"	$22.80



Telescopic Inspection Mirror

Part #	Description	LIST
M-1-ALL	1-1/4" circular - extends 6-1/4" to 18-1/4"	$25.90
M-2-ALL	2-1/4" circular - extends 10" to 14"	$36.60
M-3-ALL	2-1/8" x 3-1/2" rectangular - extends 11-1/4" to 15-1/4"	$43.20
M-3R-ALL	Replacement head for M-3	



Single Flint Striker



Part #	LIST
1423-0061	$18.60

Triple Flint Lighter



Part #	LIST
0386-0297	$74.20

Flexible BBQ Lighter

Flexible Stem. Indoor and outdoor use. Windproof frame. Refillable.



Part #	LIST
185001	

Bernzomatic Flexible Utility Lighter

The lighter features an adjustable windproof flame for indoor and outdoor use, and a comfortable ergonomic design for easy grip. Includes a large window to easily gauge fuel levels and can be easily refilled with a Bernzomatic 5.5 oz. butane cylinder.



Part #	LIST
328643	-

FORM HOLDERS

SAUNDERS



A-HOLDER

Keeps Forms and Information Safe & Sound

Part #	LIST
10017-SND	$14.50



REDI-RITE

Portable Writing Surface & Storage Clipboard

Part #	LIST
11017-SND	$111.80



TUFF WRITER

Opens Like A Book

Part #	LIST
45300	$122.50



SNAPAK

Portfolio Style Storage System for Maximum Versatility

Part #	LIST
SN8512-SND	$117.80

TOOL TOTES

VETO PRO PAC

TECH LC



A number of changeshave been made to tailor the bag to accommodate HVAC service technicians tools and work routines.

Part #	L x W x H	LIST
TECH-LC	13.5"x9.5"x19"	$825.00

LC



57 pockets capable of handling 75 hand tools.

Part #	L x W x H	LIST
LC	13.5"x9.5"x12"	-

MC



- 20 interior and exterior pockets
- 2 large and 5 small D-Rings
- Meters and compact cordless drill/ driver compartment

Part #	L x W x H	LIST
MC	10”X8”X12.5”	-

LT



The LT is a rugged laptop bag designed to organize and store a laptop and other business accessories on the jobsite.
- Holds Laptop

Part #	L x W x H	LIST
TECH-LT	16.5"x7"x15"	$1,081.00

XLT



The XLT is a rugged laptop/tool bag designed to organize and store a laptop, business accessories and hand tools in the field.
- Holds Laptop

Part #	L x W x H	LIST
XLT	16.5"x9.5"x20.25"	-

TECH-XL



- 80 interior and exterior pockets
- 4 large and 5 small D-Rings
- Holds Laptop

Part #	L x W x H	LIST
TECH-XL	16.5”x 9.5”x 20.75”	$918.00

XL



Handle100 hand tools.67 pockets

Part #	L x W x H	LIST
XL	16.5"x9.5"x14"	-

XXL-F



Part #	L x W x H	LIST
XXL-F	25.5"x9.5"x17"	$944.00

OT-LC



A compact top-in loading .

Part #	L x W x H	LIST
OT-LC	13.5"x9.5"x12"	$865.00

TOOL TOTES

VETO PRO PAC

MB

The MB is a clip-on me to hold a small selectio of tools and one or two meters. When not in use it can clip onto any model Veto bags tape clip or D-Rings.



Part #	L x W x H	LIST
MB	8"x3"x9"	-

TP3

The TP3 is a clip-on diagnostics bag which holds a meter and a variety of tools. It clip's onto any model Veto tool bag's tape clip or D-Rings.



Part #	L x W x H	LIST
TP3	5.5"x4.75"x9.5"	$252.00

TP4

4 pocket Tool Pouch, the big brother of the TP3

- 20 interior and exterior pockets



Part #	L x W x H	LIST
TP4	4.75"x7"x9.5"	$299.30

Tool Backpacks

Veto Tech Pac



With 56 pockets inside and out, the Tech Pac has ample room for hand tools, meters, parts boxes, cordless drills and impact drivers.

Part #	L x W x H	LIST
TECH-PAC-1	14.25" x 9.875" x18.125"	$1,195.00

Milwaukee Contractor Bag



- Tough, water resistant 600 denier material
- Durable zipper closure
- Shoulder strap or dual handle straps for easy carrying
- Ideal for tool and accessory storage

Part #	L x W x H	LIST
48-55-3490	17" x 9" x10"	$71.70

Milwaukee Jobsite Backpack





- 35 Pockets for organizing tools
- Impact Resistant Molded Base
- 1680 Ballistic Material
- Laptop Sleeve - Holds Laptops up to 15.6"
- 48 Total pockets 2 External pockets
- Impact resistant base
- 1680D ballistic material
- 2x more padding

Part #	L x W x H	LIST
48-22-8200-MIL	10"x16"x20"	$306.00
48-22-8201-MIL	9.44"x18"x20.4"	$441.00

KLEIN

Tradesman Pro™ Organizers



8-inch Tote

Part #	LIST
554158-14	$236.10



10-inch Tote

Part #	LIST
5541610-14	$298.80



Shoulder Pouch

Part #	LIST
55419SP-14	$174.20

PLIERS / STRIPPERS / CUTTERS / CRIMPERS

Klein High Leverage NE Type Side Cutters

Part #	Length	LIST
D213-9NE	9-1/4	$149.70



Klein High Leverage Diagonal Cutters with Angled Head

Part #	Length	LIST
D248-8	8	$99.80



Klein High Leverage Diagonal Cutters

Part #	Length	LIST
D228-8	8	$99.80



Klein Midget Standard Diagonal Cutters with Tapered Nose

Part #	Length	LIST
D245-5	5	$114.80



Klein High Leverage Diagonal Cutters with Tapered Nose

Part #	Length	LIST
D220-7	7-11/16	$114.80



Klein Standard Long-Nose

Part #	Length	LIST
D301-6C	6-5/8	$89.80



Klein Midget Tapered-Nose Diagonal Cutters with Midget Jaw

Part #	Length	LIST
D295-4C	4-3/16	$139.80



Klein Pump Pliers

Part #	Length	LIST
D502-10	10"	$89.80
D502-12	12"	$109.80



Klein Standard Long-Nose with Side Cutters

Part #	Length	LIST
D203-6	6-5/8	$89.80
D203-7	7-1/8	$89.80
D203-8	8-5/16	$112.30



Klein Wire Strippers-Cutters

Part #	Length	LIST
11055	7-1/8"	$74.20
11057	7-1/8"	$79.80



KNIPEX Hightech Water Pumps Pliers

Part #	Length	LIST
87-01-250-SBA	10"	$134.10
87-01-300-SBA	12"	$185.70



Klein Multi-Purpose Wire Stripper-Cutter

Part #	Length	LIST
1011	6"	$49.80



Klein Automatic Wire Stripper

Part #	Description	LIST
11063W	Cuts and strips 8-22 AWG wire	$107.20



Klein Long-Nose All Purpose Tool

Part #	Length	LIST
1010	8-1/4"	$87.30



Klein Crimper for Insulated and Non-Insulated Terminals & Connectors

Part #	Length	LIST
1005	9-3/4"	$107.30



Klein All-Purpose Electrician's Tool

Part #	Length	LIST
1001	8-3/4"	$99.80



KLEIN TOOLS

Klein Ratcheting Crimper

- Crimps insulated terminals onto 10-22 AWG stranded copper wire
- Adjustable compound action design puts more crimping power into each squeeze



Part #	Length	LIST
3005CR	9"	$87.30

Klein Forged Steel Wire Crimper, Cutter, Stripper

- Includes a dedicated crimper with a wire stripper and two cutters
- Strips 10-18 AWG stranded wire
- Crimps 10-22 AWG insulated and non-insulated terminals and connectors



Part #	Length	LIST
2005N	9"	$115.60

Klein Portable Rechargeable Battery

- 10050 mAh capacity battery; up to 18W of total power
- USB Type-A with high speed charging powered by Qualcomm® Quick Charge™ 3.0 Technology
- USB Type-C with Input and Output capable of up to 15watts



Part #	Length	LIST
KTB1	2.5"	$135.10

Klein Rechargeable Personal Worklight

- Versatile Rechargeable Personal Worklight stands, hooks, hangs, and mounts magnetically
- High: 460 Lumens for 9 hours / Low: 175 Lumens for 16 hours
- Able to charge smartphones and other small devices via USB-A



Part #	Length	LIST
56403	2.07"	$161.40

Klein 8-in-1 Insulated Interchangeable Screwdriver Set

- Interchangeable Insulated Screwdriver Set with an insulated handle, 5 interchangeable insulated blades, and a carrying pouch
- Includes tip sizes: two #2 Phillips, two 1/4-Inch Slotted, one #1 Phillips, one #1 Square, one #2 Square, and one 3/16-Inch Slotted
- Securely and easily release the blade with a quick twist of the lock collar



Part #	Length	LIST
32288	3.5"	$161.40

HAND TOOLS

MILWAUKEE

FASTBACK™ UTILITY KNIFE
48-22-1901



LIST
$30.80

11-IN-1 SCREW DRIVER W/ SQUARE BIT
48-22-2761



LIST
$34.00

6 in 1 WIRE PLIER GEN II
48-22-3079



LIST
$94.30

9" LINESMAN PLIER
48-22-6100



LIST
$81.50

10" STRAIGHT-JAW PLIER
48-22-6310



LIST
$48.60

10" V-JAW PLIERS
48-22-6210



LIST
$59.70

LEFT CUTTING SHEARS
48-22-4510



LIST
$40.20

UPRIGHT RIGHT CUTTING SHEARS
48-22-4521



LIST
$71.70

RIGHT CUTTING PLIERS
48-22-4520



LIST
$40.20

STRAIGHT CUTTING SHEARS
48-22-4530



LIST
$40.20

TUBBING CUTTER
48-22-4204



LIST
$72.30

VOLTAGE TESTER LED LITE, AUDIBLE
2202-20



LIST
$56.60

BULLDOG SHEARS
48-22-4500



LIST
$49.40

PACKOUT™ LARGE TOOL BOX
48-22-8425



LIST
$255.00

PACKOUT™ ROLLING TOOL BOX
48-22-8426



LIST
$390.00

PACKOUT™ ORGANIZER
48-22-8430



LIST
$160.70

PACKOUT™ COMPACT ORGANIZER
48-22-8435



LIST
$111.10

WRENCHES

Reversible Gear Ratcheting Wrench

This 15° offset ratcheting wrench with a compact head design. The small lever switches direction without sacrificing the overall compact head design.



Part #	Description	LIST
9533N	Rev. ratcheting wrench, SAE, 8 pc. set	$340.00
9620N-AXT	Rev. ratcheting wrench, metric, 12 pc. set	$494.00

Flex Head GearWrench Ratcheting Wrench

With a 180° tilt, this GearWrench can reach into the tightest places.



Part #	Description	LIST
9700-AXT	SAE, 7 piece set - 3/8", 7/16", 1/2", 9/16", 5/8", 11/16", 3/4"	$277.90

Combination Wrenches



Part #	Size	Length	Box End	LIST
CW-1/4-TOO	1/4	3-15/16	6 Point	$5.20
CW-5/16-TOO	5/16	4-3/4		$5.90
CW-3/8-TOO	3/8	5-1/4		$6.20'
CW-7/16-TOO	7/16	5-13/16		$6.60
CW-1/2-TOO	1/2	6-1/2	12 Point	$7.70
CW-9/16-TOO	9/16	7-3/16		$8.30
CW-5/8-TOO	5/8	8		$8.90
CW-3/4-TOO	3/4	9-5/8		$11.30
CW-13/16-TOO	13/16	10-9/16		$13.00

Torque Wrench

Ensures accurate tightness of fittings, especially R410A. Kit in a blow molded case includes sizes: 17, 22, 24, 26, 27 and 29mm.



Part #	LIST
70078	$259.70

R110 REED Hex Wrench

This hex wrench works for hex-shaped fittings without damage from teeth.



Part #	LIST
R110	$165.70

Milwaukee Aluminum Pipe Wrench



Part #	Size (in.)	Pipe Capacity (in.)	LIST
48-22-7210	10	1-1/2	$126.60
48-22-7212	12	2	$141.00
48-22-7214	14	2	$156.50
48-22-7218	18	2-1/2	$204.50
48-22-7224	24	3	$317.00

Imported Aluminum Pipe Wrench



Part #	Description	LIST
70013	14"	$110.70
70014	18"	$141.10
70015	24"	$217.60

Adjustable -Extra-Capacity Design Plastic-Dipped Handles



Part #	Length	Capacity	LIST
D507-6	6"	15/16"	$94.80
D507-8	8"	1-1/8"	$99.80
D507-10	10"	1-5/16"	$124.70
D507-12	12"	1-1/2"	$184.70

WRENCHES

Fully-Reversible Ratcheting Offset Box Wrenches

Part #	Description	LIST
68234	1/4 " x 5/16"	$52.40
68236	3/8" x 7/16"	$56.10
68238	1/2" x 9/16"	$71.10



Hex Key Adapter

Part #	Description	LIST
T2-HKA	3/16" and 5/16"	$37.90



Fully-Reversible Ratcheting Refrigeration Wrenches

Part #	Socket Sizes	LIST
68309-KLE	3/16" & 1/4" sq. x 1/2" & 9/16" hex	$81.10
68310-KLE	3/16" & 5/16" sq. x 1/4" & 3/8" sq.	$62.40



Imperial Ratcheting Wrench

Part #	Description	LIST
127C-ALL	1/4", 3/8", 3/16" & 5/16"	$44.30



QuadBox™ Ratcheting Wrench SAE

Part #	Description	LIST
85201-AXT	5/16" x 3/8" & 7/16" x 1/2"	
85202	9/16" x 5/8" & 11/16" x 3/4"	



Service Wrench

Part #	Description	LIST
T21125U	3/8" square end and 1/2" square end	$76.70



HEX-KEY WRENCHES

Part #	Description	LIST
10937	13 pc. set (.050 - 3/8") ball drive	$65.10
69637	13 pc. set (.050 - 3/8") ball drive - extra long	$96.50



Part #	Description	LIST
10995	9 pc. set (1.5 - 10mm) ball drive	$88.80



Part #	Description	LIST
12137	13 pc. set (.050 - 3/8")	$37.40



Part #	Description	LIST
12132	8 pc. set (.050 - 5/32")	$16.80
12199	9 pc. set (1.5mm - 10mm)	$35.40



Part #	Description	LIST
15390	10 pc. set (3/32 - 3/8") w/stand	$249.20



Part #	Description	LIST
15305	3/32" Hex 9" T-Handle	$16.30
15306	7/64" Hex 9" T-Handle	$17.40
15307	1/8" Hex 9" T-Handle	$18.40
15308	9/64" Hex 9" T-Handle	$18.90
15309	5/32" Hex 9" T-Handle	$21.80
15310	3/16" Hex 9" T-Handle	$22.30
15311	7/32" Hex 9" T-Handle	$23.50
15312	1/4" Hex 9" T-Handle	$27.00
15313	5/16" Hex 9" T-Handle	$35.10

Part #	Description	LIST
12585	5 pc. hex set (3/16 - 3/8")	$36.40



Part #	Description	LIST
12587	7 pc. hex set (2 - 8mm)	$28.00



Part #	Description	LIST
12589	9 pc. hex set (5/64 - 1/4")	$25.20

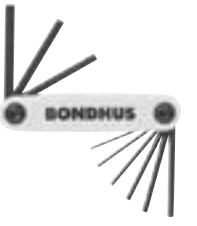

Part #	Description	LIST
12591	9 pc. hex set (.050 - 3/16")	$20.50



Part #	Description	LIST
12592	7 pc. hex set (1.5 - 6mm)	$20.20

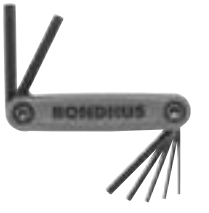

Part #	Description	LIST
12632	8 pc. star set (T6 - T25)	$45.30



Part #	Description	LIST
12634	8 pc. star set (T9 - T40)	$49.90



Part #	Description	LIST
70550	Folding Hex Key Set11 Fractional Inch-Sized Keys	$55.90



TAPE MEASURES

Milwaukee Magnetic Tape Measures









Part #	Description	LIST
48-22-0316	16' Magnetic Tape Measure	$53.30
48-22-0317	5M/16' Magnetic Tape Measure	$53.30
48-22-0325	25 Magnetic Tape Measure	$62.90
48-22-0326	25 Magnetic Tape Measure	$62.90
48-22-0326	8M/26' Magnetic Tape Measure	$62.90

Compact Billet Torpedo Level

The Milwaukee Billet Torpedo level features AMPLIFIED RARE EARTH MAGNETS for over 2X the holding power of leading competitors. The MAXIMIZED VIEWING AREA ensures that the user can make a fast and accurate readings of 1/8" and 1/4" per foot in any position.



Part #	LIST
48-22-5107	$107.30

SCREWDRIVERS

Klein Heavy-Duty Round-Shank, Keystone-Tip



Part #	Shank Tip Width x Shank Length	LIST
602-3	7/32 x 3	$33.60
602-4	1/4 x 4	$34.90
602-6	5/16 x 6	$44.90
602-8	3/8 x 8	$57.40
602-10	3/8 x 10	$67.70

Klein Round Shank, Cabinet-Tip



Part #	Shank Tip Width x Shank Length	LIST
601-4	3/16 x 4	$29.90
601-6	3/16 x 6	$62.10
601-8	3/16 x 8	$63.60
601-10	3/16 x 10	$39.90

Klein Round Shank, Square-Recess Tip



Part #	Shank	Point Size	Colour Code	For Screw Sizes	LIST
660	4"	No. 0	Yellow	3 & 4	$32.50
661	4"	No. 1	Green	5,6,7	$32.40
662	4"	No. 2	Red	8,9,10	$32.40
663	4"	No. 3	Black	12 & 14	$32.50
668	8"	No. 1	Green	5,6,7	$26.10
666	8"	No. 2	Red	8,9,10	$37.60
667	8"	No. 3	Black	12 & 14	$36.40

Klein Multi Bit Screwdrivers



Part #	Point Size	LIST
32527	11-in-1 Screwdriver/Nut Driver - Schrader	$67.70
32535	10-Fold 10-in-1 Screwdriver/Nut Driver	$105.10

Hilmor Multi Bit Screwdriver



Part #	Point Size	LIST
1839053	9 IN 1 Multi-Tool	$71.60

Klein Heavy-Duty Round-Shank, Cabinet-Tip



Part #	Shank Tip Width x Shank Length	LIST
605-4	1/4 x 4	$32.50
605-6	1/4 X 6	$35.00
605-8	1/4 x 8	$41.20

Klein Round Shank, Special Profilated Phillips-Tip



Part #	Point Size	Shank Length	LIST
603-1	No. 2	1-1/2	$27.60
603-3	No. 1	3	$28.60
603-4	No. 2	4	$32.40
603-10	No. 2	10	$42.60

Klein Pocket Screwdrivers



Part #	Description	LIST
32613	3-in-1 HVAC Pocket Screwdriver	$48.80
32614	4-in-1 Electronics Pocket Screwdriver	$47.90

Milwaukee Multi Bit Screwdrivers



Part #	Point Size	LIST
48-22-2761	11in1 Screwdriver SQ	$34.00
48-22-2132	9-in-1 Square Drive Multi-bit Driver	$47.10
48-22-2133	9-in-1 Torx Drive Multi-Bit Screwdriver	$49.50
48-22-2134	9-in-1 SAE Hex/Key Drive Multi-Bit Screwdriver	$49.50
48-22-2322	9-in-1 Square Drive Ratcheting Multi-Bit Screwdriver	$61.30

Picquic Multi Bit Screwdrivers



Part #	Point Size	LIST
98880	8 IN 1 including 1/4 & 5/16 Nut Driver	$51.40
91002	Multi Bit Stubby	$30.80

Tamperproof Multidriver



Part #	Point Size	LIST
151TP	15 IN 1 Tamperproof Multidriver	$107.80

NUT DRIVERS

7 PC Magnetic HollowCore™ SAE Nut Driver Set



HollowCore™ Unlimited Depth - Ideal for long bolts or threaded rod applications

Part #	Description	LIST
48-22-2507	7 PC Magnetic Nut Driver Set	$191.80

2 Piece Magnetic Tip Nut Driver Sets



Part #	Description	LIST
630M	Set contains: 630-1/4M, 630-5/16M	$69.80
646M	Set contains: 646-1/4M, 646-5/16M	$79.90

7-Piece Nut Driver Set - 3" Shafts

Part #	Description	LIST
631	7-Piece Nut Driver Set - 3" Shafts	$194.70

7-Piece Hollow-Shaft* Magnetic Tip Nut Driver Set - 3" Shafts

Part #	Description	LIST
631M	7-Piece Hollow-Shaft* Magnetic Tip Nut Driver Set - 3" Shafts	$274.50



7-Piece Nut Driver Set - 6" Shafts

Part #	Description	LIST
647	7-Piece Nut Driver Set - 6" Shafts	$212.00

7-Piece Hollow-Shaft* Magnetic Tip Nut Driver Set - 6" Shafts

Part #	Description	LIST
647M	7-Piece Hollow-Shaft* Magnetic Tip Nut-Driver Set - 6" Shafts	$299.30



Hollow-Shaft Nut Drivers - 3" Shafts



Part #	Hex Size	LIST
630-1/4	1/4"	$29.90
630-5/16	5/16"	$28.70
630-11/32	11/32"	$28.60
630-3/8	3/8"	$29.90
630-7/16	7/16"	$32.30

Hollow-Shaft Nut Drivers - 6" Shafts



Part #	Hex Size	LIST
646-3/16	3/16"	$30.00
646-1/4	1/4"	$29.80
646-5/16	5/16"	$30.10
646-11/32	11/32"	$30.10
646-3/8	3/8"	$32.40
646-7/16	7/16"	$35.00
646-1/2	1/2"	$37.70
646-9/16	9/16"	$47.40
646-5/8	5/8"	$51.10

POWER TOOLS

MILWAUKEE®

115v Power Tools (Corded)

8975-6

Dual Temperature Heat Gun



6852-20

18 Gauge Shear



Rotary Hammer Drills

5262-21

7/8" SDS Plus Rotary Hammer Kit



5263-21

5/8" SDS Plus Rotary Hammer Kit



M12™ Cordless Tools

2504-22

M12 FUEL™ 1/2" Hammer Drill Kit
(Bare tool 2504-20)



2520-21XC

M12 FUEL™ HACKZALL® Recip Saw Kit
(Bare tool 2520-20)



2426-20

M12™ Cordless Lithium-Ion Multi-Tool



2553-20

M12 FUEL™ 1/4" Hex Impact Driver



2456-20

M12™ Cordless Lithium-Ion 1/4" Ratchet



2457-20

M12™ Cordless Lithium-Ion 3/8" Ratchet



Please contact your local branch for more information and pricing

POWER TOOLS

MILWAUKEE®

M12™ Cordless Tools

2458-20

M12™ Cordless Lithium-Ion Palm Nailer (Bare Tool)



2460-21

M12™ Cordless Lithium-Ion Rotary Tool (Bare tool 2460-20)



2470-21

M12™ Cordless Lithium-Ion PVC Shear Kit (Bare tool 2470-20)



2471-21

M12™ Cordless Lithium-Ion Copper Tubing Cutter (Bare tool 2471-20)



2494-22

M12™ Cordless Lithium-Ion 2-Tool Combo Kit (Drill Driver and Impact Driver)



49-24-0146

M12™ Cordless LED Work Light



2429-20

M12™ Sub-Compact Band Saw



2554-20

M12 FUEL™ 3/8" Stubby Impact Wrench



M12™ Batteries

48-11-2401

M12™ REDLITHIUM™ CP1.5 Battery Pack



48-11-2420

M12™ REDLITHIUM™ CP2.0 Battery



48-11-2440

M12™ REDLITHIUM™ XC 4.0 Extended Capacity Battery Pack



48-11-2460

M12™ REDLITHIUM™ XC6.0 Battery



M12™ Chargers

48-59-1810

M18™ / M12™ Vehicle Charger



48-59-1812

M18™ / M12™ Multi-Voltage Charger



POWER TOOLS

MILWAUKEE®

M18™ Cordless Tools

0880-20

M18™ Cordless Lithium-Ion Wet/Dry Vacuum



2803-22

M18 FUEL™ 1/2" Drill/Driver Kit
(Bare tool 2803-20)



2902-22

M18™ 1/2" Compact Brushless Hammer Drill Kit
(Bare tool 2902-20)



2804-22

M18™ FUEL 1/2" Hammer Drill Kit
(Bare tool 2804-20)



2821-22

M18 FUEL™ SAWZALL® Reciprocating Saw - 2 Battery XC5.0 Kit
(Bare tool 2821-20)



2782-20

M18 FUEL™ Metal Cutting Circular Saw



2625-21

M18™ Cordless Lithium-Ion Hackzall® Recip Saw Kit
(Bare tool 2625-20)



2872-20

M18™ Brushless Threaded Rod Cutter



2853-20

M18 FUEL™ 1/4" Hex Impact Driver



2606-20

M18™ Compact 1/2" Drill Driver



2691-22

M18™ Cordless LITHIUM-ION 2-Tool Combo Kit
(Hammer Drill and Impact Driver)



2997-22

M18™ Lithium-Ion Brushless Cordless Hammer Drill & Impact Driver Kit



M18™ Batteries

2735-20

M18™ Cordless LED Work Light



2767-20

M18 FUEL™ 1/2" High Torque Impact Wrench with Friction Ring



48-11-1820

M18™ REDLITHIUM™ CP2.0 Battery



48-11-1840

M18™ REDLITHIUM™ XC 4.0 Extended Capacity Battery Pack



48-11-1850

M18™ REDLITHIUM™ XC5.0 Extended Capacity Battery Pack



48-11-1880

M18™ REDLITHIUM HIGH OUTPUT™ XC8.0 Battery



M18™ Chargers

48-59-1850

M18™ REDLITHIUM™ XC5.0 Starter Kit



48-59-1806

M18™ Six Pack Sequential Charger



48-59-1810

M18™ / M12™ Vehicle Charger



Please contact your local branch for more information and pricing

POWER TOOL ACCESSORIES

MILWAUKEE®



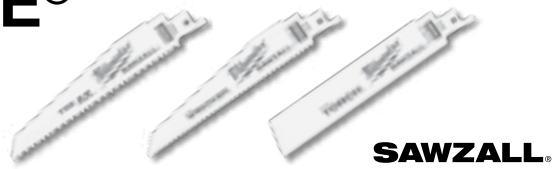

SHOCKWAVE™ DRILL & DRIVING BITS		LIST
49-66-4502	1/4X1 7/8 IMPCT MAG NTDVR	$7.40
49-66-4503	5/16X1 7/8 IMPCT MAG NUTD	$7.80
49-66-4505	3/8X1 7/8 IMPCT MAG NUTDR	$8.70
49-66-4506	7/16X1 7/8 IMPCT MAG NTDVR	$13.40
49-66-4522	3PK 1/4X1 7/8 IMPCT MAG NTDVR	$21.80
49-66-4523	3PK 5/16X1 7/8 IMPCT MAG NTDVR	$22.60
49-66-4525	3PK 3/8X1 7/8 IMPCT MAG NTDVR	$25.70
49-66-4526	3PK 7/16X1 7/8 IMPCT MAG NTDVR	$38.90
49-66-4532	1/4X2 9/16 IMPCT MAG NTDVR	$8.70
49-66-4533	5/16X2 9/16 IMPCT MAG NTDV	$9.50
49-66-4535	3/8X2 9/16 IMPCT MAG NTDVR	$9.60
49-66-4536	7/16X2 9/16 IMPCT MAG NTDV	$16.20
48-32-4411	2PK 1IN IMPCT BIT PH1	$4.30
48-32-4412	2PK 1IN IMPCT BIT PH2	$4.30
48-32-4413	2PK 1IN IMPCT BIT PH3	$4.30
48-32-4421	2PK 1IN IMPCT BIT SQ1	$4.30
48-32-4422	2PK 1IN IMPCT BIT SQ2	$4.30
48-32-4444	2PK 1IN IMPCTBIT PH2 RDCDIA	$4.30
48-32-4462	1PK 2IN PWR IMPCT BIT PH2	$5.00
48-32-4463	2IN PWR IMPCT BIT PH3	$5.00
48-32-4471	2IN PWR IMPCT BIT SQ1	$5.00
48-32-4472	2IN PWR IMPCT BIT SQ2	$5.00
48-32-4473	2IN PWR IMPCT BIT SQ3	$5.00
48-32-4483	2IN PWR IMPCT BIT TX15	$5.00
48-32-4484	2IN PWR IMPCT BIT TX20	$5.00
48-32-4485	2IN PWR IMPCT BIT TX25	$5.00
48-32-4487	2IN PWR IMPCT BIT TX30	$5.00
48-32-4503	3IN IMPCT MAG BIT HLDR	$16.30
48-32-4562	3 5IN PWR IMPCT BIT PH2	$7.10
48-32-4572	3 5IN PWR IMPCT BIT SQ2	$7.10
48-32-4601	5PK 1IN IMPCT BIT PH2	$10.70
48-32-4602	5PK 2IN PWR IMPCT BIT PH2	$21.70
48-32-4605	5PK 1IN IMPCT BIT SQ2	$10.70
48-32-4606	5PK SQ RECESS 2 2 PWR BIT	$21.70
48-32-4802	2 PHILLIPS 6 PWR BIT	$11.30
48-32-4805	SQ2 6 POWER BIT	$11.30
49-66-4561	3PC 1 7/8IN MAG NUT DR SET	$23.60
49-66-4562	4PC 1 7/8IN MAG NUT DR SET	$37.00
49-66-4419	8PC 3/8IN IMP SCKT DR DEEP	$125.20
48-03-4405	3/8 SQ TO 1/4 HEX IMPCT ADAPT	$54.70
48-03-4410	1/2 SQ TO 1/4 HEX IMPCT ADAPT	$56.40
48-32-5030	1/4 X 2IN SOCKET ADAPTER	$8.40
48-32-5031	3/8 X 2IN SOCKET ADAPTER	$11.00
48-32-5032	1/2 X 2IN SOCKET ADAPTER	$12.90

SAWZALL® BLADES		LIST
48-00-1600	FLUSH CUT SAWZALL BLADE 1PK	$73.10
48-00-1630	DUCTWORK SAWZALL BLADE 5PK	$53.20
48-00-1640	DRYWALL ACCESS BLADE	$16.00
48-00-4182	ICE HARDENED BLADE 14T 6L 5PK - METAL	$44.50
48-00-4184	ICE HARDENED BLADE 18T 6L 5PK - METAL	$44.50
48-00-4787	ICE HARDENED 14T9L TORCH 5PK - METAL	$78.50
48-00-4788	ICE HARDENED 18T9L TORCH 5PK - METAL	$78.50
48-00-5021	SUPER SAWZALL 5T 6L AX 5pk - WOOD	$51.20
48-00-5026	SUPER SAWZALL 5T 9L AX 5pk	$68.00
48-00-5027	SUPER SAWZALL 5T 12L AX 5pk	$78.20
48-00-5035	SUPER SAWZALL 5T6L 5pk - WOOD	$45.70
48-00-5036	SUPER SAWZALL 5T9L 5pk	$59.80
48-00-5037	SUPER SAWZALL 5T12L 5pk	$67.70
48-00-5093	SUPER SAWZALL BL 8/12T 8L 5PK- MULTI	$49.10
48-00-5182	SUPER SAWZALL BL 14T 6L 5PK - METAL	$38.30
48-00-5184	SUPER SAWZALL BL 18T 6L 5PK	$38.30
48-00-5186	SUPER SAWZALL BL 24T 6L 5PK	$38.30
48-00-5187	SUPER SAWZALL BL 14T 9L 5PK	$46.90
48-00-5188	SUPER SAWZALL BL 18T 9L 5PK	$46.90
48-00-5782	SUPER SAWZALL 14T 6L TORCH 5pk	$52.50
48-00-5784	SUPER SAWZALL 18T 6L TORCH 5PK	$52.50
48-00-5787	SUPER SAWZALL 14T 9L TORCH 5PK	$69.70
48-00-5788	SUPER SAWZALL 18T 9L TORCH 5PK	$69.70
49-22-3329	12 PC SAWZALL BLADE SET	$104.00
49-22-1131	14 PC ICE HARDENED BLADE SET	$135.60
49-22-3310	10 PC SAWZALL BLADE SET	$76.70

POWER TOOL ACCESSORIES

MILWAUKEE®





HOLE SAWS		LIST
49-22-4175	15 GENERAL KIT	$415.00
49-56-0023	3/4	$21.40
49-56-0032	7/8	$21.40
49-56-0043	1	$21.60
49-56-0052	1 1/8	$21.60
49-56-0062	1 1/4	$21.60
49-56-0072	1 3/8	$22.70
49-56-0082	1 1/2	$22.70
49-56-0092	1 5/8	$22.70
49-56-0102	1 3/4	$28.60
49-56-0117	2	$28.60
49-56-0127	2 1/8	$34.10
49-56-0132	2 1/4	$34.10
49-56-0142	2 3/8	$34.10
49-56-0147	2 1/2	$37.60
49-56-0158	2 5/8	$37.60
49-56-0163	2 3/4	$37.60
49-56-0173	3	$40.00
49-56-0177	3 1/8	$40.00
49-56-0183	3 1/4	$40.00
49-56-0193	3 1/2	$42.80
49-56-0197	3 5/8	$47.10
49-56-0213	4	$59.10
49-56-0217	4 1/8	$63.20
49-56-0223	4 1/4	$83.60
49-56-0233	4 1/2	$116.00
49-56-0237	4 3/4	$128.80
49-56-0243	5	$143.00
49-56-0253	6	$147.30
49-56-7010	3/8 HOLE SAW ARBOR	$25.20
49-56-8000	4IN PILOT BIT SKINCARDED	$10.30
49-56-8010	5IN PILOT BIT SKINCARDED	$10.30

BIG HAWG™ HOLE CUTTERS		LIST
49-56-9210	2 1/8	$91.80
49-56-9220	2 9/16	$108.80
49-56-9230	3"	$124.90
49-56-9240	3 5/8	$147.50
49-56-9255	4 1/4	-
49-56-9265	4 5/8	$233.30
49-56-9270	5 1/4	$245.50
49-56-9275	6 1/4	$310.00
49-56-9280	7PC KIT	$396.00
48-56-9300	CENTER SPADE BIT	-
49-56-9305	ARBOR	$58.60
48-09-5055	FILE	$36.40



SDS+ CARBIDE CORE BITS

CORE BODY W/GUIDE PLATE & CENTERING PIN*		LIST
48-20-5005	1" Depth: 3-3/16	$132.30
48-20-5010	1-1/8" Depth: 3-3/16	$143.10
48-20-5015	1-1/4" Depth: 3-3/16	$242.30
48-20-5020	1-3/8" Depth: 3-3/16	$180.10
48-20-5025	1-1/2" Depth: 3-3/16	$196.40
48-20-5030	1-3/4" Depth: 2-13/16	$221.00
48-20-5035	2" Depth: 2-13/16	$338.00
48-20-5040	2-1/2" Depth: 2-13/16	$234.70
48-20-5045	3" Depth: 2-13/16	$322.00
48-20-5050	3-1/2" Depth: 2-13/16	$388.00
48-20-5055	4" Depth: 2-13/16	$580.00

*Guide plate and centering pin not included with 1" & 1-1/8" diameter core bits



SDS+ ADAPTER SHANK		LIST
48-03-3545	8"	$113.30
48-03-3555	8"	$113.30
48-03-3551	12"	$129.30
48-03-3561	12"	$129.30

POWER TOOL ACCESSORIES

MILWAUKEE®



BLACK OXIDE DRILL BITS		LIST
48-89-2710	2PK 1/16IN	$4.70
48-89-2711	2PK 5/64IN	$4.80
48-89-2712	2PK 3/32IN	$4.90
48-89-2713	2PK 7/64IN	$4.90
48-89-2714	2PK 1/8IN	$5.00
48-89-2715	9/64IN	$3.20
48-89-2716	5/32IN	$3.40
48-89-2717	11/64IN	$3.40
48-89-2718	3/16IN	$3.90
48-89-2719	13/64IN	$4.30
48-89-2720	7/32IN	$4.70
48-89-2721	15/64IN	$5.00
48-89-2722	1/4IN	$5.30
48-89-2723	17/64IN	$6.30
48-89-2724	9/32IN	$7.10
48-89-2725	19/64IN	$7.60
48-89-2726	5/16IN	$7.80
48-89-2727	21/64IN	$8.70
48-89-2728	11/32IN	$9.80
48-89-2729	23/64IN	$10.80
48-89-2730	3/8IN	$10.80
48-89-2731	25/64IN	$17.20
48-89-2732	13/32IN	$17.50
48-89-2733	27/64IN	$18.70
48-89-2734	7/16IN	$20.10
48-89-2735	29/64IN	$21.20
48-89-2736	15/32IN	$24.00
48-89-2737	31/64IN	$24.80
48-89-2738	1/2IN	$25.40
48-89-2803	15 PC KIT	$69.20

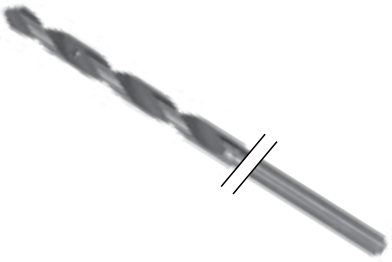

BELLHANGER BITS		LIST
48-13-7137	3/8IN 12L	$33.80
48-13-7125	1/4IN 18L	$29.30
48-13-7237	3/8IN 18L	$37.70



STEP DRILL BITS		LIST
48-89-9201	1/8" - 1/2"	$77.70
48-89-9202	3/16" - 1/2"	$94.90
48-89-9203	1/4" - 3/4"	$121.10
48-89-9204	3/16" - 7/8"	$122.00
48-89-9205	1/4" - 1-3/8"	$176.30
48-89-9206	3/8" - 1/2"	$88.00
48-89-9207	7/8"	$148.50
48-89-9208	1/2" - 1"	$160.70
48-89-9209	7/8" - 1-1/8"	$142.40
48-89-9211	7/8" - 1-7/32"	$212.50
48-89-9212	7/8" - 1-3/8"	$166.10
48-89-9221	3PC SET	$311.00
48-89-9223	4PC SET	$457.00



SHIP AUGER BITS		LIST
48-13-5750	3/4 X 18 IN	$75.20
48-13-5870	7/8 X 18 IN	$84.70
48-13-6000	1 X 18 IN	$91.20
48-13-6120	1 1/8 IN	$116.90
48-13-6250	1 1/4 IN	$135.80



SDS+ BITS		LIST
48-20-7065	3/4 X 10 X 12	$72.10
48-20-7072	7/8 X 10 X 12	$99.90
48-20-7410	3/16 X 2 X 4 1/2	$12.70
48-20-7411	3/16 X 4 X 6	$13.50
48-20-7430	1/4 X 2 X 4 1/2	$12.30
48-20-7431	1/4 X 4 X 6	$13.50
48-20-7441	5/16 X 4 X 6	$18.00
48-20-7451	3/8 X 4 X 6	$16.70
48-20-7454	3/8 X 10 X 12	$34.20
48-20-7471	1/2 X 4 X 6	$21.80
48-20-7474	1/2 X 10 X 12	$33.40
48-20-7490	5 PC KIT	$78.20
48-20-7602	5/8 X 6 X 8	$38.40
48-20-7604	5/8 X 10 X 12	$57.50



HAMMER DRILL BITS		LIST
48-20-9016	5/16 X 4 X 6	$10.20
48-20-9021	3/8 X 4 X 6	$12.70
48-20-9030	1/2 X 4 X 6	$17.90
48-20-9031	1/2 X 10 X 12	$31.20

BLADES & HACKSAWS

MILWAUKEE®

12" High Tension Hacksaw



- Reinforced Metal Frame - Durable frame supports higher tensionInternal
- Blade Storage - Stores up to six extra blades
- Overmolded Handle - Ensures secure grip and user comfort

Part #	Description	LIST
48-22-0050	12" High Tension Hacksaw	$89.80

Milwaukee Saws

- Heavy duty aluminum handle
- Complete with 6" Lenox reciprocating blade
- Blade folds away safely
- Locks in 3 positions
- Comfortable hand grip
- Hanging hole in handle
- Accepts reciprocating blades using 1/2" tang
- Cuts in hard-to-get-at places
- Fits in your pocket
- Saves time



48-22-0305



48-22-0012



48-22-0104



48-22-0218

Part #	Description	LIST
48-22-0305	Folding Jab Saw	$48.60
48-22-0104	Rasping Jab Saw	$27.60
48-22-0012	Compact Hack Saw	$37.00
48-22-0218	18" PVC/ABS Saw	$70.20

SHEET METAL TOOLS

HILMOR

SNIPS

LONG BLADE LIFE
Precision-formed blades for Aviation and Bulldog Snips
Bi-Metal blades for Offset Snips

ULTIMATE SPRING DURABILITY
Reinforced Chrome Silicone valve-quality wire lasts for a lifetime

COMFORTABLE GRIPS
Over-molded handles won't slip or twist

Part #	LIST
1891133	$89.70
1891134	$108.90
1891135	$109.10
1891137	$165.90
1891138	$182.50



1891133 AVIATION SNIP - LEFT



1891134 AVIATION SNIP - RIGHT



1891135 AVIATION SNIP - STRAIGHT



1891137 OFFSET SNIP - LEFT



1891138 OFFSET SNIP - RIGHT

HVAC TOOLS

ULTIMATE SPRING DURABILITY
Reinforced Chrome Silicone valve-quality wire lasts for a lifetime

COMFORTABLE GRIPS
Over-molded handles won't slip or twist

Part #	LIST
1891187	$194.90
1891185	$195.40
1891180	$163.20



1891187 C5 5 BLADE CRIMPER



1891180 N2 V NOTCHER



1891185 S2 3" SEAMER

TUBE CUTTERS

MILWAUKEE

1/2" Mini Copper Tubing Cutter

- 1/8" - 5/8" Cut Capacity
- Proprietary Adjustment Mechanism
- Chrome Rollers Easy Grip Knob

Part #	LIST
48-22-4250	$48.10



1" Mini Copper Tubing Cutter

- 1/8" - 1-1/8" Cut Capacity
- Proprietary Adjustment Mechanism
- Chrome Rollers
- Easy Grip Knob
- Extra Blade Included

Part #	LIST
48-22-4251	$77.70



1-1/2" Constant Swing Copper Tubing Cutter

- 1/8" - 1-5/8" Cut Capacity
- 4 Roller Design
- Chrome Rollers
- Smooth Adjustment Mechanism
- On-Board Reamer

Part #	LIST
48-22-4252	$177.50



M12™ Cordless Lithium-Ion Copper Tubing Cutter Kit

- Powerful 500-RPM motor: Cuts up to 10X faster than conventional cutters
- Automatically adjusts from 3/8” to 1” tubing and rotates to cut in confined spaces
- Water-resistant sealed head and unibody construction: Deliver exceptional durability
- REDLITHIUM™ Battery Technology
- Onboard Battery Fuel Gauge: Displays remaining runtime



Part #	LIST
2471-21	$790.00

Tubing Cutter

- All-Metal Core
- Cuts up to 1" Rubber, Plastic, and PEX Tubing
- Use with Milwaukee Tubing Cutter Blade
- Ergonomic Handle
- Lanyard Hole
- Rust Protection



Part #	LIST
48-22-4204	$72.30

2 PC Replacement Cutter Wheels

Part #	Description	LIST
48-22-4256	Replacement Cutter Wheels 2PK	$33.10



TUBE CUTTERS
HILMOR / MILWAUKEE

Tube Cutters

Part #	Description	Tube Diameter Range (in)	LIST
1885381	Copper Cutting	1/8” to 5/8”	$93.60
1885382	Copper Cutting	1/8” to 1”	$190.20
1885383	Copper Cutting	1/8” to 1-1/8”	$165.30
1885384	Copper Cutting	1/8” to 1-3/8”	$357.00
1885385	Copper Cutting	1/8” to 1-3/4”	$577.00
48-22-4253	2-1/2" Quick Adjust Copper Tubing Cutter	1/2" - 2-5/8"	$290.10



1885381



1885384

Part #	Description	LIST
1885387	Copper Cutting Wheels* (2-Pack)	$64.00
1885386	Small Copper Cutting Wheels** (2-Pack)	$59.70
21024TCD	Replacement Deburrer fits 21011 & 21012 TC (1-Pack)	$32.70

*Fits Prod. No. 1885383, 1885384, 1885385, 21013
** Fits Prod. No. 1885381, 1885382



48-22-4253



1885387

Close Quarters Tubing Cutter

For 1/4" to 2 3/8" (6–59mm) O.D. non-ferrous tube and plastic pipe and tube.



Part #	Description	LIST
4992	Close Quarters Tubing Cutter	$765.00
8038	Replacement Cutter Wheel	$65.20

TUBE BENDERS, LEVER TYPE

Ratchet Benders

Part #	Descriptions	LIST
1839032	Compact Bender Kit 1/4 in to 7/8 in, universal crossbar and color-coded materials, allow for bending with one hand, tube materials: soft copper, steel, brass, aluminum	$1,041.00
70070	Ratchet Cooper Tubing Tube Bender	$708.00



1839032


70070

Single Size Tube Benders

Open size design slips over tube at any point. Makes smooth short radius bends up to 180°. Calibrated to show angle of bend. Wide hook grips tubing securely. New fixed hook tube benders furnished for 1/4" to 1/2" O.D. sizes have easy 90° start.

Bending Range:

Part #	Tube O.D. (inches)	Nominal Size (inches)	Radius to Center of Tube (inches)	LIST
364-FHB-04	1/4*	1/8	9/16	$133.60
364-FHB-06	3/8*	1/4	15/16	$138.30
364-FHB-08	1/2*	3/8	1-1/2	$170.30
364-FHA-10	5/8	1/2	2-1/4	$215.40
364-FHA-12	3/4	5/8	3	$238.70
70067	7/8	3/4	3	$897.00

* Swivel handle may be repositioned to regain leverage for bends greater than 90°, eliminating bender twisting and handle crossing. Enclosed swivel mechanism provides extended life. Ideal for bending stainless steel, as well as other tubing.

style furnished for 1/4" through 1/2" OD tubing



style furnished for 7/8" OD tubing



Triple Head Tube Benders

Part #	Descriptions	LIST
367FH	For 1/8", 3/16", and 1/4" (3, 4 & 6mm) O.D. tubing. 9/16" radius to center of tube.	$62.30
368FH	For 1/4", 5/16" and 3/8" (6 & 8mm) O.D. tubing. 15/16" radius to center of tube.	$74.40
370FH	For 1/4", 3/8", and 1/2" O.D. tubing.	$139.10
1839027	hilmor Tri-Tube Bender 1/4", 3/8", 1/2"	$125.60


370FH


1839027

TUBE BENDERS, SPRING TYPE

For 1/4" to 3/4" O.D. tubing. Tools allow hand bending of soft tubing to any shape without collapsing walls. Special spring steel, nickel finished. End belled for quick tube removal.

Part #	Tube O.D. (inches)	Length (inches)	LIST
102F-04	1/4	10	$10.20
102F-05	5/16	10	$14.20
102F-06	3/8	10	$16.30
102F-08	1/2	12	$14.90
102F-10	5/8	12	$20.30
102F-12	3/4	12	$17.30
102F-14	7/8	12	$24.40



45° FLARING TOOLS

Orbital Flare

- Precise Flares - An off-center mounted cone spins on an axis to effectively produce quality flares
- No Cracked Tubes - A clutch mechanism stops the flaring when the job is done
- Simple Setup - A clothespin-inspired, spring-loaded block grips the tube securely
- Easy to Position - A tube-stop arrow slides to set correct height and positioning, while ball detects allow for easy flaring cone alignment



Part #	Description	LIST
1838952	Tube sizes (O.D.): 3/16, 1/4, 5/16, 3/8, 1/2, 5/8, 3/4"	$580.00



Part #	Description	LIST
195FC-SP	For 3/16", 1/4", 5/16", 3/8", 7/16", 1/2" and 5/8" O.D. tubing, (1/8", 1/4", 3/8" and 1/2" nom.). Self-centering yoke with swivel-type, hard chrome-finished flaring cone forms better flares with less effort. Design of yoke permits flaring where there is little space between nut and tube end.	$159.70

Rol-Air Flaring Tool



Part #	Description	LIST
500-FC-SP	For flaring and burnishing 3/16", 1/4", 5/16", 3/8", 1/2" and 5/8" O.D. tubing, (1/8", 1/4", 3/8" and 1/2" nom.). Flares rolled out above die bar by super-smooth faceted cone. Automatically burnishes flare face. Slip-on yoke permits use in tight quarters. Heat treated dies grip tubing without scoring.	$416.00

Grabber Rol-Air Flaring Tool



Part #	Description	LIST
525-F-ALL	Flares and burnishes 3/16" to 5/8" (5 to 16mm) O.D. tubing. Unique, self-adjusting, tube holding mechanism permits use in tight quarters. Faceted, hard chrome finished cone rolls out and burnishes perfect 45° flare above the tube holding mechanism.	$254.70



Part #	Description	LIST
93FB	For 3/16", 1/4", 5/16", 3/8" and 1/2" O.D. tubing. Recommended for Bundy, GM and other brazed or welded soft steel tubing (wall thickness to .035"). Also makes single or double flares in soft copper or aluminum tubing. Forges steel yoke; swivel-type hard chrome-finished flaring cone.	$157.40

TUBING TOOL KITS

45° Flaring and Swaging Tool

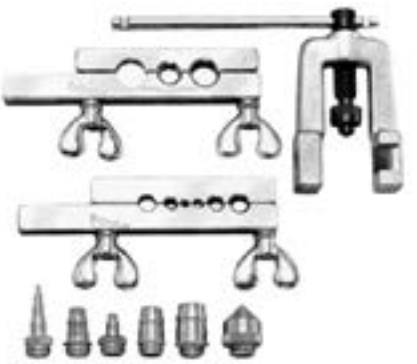

Part #	Description	LIST
275FS	For 1/8", 3/16", 1/4", 5/16", 3/8", 7/16", 1/2", 5/8" and 3/4" O.D. tubing, (1/8", 1/4", 3/8", 1/2" and 5/8" nom.). Includes five swage adapters for 3/16", 1/4",5/16", 3/8", 1/2" and 3/4" O.D. tubing, (1/8", 1/4", 3/8", 1/2" and 5/8" nom.) Flares or swages. Converts quickly. Screw-type-feed. Ideal close quarters tool. Swivel-type swaging adapters and spreader cone are hard chrome-finished for easy operation. Self-centering, slip-on forged steel yoke. In plastic kit.	$315.00

45° Flaring Kits

Compact kits contain two flaring bars and one yoke. Self-centering forged steel yoke has slip-on feature. Swivel-type flaring cone reduces effort required. Positive clamping action of flaring bars eliminates tube movement. In plastic case.

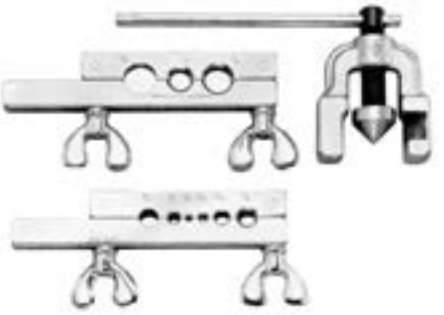

Part #	Description	LIST
375FS	For 1/8", 3/16", 1/4", 5/16", 3/8", 7/16", 1/2", 5/8", and 3/4" O.D. tubing, (1/8", 1/4", 3/8", 1/2" and 5/8" nom.).	$264.60

Hilmor Compact Swage Tool

It has the power to swage 1-5/8" tubing and the control to swage 5/16" tubing without a crack. With its small, pistol-shape design, it can fit in the smallest of spaces.



Part #	Description	LIST
1839015	Kit Contents: 3/8", 1/2", 5/8", 3/4" and 7/8" Expander Heads.	$2,231.00

Yellow Jacket Lightweight Swaging and Flaring Tool Kit

- Six quick-change positions for flaring soft chopper and aluminum tube
- The chrome finish of the swaging pins allows for an easy swaging operation
- Strong aluminum bars – each hole flare tested more than 1000 times



Part #	Description	LIST
60430	6 positions for 1/4, 5/16, 3/8, 1/2, 5/8 and 3/4” O.D. tube; hex wrench included	$703.00

SWAGING TOOLS
IMPERIAL

Punch-Type Swaging Tools

Use these tools for making tubing connections without fittings. Enlarge end of tube, insert another tube, solder like a sweat fitting.

Swaging Punches:

Part #	O.D. Size (in)	Nominal Size (in)	LIST
93S-04-ALL	1/4	1/8	$14.00
93S-05-ALL	5/16		$15.10
93S-06-ALL	3/8	1/4	$15.10
93S-08-ALL	1/2	3/8	$21.70
93S-10-ALL	5/8	1/2	$32.90
93S-12-ALL	3/4	5/8	$32.60
93S-14-ALL	7/8	3/4	$36.40
94S	1/2	3/8	$50.90
95-S	3/16, 1/4, 5/16, 3/8, 1/2, 5/8	6 in 1	$45.60

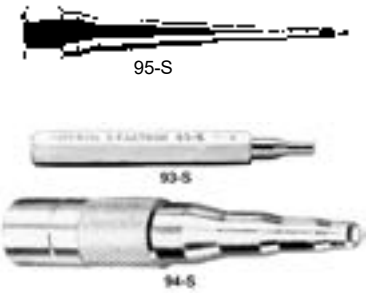

Swaging Punch Kit

Part #	Description	LIST
193-S	Contains four swaging punches - 1/4", 3/8", 1/2" and 5/8" O.D., (1/8", 1/4", 3/8" and 1/2" nom.) in vinyl case.	$95.60
195SA-ALL	Contains flaring bar and four swaging punches - 1/4", 3/8", 1/2" and 5/8" O.D., (1/8", 1/4", 3/8" and 1/2" nom.) in steel kit.	



TESTING AND SERVICE TOOLS

Pinch off Tool

Part #	Description	LIST
105-FF-SP	1/4", 3/8" and 1/2" O.D. Temporarily closes soft copper, aluminum or steel tubing so no liquid or gas passes sealed part. Opens tubing and rounds it back to shape.	$90.10
T21294	Plier type Pinch off tool fits 1/8" to 5/8" OD.	$74.50



Tubing Test Plugs

1/4" to 1-5/8" O.D. For temporary shut-off of tubing without pinching it off or installing a valve. Especially handy for plumbing, heating, refrigeration and instrumentation when trouble-shooting for leaks. Synthetic rubber expander seals tube and holds pressure to 100 psi.

Part #	Tube O.D. (inches)	Nominal Size (inches)	Weight (oz)	LIST
140F-04-ALL	1/4	1/8	1/2	$30.30
140F-06-ALL	3/8	1/4	3/4	$20.20
140F-08-ALL	1/2	3/8	1	$34.30
140F-10-ALL	5/8	1/2	1-1/2	
140F-12-ALL	3/4	5/8	2	$25.60
140F-14-ALL	7/8	3/4	3	
140F-18-ALL	1-1/8	1	4	$67.50
142F-ALL	1/2, 5/8 & 7/8	3/8, 1/2 & 3/4	9	$113.90



DEBURRING TOOLS

Inner / Outer Reamer and Deburring Tool

Ream both inside and outside edges of tube with three hollow ground tool steel cutters. Fit comfortably in hand.


RB1000


208-F-SP


48-22-4255


NG8150


#5-10 Deburr Replacement Blade

Part #	Description	LIST
208-F-SP	Reamer for copper, aluminum and brass tubing. Blue finish. Weight: 10oz.	$91.10
RB1000	Noga pocket deburring tool, includes 12mm hexagonal aluminum painted handle and S-10 blade.	$43.20
48-22-4255	Reaming Pen provides easy deburring of copper tubing and PVC	$27.40
NG8150	Noga S Promo Set - includes 1 handle and 10 S-10 blades	$74.60
S-10	Replacement blade	$7.10

FIN TOOLS & BRUSHES

Multi-Head Fin Tool

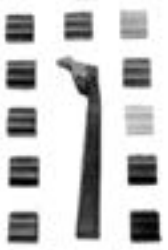

Part #	Description	LIST
T-100	Kit (1 handle and 6 heads: 8, 9, 10, 11, 12, 14)	$24.60

Fin Tool

All metal long lasting fin straightener. Straightens and cleans condenser and evaporator fins. One tool for all units.



Part #	Description	LIST
T20353	Fin Tool with heavy duty bicycle handle	$54.00

Fin Combs



Part #	Description	LIST
T20351	Cleans 8, 9, 10, 12, 14 & 15 fins per inch	$56.30

Wire Brushes



Part #	Description	LIST
81234	Shoe handle style Tempered Steel Wire , 10" long hardwood block, 4 x 16	$23.10
73834	Mini Welder's Brush - stainless steel	$24.20
73836	Mini Welder's Brush - brass	$23.70

Fin Whisk Brush



Part #	Description	LIST
B-26	A plastic handled whisk for cleaning condenser and evaporator fins.	$9.60

SuperComb

The new easier to grip, easier to use tool for straightening condenser and evaporator fins. Strong, durable, heavy duty nylon.



Part #	Description	LIST
T-408-ALL	8 and 10 FPI - orange	
T-409-ALL	9 and 15 FPI - yellow	$13.00
T-411-ALL	11 and 13 FPI - blue	
T-412-ALL	12 and 14 FPI - green	
T-417	16 and 17 FPI - lime	$15.50
T-418	18 and 20 FPI - red	$16.10
T-400	Set of 6 - includes 1 each: T-408, T-409, T-411, T-410, T-417 , T-418	$44.20

TUBE CLEANERS & BRUSHES

Condenser Tube & Heat Exchanger Brushes



Condenser tube and heat exchanger brushes are available in two bristle materials: stainless steel and brass. Bristle sizes are graduated from 0.006" on small diameter brushes to 0.012" on larger sizes to provide consistent cleaning power. There are not OD threads on 3/8" brushes. Shank length is 2". Adapters are also available to accommodate other standard thread sizes.

Part #	Materials	Brush Dia.	Brush Length	Overall Length	Wire Size	LIST
65145	Stainless	1/2"	4 1/2"	7 1/2"	0.008	$83.10
65155	Stainless	5/8"	4 1/2"	7 1/2"	0.008	$83.10
65185	Stainless	1"	4 1/2"	7 1/2"	0.010	-
65260	Brass	1/2"	4 1/2"	7 1/2"	0.008	$78.50
65270	Brass	5/8"	4 1/2"	7 1/2"	0.008	$78.50
65300	Brass	1"	4 1/2"	7 1/2"	0.010	$87.70

Extension Rod for Condenser Tube Brushes



Part #	Description	LIST
65001	T-handle 1/2" x 3" with 5/16-18 male female thread	$25.60
65002	36" steel extension rod	$159.90
65003	Brush adapter to comp. rod (5/16-18 male brush to 12-24 female rod	$33.30
65004	Rod adapter to comp. brush (5/16-18 female rod to 12-24 male brush)	$32.80
65006	T-handle for steel extension rods.	$27.20
65010	24" fibre lass ext. rod 5/16-18 1/8" NPT	$84.90
65015	36" fibre lass ext. rod 5/16-18 1/8" NPT	$85.80
65016	48" fibre lass ext. rod 5/16-18 1/8" NPT	

CAPILLARY TUBE TOOLS

Complete Cap-Check Outfit

Contains 1003 & 1101 c/w extended base & carrying case.

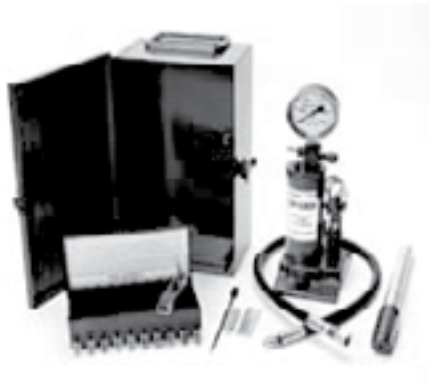

Part #	LIST
5101	-

Cap-Check Chaser Kit

- Cleans out plugged tubes
- c/w 10 spools of wire (for 10 most popular cap sizes), cap tube gauge,
  sizing tools, filer/reamer and metal case
- Sizes: .028, .031, .036, .039, .042, .046, .050, .055, .064, and .070



Part #	LIST
1101	$355.00

Capillary Tube Gauges

- Measures I.D. & O.D. for all capillary tube sizes



Part #	LIST
A10971	$137.50

J/B Cap Tube Cutter

- Sturdy design results in no collapsing of the tube, clean cuts, and no chips.



Part #	LIST
A10973-JBI	$35.60

SERVICE MANIFOLDS

800 Series 4-Valve Manifolds



- 4-Valve Efficiency
  Vacuum, low side, high side & refrigerant lines are individually connected & controlled. No need to switch charging lines.
- 4-Times Faster Evacuation
  3/8" vacuum port & oversize internal passages evacuate systems four times faster than ordinary manifolds. 3/8" port has greater area than combined inlets of high & low side lines.
- Unique Deep Draw Vacuum Valve Design
- With hoses and ball valve & sight glass hoses

Part #	Refrigerant	Charging Lines	Manifold Port Connections	LIST
846CSC	R-410A ,R-22, R404A	3-60” w/Low Loss Ball Valve Shut-Off, 1-60” 3/8” VAC Line	1/4" & 3/8" SAE	$946.00

Brass 4 Valve Ball Valve Manifold



Ball valve manifold, glow-in-the-dark 3-1/8" gauges for r-22, r-404a, r-410a. Features four valves that operate with an internal metering ball valve that can do finite openings perfect for charging in liquid form. No liquid charging adapter necessary. Sturdy brass construction with hose holders that swivel to the front or back for greater flexibility

Part #	LIST
26225	$614.00
26225L	$729.00

4 Valve 3/8" Bore Aluminum Manifold



- 3-1/8" Glow-In-The-Dark Gauges
- R22, R-404A, R410A
- JB Full Flow Design For Faster Evacuation

Part #	LIST
25225	$557.00

Part #	Description	LIST
CCLS4-60	Set of four 60" Kobra High Pressure Hoses	$601.00
CCLE4-60	Set of four Secure Seal Hoses	$473.00

SERVICE MANIFOLDS

Standard Brass Two Valve Manifold



- Standard 2-1/2" Gauges
- R22, R-404A, R410A with Boots
- Includes Set Of Three 60" Kobra CCLE High Presure Hoses
- Free Floating Dual O-ring Sealing System And Stem Seats That Full Retract Result In Fast Evacuation And Charging

Part #	LIST
M2-5-410AB	$401.00

2 Valve Aluminum Zeppelin Manifold



- 3-1/8" Glow-In-The-Dark Gauges
- R22, R-404A, R410A
- Includes Set Of Three 60" Kobra CCLE High Pressure Hoses

Part #	LIST
24233	$470.00

MULTIPLE REFRIGERANT MANIFOLDS

YELLOW JACKET

Yellow Jacket 41 Series 2-Valve Manifolds

- Gauges feature both temperature and pressure arcs.
  Bold easy-to-read dial
- Flutterless Technology. Surge protector helps minimize needle pulsation
- Metal hand wheels and piston with proven double "O" ring seal for long reliable service
- 1-1/2 turns of metal handles for full flow
- Forged solid brass body is precision machined and designed for maximum flow

Part #	Description	LIST
41212	no hose - R-12 / R-502 / R-22	$289.20
41312	no hose - R-134a / R-404A / R-507	$262.60
41712	no hose - R-410A	$257.10



Titan Charging Manifolds 4-Valve

Fast flow with full size bores in lightweight compact manifolds precision machined from an aluminum bar for rugged use.
Has 3-1/8" red & blue gauges.



Part #	Description	LIST
49932	no hose - R-134a / R-404A / R-407C	$651.00

DIGITAL REFRIGERATION ANALYZER

SMAN™ 4-Port Refrigerant Manifold with Micron Gauge



- Extra rugged design
- Stores up to 9 jobs internally
- View wireless probe and scale readings on manifold
- Measurements can be viewed on mobile devices up to 350 feet away when connected to the Job Link® System app

Part #	LIST
SM480V	$2,434.00

P51-870 Titan Digital Manifold



- Displays vapor and liquid saturation temperatures
- System superheat and subcooling calculations
- On board data logging; export to your computer through USB or to your phone via the ManTooth app
- Pressure hold mode displays rate of change for both vacuum and positive pressure measurements
- 4-way TITAN valve block
- blends not currently on the Refprop database.

Part #	LIST
40870	

Refrigeration System Analyzers

Testo 550 - Digital manifold kit with Bluetooth



- Includes two temperature clamp probes (two channel NTC temperature inputs) and service case
- Bluetooth / app integration for monitoring, generating reports, and sending reports and invoices via email
- Large 2-line backlit display
- Rugged housing with 5 year warranty with registration for reliable service

Testo 557 - 4-Valve digital manifold kit with Bluetooth and external vacuum gauge



- External vacuum probe for faster and more reliable system evacuation
- Bluetooth / app integration for monitoring, report generation, and sending reports and invoices via email
- Accurate, simultaneous superheat / subcooling measurements
- Rugged housing with 5 year warranty (upon registration) for reliable testing

Clamp probe (NTC) - For pipes from ¼" to 1 1/3"



- Precision NTC temperature sensor
- Collet for quick attachment
- Measuring range: -40 to +125 °C

Part #	Description	LIST
0564-5501-01	Testo 550s Basic Kit - Smart Digital Manifold With Wired Clamp Temperature Probes	$1,520.00
0564-5571-01	Testo 557s Smart Digital Manifold Kit with Wireless Vacuum and Clamp Temperature Probes	$2,760.00
0613-5505	Pipe Clamp Probe	$249.00

VACUUM GAUGES

INFICON Pilot Plus Vacuum Gauge



Works throughout the entire evacuation process of air conditioning or refrigeration systems. Its easy-to-read digital display accurately shows the vacuum level at every stage in the evacuation cycle, from atmosphere down to one micron.

Features:
- First and only HVAC/R vacuum gauge to use Pirani sensor technology for more precise readings
- Accurate readings from atmosphere (760,000 microns) down to one micron
- Digital display in microns, Pascal, Torr, or millibars

Part #	LIST
710-202-G1	$981.00

Ritchie Yellow Jacket LCD Vacuum Gauge 69075



The 69075 senses the full range from atmospheric pressure down to 1 micron.

Thermocouple Sensor Features:
- No adjustments or warm-up. Stays calibrated after on/off switching and long evacuations
- Automatic battery compensation
- Automatic ambient temperature compensation

LCD Gauge Features:
- Normal handling and jarring will not affect the LCD reading
- Rugged molded case protects electronic circuitry and sensor
- Precision circuitry controls sensor and translates sensor input into micron readings on the easy-to-read LCD

Part #	LIST
69075	$1,475.00

AccuTools BluVac+ LTE Digital Vacuum Gauge

Features:
- Bluetooth Smart® Wireless Capability
- 0 to 25,000 Micron Range with 1 Micron Resolution
- Measures Vacuum in Microns, Pascals, Millibar, Millitorr, and mmHg
- Large, high-visibility back-lit LCD display
- Long Battery Life — Up to 300 Hours on One 9V Alkaline Battery



Part #	LIST
A10730	$777.00

AccuTools BluVac+ Micro Digital Micron Gauge

Features:
- 0 - 25,000 Micron Range with 1 Micron Resolution
- 5 selectable units - Microns, Pascals, mBar, Torr, and mmHg
- Automatic Oil Sensor
- User Calibrate-able
- Can operate in below freezing temperatures (lithium AAA batteries recommended at low temps)



Part #	LIST
A10732	

VACUUM GAUGES

Testo 552 - Digital vacuum / micron gauge with Bluetooth



- Control and read complete measurement via smartphone
- With visual alarm and backlit display
- App for creating on-site reports
- Sending measurement protocols by e-mail
- High-precision measuring technology

Part #	LIST
0560-5522-01	$988.00

Appion Full Range Vacuum Gauge



- High-Resolution Full-Range Response
- Oil protection
- Durable
- Advanced System Analysis

Part #	LIST
AV760	$1,444.00

J/B Digital Vacuum Gauge with Case



- Solid State design – No adjustment needed for temperature
- 9 volt battery (not included)
- Accurate display from 25 - 12000 microns

Part #	LIST
DV-24N	$699.00

Fieldpiece MG44 – Wireless Vacuum Gauge



- Cylindrical shape and reversible angles coupler easier to fit in tight spaces
- View from 1) up to 1000' away via the Job Link® mobile app, 2) on the Fieldpiece SMAN™ Refrigerant Manifold, or 3) direct from the MG44's display
- New larger backlit LCD screen is easier to read

Part #	LIST
MG44	$791.00

Super Vak-Check II Model 14571

A thermistor vacuum gauge designed especially for refrigeration and air conditioning service. It automatically compensates for changes in ambient temperature and permits continuous monitoring during evacuation. Compact, lightweight, easy to use and read directly in microns on a large easy to read meter.

Features:
- AC/battery operated
- range: atmospher to 10 microns
- ambient temperature compensated
- complete with model 4510 sensor
- accuracy: 200-1000 microns ±5%
- power: 110AC or 2 "D" cell batteries (not included)



Part #	LIST
14571	$1,547.00

REFRIGERANT GAUGES

YELLOW JACKET

Yellow Jacket Manifold Gauges





Gases	Size	Type	Color	F/C	Scale	Accuracy	Part #	LIST
410A								
	2-1/2"	Steel	Hi Side	C/F	Kgcm²/PSI	3-2-3	49035	$68.10
	2-1/2"	Steel	Lo Side	C/F	Kgcm²/PSI	3-2-3	49036	$68.10
12/22/502								
	2-1/2"	Steel	Hi Side	F	PSI	3-2-3	49001	$77.50
	2-1/2"	Steel	Lo Side	F	PSI	3-2-3	49002	$77.50
	2-1/2"	Brass	Hi Side	F	PSI	1%	49067	$149.70
	3-1/8"	Liquid	Lo Side	F	PSI	3-2-3	49512	$228.00
134a/404A/507								
	2-1/2"	Steel	Hi Side	F	PSI	3-2-3	49051	$68.10
	2-1/2"	Steel	Lo Side	F	PSI	3-2-3	49052	$68.10
134a/404A/407C								
	2-1/2"	Steel	Hi Side	C	Bar/PSI	3-2-3	49063	$86.40
	2-1/2"	Steel	Lo Side	C	Bar/PSI	3-2-3	49064	$86.40
	3-1/8"	Steel	Hi Side	F	PSI	1%	49151	$90.30
	3-1/8"	Steel	Lo Side	F	PSI	1%	49152	$90.30
22/134a/404A								
	2-1/2"	Brass	Hi Side	F	PSI	1%	49067	$149.70
	2-1/2"	Brass	Lo Side	F	PSI	1%	49068	$149.70
	2-1/2"	Steel	Hi Side	F	PSI	3-2-3	49015	$68.10
	2-1/2"	Steel	Lo Side	F	PSI	3-2-3	49016	$68.10
	3-1/8"	Steel	Hi Side	F	PSI	1%	49105	$102.70
	3-1/8"	Steel	Lo Side	F	PSI	1%	49106	$68.10
22/404A/410A								
	3-1/8"	Steel	Hi Side	F	PSI	1%	49137	$90.30
	3-1/8"	Steel	Lo Side	F	PSI	1%	49138	$90.30

Protective Gauge Boots



- Rubber boots slip easily around gauges to cushion and protect them from impact.
- Fits 2-1/2” and 3-1/8” gauges.
- Color coded red or blue to match gauge.

Part #	Description	LIST
49090-RIT	Protective Boot Set 2-1/2"	$72.60
49190-RIT	Protective Boot Set 3-1/2"	$78.90
49010-RIT	Replacement Crystal 2-1/2"	$19.60
49100-RIT	Replacement Crystal 3-1/2"	$24.30

	ECONOMY PRESSURE		QUALITY						AMMONIA				
DIAL SIZE	2-1/2"	4"	4-1/2"	2-1/2"	2-1/2"	2-1/2"	2-1/2"	4"	2-1/2"	2-1/2"	4"	4"	4"
CONNECTION	BOTTOM	BOTTOM	BOTTOM	BOTTOM	BACK	BACK	BACK	BOTTOM	BOTTOM	BOTTOM	BOTTOM	BOTTOM	BOTTOM
NPT	1/4"	1/4"	1/4"	1/4"	1/4"	1/4"	1/4"	1/4"	1/4"	1/4"	1/4"	1/4"	1/4"
	DRY	DRY	DRY	LQD.FILL	LQD.FILL	LQD.FILL	LQD.FILL	LQD.FILL	DRY	LQD.FILL	DRY	LQD.FILL	LQD.FILL
						FRONT FLANGE	BACK FLANGE	BACK FLANGE					BACK FLANGE
30"		PEM221		PFQ801									
30"-0-150 PSI"		PEM222		PFQ792	PFQ892	PFQ892-25FF	PFQ892-25BF	PFQ705-4BF	PAM1699	PAM1750G	PAM1695	PAM1701G	PAM1701G-4BF
30"-0-300 PSI"				PFQ795				PFQ707-4BF	PAM1702G	PAM1751G	PAM1696	PAM1702G	PAM1702G-4BF
0-30	PEM212			PFQ802	PFQ902								
0-60	PEM213		PFQ803										
0-100	PEM214	PEM223		PFQ804	PFQ904								
0-160	PEM215	PEM224		PFQ805	PFQ905			PFQ712-4BF					
0-200	PEM216	PEM225		PFQ806	PFQ906								
0-300	PEM217		PCT326	PFQ807	PFQ907	PFQ907-25FF		PFQ714-4BF					
0-400				PFQ817	PFQ917								
0-600	PEM218			PFQ808	PFQ908	PFQ908-25FF	PFQ908-25BF	PFQ716-4BF					
0-2000				PFQ810									

PAM SERIES



PFQ SERIES (Liquid Filled)



PEM SERIES



AMMONIA SERIES (Liquid Filled)



PTC SERIES



Pressure and Temperature Kit PTK1500



PARTS/ELECTRICAL/
TOOLS 720-918

MAGNEHELIC DIFFERENTIAL PRESSURE GAUGES

DWYER

Magnehelic Gauges

- Measures positive, negative or differential air, or compatible gas pressure
- Shock resistant, diaphragm-activated mechanism provides reliability and accuracy
- Uses pilot tubes to measure air velocity and static pressure tips to measure static pressure

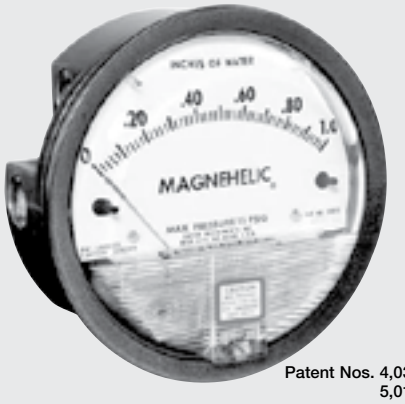

Patent Nos. 4,030,365
5,012,678

Standard Magnehelic® Pressure Gauge has a large, easy-to-read 4" dial.

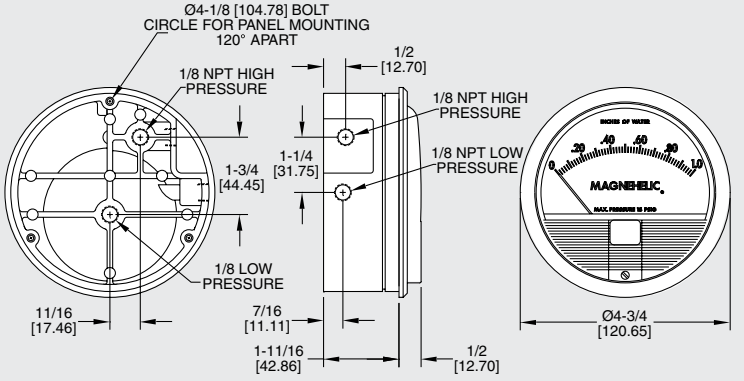

Dimensions, Standard Series 2000 Magnehelic® Pressure Gauges. (Slightly different on medium and high pressure models)

Dual Scale English/Metric Models			
Part #	**Range, IN. W.C.**	**Range, Pa or kPa**	**LIST**
2000-0D	0-0.5	0-125 Pa	$349.00
2001D	0-1.0	0-250 Pa	$391.00
2002D	0-2.0	0-500 Pa	$391.00
2003D	0-3.0	0-750 Pa	$403.00
2006D	0-6.0	0-1.5 kPa	$407.00
2008D	0-8.0	0-2.0 kPa	$325.00
2010D	0-10	0-2.5 kPa	$299.00

Please check your local branch for more models and pricing.

CHARGING HOSES

YELLOW JACKET

Yellow Jacket Plus II 1/4" Charging Hoses with new double barrier protection

Length	Plus II Hoses - standard 1/4" fittings				LIST 3-Pak
	Yellow	Blue	Red	3-Pak	
36"	21036	21236	21636	21983	$223.90
48"	21048	21248	21648	21984	$258.70
60"	21060	21260	21660	21985	$278.50
72"	21072	21272	21672	21986	$315.00
96"	21096	21296			$135.60
12'	21112				$229.40
50'	21150				$666.00
100'	21200				$1,298.00



SealRight Fittings -

- Immediately traps refrigerant in the hose when disconnected, helping meet non-venting regulations and prevent finger burns

45° SealRight fitting at one end				LIST 3-Pak
Yellow	Blue	Red	3-Pak	
22036	22236	22636	22983	$295.00
			22984	$330.00
22060	22260	22660	22985	$346.00
22072	22272	22672	22986	$382.00
22096			22988	$478.00
22112				$229.40

FlexFlow Valve -

- Zero restriction for maximum refrigerant flow - ideal as recovery hose
- Flexible length of hose between valve and fitting makes access easier to tight areas

FlexFlow valve 6" from angle end 3-Pak	LIST
25983	$463.00
25984	$498.00
25985	$533.00
25986	$571.00

Yellow Jacket Premium 6" FlexFlow Adapter Hoses



An easy way to retrofit existing Plus II hoses with FlexFlow capabilities. Flexible hose between valve and fitting provides convenient handling in tight areas.

Length	Description	LIST
25002	1/4" yellow FlexFlow adapter	$116.60
25202	1/4" blue FlexFlow adapter	$120.30
25602	1/4" red FlexFlow adapter	$120.30
25980	3-pak: 25002, 25202, 25602	$350.00
26002	3/8" heavy duty FlexFlow adapter	$167.90

Yellow Jacket Plus II Heavy Duty Charging Hose

- 900 psi working pressure; 3500 psi burst
- Pulls 75 micron vacuum or better on 36" hose



Length	HCA Hose Str. x Angle	LIST
36"	15036	$108.30
48"	15048	$123.00
60"	15060	$133.40
72"	15072	$148.50

Heavy Duty Plus II 3/8" Combination Charging / Hi-Vacuum Hose



Pull a vacuum much faster with this 5/16" I.D. heavy duty hose than with the 1/4" hose.

- Working pressure 500 psi; 2000 psi burst

Length	3/8" fl. str. x 3/8" fl. str.	LIST
36"	15636	$154.60
48"	15648	$176.90
60"	15660	$190.60
72"	15672	$211.40
96"	15696	$265.80
25'	15725	$634.00
50'	15750	$1,176.00
100'	15799	$2,259.00

CHARGING HOSES

YELLOW JACKET

3/8" Standard "B" Charging Hose



- Working pressure 400 psi; 1600 psi burst

Length	3/8" fl. str. x 3/8" fl. str.	LIST
36"	14536	$129.90
48"	14548	$145.60
60"	14560	$159.80
72"	14572	$175.20
96"	14596	$206.40

Heavy Duty Plus II 1/2" and 5/8" Combination Charging / Hi-Vacuum Hose

- 500 psi working pressure; 2000 psi burst. 1/2" and 5/8" I.D. hose



Length	"C" 1/2" fl. x 1/2" fl.	LIST	"D" 5/8" fl. x 5/8" fl.	LIST
48"	15848	$63.80		
60"	15860	$292.60	16060	$309.00
72"	15872	$324.00		
96"	15896	$380.00		

Black only. Longer lengths available.

Automotive Manifold Hoses for 134a Systems

Plus II hose wih Acme fittings

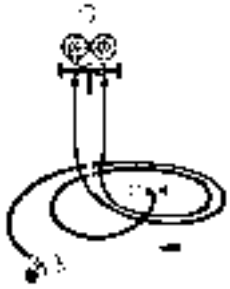

Length	Yellow 1/2" fe. Acme x 1/2"fe. Acme	Red 1/2" fe. Acme x 14mm male	Blue 1/2" fe. Acme x 14mm male	LIST 1/2	LIST 14mm
36"	27436-RIT	27636-RIT	27236	$211.60	$89.50
60"	27460-RIT	27660-RIT	27260	$225.20	$141.80
72"	27472-RIT	27672-RIT	27272	$232.60	$151.30

Yellow Jacket Stainless Steel Hi-Vacuum Hose with brass quick coupler

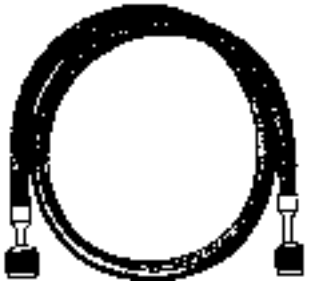

Length	3/8" Str. x 45° 3/8" I.D.	LIST
36"	81736	$766.00
48"	81748	$842.00

Other lengths available.

Length	1/2" Str. x Str. 1/2" I.D.	LIST
60"	81860	$839.00

Cylinder Valve Hoses with finger tight drum fitting

Length	UPC #	LIST
72"	18072	$136.50

Cylinder Valve Adapter

Finger tight adapters fit 125 and 145 lb. cylinders

UPC #	Description	LIST
19105	3/4" NPS finger tight cylinder adapter with 1/4" male flare	$62.40
19106	3/4" NPS finger tight cylinder adapter with 3/8" male flare	$48.20

REFRIGERATION OILS

C-3, C-4, C-5 Mineral Refrigeration Oils



These are mineral naphthenic lubricants manufactured by Calumet
C-3 (R015) = 150 SUS C-4 (R030) = 300 SUS C-5 (R050) = 500 SUS
These are specifically designed for today's high performance air conditioning and refrigeration compressors. Use of these oils will insure continued efficient operation, providing the important properties required from an efficient refrigeration oil.

Part #	Size	LIST
4303-07	C-3 1 gallon	$109.10
4304-07	C-4 1 gallon	$109.10
4305-07	C-5 1 gallon	$108.90

Zerol Alkylbenzene Refrigeration Oil



Zerol Refrigeration Oil is a high-quality, synthetic alkylbenzene refrigeration oil.
Zerol 150 = 150 SUS Zerol 200TD = 200 SUS Zerol 300 = 300 SUS
Zerol Refrigeration Oil is recommended for use in all refrigeration and air conditioning applications using CFC and HCFC refrigerants. It is highly recommended by refrigerant and compressor manufacturers for use with R401A, R401B, and R402A. It provides many distinct advantages: excellent miscibility, excellent thermal stability, compatibility with mineral oils, and it is an excellent clean-up / flushing oil.

Part #	Size	LIST
4308-07	Zerol 200TD -1 gal.	$223.90
4310-07	Zerol 150 - 1 gal.	$246.20
4311-07	Zerol 300 - 1 gal.	$273.90

Polyol Ester Oil

Polyol ester oil is OEM approved by many compressor manufacturers. On all products the numbers 22, 32, 46, 68, 100, 220 refer to the viscosity of the oil. The letter following the number designates the following:
CF = Copeland formulation
S = Standard solubility
H = High solubility
22 N = Special designation - McQuay
HP = Special for Carrier Internally Geared Chillers



Part #	Emkarate Grade	Size	LIST
4314-66	RL-3MAF (Copeland)	gallon	$421.00
4314-46	RL32H (Carrier, D/B, McQuay)	gallon	$415.00
4316-46	RL68H (Carrier, York)	gallon	$466.00
4317-66	RL100E (Carlyle, Sabroe)	gallon	$546.00

ACID TEST KITS

Nu-Calgon Phase III Refrigeration Oil Test Kit



Disposable test kit that provides proof-positive that acid level in refrigeration oil is safe or unsafe. It can be used on mineral oils, alkylbenzene oils and polyol esters. Phase separation makes it easy to see change in colour of acid indicator (even if a leak detection dye has been added to the oil). Just two bottles to work with. No glass to break open. Simple. Safe. Accurate.

Part #	Size	LIST
4320-W8	1 each	$63.40

Nu-Calgon Rx-Acid Scavenger



A better, more convenient way to neutralize or "scavenge" acid in refrigeration, air conditioning systems...after burnouts or during normal on-going system maintenance. Normal dosage rate is 2 fl. oz. of Rx-Acid Scavenger for every one gallon of system oil...50% less than other acid neutralizing products. This "low treat" feature means far less material has to be added to the system. In addition, the Rx-Acid Scavenger can be used with all lubricants...mineral, alkylbenzene and polyol ester. This means only one product in the tool box or on the truck for all acid neutralizing needs.

Part #	LIST
4301-02	$90.10
4301-05	$95.60

Sporlan TA-1

Designed to Test Mineral, Alkylbenzene and POE Lubricants

- **Thoroughly field proven**
- **Takes the guesswork out service of work**

Part #	LIST
TA-1-SPO	$73.40



TA-1

Design Benefits

- **Builds Customer Confidence –** Show the test results of the acid test kit to customers, or perform the test in their presence. In this way they realize you are using the most up-to-date scientific method for system maintenance. Showing customers the test results will also help to convince them to spend the money necessary to do a proper clean-up job. Customers who are thoroughly confident of your abilities will be more interested in establishing preventive maintenance programs.
- **Accurate and Reliable –** Using a simple, scientific method, you can precisely measure the amount of acid in a lubricant sample taken from a contaminated system. The test procedure has been proven by extensive field experience.
- **Convenient -** The TA-1 has pre-measured solutions supplied in bottles with screw caps for easy handling. Kit may be used on the job site, or a lubricant sample can be saved and tested in the presence of the equipment owner.
- **Lubricant Sample Used for Test –** Since lubricant is the scavenger, it gives the best indication of acid in the system. Less than an ounce of lubricant is required.
- **Quick to Use –** Once the lubricant sample is obtained...it will take only minutes to perform the test. Simply mix the solutions and lubricant to be tested. Shake, and the resulting color tells the complete story.

The TA-1 is normally used on a “pass or fail” basis

For complete information see your Sporlan Wholesaler, our website at www.sporlan.com, or write Sporlan and request Bulletin 40-10.

REFRIGERANT LEAK SEALANT

Nu-Calgon A/C EasySeal

A/C EasySeal is designed to prevent as well as repair leaks anywhere in the system, including condensers, evaporators, copper lines, and soldered joints. It is easily injected into the system, traveling with the refrigerant, searching for leaks. The fact that A/C EasySeal travels with the refrigerant is very important to its ability to find leaks faster, using less sealant than those sealants designed to mix and travel with the systems oil.



- Prevents refrigerant leaks and seals existing leaks in air conditioning and refrigeration systems permanently
- Eliminates expensive leak search and repair
- Travels with refrigerant to find leaks fast
- Utilizes a reusable hose



Part #	Description	LIST
4050-01-CAL	1.25 oz. Can	$140.40
4050-02-CAL	2-Pack Kit	$458.00
4050-06-CAL	3 oz. Can	$200.20

Nu-Calgon EasySeal Direct Inject

EasySeal Direct Inject is a new generation of sealants. Its patent pending injection method makes it easier to install than other sealants. With this new injection system, pumping down the unit is a thing of the past. And now the industry's leading refrigeration sealant has been combined with UV leak detection dye to give you EasySeal Direct Inject-UV. This product is designed to seal leaks and also show where larger leaks are with the use of a UV light



4050-15



4050-08

- Concentrated formula means less material in system.
- Clear tube so you can see the sealant go in.
- No need to pump down R-410A units.
- Perfect for split systems, heat pumps, microchannel coils, packaged units, and mini splits.
- No injection hose or caulk gun needed.
- One time use.

Part #	Description	LIST
4050-05	Inject-SS	$166.10
4050-08	Direct Inject	$215.50
4050-11	Direct Inject - UV Dye	$219.90
4050-12	Direct Inject - UV Dye 6PK	$1,191.00
4050-15	UV Leak Detection Kit	$122.60

Nu-Calgon A/C EasyDry

A/C EasyDry eliminates moisture in the system

- Treats up to 5 ton systems
- Compatible with all oils and refrigerants
- Prevents acid from forming
- Compliments the system's drier

Part #	Description	LIST
4051-06	3 oz. Can	$170.30
4051-99	Piercing Valve & Hose	$58.20



Moisture is a problem for any system and a concern of all technicians. If it is not removed, acids as well as corrosion and other problems can trouble the system and the compressor.

Diversitech Flex Inject Sealant

With no tools or gauges required, the Flex Inject sealant works by traveling through the system with the oil and refrigerant fixing leaks immediately. Flex Inject works with all compressors, heat pumps, condensers, and other system components and it will not plug up manifold gauges, metering devices, thermostatic expansion valves (TXVs), pistons or cause cap tube blockages. It meets the ASHRAE ARI 700 refrigerant standard and is compatible with any refrigerant including R-410A with no pump downs or recoveries required. Flex Inject is suitable for use in aluminum and copper coils and is microchannel friendly.



Part #	Description	LIST
995	Flex Inject Sealant Total with UV dye for systems up to 6 tons.	$317.00

REFRACTOMETER, REFRIGERANT TESTER, OIL ADDITIVE

Nu-Calgon Oil Refractometer



A precision optical instrument that allows for the rapid and accurate determination of the refractive index of liquid solutions. It will specifically assist in determining the percent residual of oil remaining in a refrigeration system when converting it to a new refrigeration oil. Such retrofits require converting the mineral oil to a polyol ester (POE) or polyalkylene glycol (PAG), and alkylbenzene lubricant (Zerol) to a POE, or a mineral oil to an alkylbenzene.

Part #	LIST
4815-0	$1,112.00

Checkmate Contamination Detector Kit



- Simple ready to use
- Quick, accurate test results
- Detector tubes calibrated to ARI standards
- The proper and correct method for checking refrigerant gas purity

Part #	Description	LIST
RT700K	Starter Kit (3 Acid tubes, 3 Moisture tubes, 1 metering unit, 1 case)	$676.00
RT750A	Detector Tube - Testing for Acidic "Refrigerant Gas"	$70.70
RT751M	Detector Tube - Moisture Analysis "Refrigerant Gas"	$70.70
RT752C	Detector Tube - The Easy Oil Test - Determining the level of Compressor Oil Contamination in Mineral, AB, PAG or POE oils	$95.30

Supco "88" Oil Additive



The only formula approved and accepted by the Refrigeration industry. Supco "88" is a special oil additive formula designed to be added to refrigeration oils. Compatible with all refrigerants and acts as a special agent. It is "liquid dynamite" and ready for action in every compressor and motor. Supco "88" is used in hermetic, belt driven and automotive compressors. Supco "88" is also used for expansion valves, capillaries, autos, trucks, lawn mowers, inboard and outboard engines and is a powerful penetrating oil.

Part #	Size	LIST
S-8	16 oz.	$34.20

OIL PUMPS

Change Oil Pump



- Removes oil from compressor, marine engines and other equipment
- Pumping capacity is 10 strokes per quart
- Suction tube is 5/16" x 15" but lengths up to 60" can be used
- Not designed to operate under pressure

Part #	LIST
1751	$257.20

Ritchie Max-Flow Deluxe Oil Pump



Improved for added reliability and a more powerful stroke, the Max-Flow deluxe oil pump is a high capacity unit for quick charging. Pumps 3.8 oz per stroke.

- Foot stand base provides support and leverage while pumping against the high pressure of a running compressor
- Fits all size oil containers
- Operating unit in reverse with adapter hose accessory removes oil from equipment quickly and efficiently

Part #	LIST
77930	$596.00

J/B Max-Flow Combination Oil Pump



- Designed to pump oil into the system while unit is operating without shutting down for charging.
- The universal tapered rubber adapter is designed to fit all 1, 2-1/2, and 5 gallon containers without additional adapters.
- Works against 200 psi of pressure and is compatible with all oil types including synthetic, mineral, and polyolester.
- Pumps 2.6 ouces (78 ml) per stroke.

Part #	LIST
T30251-JBI	$389.00

CanVerter

Remove oil from hermetics in minutes with the CanVerter. Easy to operate. Simple - Durable - Inexpensive. Can be used to remove and add oil. Retrofitting to HFC & HCFC's has been made easy with CanVerter.

Now even the smallest refrigeration system can be converted with ease to the new refrigerants. CanVerter eliminates the need to remove the compressor from the system when retrofitting.

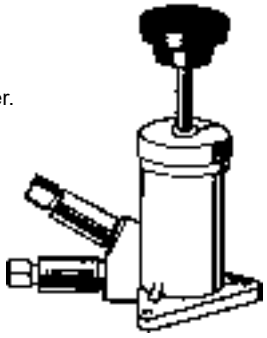

Part #	LIST
4814-0	$382.00

RECOVERY UNITS

FIELDPIECE

MR45 - Digital Recovery Machine

Smart, variable speed one horsepower motor

- Protects from voltage drop (runs as low as 95 VAC)
- Single dial self purge
- Twice the RPMs (3,000) and twice the horsepower (1HP) with DC Motor
- Extra large condenser cools faster, especially on hot days
- Only 22 lbs
- Water resistance to withstand direct rain
- Easy access ports
- Long life and low friction with ceramic cylinders
- Dual cylinder compressor
- Easy hose connections and built in power cord storage
- Large backlit display with status messages



Part #	Description	LIST
MR45	Fieldpiece Digital Recovery Machine	$3,289.00

RECOVERY UNITS

INFICON

Vortex Dual Refrigerant Recovery Machine



REFRIGERANTS:
Recovers commonly used CFCs, HCFCs, and HFCs including blends such as R410A. Safe for use with A2L refrigerants like R32 and R1234yf.
WEIGHT: 29.75 lb. (13.5 kg)
HIGH-PRESSURE SHUT-OFF: 550 psi
COMPRESSOR: 1 HP dual piston

Representative Refrigerant	Category	Push-Pull Rate	Liquid Rate	Vapor Rate
R134a	III	7.57	2.49	0.22
R22	IV	11.81	3.64	0.29
R410A	V	11.33	4.80	0.29

- Dual head compressor for industry-leading recovery rates
- 1 HP motor delivers high torque and power
- Brazed aluminum micro channel condenser provides greater heat transfer
- Smaller overall package than previous generation Vortex AC
- Includes carrying strap and filter/dryer
- Large 2 in. (5 cm) replaceable gauges
- Simple two valve operation
- Industry-leading three year replacement warranty

Part #	Description	LIST
714-202-G1	Base unit 115 volt operation. Includes shoulder strap, 6 foot power cord, and user manual.	$2,974.00

YELLOW JACKET

95762 Refrigerant Recovery System



- Fast recovery of Class II, III, IV and V refrigerants including R-410A.
- Patented single valve control for easy changeover from liquid to vapor to purge.
- Lightweight case designed for easy carrying.
- Automatic stop at 15” of vacuum and automatic restart if pressure rises.
- CPR valve to regulate refrigerant input and protect the life of the compressor, and your investment.
- Auto purge to clear residual refrigerant for quick change from one refrigerant to another. Auto purge clears residual refrigerant for quick change from one refrigerant to another.
- Oil-less compressor to eliminate oil maintenance.
- 3 year compressor warranty.

Recovery Ratings per UL* ARI - 740-98 Vacuum Level: 15 inHg						
	Lbs./min			Kg./hr.		
	Vapor	Push/Pull	Liquid	Vapor	Push/Pull	Liquid
R-12	0.37	12.81	1.98	10.2	348.6	54
R-22	0.37	12.81	1.98	10.2	348.6	54
R-500	0.37	12.81	1.98	10.2	348.6	54
R-502	0.66	12.9	2.65	18	351	72
R-134a	0.37	12.81	1.98	10.2	348.6	54
R-410A	0.42	11.6	1.68	11.4	315.6	45.6

*UL and ARI tests are only one way to evaluate recovery speed, and rates are a “level field” comparison method. In other testing conditions, units can exhibit much higher rates.

Specifications - RecoverXLT	
Capabilities	Vapor, liquid, push/pull
Compressor	1/2 hp, oil-less
Weight	32.6 lbs. (14.78 kg)
Size	19.3 x 12.4 x 12.5” (490 x 315 x 317 mm)
Refrigerants	12, 22, 134a, 407C, 410A, 500, 502, HP, MP, Blends
Electrical	115/60 Hz
Overfill shut-off	Standard on 95762
Warranty	3 years compressor; 1 year parts and labor

Part #	Description	LIST
95762	RecoverXLT Refrigerant Recovery Machine with Tank Overfill Switch (TOS)	$4,929.00

RECOVERY UNITS

YELLOW JACKET

95760 RecoverXLT Refrigerant Recovery Machine

- Single valve control for easy changeover from liquid to vapor to purge
- Robust compressor design for fast recovery of liquid and vapor refrigerant
- Recovers refrigerant and shuts off when unit reaches 15″ of vacuum – works on even the largest systems (over 200 lbs. of refrigerant) while 608 compliant (for the listed refrigerant classes)
- Quiet running with components nested to reduce vibration and noise.
- Controls and gauges inset for protection and angled for easy access and viewing
- Senses back pressure from tank and shuts off automatically at 517 psi for safety
- Reusable mesh particulate filter inserts into suction port for protection. Simple cleaning eliminates replacement due to clogging
- ”On-the-fly” purge with simple turn of a knob to remove residual refrigerant and help prevent cross-contamination
- High efficiency fan keeps air moving across condenser for cool running even in hot weather
- High strength HDPE case for lightweight and rugged use. Rounded corners help protect from nicks and scrapes
- Single high pressure safety switch – external circuit breaker
- Includes three-year compressor warranty on domestic models (one year on international models)



Part #	Description	LIST
95760	RecoverXLT 115V/60 Hz	$4,480.00

APPION

G5Twin Refrigerant Recovery Machine

Features:

- Compact and lightweight: Weighs only 24 lbs
- Twin Cylinders and Twin Condensers for ultra fast recovery
- Refrigerant-Isolated Crankcase, eliminating bearing contamination
- Pumps R410A liquid and vapor
- 7-inch 10-blade turbine fan @ 3000 rpm blasts 600 cfm of cooling air over the twin heads and condensers
- Operates up to 50°F cooler for maximum reliability and speed even in high ambient conditions
- Recovery Rates of 0.62 lbs./minute vapor and 10.36 lbs./minute of liquid (ARI 740-98 Ratings R22)



Compatible Refrigerants (per AHRI standard 740-98)	For use with all class III, IV, and V refrigerants: R-12, R-134a, R-401C, R-406A, R-500, R-401A, R-409A, R-401B, R-412A, R411A, R-407D, R-22, R-411B, R-502, R-407A, R-402A, R-408A, R-509, R-407A, R-404A, R-402A, R-507, R-407B, R-410A
Power	115 VAC, 60 Hz, 10 Amps
Recovery Rate	0.62 lbs./minute vapor 10.36 lbs./minute of liquid (ARI 740-98 Ratings R22)
Dimensions	13.75 x 9.4 x 10.3 in.

Part #	LIST
G5TWIN	$2,871.00

CFC REFRIGERANT RECOVERY CYLINDERS

To Convert to Refrigerant Capacity:

Refrigerant fill weight is 80% of water capacity. Determine cylinder fill weight as follows: Maximum Allowable Gross Weight = (.08 Water Capacity Weight + Cylinder Tare Weight including valve)

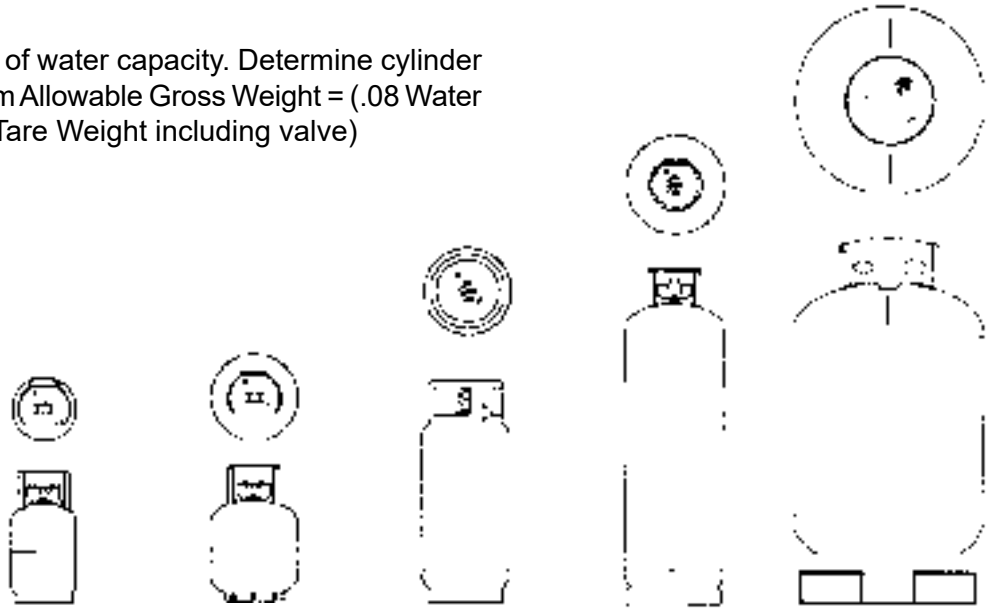

	*T-30-400	*T-50-400	*T-100-400	T-200-260	T-1000-260
Water Capacity, lbs.	26.2	47.7	92	239	1000
Cylinder Diameter	9-1/16	12-3/8	12	14-3/4	30
Overall Length (OL)	17-11/16	18-3/4	30-3/16	49	58-1/4
Tare Weight (lbs)	13.7	25.5	44.8	86	342
Spec.	DOT-4BA400	DOT-4BA400	DOT-4BA350	DOT-4BW260	DOT-4BA350
LIST	$317.00	$391.00	$1,081.00	$1,461.00	$3,020.00

† Have working pressure of 400lbs. * **400 PSI Pressure Rated for R410A Use**

Electronic Tank Heater Blanket

Refrigerant Tank Heater Blanket speeds up recharging time. Assures total discharge of refrigerant from 30 lb and 50 lb tanks. Heats tanks to 125˚F.





Part #	LIST
98250	$524.00

VEHICLE RACKS AND EQUIPMENT

Tank transportation units for service vehicles

- Refrigerant unit for 4 small tanks 14”D x 10.5”W x 43”H
- Heavy duty, lightweight aluminum



Part #	LIST
RS-4S-SFO	$2,053.00-

- Refrigerant unit for 3 large tanks – 14”D x 13”W x 43”H
- Heavy duty, lightweight aluminum



Part #	LIST
RS-3L-1-SFO	$2,073.00

- Refrigerant unit for 3 large and 2 small tanks – 14”D x 13”W x 62.5”H
- Heavy duty, lightweight aluminum



Part #	LIST
RS-5L-1-SFO	$2,808.00

- Refrigerant unit for 5 small tanks – 14”D x 10.5”W x 62.5”H
- Heavy duty, lightweight aluminum



Part #	LIST
RS-5S-1-SFO	$2,808.00

- Horizontal refrigerant tank holder 12.5”D x 48”W x 13”H – Aluminum
- Holds 4 tanks side by side



Part #	LIST
6020	-

- 2 level adjustable tank holder
- Aluminum



Part #	LIST
6010	$716.00

- Aluminum B-Tank holder c/w strap and hood



Part #	LIST
6086	-

- Aluminum Nitrogen tank holder c/w straps and hood



Part #	LIST
6088	-

Vehicle Security Locks

- High Security Stainless Steel Tufloc - set of 2 keyed alike.
- c/w stainless steel installation hardware.



Part #	LIST
50-3-KA2	

Service Van Equipment

- Transport tube door and mount kit – cast aluminum. Complete with stainless steel hardware and straps. For 6” dia. pipe (pipe not included)



Part #	LIST
6079	$517.00

LORDCO

Hockey Puck Door Lock



Part #	LIST
THPXL	$120.00

LORDCO

Internal Shackle - HASP



Part #	LIST
THSP2C	$101.60

VACUUM PUMPS

J/B Vacuum Pumps

- 2-Year Warranty



Part #	CFM	# of Stages	Ultimate Vacuum	Pump Speed	Motor	Voltage	LIST
DV-6E	6	2	25 microns	1725	1/2 HP	115 volt, 60 HZ	$1,393.00
DV-200N	7	2	25 microns	1725	1/2 HP	115 volt, 60 HZ	$1,968.00
DV-285N	10	2	25 microns	1725	1/2 HP	115 volt, 60 HZ	$2,686.00

Inficon Vacuum Pumps



Part #	CFM	# of Stages	Ultimate Vacuum	Motor	Voltage	LIST
700-100-P1	5	2	15 microns	1/2 HP	110/220V	$996.00

Yellow Jacket Vacuum Pumps

- Two stage design
- High efficiency
- Vacuum indicator gauge
- Heavy duty torque motor
- Gas ballast
- Low operating temperature
- Large oil reservoir





Part #	CFM	# of Stages	Factory Micron Rating	Intake Fitting	Oil Capacity	Motor	Voltage	LIST
93760-RIT	6	2	15	1/4 x 1/2" MFL	36 oz.	1/2 HP	115V 60 Hz	$2,482.00
93780-RIT	8	2	15	1/2 X 3/8 X 1/4MF	28	1/2 HP	220V 60 Hz	$2,754.00
SuperEvac Pump For Ammonia Systems								
93530-RIT	8	2	15	1/2" Male Pipe	43 oz.	1/2 HP	115V 60 Hz	$5,895.00
93860-RIT	Yellow Jacket SuperEvac Low Side Gauge Mount X 1/2" Female Flare 2 Valve Manifold							$645.00

Nu-Calgon Vacuum Pump Oil

Vacuum pump oil is a quality blend of high-grade lubricants, providing for a multi-viscosity oil that performs at the deepest vacuum. It cleans and lubricates to minimize wear and provide surface protection.



Part #	Size	LIST
4383-34	Pint	$32.20
4383-24	Quart	$50.20
4383-07	Gallon	$119.00

J/B Vacuum Pump Oil

Black Gold Vacuum Pump Oil is extremely pure and non-detergent. It is hydro processed, meaning it goes through a series of catalytic steps rendering the oil extremely refined, more viscous, and more stable.



Part #	Description	LIST
DVO-12	12-Quart	$41.90
DVO-24	24-Quart	$129.20
DV-T1	Tank oil caddy	$116.00

Appion TZMGLN Micron-Dry Oil

- Hydrophobic formulation repels moisture and dirt
- Synthetic blend improves vacuum pump performance



Part #	Description	LIST
TZMGLN	1 Gallon	$136.10

Fieldpiece Vacuum Pump Oil

- For use with VP55 and VP85 Vacumum Pumps
- Highly refined and optimized for top performance



Part #	Description	LIST
OIL32	1 Quart	$44.50

REFRIGERANT SCALES

INFICON Wey-TEK Refrigerant Charging Scales

Wireless w/ app

- 115 kg / 250 lb. capacity
- Display: User-provided smart phone, Android or iOS or optional handpiece
- User-programmable alarm mode to indicate when target charge reached
- Up to 90 hours of battery life from 4 “AA” alkaline batteries (included)
- Measures in kg, lb./oz., oz., or lb.
- Automatic and manual zero
- 0.25 oz. (10 g) resolution
- Wireless and app-based versions work via Bluetooth
- 2 year replacement warranty



719-203-G1

Part #	Description	LIST
719-202-G1	Wey-TEK HD Wireless Base Model	$633.00
719-203-G1	Wey-TEK HD Wireless Base with Optional Handpiece	$1,071.00



Wey-TEK features a weighing platform constructed of two sturdy metal plates. It provides the durability that enables you to take it anywhere you would take your toolbox. Moreover, Wey-TEK comes with a plastic carrying case for even greater protection and convenience.

- Measures in lb./oz., kg, or lb.
- Large LCD for easy viewing, even in direct sunlight

Part #	Description	LIST
713-202-G1	Wey-TEK scale 220 lb. (100 kg)	

Fieldpiece Wireless Scale

This scale combines modern wireless electronics and rugged materials to perform at the high level HVAC contractors demand. The platform is made of thick aluminum to maintain accuracy over the life of the product while rubber pads and bumpers cushion both the tank and the scale itself.



Part #	LIST
SRS3	$1,113.00
SR47-FLP	

Yellow Jacket Charging Scale with Bag

- Compact and lightweight
- Rugged, low profile design
- Maximum weight: 220 lb. (100 kg)
- Large, backlit LCD
- Control module with six foot cord stores under scale when not in use



Part #	LIST
68862	$886.00

REFRIGERANT LEAK DETECTORS

INFICON

D-TEK Stratus



D-TEK Stratus combines the excellent leak detection of D-TEK Select and the cloud hunting capability of a large portable monitor all in one hand-held unit. Quickly locate the area containing the leak using the large, easy-to-read LCD display, and then pinpoint the leak with one instrument! D-TEK Stratus is the next big thing in refrigerant leak detection.

FEATURES

- Sensitivity of 0.03 oz./year (1 g/year)
- Innovative cloud hunting mode with ppm readout helps locate leaks faster than ever
- Cloud hunting and pinpoint modes is like having two leak detectors in one
- New lithium ion battery- Quick charge capability- Easy field replacement
- Detects all CFCs, HCFCs, HFCs, and HFO
- All new, redesigned infrared sensor
- Automatic and manual zero modes
- Sensitivity will not degrade over time

Part #	Description	LIST
724-202-G1	D-TEK Stratus Leak Detector	$3,679.00
721-702-G1	D-TEK Stratus Battery	$269.10
721-610-G1	D-TEK Stratus Charging Cradle	$241.10

TEK-Mate



FEATURES

- Heated diode sensor.
- Variable-intensity audible signal and single flashing LED.
- Automatic background compensation for changing background “noise.”
- Uses 2 (D) alkaline batteries
- 2-year Warranty

Part #	Description	LIST
705-202-G1-INF	TEK-Mate	$777.00
703-020-G1-INF	Sensor	$176.50
705-600-G1-INF	Filter Kit	$63.10

D-TEK 3



FEATURES

- Low, Medium, High, and Super sensitivity settings
- Automatic and manual zero modes
- Rugged carrying case included
- Detects all CFCs, HCFCs, HFCs, HFOs, and blends (including A2Ls)
- Detects CO2 with optional CO2 sensor
- Optional extra-long probe for hard-to-reach areas
- Two year replacement warranty

Part #	LIST
721-202-G1	

Whisper Ultrasonic Leak Detector



Whisper Ultrasonic Leak Detector allows the user to check for pressure and vacuum leaks where other sniffer style leak detectors can't go. With the unique internal noise control circuitry, the technician can operate Whisper in high noise environments. The ergonomic design gives the user the convenience of one-hand operation and carries a two-year replacement warranty.

- Detects pressure and vacuum leaks for all gases
- Laser pointer makes it easier to pinpoint the leak
- Only technology to detect pressurized nitrogen leaks

Part #	LIST
711-202-G1	$981.00

COMBUSTION ANALYZER

TESTO

Testo 300 Series Flue Gas Analyzer Kit



The testo 300 flue gas analyzer is ideal for the most important measurements involving heating systems. It combines decades of experience in measuring technology with contemporary smart-touch operation, robust construction and e-mailing of reports. The testo 300 enables easy measurement of flue gas, draught, pressure, ambient CO and differential temperature.

- Intuitive measurement menus and the fast-response Smart-Touch display ensure easy operation – as on your smartphone
- Including O2 and CO sensor up to 4,000 ppm
- Large 5-inch HD display – see all the system's measuring values at a glance

Part #	Description	LIST
0564-3002-83	testo 300 analyzer kit with printer	$6,607.00
0564-3004-79	testo 300 longlife analyzer kit	$7,743.00

Testo 310 Series Combustion Analyzer Kit



With its capability to perform both basic, or more complex flue gas analysis, maintenance or safety checks, or confirm furnace efficiency, the fully featured Testo 310 combustion analyzer delivers more combustion parameters. The stainless steel probe and cone-stop is perfect for residential, and boiler applications.

- Direct O2, CO, flue gas and ambient temperature measurements
- Integrated measurement menu for flue gas/draft/CO ambient air and pressure
- Quick sensor zero in only 30 seconds
- Large, backlit digital display, rechargeable lithium battery with up to 10 hours life

Part #	LIST
0563-3100-01	

Testo 310 Series Residential Combustion Analyzer Kit



The testo 310 residential combustion analyzer sets a new standard in affordable combustion analysis with its rugged housing, simple design, and advanced sensor technology. With five different fuels to select from, it provides the flexibility you need for applications like checking furnace efficiency, boiler tuning, and water heater checks.

- Simultaneous measurement of O2, CO, and flue gas and ambient temperatures
- All the measurements you need, including draft and pressure
- Bright backlit 2-line display and icons for easy viewing
- Fast 30-second startup so you can get testing quickly

Part #	LIST
0563-3110-01	

ULTRAVIOLET LEAK DETECTION SYSTEM

SPECTROLINE

EZ-Ject™ Complete Kit

The revolutionary way to add fluorescent dyes into air conditioning and refrigeration systems — without the use of additional refrigerant, manifold and additional hoses

- No pouring and no refrigerant required for injection.
- One calibrated cartridge provides exact dosing for multiple systems.
- Easily overcomes system pressure. Inject dye with a turn of the handle.



Part #	LIST
SPE-HVLEZE	$696.00

EZ-Ject™ Fluorescent Dye Injection Kit

- (2) SPE-EZ5E 0.5 oz (15 ml) universal/POE dye cartridges
- EZ-50 EZ-Ject™ dye injector assembly
- EZ-25 8 in (20 cm) EZ-Ject™ hose assembly with low-loss fitting & check valve
- 128186 R-410a adapter



Part #	LIST
SPE-EZ100E-CS	$423.00

EZ-Ject™ Complete Kit

- 0.5 oz (15 ml) universal/POE dye cartridge



Part #	LIST
SPE-EZ5E-CS	$58.80

BigEZ™ Fluorescent Dye Cartridge in Clamshell

- 4 oz (118 ml) universal/POE dye cartridge



Part #	LIST
SPE-BEZ5E-4CS	$498.00

GLO-STICK® 2E Fluorescent Dye Capsule

- 0.5 oz (15 ml) universal/POE dye capsule



Part #	LIST
SPE-GS2E-CS	$53.30

Ritchie Micro LED UV Leak Detector

Use these high visibility lamps to spot leaks on all A/C systems. Individual reflectors surround each of five LEDs recessed for protection in the stainless steel head. **69790** features 3 UV and 2 blue bulbs A/C for detection at greater distances.

69789



Part #	Description	LIST
69789-RIT	Micro UV LED and dye kit for ACR	$623.00

Ritchie New Universal A/C Disposable Injectors

Universal disposable 1 oz. applicator for fast economical dispensing. Universal dye for all common refrigerants and oils. Two 1/2 oz. applications for regular split system or four 1/4 oz. applications for small appliances or auto A/C.

Part #	Description	LIST
69727-RIT	1 oz. (30 ml) injector – single	$93.20

COMBUSTIBLE GAS LEAK DETECTOR

INFICON GAS-Mate

The combustible gas leak detector with high sensitivity and low price.

- Detects natural gas, propane, isobutane, ammonia, hydrogen forming gas (95/5), and more
- Sensitive to 5 ppm methane, R290 (propane), and R600a (isobutane) Small sensor and probe tip permit leak checking in tighter places
- Runs continuously for 60 hours on two alkaline "D" cells
- Auto zeroing for ignoring background gas levels in leak test area
- Maximum set-point and adjustable sensitivity help you pinpoint leaks fast
- Variable audio alarm and flashing LED indicate leak strength
- 3 year replacement warranty



Part #	LIST
718-202-G1	$628.00

GAS & REFRIGERANT DETECTORS

HONEYWELL ANALYTICS

E3Point



Toxic/combustible gas monitor that makes a commercial operation run more intelligently to protect people, property and the bottom line. E3Point is capable of detecting the widest range of toxic and combustible gases found in commercial building spaces and outbuildings, including CO, NO2, O2, H2, H2S, CH4 and C3H8.

It can be used as a standalone unit with single or dual-gas detection (i.e. using a remote sensor) or deployed as a networkable device (interoperable with BACnet, Modbus or other Building Automation System); E3Point also functions with existing controller-based gas monitoring systems and wired-wireless gas monitoring system components.

Features:

- Standalone, standalone with remote (dual gas mode) or network versions available
- Saves energy through Demand Control Ventilation
- Advanced sensing technology detects CO, NO2, O2, H2, H2S, CH4, C3H3

IAQPoint2



Put money in your pocket and fresh air comfort in your building by using demand-controlled ventilation and triple monitoring.

Features:

- Monitor CO2 or VOCs, temperature and humidity
- Menu-driven, customizable, easy-to-navigate display
- Green attributes such as obtaining LEED credits

Quick Specs:

- Response time: T90 < 60 seconds
- Calibration: None required
- Dimensions: 3.0 (w) x 4.6 (h) x 1.5 (d) in. (11.8 x 7.7 x 3.7 cm)

Note: Manning VL - Vent Line Leak Detector, accessories for E3Point are also available, please contact local branch for details.

GAS & REFRIGERANT DETECTORS
HONEYWELL ANALYTICS

301C Controller



Designed for simple installation and operation, the 301C continuously monitors and controls toxic gases, combustible gases and oxygen hazards. Using an addressable RS-485 Modbus communication protocol, the 301C uses daisy chain wiring requiring only 2 pairs of wires to connect up to 96 transmitters on the 3 input channels. This simplifies installation, in turn lowering costs. The 301C's zoning and averaging abilities significantly reduce operational and maintenance costs.

Features:

- User friendly with zero maintenance
- Low installation costs
- Automatic quick self-test and warm-up

301EM Expansion Module



301EM Expansion Module acts as a controller for up to twenty remote refrigerant sensors and detects a wide variety of gases.

Features:

- Easy to read LCD display
- Auto-diagnostic capabilities
- Convenient stand-alone or network operation

Quick Specs:

- Power requirement: 22-27 VAC, 29-38 VDC, 2A max @ 29 VDC
- Size: 11 (H) x 8 (W) x 2.7 (D) in. (28 x 20.3 x 7cm)
- Weight: 2.25 lbs. (1.02 kg)

Note: Accessories for 301C Controller are available, please contact local branch for details.

HONEYWELL ANALYTICS

Flexible Applications

E3Point integrates easily with your building's analog or digital infrastructure as a standalone unit or network addressable device. Here are five installation examples to make E3Point work for you.

E³Point Standalone Single-Sensor Operation

A low-cost application for buildings with minimal gas monitoring requirements typical of a small facility. Offers easy installation, commissioning and operaton. Two on-board relays can activate fan or strobe.

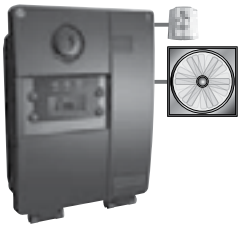

E³Point Standalone Dual-Gas Sensor Operation

Economical application adds option of a second (remote) sensor for dual gas monitoring. Two on-board relays can activate ventilation or strobes.

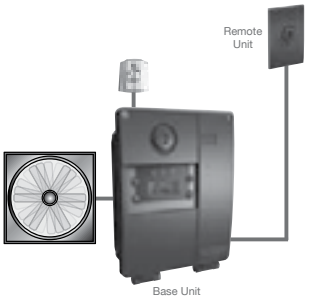

E³Point/Wired-Wireless Hybrid Configuration

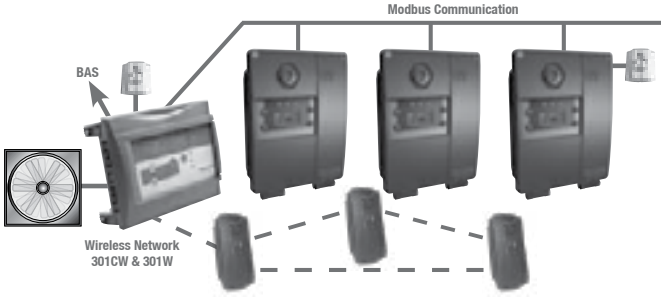

E³Point offers a perfect solution for applications that require a hybrid wireless/wired system. In this configuration, E³Point outputs signals to a controller (301CW) that also accepts signals from a wireless gas detector (301W). This scheme offers great flexibility and installation cost savings for retrofit projects. It easily handles difficult installation challenges, such as those posed by obstructions. A relay output is provided when it is desirable to activate fan/ventilation directly (e.g. when fan is located in close proximity to detector).

E³Point/Modbus Configuration

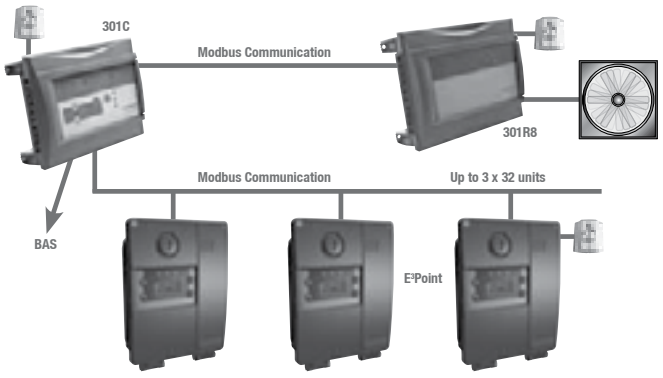

Supports Modbus protocol to daisy-chain E³Point detectors, providing up to 96 points of monitoring on a serial bus. Excellent option for controller-based (VA301C) installations common in larger applications. A relay output is provided as an option for activating ventilation directly (e.g. when fan is located in close proximity to detector).

E³Point/BACnet (MS-TP) Configuration

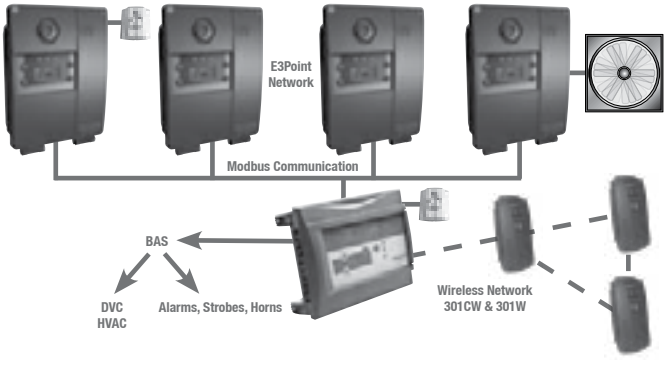

E³Point outputs directly to BACnet or other BAS. Alarms, strobes and horns are activated through BAS with link to DCV/HVAC controls. This system design supports new and retrofit installations for large buildings, and can couple with a controller to effectively integrate wired and wireless system components. A relay output is provided as an option for activating ventilation directly (e.g. when fan is located in close proximity to detector).

DATA LOGGER / RECORDER
ACR

Product Overview



SmartButton
Small and affordable data logger in the ACR Systems lineup. User configurable software, over 2000 readings, 1-year warranty. Typical battery life 10 years. -10 to 85°C

Starter Kit includes: 1 button, software, reader, interface & S-port adapter.

Part #	Description	LIST
01-0182	ACR SmartButton starter kit	
01-0180	ACR SmartButton	





ACR Jr.
Easy to use, low cost data logger. 2 minute fixed sample rate, up to 31,000 readings, 5-year battery, and plugs directly into the serial port of your computer. -40 to 85°C.



Nautilus 85/135
Single-channel, waterproof logger with 8-bit resolution, over 244,000 readings, user configurable sample rate and a 10-year battery (Nautilus 85).
Nautilus 85 measures -40 to 85°C.
Nautilus 135 measures 10 to 135°C



Owl Loggers
Single-channel, user configurable with TrendReader software, over 32,000 readings, 10-year batter, and optical alarming.



SmartReader Loggers
8-bit multi-channel loggers, user configurable with TrendReader software, over 32,000 readings, 10-year battery, network capable, and alarm dial-out/remote access by modem.



SmartReader Plus Loggers
Extra accuracy from 12-bit resolution, user configurable with TrendReader software, fast sampling up to 25/per second, up to 1,000,000 readings, 10-year battery, network capable, and alarm dial-out/remote access by modem.



IAQ Logger
Specialized 8-bit logger for indoor air quality applications. Monitors and records temperature, relative humidity, and CO2 using Telaire 7001 (sold separately). User configurable using TrendReader software, over 32,000 readings, and a 10-year battery.



PowerWatch
Voltage disturbance recorder for monitoring power quality parameters. Continuously monitors 120V or 240V outlets for surges, sags, frequency variations, and outages. Optically isolated communication interface allows easy download of over 4000 events. User configurable using Power-Watch software. 10-year battery.

DATA LOGGER-ALARM
LOGGERFLEX

Bun Hygro: Temperature and Relative Humidity Logger-Alarm



Key Features:

- Wireless Wi-Fi Connection
- Real-Time Temperature & Humidity Alarm
- Automatic Food Safe Inspection Reports

Usages:

- Regular & Walk-In Fridges
- Food & Drug Storage
- Green & Poultry Houses

Part #	LIST
BUN-HYGRO	

Bun Thermo-X: Temperature Logger-Alarm



Key Features:

- Waterproof External Sensor
- Wireless Wi-Fi Connection
- Real-Time Temperature & Humidity Alarm
- Automatic Food Safe Inspection Reports

Usages:

- Freezer Temperature Recorder-Alarm
- Concrete Pouring
- HVAC & Boiler Monitoring

Part #	LIST
BUN-THERMOX	

Bun Multi: Multi-Parameter Logger-Alarm



Key Features:

- AC Current | Pressure | Temperature Alarm
- Wireless Wi-Fi Connection
- Access Online To All The Records

Part #	LIST
BUN-MULTI-T-C	$568.00

Usages:

- Monitoring HVAC Systems
- Monitoring Electro Motors' Health & Performance
- Monitoring Hydraulic & Pneumatic Systems' Health & Performance

Bun Flood: Flood and Leakage Detector



Key Features:

- Text Message & Email Alarm
- Wireless Wi-Fi Connection
- Audible Alarm
- 1.5 m (5 ft.) Sensor Cable
- 90 cm (3 ft.) Non-Sensor Cable

Usages:

- Engine Rooms
- Property Management
- Pipe Burst Detection

Part #	LIST
BUN-FLOOD	

TEMPERATURE LOGGER / RECORDER

SUPCO

CR87B Series
Temperature Recorders



The SUPCO CR87B TEMPERATURE RECORDER with remote sensor employs advanced microcontroller design that enables this versatile instrument to accurately measure and record temperatures in air, gas, liquids, powders, solids, and semi-solids. Recordings can be made from any distance up to 100 feet away by using an optional long length thermocouple wire. (see accessories) Two selector switches located on the face panel allow for the recording of 3 different temperature ranges at 4 different recording speeds.

Specifications:

Temp. scale selectable ..... (Farenheit model) -40° to +30°F, -20° to +50°F, +50° to +120°F
Temp. scale selectable ..... (Celsius model) -40° to 0°C, -30° to +10°C, +10° to +50°C
Ambient operating temp. range ..... +32°F to 120°F (0°C to +49°C)
Relative humidity ..... 96% max.
Temperature accuracy ..... +/- 1°C or 1.8°F
Chart diameter ..... 6 inches
Chart speed selectable ..... 6 hours, 24 hours, 7 days
Chart rotation mode ..... selectable, single turn or continuous
Chart drive ..... 120 VAC
Temperature probe ..... 15' long type J thermocouple w/4" Stainless steel submersible tip
Case size ..... 9-1/4" x 7-1/4" x 2-3/4"
Weight ..... 4 lbs., 7 oz.
Battery back-up life ..... 48 hours - 8 AA alkaline batteries (not included)

Part #	Description	LIST
CR-87B	Fahrenheit	$1,241.00
CR-87BC	Celsius	$1,385.00

Recording Charts for CR87B Recorders

Standard 6" diameter recording charts are available for Fahrenheit and Celsius recorders

Part No.	Rec. Time	Temp. Range
CR87-1	24 HRS	-40° to 30°F
CR87-2	24 HRS	-20° to 50°F
CR87-3	24 HRS	50° to 120°F
CR87-4	6 HRS	-40° to 30°F
CR87-5	6 HRS	-20° to 50°F
CR87-6	6 HRS	50° to 120°F
CR87-7	7 DAYS	-40° to 30°F
CR87-8	7 DAYS	-20° to 50°F
CR87-9	7 DAYS	50° to 120°F
CR87-10	24 HRS	-40° to 0°C
CR87-11	24 HRS	-30° to 10°C
CR87-12	24 HRS	10° to 50°C
CR87-13	6 HRS	-40° to 0°C
CR87-14	6 HRS	-30° to 10°C
CR87-15	6 HRS	10° to 50°C
CR87-16	7 DAYS	-40° to 0°C
CR87-17	7 DAYS	-30° to 10°C
CR87-18	7 DAYS	10° to 50°C

Charts are packaged in quantities of 60 per box
For replacement pens specify.....CR PEN (black)
For replacement probe specify... CR PROBE

SL Series
Mini Data Loggers

Measures Temperature, Humidity and Dew Point simultaneously



Features / Benefits

- Windows™ 98SE, ME, 2000, XP and above compatible software (included) Not compatible with Windows™95 or NT
- PC, delayed start or push button recording control
- Temperature and Humidity alarm with visual indication on demand
- User selectable stop on memory full or memory rollover for continuous recording
- Real time monitoring
- View graph and text simultaneously
- Can calibrate through software
- Displays temperature in °F or °C
- USB Interface standard

Part #	LIST
SL300TH-SUP	$359.00

SL Specifications

	SL300TH
Sample Point Capacity:	43,344 for Temperature only. 21,672 for Temperature, Humidity and Dew Point
Sample Rate:	1 second to 18 hours
Alarms	High and low Temperature and Humidity alarms w/visual indication on demand
Temperature Range:	-40°F to 160°F (-40°C to 70°C)
Temperature Accuracy:	+/- 1°F (+0.5°C)
Temperature Resolution:	0.01°F or 0.01°C
Relative Humidity Range:	0% to 99% RH, non condensing
Relative Humidity Accuracy:	+/-2% RH from 10% to 90% RH
Relative Humidity Resolution:	0.01% RH
Calibration	Single point offset calibration available through software For both Temperature and Humidity
Time Accuracy:	+/- 100 ppm @ 75°F
Dimensions:	3" x 1.6" x 0.6" (7.6cm x 4.0cm x 1.5cm)
Weight:	1.0 oz (28g)
Power Source:	3 V (CR2035) Lithium battery (Included)
Battery Life:	6 years typical

TEMPERATURE ALARMS

SUPCO

TA2 Single Set Point Temperature Alarm



- Adjustable alarm temperature range from -10°F to +80°F (-25°C to +30°C)
- Built-in terminals for remote alarm or telephone dialer connection
- Reliable 120 VAC operation
- Switch provided to activate alarm on either increase or decrease in temperature
- Switch provided to activate alarm with no delay or one hour delay allowing for normal temperature rise during defrost cycles and stocking of refrigerators and freezers
- Power ON indicator light, ALERT warning light and audible warning sound
- Sensor wire can be cut and extended up to 200 feet in field using any standard 22 gauge wire

Model Number	Description	LIST
TA-2	110 VAC Fahrenheit Model	$302.00
TA-2C	110 VAC Celsius Model	$326.00

TA22 Single Set Point Temperature Alarm With Digital Display



Easy to read display shows current Temperature, Alarm Status, Over/ Under mode indicator, Alarm Set Point and Temperature (°F or °C).

- Adjustable range from -40°F to +160°F (-40°C to +71°C)
- Back Lit Display
- 90 db audible alarm

Part #	Description	LIST
TA-22-SUP	120 VAC	$527.00

TA33 Temperature Alarm With Display & Battery Backup



Set your temperature threshold and the TA33 provides reliable protection for your temperature sensitive areas. The battery backup allows continuous monitoring even during power outages. The easy to read display shows current Temperature, Alarm Status, Over/ Under mode indicator and Alarm Set Point and Temperature.

- Adjustable range from -40°F to +160°F (-40°C to +71°C)
- Back Lit Display
- 90 db audible alarm
- Adjustable alarm temperature ranges
- Built-in terminals for remote alarm or telephone dialer connection
- Switch for 'No delay' or '1 hour delay'

Part #	LIST
TA-33-SUP	$551.00

THA2U Temperature Humidity Alarm With Logging Capability



The THA2U is a multi-function product that monitors Temperature, Humidity and Dew Point, provides alarms for out of range conditions and continuously logs data. It consists of a base unit with an easy to read display and a remote sensor probe that can support cable lengths of up to 300 feet.

Part #	Description	LIST
THA2-SUP	120 VAC	

TEMPERATURE ALARMS

SUPCO

TA6 Dual Set Point Temperature Alarm



A single sensor temperature alarm which features two separate colour coded dial controls that allow the user to determine the over and under alarm set points from -10°F to +80°F. A "DELAY" - "NO DELAY" slide switch that can be set for a one hour delay before alarm activation or for immediate alarm activation. Screw type connectors are provided for connection to a remote alarm system or an automatic phone dialing unit. The unique design of the TA6 allows for the probe wire to be cut in the field and extended up to 200 feet using any standard 22 gauge speaker wire.

- Dual settings for over/under temperature alarm variables from -10°F to +80°F (-25°C to 30°C)
- "DELAY" - "NO DELAY" alarm slide switch'
- Remote alarm terminals
- Power "ON" indicator light
- Alert flashing warning light
- Audible alarm beeper
- Reliable 120 VAC operation

Model Number	Description	LIST
TA-6C	110 VAC Celsius Model	$460.00

TA7 Battery Operated Temperature Alarm



An inexpensive temperature alarm for refrigerators and freezers. Ideal for units that are not used daily.

- Adjustable alarm temperature setting from -10°F to +80°F (-20°C to +25°C)
- Uses standard 9 volt battery (not included)
- Slide switch for immediate alarm response of 1 hour delay
- Loud audible alarm
- Sensor wire can be extended up to 100 feet using standard 20-28 AWG speaker wire
- Compact size, only 5-3/4" x 1-1/2" x 1"

Model Number	Description	LIST
TA7	Fahrenheit Model	$143.50
TA7C	Celsius Model	

Wet Switch Flood Detector



- Solid state control designed to help prevent flooding.
- Turns system off when detecting moisture due to condensate or drain leaks.

Model Number	Description	LIST
WS-1-ALL	Wet Switch Flood Detector	$208.80

THERMOMETERS

COOPER-ATKINS

Vapor Tension Thermometers

Used in many HVAC / R applications, these units are the perfect choice for use in walk-in refrigerators, tanks, refrigerated display cases, holding and speciality cabinets, dairy cases, freezers, floral displays and much more.

- Nickel / Tin plated bulb and capillary
- Polycarbonate lens / bezel
- Stainless steel cases

MODEL 6142-20



	6142-06	6142-13	6142-20	6142-58
Temperature Range	40° to 240°F 10° to 115°C	-40 to 120°F -40 to 50°C	-40° to 60°F -40° to 15°C	-40° to 60°F -40° to 15°C
Accuracy	±5°F @ 110°F ±3°F @ 200°F	±2°F @ 40°F ±4°F @ 10°F ±5°F @ 110°F	±2°F from 10° to 40°F ±3°F below 10°F and above 40°F	±2°F from 10° to 40°F ±3°F below 10° and above 40°
Dial Dia.	2" / 5.08 cm	2" / 5.08 cm	2" / 5.08 cm	2" / 5.08 cm
Capillary Length	48" / 121.9 cm	48" / 121.9 cm	48" / 121.9 cm	240" 609.6 cm
Flange	Front	Front	Front	Front
Connection	Back	Back	Back	Back
Mounting	Flush	Flush	Flush	Flush
Weight	5.2 oz / 147.4 g	5.2 oz / 147.4 g	4.7 oz / 133.2 g	6.8 oz / 192.8 g
Regulatory Listings	NSF	NSF	NSF	-
LIST	$157.80	$155.10	$114.30	$154.40

MODEL 6642-06



MODEL 6812-02



	6642-06	6812-01	6812-02
Temperature Range	-40° to 60°F -40° to 15°C	-40° to 60°F -40° to 15°C	-40° to 120°F -40° to 50°C
Accuracy	±2°F from 10° to 40°F ±3°F below 10°F and above 40°F	±2°F from 10° to 40°F ±3°F below 10°F and above 40°F	±2°F @ 40°F ±4°F @10°F ±5°F @ 110°F
Dial Dia.	2" / 5.08 cm	2" / 5.08 cm	2" / 5.08 cm
Capillary Length	48" / 121.9 cm	48" / 121.9 cm	48" / 121.9 cm
Flange	Strap hanger no flange	Back	Back
Connection	Bottom	Back	Back
Mounting	-	Surface	Surface
Weight	4.6 oz / 130.4 g	5.7 oz / 161.6 g	6.2 oz / 175.8 g
Regulatory Listings	-	NSF	-
LIST		$162.80	

MODEL 7112-01



	7112-01	7112-02	7112-05	7612-06
Temperature Range	-40° to 60°F -40° to 15°C	-40° to 120°F -40° to 50°C	40° to 240°F 10° to 115°C	-40° to 60°F -40° to 15°C
Accuracy	±2°F from 10° to 40°F ±3°F below 10°F and above 40°F	±2°F @ 40°F ±4°F @10°F ±5°F @ 110°F	±5°F @ 110°F ±3°F @200°F	±2°F from 10° to 40°F ±3°F below 10°F and above 40°F
Dial Dia.	2.5" / 6.35 cm	2.5" / 6.35 cm	2.5" / 6.35 cm	2.5" / 6.35 cm
Capillary Length	48" / 121.9 cm	48" / 121.9 cm	48" / 121.9 cm	48" / 121.9 cm
Flange	Front	Front	Front	Strap Hanger
Connection	Back	Back	Back	Bottom
Mounting	Flush	Flush	Flush	N/A
Weight	5.3 oz / 150.3 g	5.8 oz / 164.4 g	5.8 oz / 164.4 g	5.6 oz / 158.8 g
Regulatory Listings	NSF	-	-	-
LIST	$152.00			

DIGITAL REMOTE THERMOMETERS

Electronic Panel Mount Thermometers

Part #	Description	LIST
DM-450	Front flange mounting remote sensor digital thermometer. Sensor cord is 1 meter (39") long. 1.5 volt battery #393. Temperature range -40° to 232°C. NSF listed.	$291.70
DM-120S	Temperature range -40° to 50°C. Back Flange.	$217.60
SP160-WHITE-CPD SP160-BLACK-CPD	Solar powered. "Self powered" thermometers operate without any batteries.Horizontal wall mount -58°F to 158°F / -50°C to 70°C	$128.30
PM-120	Rectangular remote, use where mounting space is limited or where a plastic housing is preferred. 2.625" x 1.375" x 1" deep white polystyrene. 39" remote sensor length and 0.5" high LCD display. Mounting dimensions 2.375" x .781" cut-out. Mounting flange #9302 is available. AA battery included. Temperature range -40° to 120°F / -40° to 50°C	$112.50
PMRH-120	Digital Remot Temperature/Humidity Panel Meter. Max/Min button. Dry/Comfort/Wet icon shows on the LCD display. Temperature range -12° to 140°F / -40° to 50°C	$153.70
SP-120	Solar powered panel meter with battery back-up. Unit operates using ambient light sources, and comes with a 1.5 volt battery that automatically turns on when ambient light is not strong enough to power the meter. Switchable temperature range -50 to 150°F (-50 to 70°C).	$170.40











THERMOMETERS

Cooper Mechanical Stem Thermometers

2.5" diameter reverse flange bezel, stainless steel with .25" diameter stem.

Part #	Description	LIST
2225-02	0 to 220°F 4" stem	
2245-03	-40 to 160°F 6" stem	$81.30
2255-02	0 to 220°F 9" stem	
2255-03	-40 to 160°F 9" stem	



Winters Tridicators

Part #	Dial Size	Connection	Range	LIST
TTD402-WIN	3” (80mm)	1/2” NPT, Back	0-75 psi/kPa, 30-240°F&C	$147.20



Winters Digital Vari-Angle, Solar Powered Thermometer

Range: -40/300°F -40/150°C

Part #	Description	LIST
TSD9ITSD-WIN	3-1/2" ind. stem (includes well)	$444.00



Winters Vari-Angle Thermometers

Part #	Description	Range	LIST
TIM102A		0 / 120° F & -15/50°C	$286.90
TIM103A		0 / 160° F & -15/70°C	$286.90
TIM100A		30 / 240° F & 0/115°C	$286.90



Winters TAS Series Thermometers

An all-purpose, economical thermometer with a vertical sensing tube and case.

Part # (Straight)	Part # (Angle)	Range	LIST	LIST
TAS130	TAS140	-40°F to110°F & -40°C to 40°C	$120.40	$142.60
TAS131	TAS141	20°F to 180°F & -5°C to 80°C	$120.40	$142.60
TAS132	TAS142	30°F to 240°F & 0°C to 115°C	$120.40	$142.60
	TAS143			



HUMIDITY METERS

Humidity Instruments



0012-7012

Pocket Sling Psychrometer

Part #	Description	LIST
0012-7012	New design protects replaceable 5" tubes. 20° - 120°F in 1° divisions. Leather case with water vial, humidity chart and spare wicks	



Fieldpiece Pocket Sized Digital Psychrometer

Part #	Description	LIST
PRH2-FLP	Pocket Sized Digital Psychrometer, Measures RH, Dew Point, Wet Bulb and Dry Bulb Temperatures, Hold/Max/Min Modes, -40 to 257 F (-40 to 125 C), 0 to 100% RH, 10 Minute Auto Off Feature	$286.20



Thermor Humidiguide

Part #	Description	LIST
TRH158	Measure both temperature and humidity	
TRH122M	-40 to 160°F 9" stem	$259.10



Thermo-Hygrometer Pen

Part #	Description	LIST
THP2	Pen size thermo-hygrometer measures and displays an environment temperature and humidity reading. Temperature range: 14 to 122°F and -10 to 50°C Humidity range: 20 to 90% R.H. °F/°C selectable with the touch of a button. Min/Max readings recall.	$85.90



THERMOMETERS
COOPER-ATKINS



TR610



TR614



268


212-150

Wall Thermometers

Part #	Description	LIST
TR610	**Utility Thermometer** White aluminum back with rugged caps for wall mounting. 9-1/8" length. For indoor or outdoor.	$8.40
TR614	**Handy-Temp Thermometer** Ideal for indoor or outdoor use. Convenient ring top for mobile use or screw holes for permanent fastening. All aluminum, can't rust. White with red and black scale. 8-1/8" length.	$13.10
268	**Wall Thermometer** 7-3/4" x 2".	$25.20
212-150	**Cooper 14" Diameter Wall Thermometer** -40°F to 120°F / -40°C to 50°C	$155.50

POCKET THERMOMETERS

Pocket Test Thermometers

- 1" dial. Red protective sheath. 5" stainless steel stem.

Part #	Description	LIST
1246-01	-40° to 180°F	$30.90
1246-02	0° to 220°F	$30.60
2238-06	2" Dial - 0° to 220°F	$67.80

2238



1246-02



Pocket Test Thermometers (Digital)

- Easy to read LCD
- Red protective sheath with clip
- 5" stainless steel stem

Part #	Description	Range	LIST
DPP400W	Auto shut-off	-40° to 392°F/ -4° to 200°C	$100.30
DPS300	1" swivel head, turns 30°, 60° or 90°, auto shut-off, 3 sec. update	-58° to 302°F	$66.40
DT300	on/off switch, 1" dial	-40° to 302°C/ -40° to 150°C	$69.70
DFP-450W	flat head, instant update button, auto shut-off	-40° to 450°F/ -40° to 232°C	$131.40



DT300



DPS300

DFP-450W



DPP400W



TEMPERATURE AND HUMIDITY TESTERS

Cooper SRH77A Temperature & Humidity Tester



- Three zone temperature monitor with %RH measurement
- Calculates wet bulb temperature
- Calculates temperature difference between probes one and two

Part #	LIST
SRH-77A	$1,650.00

Amprobe THWD-3 Relative Humidity & Temperature Meter



- Dual display
- Extended probe stem to easily access air ducts
- Capacitive sensor with protective cover
- Min/Max readings
- Wet bulb and Dew point
- Data Hold
- Auto Power off
- Soft Carrying Case

Part #	LIST
THWD-3-FLU	$751.00

Fluke 971 Temperature Humidity Meter

- Backlit dual display of humidity and temperature
- Measures dew point and wet bulb temperatures
- 99 record storage capacity
- Ergonomic design with belt clip and protective holster
- Quick-response capacitance sensor
- Compact and lightweight (188 g/6.6 oz)
- Temperature range from -20 °C to 60 °C (-4°F to 140 °F)
- Relative humidity from 5 % to 95 %
- Min/Max/Avg Data hold
- Low battery indicator



Part #	LIST
971-FLU	$1,754.00

Cooper Temperature / Relative Humidity

Part #	Description	LIST
TRH122M	Compact size mini thermo-hygrometer monitors temperature and relative humidity in the palm of your hand, from a table top or wall location. Min/max memory records highest & lowest temperatures.	$259.10



HAND-HELD INFRARED THERMOMETERS

Fieldpiece Pocket Thermometers



The SPK1 Pocket Knife Style Thermometer features a sharp tip for punching through flex duct and hangs easily from a vent or thermostat.

- Temperature probe folds away like a pocketknife
- Select °F or °C
- MAX/MIN and HOLD functions
- Sharp enough to puncture fiberboard and flexduct
- Easily hangs from register
- Temperature range: -58°F to +392°F

Part #	LIST
SPK1	$110.50



The SPK2 Folding Pocket Thermometer fits directly in your pocket. The folding rod has a hanging hook so you can easily hang it in a duct or on a grille.

- Hangs on air registers or duct walls
- Large Display
- Rod Folds into body
- T1 and T2 temperature class measurements
- Max/Min/Hold
- Fahrenheit and Celsius
- Low Battery Indicator

Part #	LIST
SPK2	$121.90

HAND-HELD INFRARED THERMOMETERS

FLUKE

59 MAX+ Infrared

- Precise laser technology for more accurate and repeatable measurements
- Large, easy-to-read backlit LCD display for easy viewing
- Small and lightweight design fits easily fits into your tool box
- 10:1 distance to spot ratio
- Displays the minimum, maximum or average temperature, or the difference between two measurements
- Hi and Lo alarms for rapid display of measurements outside the limits



Model	LIST
59MAX-PLUS	$434.00

---

62 MAX+ 12:1 Infrared

- Dual lasers: The 62 MAX+ has dual rotating lasers to help you identify area to be measured. The measurement area is the spot between the dots.
- Large, backlit display: Large screen makes data easier to read, even in dark areas.
- Min/Max/Avg/Dif: Displays the minimum, maximum or average temperature, or the difference between two measurements.
- Alarm: Hi and Lo alarms for rapid display of measurements outside the limits.



Model	LIST
62MAX-PLUS	$715.00

561 Pro 12:1 IR Contact

- IR thermometer for quick measurements up close, or at a distance
- Contact thermometry capability, compatible with all standard mini-connector type K thermocouples
- Velcro® pipe probe
- Single-point laser sighting
- Temperature range of -40 °C to 535 ° C (-40 °F to 1022 °F)
- 12:1 distance to spot ratio
- Easy emissivity adjustment
- MIN, MAX, and DIF functions
- 2 year warranty



Model	LIST
561-FLU	$1,019.00

THERMAL IMAGING CAMERA

Klein Tools Rechargeable Thermal Imager

Features

- Thermal Imager has over 10,000 pixels to troubleshoot hot and cold spots
- Adjustable emissivity from 0.10 to 0.99
- Store and share images with optional microSD® Card
- User selectable high and low temperature alarms from -4 to 752-Degree Fahrenheit (-20 to 400-Degree Celsius)
- Select color palettes to best capture the event
- Rechargeable lithium-ion battery
- Includes thermal imager, micro-USB charging cable, carrying case, and instructions



Model	Description	LIST
TI250	Klein Rechargeable Thermal Imager	$965.00

Fluke Compact PTi120 Pocket Thermal Camera

Features

- Automatically organize and file thermal images with Fluke Connect Asset Tagging
- Fully radiometric thermal imager gives you measurement data to the pixel with 120 x 90 infrared resolution (10,800 pixels)
- 3.5” LCD touchscreen display for easy troubleshooting
- -20 °C to +150 °C temperature measurement range
- Six color palettes
- Can withstand drop up to 1 meter
- IP 54 enclosure rating
- Subject to Export Control



Model	Description	LIST
PTI120	Fluke Pocket Thermal Imager	$5,126.00

50 SERIES DIGITAL THERMOMETERS

FLUKE



Features:

- Large backlit dual display shows any combination of T1, T2 (52 and 54 only), T1-T2 (52 and 54 only), plus MIN, MAX or AVG. Relative time clock on MIN, MAX and AVG provides a time reference for major events.
- Readout in °C or °F
- Splash and dust resistant case protected by impact absorbing holster
- User friendly front panel is easy to set up and operate
- Sleep mode increases battery life
- Optional ToolPak accessory allows the thermometer to hang from any metal object (with the rare earth magnet) or secure around a pipe (with hook-and-loop straps) for hands-free operation



The Fluke 54 Series II B include all the features listed above plus:

- Data logging up to 500 points of data with user adjustable recording interval
- Real time clock captures the exact time of day when events occur
- Recall function allows logged data to be easily reviewed on the meter display
- IR communication port allows data to be exported to optional FlukeView Temperature PC software for further analysis and graphing

Features	54-2-B	52-2-FLU
Thermocouple Types	K, J, T, E, N, R, S	K, J, T, E
Number of Inputs	Dual	Dual
Time Stamp	Time of Day	Relative Time
Rugged Design with Holster	•	•
Splash / Dust Resistant	•	•
Dual Display with Backlight	•	•
MIN / MAX / AVG Recording with Time Stamp	•	•
Compatible with Optional ToolPak	•	•
Differential (T1-T2) Readout	•	•
Data Logging up to 500 Points	•	
IR Data Port for Interface to PC	•	
LIST	$2,339.00	$1,861.00

TEMPERATURE TESTERS

Cooper TM99A-UL Digital Temperature Tester



- Temperature range of -40 to +300°F (-40 to +150°C)
- A detachable, fast acting #1075 probe supplied, stored when not in use in shock resistant case
- Ideal for HVAC: ambient air & duct temperatures, thermostat calibration
- For liquid, air and semi-solid temperatures

Model	LIST
TM99A-NIST	$919.00

Cooper SH66A 3 Probe Temperature Tester



- Ideal for measuring superheat
- Temperature differential function displays updated differential between probes 1 & 2
- All functions require a single key stroke
- 3 detachable, interchangeable 10K thermistor probes provided

Model	LIST
SH-66A	-

TEMPERATURE ACCESSORIES

FLUKE

80PK-1 Bead Probes

This basic, inexpensive thermocouple offers good accuracy and fast response. (not suitable for liquid immersion). 80PK-1 is compatible with K-type thermometers. Measurement range: -40 to 260°C (-40 to 500°F)



Part #	LIST
80PK-1-FLU	$205.90

80PK-22 Immersion Probe

K thermocouple for use in liquids and gels. Soft rubber handle provides a secure grip. Measurement range: -40°C to 1090°C (-40°F to 1994°F).



Part #	LIST
80PK-22-FLU	$464.00

80PK-3A Surface Probe

Designed for measuring the temperature of flat or slightly convex surfaces, this K type probe is ideal for hot rollers and plates. Exposed junction allows direct contact with the surface being measured. Measurement range: 0°C to 260°C (32°F to 500°F).



Part #	LIST
80PK-3A-FLU	$719.00

80PK-24 Air Probe

K thermocouple for air and non-caustic gas measurements. Perforated baffle around the measurement bead. Measurement range: -40°C to 816°C (-40°F to 1500°F).



Part #	LIST
80PK-24-FLU	$549.00

80PK-25 Piercing Probe

4" probe made from 316 stainless steel. Ideal for food service applications. Measurement range: -40 to 350°C (-40°F to 500°F)



Part #	LIST
80PK-25-FLU	$549.00

80PK-26 Tapered Probe

8" probe made from Inconel for general purpose surface and air measurements. Compatible with K-Type measurement instruments. Measurement range: -40°C to 816°C (-40°F to 1500°F).



Part #	LIST
80PK-26-FLU	$549.00

TEMPERATURE ACCESSORIES

FLUKE

80PK-8 Pipe Clamp Temperature Probe

Designed for pipe surfaces from 6.4 mm (1/4") diameter to 34.9 mm (1-3/8") diameter. Spring-action jaw will not loosen over time, ensuring repeatable measurements. Robust design for extended service life. Measurement range: -29°C to 149°C (-20°F to 300°F). Repeatability: 0.56°C (1°F)



Part #	LIST
80PK-8-FLU	$785.00

80PK-9 General Purpose Probes

Use as surface probe and for insertion into air and non-caustic gases. Probe constructed of 304 stainless steel. Compatible with K-type thermometers. Measurement range: -40°C to 260°C (-40°F to 500°F)



Part #	LIST
80PK-9-FLU	$343.00

80BK-A Integrated DMM Temperature Probe

Compatible with the Fluke 16 and Fluke 89 Series IV and other DMMs with temperature measurement functions. K-type thermocouple with standard banana jack. Convenient one piece construction. Measurement range: -40 to 260°C (-40 to 500°F)



Part #	LIST
80BK-A-FLU	$219.00

80CK-M Type-K Male Mini-Connector

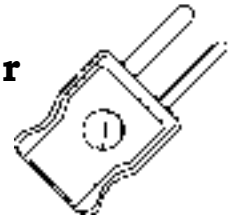

Isothermal screw terminal for K. Suitable for up to 20 gauge thermocouple wire. Two per package.

Part #	LIST
80CK-M-FLU	$143.80

80AK-A



Adapts Type-K thermocouple mini-connector to dual banana plug inputs. Allows the Fluke 89 IV or Fluke 16 multimeters to be used with any K-type thermocouple accessory. Measurement range and accuracy is not affected by the 80AK adapter.

Part #	LIST
80AK-A-FLU	$160.20

TYPE K THERMOCOUPLE PROBES

COOPER / ATKINS





	4005MK Pipe Clamp Probe	50014-K Weighted Surface Probe
Temperature Range	-20° to 300°F -29° to 149°C	500°F/260°C
Max Tip Temp	NA	500°F/260°C
Max Cord Temp	200°F/93°C	400°F/205°C
Response Time	2 Seconds	2 Seconds Oiled Surface
Shaft Length	-	-
Cord Length	120” TEP straight cord	30” Flexible Armored Cable
LIST	**$514.00**	**$812.00**





	50306-K Air Probe For Freezer W Clip	50318-K Ceramic Tip Surface Probe
Temperature Range	600°F/315°C	1202°F/650°C
Max Tip Temp	600°F/315°C	1202°F/650°C
Max Cord Temp	NA	176°F/80°C
Response Time	1 Second Liquids 10 Seconds Air	1 Second Oiled Surface
Shaft Length	2.125”/54 mm w/ Clip	4”/102 mm
Cord Length	43” Flexible SS Braid Cable	48” PVC Extended 12” PVC Retracted
LIST	**$348.00**	**$450.00**

INSTRUMENTS

Amprobe TMA-10A Anemometer with Flexible Precision Vane

Part #	LIST
TMA10A-FLU	$1,279.00



- Measure air velocity FPM or air volume CFM
- Input surface area for air flow measurements
- Accurate Thermistor for temperature measurements
- Continuous moving average results for up to 2 hours
- MIN/MAX/AVG readings
- Air velocity average for multiple point
- Temperature in °C or °F, switchable
- Data hold to freeze measurement display of both readings
- Auto power off function
- RS232 interface output with optional software and cable,Model TM-SW
- Deluxe hard carrying case

Fluke 9040 Phase Rotation Indicator



Phase Rotation Indicator for Industrial Applications

A portable handheld instrument designed to detect the rotary field of three-phase systems. With three test leads, this rugged tester easily determines a clockwise or counterclockwise direction.

Features

- Large display to easily determine field rotation
- Indication for all three phases
- CAT III 600 V
- Included accessories: test leads and probes, alligator clips
- 2-Year Warranty

Part #	LIST
9040-FLU	$1,437.00

Amprobe TACH20 Combo Tachometer



- Measures rotational and surface speed
- Built-in memory
- Digital display
- Auto power off function
- Easy to select units and mode functions
- Contact and non-contact measurement
- Select rpm using infrared beam or adapter: m/min, m/sec, ft/min, ft/sec, in/min, m, ft, and in.
- Includes 6 adapters, carrying case, reflective tapes batteries and users manual

Part #	Description	LIST
TACH20-FLU	Includes 6 Adapters	$2,118.00

MANOMETERS

Fieldpiece Dual Port Manometer and Pressure Switch Tester

The SDMN6 dual-port manometer measures gas and static pressure and also accurately tests pressure switches by simulating a draft with an internal pump.



- Gas, static, and differential pressure
- Test pressure switches
- Easily calibrate any adjustable pressure switch
- measures ±60 inches of water column, high enough for gas manifold pressures.
- Great for diagnosing furnace performance

Part #	LIST
SDMN6	$1,066.00

Fieldpiece Dual Port Manometer

The SDMN5 measures gas pressure, static pressure and pressure differential. It includes a zero adjust button of the face of the meter, a rugged rubber boot, a magnet on the back for hanging the meter during service, and the Auto Power-Off (APO) function conserves battery life.



- Measures inches WC, mmWC, mBar, and PSI
- Measures Gas Pressure & Static Pressure
- Measures Differential Pressure P1-P2
- Min/Max and Hold
- Range: -60.0 to + 60.0 inch WC

Part #	Description	LIST
SDMN5	Dual Port Manometer	$561.00
SDMN5K1	Dual Port Manometer w/case	

Testo 510 - Digital manometer



- Temperature and air density compensation for accurate airflow measurements
- Measures differential pressure to 40 in. H2O
- Backlit display ensures easy readability in low light situations
- Temperature compensated pressure sensor

Part #	LIST
0563-0510	$727.00

Dwyer Duel Range Flex-Tube® U-Inclined Manometers

Most versatile and useful low cost manometer we know of. Designed for installation and servicemen. A sturdy, clear plastic manometer, it offers single, direct readings in two ranges: As a U-tube, it reads from 0 to 16" of water; as an inclined gage, it reads from -.20 to 0 to 2.6" of water. Model 1227M (Metric) is 0 to 400 mm water column as a U-tube and -5 to 0 to 70 mm water column as an inclined gage. "How-to-use" instructions are printed directly on the scale.



Part #	LIST
1227	$831.00

Gas Pressure Test Kit

This compact kit helps you accurately set manifold pressure for natural or L.P. gas.

Part #	Description	Gauge Range	LIST
29436-JBI	Gas Test Kit 0-10 In.	.0 - 10" W.C.	$202.30
29435-JBI	Gas Test Kit 0-35 In.	0 - 35" W.C.	$202.30



INSULATION TESTERS

Fluke 1507 Insulation Tester



The Fluke 1507 Insulation Testers are compact, rugged, reliable, and easy to use. With their multiple test voltages, they are ideal for many troubleshooting, commissioning, and preventative maintenance applications.

Additional features, like the remote probe on these tools save both time and money when performing tests.

- Insulation test range:
  0.01 MΩ to 10 GΩ
- Insulation test voltages:
  50 V, 100 V, 250 V, 500 V, 1000 V

Part #	LIST
1507	$2,864.00

Fluke 1587FC Insulation Multimeters

- Insulation test: 0.01 MΩ to 2 GΩ
- Insulation test voltages:
- 50 V, 100 V, 250 V, 500 V, 1000V
- Auto-discharge of capacitive voltage
- Measure AC/DC voltage, DC millivolts, AC/DC milliamps, resistance, and continuity
- Fluke 1587 includes capacitance, diode test, temperature, min/max, and frequency
- Low-pass filter for variable-speed motor drive measurements
- Three year warranty

Part #	LIST
1587FC	$3,497.00



INSULATION TESTERS

M501 Insulation Tester / Electronic Megohmmeter

- Display: llight emitting diodes
- Indicator Range: 5 to 1000 Megohms
- Case: Hi-impact thermoplastic
- Carrying Case: built-in, rugged, 9.5" x 6.5" x 3"
- Batteries: (2) "C" size 1.5 volt (not included)



Part #	LIST
M-501	$671.00

Fieldpiece SMG5 Digital Insulation Meter

SMG-5 provides a 1000V voltage source, monitors current, and displays the resistance between the test points. Maximum current output is >1mA. It can be used to determine the condition of insulation from winding to ground in a motor, compressor, or transformer. Includes a case, alligator clip lead tip and leads with removable tips

- 1000VDC Voltage Source
- Measure up to 2000 megohm
- Backlit LCD



Part #	LIST
SMG5	$479.00

CARBON MONOXIDE METERS

Klein ET110 Carbon Monoxide Meter



- Easy-to-use meter detects and measures concentration levels of carbon monoxide gas
- User protection with short-term exposure limit (STEL) alarm
- Low level alarm (35 ppm) and high level alarm (200 ppm)
- Audible and visual alarms
- Backlit display with CO measurements (0 to 1000 ppm) and temperature (°F/°C)
- Auto-power off after 20 minutes of no usage helps conserve battery life
- Includes carrying pouch and 4xAAA batteries
- Meter is NOT intended for use as personal protection equipment

Part #	LIST
ET110	$339.00

Fluke CO-220 Carbon Monoxide Meter



The Fluke CO-210 Cabon Monoxide Meter is the same as the CO-210 except it's a stand alone unit with digital display

Part #	LIST
CO-220	$2,182.00



Fluke CO-205 Aspirator Kit

Sample flue gas with your Fluke CO-210 or CO-220 using the CO-205 Aspirator Kit.

Part #	LIST
CO-205	$865.00



Inficon CO Check™ Carbon Monoxide Meter

- Best-in-class accuracy for peace of mind
- Easy-to-use pushbuttons let you perform all functions with one hand
- Highly visible, intuitive “stoplight” LEDs give quick indication of CO hazard
- Large, easy-to-read LCD display for precise measurements
- Audible alarm
- Competitively priced
- Protective case with belt clip included
- Runs for 200 hours on 9V alkaline battery
- 2-year replacement warranty

Part #	LIST
715-202-G1-INF	$926.00

CLAMP METERS

FLUKE

Fluke 320 and 370 Series Clamp Meters offer an impressive array of innovative features with current ranges up to 1000 A. Choose the model that matches the jobs you do.

- Small body and jaws fit perfectly in your hand and into tight places
- Backlight available on most models
- Controls positioned for one hand operation
- New Inrush current feature measures motor-starting current the way a circuit breaker or overload unit sees it (selected models)
- Accurate low current measurements
- Auto shut-off
- Display hold
- Includes batteries, test leads, instruction card, safety sheet and carrying case.
- Safety rating: IEC 1010-2-031, 600 V Cat III

H3 Holster



Rugged holster with built-in pocket and velcro flap for test lead storage. Convenient belt loop with snap. Recommended for the 330 Series Clamp Meters.

	325	374FC	375FC	376FC
				
Measure ac current	40.00 A 400.0 A	1000.0 A	1000.0A	1000.0 A
Measure ac voltage	600 V	600.0 V	600.0 V	1000.0 V
Measure continuity	≤ 30 Ω	≤ 30 Ω	≤ 30 Ω	≤ 30 Ω
Measure dc voltage	600V	1000.0V	1000.0V	1000.0V
Higher resolution for loads below 40 amperes	0-40.00A 40.0 - 400.0 A			
Measure resistance	400.0Ω	6000Ω	60kΩ	60kΩ
Measure inrush		100 mS	100 mS	100 mS
Work in poorly lit areas		Backlight	Backlight	Backlight
Measure non-linear loads		True-rms	True-rms	True-rms
Measure dc current		600.0 A	600.0 A	999.9 A
LIST	**$1,403.00**	**$1,771.00**	**$1,938.00**	**$2,205.00**

CLAMP METERS

Amprobe AMP-310 Clamp Meter

- Measures AC Current to 600 A and AC/DC Voltage to 600 V
- Measures temperature from -40° to 752°F, (-40° to 400°C)
- Measures DC Microamps output to test proper operation of the flame sensor on gas appliances
- Measures capacitance, test diodes, and features a continuity beeper
- Tests 3-phase sequence and motor rotation to ensure proper connection of a motor to a 3-phase system

Part #	LIST
AMP310	$805.00



VOLTAGE, CONTINUITY AND CURRENT TESTERS

Fluke Volt Alert Voltage Detector

The next generation VoltAlert™ AC voltage testers from Fluke are easy to use - just touch the tip to a terminal strip, outlet, or cord. When the tip glows red and the unit beeps, you know there's voltage in the line.

Model #	Description	LIST
1AC-A1-II-FLU	AC V Detector 90-1000 V	$140.60
1LAC-A-II-FLU	Low Voltage Detector 20-90 V AC	$140.60
2AC/90-1000VC	AC V Detector 90-1000 V	$140.60
LVD2	Non-contact AC voltage detector	$189.80



Milwaukee Volt Alert Voltage Detector

Model #	Description	LIST
2200-20	Voltage Detector	$40.00
2202-20	Voltage Detector with LED	$56.60
2203-20	10-1000V Dual Range Voltage Detector	$66.80



Klein Non-Contact Voltage Tester

NCVT-6 is a non-contact voltage tester (NCVT) with an integrated laser distance meter. It can detect voltage over the full-range from 12 to 1000 VAC and can measure distances from 2-Inch (51 mm) up to 66-Feet (20 m).

Model #	Description	LIST
NCVT-6	Non-Contact Voltage Tester	$151.10



CURRENT TESTERS & CLAMPS

Fluke T5 and T6 Electrical Testers

- T5 Electrical tester for continuity/ohms, ac amps and 600 (model T5-600) or 1000 (model T5-1000) volts ac/dc. New openjaw technology for up to 100 amps ac, with 0.1 amp resolution.
- T6 Electrical tester measures voltage up to 1000 V ac through the open fork, without test lead contact to live voltage. Without opening covers or removing wire nuts. On wires up to AWG 4/0 (120 mm2), carrying as much as 200 A.

Part #	LIST
T5-600	$539.00
T5-1000	$673.00
T6-600	$841.00
T6-1000	$1,236.00



DIGITAL MULTIMETERS
FLUKE



116



117



179/EDA2-FLU

(Includes TPAK Mag. Hanger)



87/5E2-FLU

(Combo Kit)



289/FVF-FLU

(Wireless Remote Display)



289/FVF-FLU

(Includes Software)



1587FC-FLU

Model	116	117	179/EDA2	87/5E2	233	289/FVF	1587FC
Counts	6000	6000	6000	20000	6000	50000	
True RMS readings	AC	AC	AC	AC+DC	AC	AC+DC	AC+DC
Basic DC accuracy	0.5%	0.5%	0.09%	0.05%	0.25%	0.025%	0.09%
Wide bandwidth				20 kHz		100 kHz	
Auto/manual ranging	•	•	•	•	•	•	•
Measurements							
Voltage AC/DC	600V	600V	600V	1000V	1000V	1000V	1000V
Current AC/DC	200µA	10 A	10 A	10 A	10 A	10 A	400mA
Resistance	40MΩ	40MΩ	50MΩ	50MΩ	40MΩ	500MΩ	50MΩ
Frequency	50 kHz	50 kHz	100 kHz	200 kHz	50 kHz	1 MHz	100 kHz
Capacitance	10 mF	10 mF	10 mF	10 mF	9999 µF	100 mF	9999 µF
Temperature	+400°C		+400°C	+1090°C	+400°C	+1350°C	+537°C
dB						60 dB	
Conductance				60 nS		50 nS	
Duty cycle/pulse width				•/-		•	
Continuity with beeper	•	•	•	•		•	•
Diode test	•	•	•	•		•	•
Insulation Test							•
Dual Display						•	•
Analog bargraph	•	•	•	•		•	
Backlight	•	•	•	•	•	•	•
LIST	**$919.00**	**$969.00**	**$1,671.00**	**$2,506.00**	**$3,626.00**	**$3,497.00**	**$1,754.00**

DIGITAL MULTIMETERS

FLUKE

116/62 MAX+ Technician's Combo Kit



Model #	LIST
116/62-MAX-PLUS-KIT	$1,203.00

116/323 HVAC Combo Kit - Includes Multimeter and Clamp Meter



Model #	LIST
116/323-KIT	$1,437.00

AMPROBE

PM55A Compact Precision DMM with AutoTect™ and VolTect™

It is the most full featured multimeter in this minute size. Includes VolTect and AutoTect. It measures AC and DC voltage to 600 V, AC and DC current to 2000 µA, resistance to 6 MΩ, capacitance to 2000 µF, and frequency to 30 kHz. It includes a silicone protective holster, deluxe carrying case, attached test leads, battery and manual. Safety rated to CAT III 300V, CAT II 600V, cULus listed.



Model #	LIST
PM55A-FLU	$350.00

AM-520 HVAC Multimeter

It offers all the most commonly used HVAC digital multimeter features such as temperature, micro amps to troubleshoot flame sensors, and capacitance to check motor startup capacitors. With its CAT III safety rating, this high voltage multimeter measures a broad range of electrical parameters. The backlit LCD display makes it easy to read, and it's easy to use with non-contact voltage detection, the "third hand probe holder, and the built-in flashlight.



Model #	LIST
AM520	$295.60

AM-560 Advanced HVAC Multimeter

It is specifically designed for advanced HVAC applications. This HVAC multimeter offers a full set of professional digital multimeter features to measure a complete range of electrical parameters and key functions for HVAC applications. Dual thermocouples take differential temperature measurements; a low pass filter enhances accuracy on variable frequency drive measurements; and capacitance can be used to check motor startup capacitors. The AM-560 also features micro amps for flame sensor troubleshooting, non-contact voltage detection, and a CAT IV safety rating.



Model #	LIST
AM560	$640.00

AM-570 Industrial Multimeter

One of the best digital multimeters in its class. Designed for professional electricians who need to maintain service or troubleshoot advanced electrical systems in the most demanding environments, the high voltage multimeter is packed full of professional digital multimeter features. With True-rms accuracy for measuring voltage in noisy environments, dual thermocouples for differential temperature measurements, low impedance mode to detect stray voltage, and a low pass filter to accurately measure the voltage on variable frequency drives, it takes care of quick go/no-go checks with a single tool.



Model #	LIST
AM570	$869.00

SOFT / HARD METER CASES

FLUKE

C50 Meter Case

Zippered carrying case with inside pocket, belt loop and inside meter strap



Part #	LIST
C50	$192.90

C25 Meter Case

Zippered carrying case with padding and inside pocket



Part #	LIST
C25	$179.80

FLUKE

C550 Tool Bag

- Steel reinforced frame
- Rugged ballistic cloth with heavy duty hardware
- Large zippered storage compartment with 25 pockets
- Weather resistant
- Carry all your tools to the job

Part #	LIST
C550	$441.00



HANGING AND LOCKING KITS

ToolPak

The meter hanging solution

- Kit includes universal hanger clips (2), hook & loop straps (2 lengths), adapter and strong magnet
- Combine components to meet most hanging needs
- Attaches to back of many Fluke meters,including 110, 170, 180 Series, 80 Series IV DMMs, 725 Process Calibrator, 70 Series III DMMs and 50 Series II Digital Thermometers.

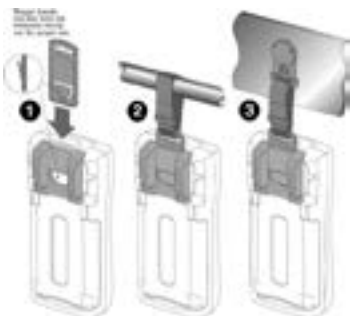

Part #	LIST
TPAK	$179.80

TEST LEADS, PROBES & CLIPS

FLUKE

Modular Test Leads & Probes

TL175 TwistGuard™ Test Leads

- TwistGuard™ adjustable tips enhance safety and versatility length
- WearGuard™ indicator shows damage to leads
- Heavy duty strain relief withstands over 30,000 bends



Part #	LIST
TL175	$150.40

TP175 TwistGuard™ Test Probes

- Adjustable tip length, allowing increased safety and precision
- Compatible with the TL22x series, TL238 and TL27 test leads
- Conforms to EN61010-031
- CAT II 1000 V, CAT III 1000 V, CAT IV 600, 10 A rating, UL Listing



Part #	LIST
TP175	$150.40

TL221 SureGrip™ Silicone Test Lead Extension Kit

- Superior strain relief
- Includes 2 adapters to extend lead reach another 1.5M



Part #	LIST
TL221	$143.80

TL222 SureGrip™ Silicone Insulated Test Leads

- Recommended for use with AC220,AC280,AC283 test clips
- Superior strain relief



Part #	LIST
TL222	$143.80

TL224 SureGrip™Silicone Test Leads

- 1.5 meter silicone-insulated wire resists heat and cold
- Superior strain relief



Part #	LIST
TL224	$143.80

TP220 SureGrip™ Industrial Test Probes

- Sharp 1/2" stainless steel tip provides reliable contact
- Flexible finger barrier improves grip



Part #	LIST
TP220	$104.60

TP1, TP2 and TP4 Slim Reach Test Probes

- Slender probe bodies for porbing closely spaces or recessed points
- TP1 has a flat blade ideal for electrical wall sockets
- TP2 has 2 mm diameter tip for precise electronic probing
- TP4 has 4 mm diameter tip ideal for European electrical wall sockets



Part #	LIST
TP1	$98.10

TP80 Electronic Test Probes

- Tapered tip ideal for probing high-density electronic components or boards
- Removable guard for IC probing



Part #	LIST
TP80	$173.20

TEST LEADS, PROBES & CLIPS

FLUKE

Modular Clips / Push-On Clips

AC220 SureGrip™ Alligator Clips



- Insulated, nickel plated jaws grip objects up to 3/8"
- Blunt tip grabs round screw heads

Part #	LIST
AC220	$212.50

AC280 SureGrip™ Hook Clips



- Profile narrows to .22 inches at tip
- Hook opening .20 inch at front, .08 inch at base

Part #	LIST
AC280	$176.50

AC89 Heavy Duty Insulation Piercing Clip

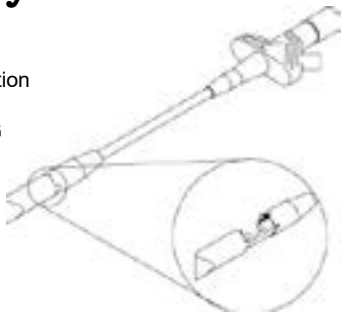

- Plunger style, safety grip operation with insulated jaws
- Small pin pierces 30 to 14 AWG insulated wire

Part #	LIST
AC89	$202.70

AC285 SureGrip™ Alligator Clips



- Multi-purpose tooth pattern grips anything from fine gauge wire to a 3/4" nut
- Nickel plated steel jaws

Part #	LIST
AC285	$147.10

AC175 Alligator Clip Set

Slide-on alligator clips (red, black) compatible with TL71, TL75, TL175 and TP175. Insulated alligator clip jaws provide 8 mm opening with flexible boots. CAT III 1000 V, CAT IV 600 V, 10 A rating.



Part #	LIST
AC175	$156.90

TEST LEADS, PROBES & CLIPS

FLUKE

Test Lead and Probe Sets

TL71 Premium DMM Test Lead Set



- Flexible silicone insulated leads are heat and cold resistant
- Distinctive comfort grip probes
- Recommended for µV measurements

Part #	LIST
TL71	$143.80

TL223 Electrical Test Lead Set



- Starter kit for electrical applications
- Includes 1 pair: AC220, TP1, TL224

Part #	LIST
TL223	$360.00

TL175 Hard Point Test Lead Set



- Extremely hard alloy tips resist wear
- Distinctive comfort grip probes
- Economical PVC insulated leads

Part #	LIST
TL175	$150.40

TL76 2/4 mm Tip Test Lead Set

- 2 mm threaded probes with removable 4 mm diameter spring contacts
- Includes GS38 style probe tip cover
- CAT III, 1000V, 10A; CAT IV, 600V, 10A

Part #	LIST
TL76	$171.60



TL220 Industrial Test Lead Set



- Starter kit for industrial applications
- Includes 1 pair: C220,TP220,TL222

Part #	LIST
TL220	$360.00

TL81A Deluxe Electronic Test Lead Set

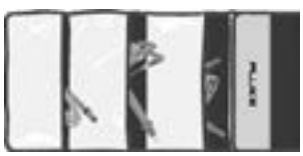

- 22 piece set with quadfold pouch
- Probes, alligator clips, tip extenders, pincers, clips, leads and adapters for virtually every electronic need

Part #	LIST
TL81A	$709.00

SAFETY PRODUCTS

Hearing Protection

Nextera Over-the-Head Earmuff

- NRR=29 outstanding full spectrum attenuation
- Very low profile
- Soft-Seal™ ear cushions
- Very low headband force assures maximum comfort



Part #	LIST
3006-DSS	$107.70

Contra Band™ Inner Aural Hearing Protector

- NRR=22
- Super soft gel ear tips provide maximum comfort



Part #	LIST
2299-DSS	$13.90

Knee Pads

True Flex Gel Knee Pad/ Each

Uniquely jointed to flex with the natural motion of the True Flex Safety Knee Pad provides the ultimate in comfort and protection for the most extreme work envirnments. With "Gel-Zone" insert.



Part #	LIST
KP-340-KNY	$149.00

Eye Protection Edge Eyewear



TXR-XL416CF



TSDK41CK



DZ411



XR411



DZ417



TXB436

Part #	Description	LIST
TXR-XL416CF	Robson XL - Forest Camo Frame / Polarized Smoke Lenses	$103.60
XB416CF	Brazeau - Forest Camo Frame / Smoke Lenses	
TXB416CF	Brazeau - Forest Camo Frame / Polarized Smoke Lenses	
XR416CF	Robson - Forest Camo Frame / Smoke Lenses	$47.80
TXR416CF	Robson - Forest Camo Frame / Polarized Smoke Lenses	
HT416VSGCF	Steele - Forest Camo Frame with Gasket / Smoke Vapor Shield© Lenses	$83.80
TSDK41CK	Khor Forest Camo Kit - Forest Camo Frame / Polarized Smoke, Anti-Reflective, Yellow Lenses	$132.10

Part #	Description	LIST
DZ411-1.5	Zorge - Black Frame / Clear 1.5 Magnification Lenses	-
DZ411-2.0	Zorge - Black Frame / Clear 2.0 Magnification Lenses	-
XR412	Robson - Black Frame / Yellow Lenses	$43.40
DZ411	Zorge - Black / Clear Lens	-
DZ417	Zorge - Black / Silver Mirror Lens	
TXRAP418	Robson - Black / AP Blue Mirror Lens	$99.00
TXB436	Brazeau Torque Polarized - Black / Smoke Lens	

SAFETY PRODUCTS

Respirators Air Purifying Respirators

North 7700 series is the most comfortable half mask respirator available today. The facepiece is made of soft, hypoallergenic silicone. Because silicone is so much more flexible than organic rubber, it conforms to a worker's face.



Part #	Description	LIST
7700-30M	air purifying respirator	$107.00

Particulate Filters

Pancake P100 any particulates filter (HEPA) - 99.97% minimum filter efficiency



Part #	Description	LIST
75FFP100	particulate filter	$24.60

Combination Gas & Vapour Cartridges and P100 Particulate Filters

Multi-purpose cartridge for organic vapors, chlorine, hydrogen chloride, sulfur dioxide, hydrogen sulfide (escape), hydrogen fluoride, chlorine dioxide, ammonia, methylamine and formaldehyde.



Part #	Description	LIST
75SCP100	with multi purpose P100 particulate filter (99.97% minimum filter efficiency)	$92.60

Work Gloves

Part #	Description	LIST
20-1-10008-M/LXL	Performance Gloves	$77.00
20-1-103-S/M/L	Ladies Gloves	$70.70
20-1-10605B-S/M/L/XL	Performance Gloves w/Gel Pak	$36.90
20-1-1200-M/L/XL	Mechanics Gloves	$18.30
20-1-1215-S/M/L/XL	Mechanics Gloves	$31.10
60-1-650L	Welders Long Cuff Gloves	$34.70
99-1-275BP-(8/9/10)	Grander Coated Gloves	$6.50
99-1-912	PVC Gloves - 12" Gauntlet	$12.00
99-1-9730-(7/8/9/10)	Cut Resist. Work Gloves	$25.90
99-1-9761-(8/9/10)	Cut Resist. Work Gloves	
99-1-9800-(8/9)	Cut Resist. Work Gloves	$5.70
99-1-9802(8/9/10)	Coated Nylon Gloves	$3.80
99-1-9860(7/8/9/10)	Coated Palm Work Gloves	$9.30



20-1-10605B



60-1-650L



99-1-9729

SAFETY PRODUCTS

Disposable Gloves



Part #	Description	LIST
5554PF-M/L/XL	Black Nitrile Gloves. 100/pack	$45.00
5555PF-M/L/XL/XXL	Heavy Nitrile Gloves. 50/pack	$45.00

Protective Clothing

Traffic Safety Vest



Part #	Description	LIST
7825376	Saftey Vest - Lime Green	$26.50
7825301	Saftey Vest - Orange	$34.80

CSA Hard Hat



High density polyethyene outer shell, designed to provide all around limited impact and penetration protection. Ratchet mechanism to fit head size. Meets and exceeds all tests requirements of the new CSA Z94.1.05 (Canadian lateral protective helmet standard).

Part #	Description	LIST
49931	Omega-type2-CSA White	$83.40
49936	Omega-type2-CSA BLUE	$83.40

Lockouts

Lockout Hasps



45200 Klein Tempered-Steel Lock-outs with Interlocking tabs. Six-hole locking bodies, holes accept up to 5/16" diameter shackles, 1" closed hasp I.D.

Part #	LIST
45200	$25.80

Lockout Tags



Tags are 3" x 5-3/4"

Part #	LIST
ELA-2901	

Circuit Breaker Lockouts

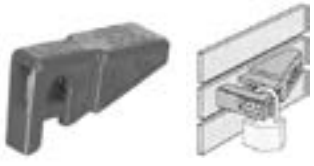

Part #	Size	LIST
CB03-NFL	CB-03 - A single pole lockout. The CB-03 does not require a switch breaker with a recessed hole in it.	$20.00

Padlocks



Individually keyed.

Part #	Size	LIST
225-1530-DYN	30mm KD Carded	$17.90
225-1550-DYN	50mm KD Carded	$49.20

Maintain Refrigerant Records with SAFEGUARD™ Documentation Systems

Discover the easiest, most cost-effective way to help you comply with government regulations!

- **A** Servicing Date
- **B** Job / Location / Phone Number
- **C** Equipment Serial Number
- **D** Technician Certification Number
- **E** Type and Amount of Refrigerant Used
- **F** Additional Distribution Columns to Track Reclaimed, Recovered, and Recycled Refrigerants
- **G** Date, Type, and Amount of Refrigerant Purchased
- **H** Leak Repair Information
- **I** Documentation Slip for Attaching to Equipment
- **J** Poly Envelope Containing Documentation Slip for Attaching to Equipment

Part # SAFEGUARD-SAG
Kit contains:
- Binder, 125 Refrigerant Service Tags
- 5 Refrigerant Log Journals
- 100 Adhesive Envelopes

$995.00 LIST

Part # SAFEGUARD-REFILL-SAG
Refill Kit contains:
- 125 Refrigerant Service Tags
- 5 Refrigerant Log Journals
- 100 Adhesive Envelopes

$507.00 LIST

Part # SAFEGUARD-BINDER-SAG **$488.00 LIST**
- Binder

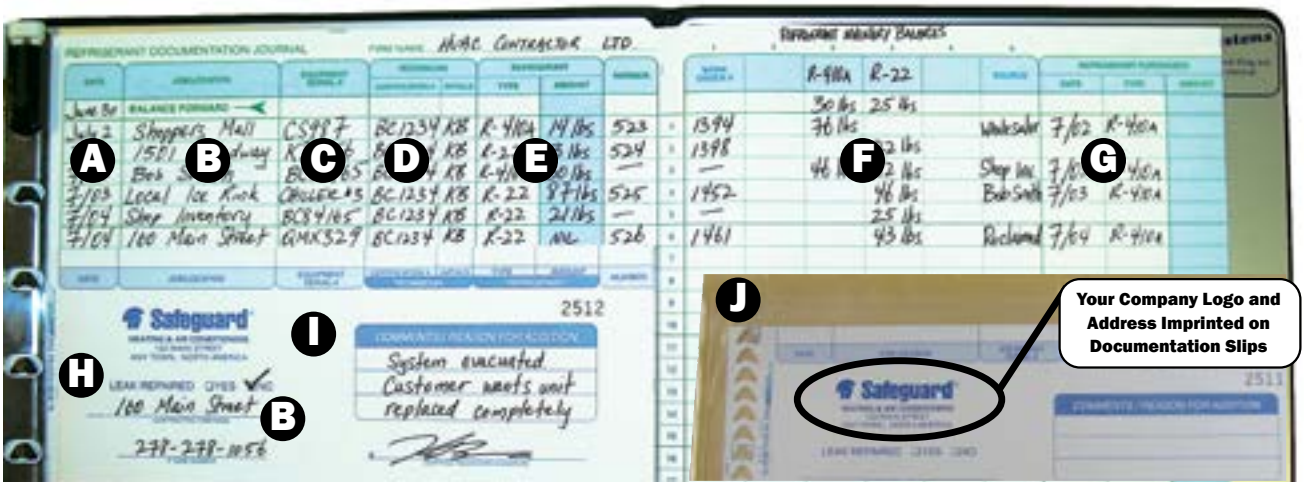

REFERENCES

Conversion Factors 920-922

Quick Selection Guide 923-924

Formulas 925-926

Gears and Belt Lengths Guide 927

Temperature Conversion Chart 928

Canada Regulations on Refrigerants 929

Pressure Temperature Chart 930-931

Bluon General Replacement Guide 932

Chemours Line Sizing 933-940

Refrigerant Piping Guide 942-943

NU-CALGON Refrigeration Oil Cross Reference Guide 947-950

Weight of Refrigerant in Copper Pipe 951

Capillary Tubing 952-954

CONVERSION FACTORS

MULTIPLY	BY	OBTAIN
atmospheres	76.0	cms mercury
atm	29.92	ins mercury
atm	33.90	ft water
atm	1.0333	kgs/sq cm
atm	14.70	lbs/sq in
atm	1.058	tons/sq ft
Barrels-Oil	42	gals-oil
BT Units	0.2520	kgs-calories
BTU's	777.5	ft-lbs
BTU's	3.927×10^{-4}	hp-hrs
BTU's	107.5	kg-meters
BTU's	2.928×10^{-4}	kw-hrs
BTU Min	12.96	ft-lbs/sec
BTU/min	0.2356	hp
BTU/min	0.01757	kw
BTU/min	17.57	watts
Centimeters	0.3937	inches
cm	0.01	meters
cm	10	mm
Cms Mercury	0.01316	atm
cms mercury	0.4461	ft water
cms mercury	136.0	kgs/sq meter
cms mercury	27.85	lbs/sq ft
cms mercury	0.1934	lbs/sq in
Cms/Second	1.969	ft/min
cms/second	0.03281	ft/sec
cms/second	0.036	km/hr
cms/second	0.6	meters/min
cms/second	0.02237	miles/hr
cms/second	3.728×10^{-4}	miles/min
Cms/Sec/Sec	0.03281	ft/sec/sec
Cubic Cms	3.531×10^{-5}	cu ft
cu cms	6.102×10^{-2}	cu in
cu cms	10^{-6}	cu meters
cu cms	1.308×10^{-6}	cu yds
cu cms	2.642×10^{-4}	gals
cu cms	10^{-3}	liters
cu cms	2.113×10^{-3}	pints (liq)
cu cms	1.057×10^{-3}	quarts (liq)
Cubic Feet	2.832×10^{4}	cubic cms
cu ft	1728	cu inches
cu ft	0.02832	cu meters
cu ft	0.03704	cu yds
cu ft	7.48052	gals
cu ft	28.32	liters
cu ft	59.84	pints (liq)
cu ft	29.92	quarts (liq)
Cu Ft/min	472.0	cu cms/sec
cu ft/min	0.1247	gals/sec
cu ft/min	0.4720	liters/sec
cu ft/min	62.43	lbs w/min

MULTIPLY	BY	OBTAIN
Cu Ft/Sec	0.646317	Million gals/day
cu ft/sec	448.831	gals/min
Cu inches	16.39	cc
cu ins	5.787×10^{-4}	cu ft
cu ins	1.639×10^{-5}	cu meters
cu ins	2.143×10^{-5}	cu yds
cu ins	4.329×10^{-3}	gals
cu ins	1.639×10^{-2}	liters
cu ins	0.03463	pints (liq)
cu ins	0.01732	quarts (liq)
Cu Meters	10^{6}	cc
cu M	35.31	cu ft
cu M	61.023	cu ins
cu M	1.308	cu yds
cu M	264.2	gals
cu M	10^{3}	liters
cu M	2113	pints (liq)
cu M	1057	quarts (liq)
Cu Yards	7.646×10^{5}	cu cms
cu yds	27	cu ft
cu yds	46.656	cu ins
cu yds	0.7646	cu meters
cu yds	202.0	gals
cu yds	764.6	liters
cu yds	1616	pints (liq)
cu yds	807.9	quarts (liq)
Decimeters	0.1	meters
Degs (Angle)	60	minutes
degs (angle)	0.01745	radians
degs (angle)	3600	secs
Degrees Sec	0.01745	radians/sec
degs/sec	0.1667	revs/min
degs/sec	0.002778	revs/sec
Fathoms	6	ft
Feet	30.48	cms
ft	12	ins
ft	0.3048	meters
ft	1/3	yds
Ft of Water	0.02950	atms
ft of w	0.8876	ins mercury
ft of w	0.08048	kgs/sq cm
ft of w	62.43	lbs/sq ft
ft of w	0.4335	lbs/sq in
Feet/Min	0.5080	cms/sec
ft/min	0.01667	ft/sec
ft/min	0.01829	kms/hrs
ft/min	0.3040	ms/min
ft/min	0.01136	miles/hr
Ft/Sec/Sec	30.48	cms/sec/sec
ft/sec/sec	0.3048	ms/sec/sec

CONVERSION FACTORS

MULTIPLY	BY	OBTAIN
Ft Pounds	1.286×10^{-3}	BTU's
ft lbs	5.050×10^{-7}	hp-hrs
ft lbs	3.241×10^{-4}	kg-calories
ft lbs	0.1383	kg-meters
ft lbs	3.766×10^{-7}	kw-hrs
Ft-Lbs/Min	1.286×10^{-3}	BTUs/min
ft-lbs/min	0.01667	ft-lbs/sec
ft-lbs/min	3.030×10^{-5}	hp
ft-lbs/min	3.241×10^{-4}	kg-calories/min
ft-lbs/min	2.260×10^{-5}	kws
Ft-Lbs/Sec	7.717×10^{-3}	BTUs/min
ft-lbs/sec	1.818×10^{-3}	hp
ft-lbs/sec	1.945×10^{-2}	kg-calories/min
ft-lbs/sec	1.356×10^{-3}	kws
Gallons	3785	ccs
gals	0.1337	cu ft
gals	231	cu ins
gals	3.784×10^{-3}	cu meters
gals	3.785	liters
gals	8	pints (liq)
gals	4	quarts (liq)
Gallons, Imp	1.20095	US gals
Gallons, US	0.83267	imp gals
Gallons Water	8.3453	lbs water
Gallons/Min	2.228×10^{-3}	cu ft/sec
gals/min	0.06308	liter/sec
gals/min	8.0208	cu ft/hr
Gals Water/Min	6.0086	tons water/24 hrs
Grams		dynes
grams		grains
grams	10^{-3}	kgs
grams	10^{3}	milligrams
grams	0.03527	ozs
grams	0.03215	ozs (troy)
grams	2.205×10^{-3}	lbs
Grams/Cm	5.600×10^{-3}	lbs/in
Grams/Cu Cm	62.43	lbs/cu ft
grams/cu cm	0.03613	lbs/cu in
Grams/Liter	58.417	grains/gal
grams/liter	8.345	lbs/1000 gals
grams/liter	0.062427	lbs/cu ft
grams/liter	1000	parts/million
Horsepower	42.44	BTUs/min
hp	33.000	ft-lbs/min
hp	550	ft-lbs/sec
hp	1.014	hp (metric)
hp	10.70	kg-calories/min
hp	0.7457	kws
hp	745.7	watts

MULTIPLY	BY	OBTAIN
Hp-Hours	2547	BTUs
hp-hrs	1.98×10^{6}	ft-lbs
hp-hrs	641.7	kg-calories
hp-hrs	2.737×10^{5}	kg-meters
hp-hrs	0.7457	kw-hrs
Inches	2.540	cms
Ins Mercury	0.03342	atms
ins mercury	1.133	ft water
ins mercury	0.03453	kgs/sq cm
ins mercury	70.73	lbs/sq ft
ins mercury	0.4912	lbs/sq in
Ins of Water	0.002458	atms
ins of w	0.07355	ins mercury
ins of w	0.002540	kgs/sq cm
ins of w	0.5781	ozs/sq in
ins of w	5.202	lbs/sq ft
ins of w	0.03613	lbs/sq in
Kilograms	980.665	dynes
kgs	2.205	lbs
kgs	1.102×10^{-3}	tons (short)
kgs	10^{3}	grams
Kgs/Sq Cm	0.9678	atms
kgs/sq cm	32.81	ft water
kgs/sq cm	28.96	ins mercury
kgs/sq cm	20.48	lbs/sq ft
kgs/sq cm	14.22	psi
Kiloliters	10^{3}	liters
Kilometers	10^{5}	cms
kms	3281	ft
kms	10^{3}	meters
kms	0.6214	miles
Kms Hr	27.78	cms/sec
kms hr	54.68	ft/min
kms hr	0.9113	ft/sec
kms hr	16.67	meters/min
kms hr	0.6214	miles/hr
Kms/Hr Sec	27.78	cms/sec/sec
kms/hr sec	0.9113	ft/sec/sec
kms/hr sec	0.2778	Ms/sec/sec
Kilowatts	56.92	BTUs/min
kws	4.425×10^{4}	ft-lbs/min
kws	737.6	ft-lbs/sec
kws	1.341	hp
kws	14.34	kg-calories/min
kws	10^{3}	watts
Kilowatt-Hrs	3415	BTUs
kw-hrs	2.6655×10^{6}	ft-lbs
kw-hrs	1.341	hp-hours
kw-hrs	860.5	kg-calories
kw-hrs	3.671×10^{5}	kg-meters

CONVERSION FACTORS

MULTIPLY	BY	OBTAIN
Liters	10^{3}	ccs
liters	0.03531	cu ft
liters	61.02	cu ins
liters	10^{-2}	cu meters
liters	0.2642	gals
liters	1.057	quarts (liq)
Liters/Min	4.403×10^{-3}	gals/sec
Meters	100	cms
meters	3.281	ft
meters	39.37	ins
meters	10^{-3}	kms
meters	10^{3}	mms
Meters/Min	1.667	cms/sec
meters/min	3.281	ft/min
meters/min	0.05468	ft/sec
meters/min	0.06	kms/hr
meters/min	0.03728	miles/hr
Meters/Sec	196.8	ft/min
meters/sec	3.281	ft/sec
meters/sec	3.6	kms/hr
meters/sec	0.06	kms/min
meters/sec	2.237	miles/hr
meters/sec	0.03728	miles/min
Microns	10^{-6}	meters
microns	25.400	in
Miles/Hr	44.70	cms/sec
miles/hr	88	ft/min
miles/hr	1.467	ft/sec
miles/hr	1.609	kms/hr
miles/hr	0.8684	knots
miles/hr	26.82	metersl/min
Millimeters	0.1	cms
mms	0.03937	ins
Mins (Angle)	2.909×10^{-4}	radians
Ounces	16	drams
ozs	437.5	grains
ozs	0.0625	lbs
ozs	28.349527	grams
ozs	0.9115	ozs (troy)
ozs	2.790×10^{-5}	tons (long)
ozs	2.835×10^{-5}	tons (metric)
Ozs (Fluid)	1.805	cu in
ozs (fluid)	0.02957	liters
Pounds	16	ozs
lbs	256	drams
lbs	7000	grains
lbs	0.0005	tons (short)
lbs	453.5924	grams
lbs	1.21528	lbs (troy)
lbs	14.5833	ozs (troy)
lbs	0.455	kg

MULTIPLY	BY	OBTAIN
Lbs of Water	0.01602	cu ft
lbs of water	27.68	cu in
lbs of water	0.1198	gals
Lbs of w/Min	2.679×10^{-4}	cu ft/sec
Pounds/Cu Ft	5.787×10^{-4}	lbs/cu in
Pounds/Cu In	1728	lbs/cu ft
Pounds/Sq In	0.06804	atms
lbs/sq in	2.307	ft water
lbs/sq in	2.036	in mercury
lbs/sq in	0.07031	kgs/sq cm
Radians	57.29578	degrees
Tons (Long)	1016	kgs
tons (long)	2240	lbs
tons (long)	1.12000	tons (short)
Tons (Short)	2000	lbs
tons (short)	907.18486	kgs
tons (short)	2430.56	lbs (troy)
tons (short)	0.89287	tons (long)
tons (short)	29166.66	ozs (troy)
tons (short)	0.90718	tons (metric)
Watts	0.05692	BTUs/min
watts	44.26	ft-lbs/min
watts	0.7376	ft-lbs/sec
watts	1.341×10^{-3}	hp
watts	0.01434	kg-calories/min
watts	10^{-3}	kws
Watt-Hours	3.415	BTUs
watt-hrs	2655	ft-lbs
watt-hrs	1.341×10^{-3}	hp-hrs
watt-hrs	0.8605	kg-calories
watt-hrs	367.1	kg-meters
watt-hrs	10^{-3}	kw-hrs

Temperature Conversion Fahrenheit And Centigrade

To convert Fahrenheit to Celsius (Centigrade):

[illegible] x (°F − 32) = °C

To convert Celsius (Centigrade) to Fahrenheit:

[illegible] °C × 1.8) + 32 = °F

°C	°F	°C	°F
-30	-22	40	104
-25	-13	45	113
-20	-4	50	122
-15	5	55	131
-10	14	60	140
-5	23	65	149
0	32	70	158
5	41	75	167
10	50	80	176
15	59	85	185
20	68	90	194
25	77	95	203
30	86	100	212
35	95	105	221

QUICK SELECTION GUIDE

Tips for Quick Selection Guide

Walk-In Cooler Box Load Parameters

1. 95°F ambient air temperature surrounding box
2. 4" styrene (R=16.7, K=.24) walls/ceiling, 6" concrete slab floor
3. Average product load with 5°F pulldown in 24 hours
4. BTUH load based on 16-18 hour compressor run time for 35°F box (timer recommended) +20 hrs. for 30°F box
5. See Table C for adjustment to box load for glass doors
6. For 80°F ambient temp. surrounding box deduct 12%
7. For 4" Urethane walls + ceiling, 6" concrete slab floor deduct 12%
8. For 10' ceiling height add 10%
9. For additional BTUH load for product cooling see Table A

Walk-In Freezer Box Load Parameters

1. 95°F ambient air temperature surrounding box
2. 4" urethane (R=25, K=.16) walls, ceiling + floor
3. Average product load with 10°F pulldown in 24 hours
4. BTUH load based on 18 hour compressor run time
5. See Table C for adjustment to box load for glass doors
6. For 80°F ambient temp. surrounding box deduct 12%
7. For 20 hour compressor run time (light frost load) in lieu of 18 hour run time, deduct 11%
8. For 10' ceiling height add 10%
9. For additional BTUH load for product cooling see Table D

Table A Product Cooling Loads for Walk-In Coolers

(24 hour pulldown) / 18 hour compressor operation) 24% safety factor added to loads to allow for service

Product	Specific Heat Above Freezing	10 Degree Pulldown BTUH Load for Indicated lbs of Product per 24 hours					
		500	1000	1500	2000	3000	5000
Beef	.72	240	480	720	960	1440	2400
Pork	.53	177	353	530	706	1060	1767
Veal & Lamb	.76	253	506	760	1012	1520	2533
Poultry	.79	263	526	790	1053	1580	2633
Seafood	.80	267	533	800	1066	1600	2667
Vegetables	.92	307	613	920	1226	1840	3067
Bakery Food	.74	247	494	740	988	1480	2467
Beer	1.00	333	666	1000	1333	2000	3333

For product pulldown greater than 10 degrees, divide pulldown temperature by 10. Multiply this number by the BTUH shown on Table A, then add to box load.

Table B Meat Cutting/Prep Room Load

(BTUH/hr/sq.ft. of floor area)

Floor Sq. Ft.	Approx. 65% R.H. Room Temp.		
	55°F	50°F	
100	93	105	Room loads based on continuous operation and includes allowance for average number of personnel, processing equipment etc., with glass panel in one wall and walls and ceilings insulated with 3" of styrene with box located in air conditioned area. Evaporator should be low outlet velocity type to avoid drafts and should be selected for continuous operation and not less than 30°F evap. temperature
200	88	99	
300	85	95	
400	81	90	
500	78	87	
600	75	85	
700	72	81	
800	69	78	
900	67	75	
1000	65	73	
1200	62	69	

Table C Glass Door Loads

Box Temperature	BTU per Door
+35	1060
+30	960
0	1730
-10	1730
-20	1730

Adjusted for run time load. Multiply number of doors times door load above and add to box load.

Table D Product Freezing Loads for Walk-In Freezers

Product	Specific Heat BTU/lb/°F		Latent Heat BTU/lb	Freezer Temp (F)						
	32 -	32 +			100	300	750	1000	1500	3000
Beef	.72	.40	95	29	790	2370	5925	7900	11850	23700
Pork	.53	.32	60	28	523	1571	3926	5235	7853	15710
Veal & Lamb	.76	.45	100	28	841	2524	6311	8414	12621	25240
Poultry	.79	.42	106	27	878	2636	6590	8787	13181	26360
Seafood	.80	.43	110	28	906	2719	6797	9063	13595	27190
Vegetables	.92	.47	130	30	1053	3159	7898	10530	15795	31590
Bakery Food	.74	.34	53	20	520	1560	3900	5200	7800	15600

Freezing loads based on product entering at 40°F maximum. For a specific pulldown time, the product load BTU/hr may be adjusted by multiplying the above loads by 24 and dividing by the specified pulldown time in hours. To adjust for 0°F freezer temperature, multiply the above loads by 0.97, and for -20°F freezer, multiply by 1.04

QUICK SELECTION GUIDE

Dimensions	Floor Sq. Ft.	+35 Room Usage		+30 Room Usage		0 Room Usage		-10 Room Usage		-20 Room Usage	
		Avg.	Hvy.	Avg.	Hvy.	Avg.	Hvy.	Avg.	Hvy.	Avg.	Hvy.
6 x 6 x 8	36	4750	6389	4488	6037	4583	6505	4929	7041	5274	7577
6 x 8 x 8	48	5417	7274	5119	6974	5225	7407	5630	8028	6034	8648
6 x 10 x 8	60	6055	8100	5722	7655	5806	8213	6265	8911	6725	9609
8 x 8 x 8	64	6188	8291	5848	7835	5934	8410	6405	9127	6876	9844
8 x 10 x 8	80	6954	9269	6572	8759	6631	9363	7165	10169	7699	10974
8 x 12 x 8	96	7669	10174	7247	9614	7273	10234	7867	11123	8461	12011
8 x 14 x 8	112	8366	11045	7905	10437	7922	11092	8575	12059	9227	13026
8 x 16 x 8	128	9051	11888	8553	11234	8528	11890	9237	12933	9946	13976
8 x 18 x 8	144	9748	12732	9212	12032	9169	12732	9936	13852	10702	14972
8 x 20 x 8	160	10419	13548	9846	12803	9755	13490	10576	14682	11397	15874
8 x 22 x 8	176	11540	14807	10905	13992	10817	14715	11692	15977	12567	17239
8 x 24 x 8	192	12224	15622	11552	14763	11386	15439	12314	16769	13242	18099
8 x 26 x 8	208	12874	16398	12166	15496	11976	16176	12955	17573	13935	18970
8 x 28 x 8	224	13519	17163	12775	16219	12530	16873	13562	18336	14594	19799
8 x 30 x 8	240	14187	17947	13407	16960	13108	17587	14191	19115	15274	20642
8 x 32 x 8	256	14824	18694	14009	17666	13653	18264	14786	19855	15920	21446
10 x 10 x 8	100	7789	10339	7361	9770	7386	10401	7990	11304	8594	12208
10 x 12 x 8	120	8626	11385	8152	10759	8138	11405	8809	12401	9481	13397
10 x 14 x 8	140	9439	12384	8920	11703	8887	12405	9626	13493	10365	14581
10 x 16 x 8	160	10250	13379	9686	12643	9577	13311	10379	14484	11182	15658
10 x 18 x 8	180	11049	14349	10441	13560	10279	14216	11144	15472	12009	16728
10 x 20 x 8	200	11838	15299	11187	14458	10942	15070	11868	16405	12794	17741
10 x 24 x 8	240	13391	17180	12654	16207	12751	17231	13796	18721	14842	20211
10 x 28 x 8	280	14891	18922	14072	17881	14043	18844	15205	20482	16367	22120
12 x 12 x 8	144	10038	13021	9486	12305	8991	12553	9739	13655	10486	14756
12 x 14 x 8	168	10956	14155	10353	13376	10235	14052	11055	15251	11875	16450
12 x 16 x 8	192	11886	15284	11232	14443	11029	15082	11919	16375	12810	17667
12 x 18 x 8	216	12775	16359	12072	15459	11807	16080	12767	17464	13726	18847
12 x 20 x 8	240	13681	17440	12928	16481	12573	17052	13599	18524	14626	19995
12 x 22 x 8	264	14549	18474	13749	17458	13299	17974	14392	19541	15485	21088
14 x 14 x 8	196	11993	15423	11333	14575	11126	15216	12024	16521	12923	17826
14 x 16 x 8	224	13013	16656	12297	15740	11995	16338	12971	17745	13946	19152
14 x 20 x 8	280	15011	19042	14185	17795	13687	18487	14811	20088	15935	21688
14 x 24 x 8	336	16969	21347	16036	21073	15330	20539	16598	22324	17866	24110
16 x 16 x 8	256	14148	18019	13370	17028	12939	17550	13998	19067	15056	20583
16 x 20 x 8	320	16349	20631	15450	19496	14777	19873	15996	21598	17215	23323
16 x 24 x 8	374	18506	23157	17488	21883	16563	22093	17938	24017	19313	25941
18 x 18 x 8	324	16476	20782	15570	19639	14864	19989	16090	21724	17317	23460
18 x 20 x 8	360	18128	22644	17131	21398	16305	21678	17617	23523	18930	25369
18 x 24 x 8	432	20484	25389	19357	23993	18260	24090	19739	26149	21219	28208
20 x 20 x 8	400	19470	24145	18340	22817	17386	23019	18790	24982	20194	26945
20 x 24 x 8	480	21988	27132	20779	25640	19453	25566	21036	27755	22619	29945
20 x 28 x 8	560	24963	30480	23590	28804	21963	28514	23721	30922	25479	33330
20 x 32 x 8	640	27480	33340	25969	31506	23954	30909	25884	33529	27813	36149
20 x 36 x 8	720	29946	36127	28299	34140	25919	33251	28017	36077	30115	38903
20 x 40 x 8	800	32420	38904	30637	36764	27888	35575	30153	38603	32518	41631
24 x 40 x 8	960	38694	45735	36565	43878	34681	43023	37368	46538	39939	49937
28 x 40 x 8	1120	43183	50733	40808	48970	38123	47062	41095	50921	43950	54664
32 x 40 x 8	1280	48550	56318	45880	55056	42894	51900	46146	56580	49282	60656
36 x 40 x 8	1440	54344	62804	51355	61626	46254	56259	49872	60781	53194	65186
40 x 40 x 8	1600	58738	67611	55507	66608	49583	60073	53385	64916	57070	69642

*Heavy usage is defined as two times the average air change. Average air changes determined by ASHRAE based on box size for 24 hour period

FORMULAS

Formulas - Electrical

VOLTS =

Amps × Ohms | Watts / Amps | √(Watts × Ohms)

AMPS =

Volts / Ohms | Watts / Volts | √(Watts / Ohms)

WATTS =

Volts × Amps | Amps² × Ohms | Volts / Ohms

OHMS =

Volts / Amps | Volts² / Watts | Watts / Amps²

Power Factor = KW / KVA = Cos θ

	Single Phase	Three Phase
KW	√(V × A × PF) / 1000	√(3 × V × A × PF) / 1000
KVA	V × A / 1000	√(3 × V × A) / 1000
AMPS	KVA × 1000 / V	KVA × 1000 / √(3 × V)

√3 = 1.73

Approx. Motor KVA = Motor Horsepower (At Full Load)

Capacitors Connected in Parallel: $C_1 + C_2 + C_3 = C$ Total

Capacitors Connected in Series

For Two	More Than Two
$C_1 \times C_2 / C_1 + C_2 = C$ Total	$1/C_1 + 1/C_2 + 1/C_3 = C$ Total

VOLTAGE UNBALANCE

% Voltage Unbalance

100 × Max. Voltage Deviation From Average Voltage / Average Voltage

BOOST TRANS

Rating Plate F.L.A. × Rating Plate VOLTS = KVA

Rating Plate VOLTS / Rating Plate VOLTS — Norm. Line VOLTS = FACTOR

KVA / FACTOR = Trans. KVA Rating

$\left(\frac{V_r}{V_i}\right)^2$ × Heater Rating = Rating @ New Voltage

V_r = Rated Volts, V_i = Measured Volts

Typical Ampere Wire Ratings*

COPPER CONDUCTORS, IN CONDUIT*

AWG MCM	TEMP. RATING OF CONDUCTOR* 60°C*	75°C*	90°C*
14	15	15	25
12	20	20	30
10	30	30	40
8	40	45	50
6	55	65	70
4	70	85	90
3	80	100	105
2	95	115	120
1	110	130	140
1/0	125	150	155
2/0	145	175	185
3/0	165	200	210
4/0	195	230	235
250	215	255	270
300	240	285	300
350	260	310	325
400	280	335	360
500	320	380	405
600	355	420	465
700	385	460	490
750	400	475	500
800	410	490	515
900	435	520	555
1000	455	545	585
1250	495	590	645
1500	520	625	700
1750	545	650	735
2000	560	665	775

* Summary only, refer to NEC 310-16, -17, -18, -19 and other sections for the tables.

Typical Electric Wire Size

MOTOR HP	SINGLE PH. 115 VOLT	SINGLE PH. 230 VOLT	THREE PH. 230 VOLT	THREE PH. 460 VOLT
1-1/3	14	14		
1/2	14	14	14	14
3/4	12	14	14	14
1	12	14	14	14
1-1/2	10	14	14	14
2		12	14	14
3		10	14	14
5			12	14
7-1/2			10	14
10			8	12

From Standards of the National Board of Fire Underwriters

Correction Table For Watts - Amperes - Volts

WATTS	VOLTAGE (C - Single Phase) 120	208	240	277
	AMPERES			
500	4.2	2.4	2.1	1.8
1000	8.3	4.8	4.2	3.6
1500	12.5	7.2	6.3	5.4
2000	16.7	9.6	8.3	7.2
2500	20.9	12.0	10.4	9.0
3000	25.0	14.4	12.5	10.8
3500	29.2	16.8	14.6	12.5

FORMULAS

Electrical Units

Source: United States Bureau of Standards

The watt is the unit expressing electrical power as horsepower (hp) in mechanics; it is equal to the product of the volts (pressure) times amperes (rate of flow). Thus, 2 volts times 2 amperes would equal 4 watts in a direct current circuit. Electrical energy is sold at so much per watt hour or more generally at a given amount per kilowatt hour - which means 1,000 watt hours. This may represent 1 watt for 1,000 hours or 1,000 watts for one hour. 746 watts are equal to one horsepower or inversely 1 kilowatt (kw) is equal to about 1-1/2 horsepower.

Horsepower represents the power required to lift a weight of 33,000 lbs. 1 foot in 1 minute or 550 lbs. 1 foot in 1 second.

The ohm is the unit of electrical resistance and represents the physical property of a conductor which offers a resistance to the flow of electricity, permitting just 1 ampere to flow at 1 volt of pressure.

Electric Heating Correction Factor

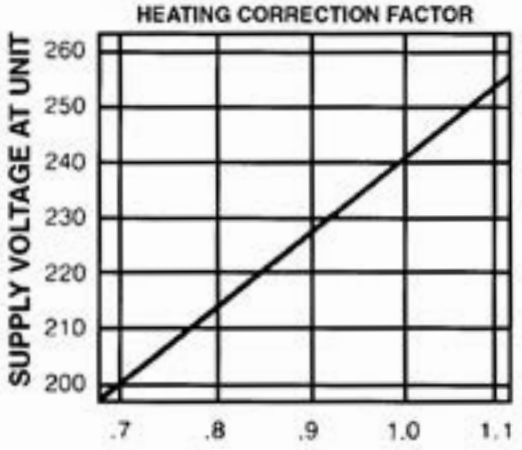

Capacity Correction Factor

For correction of unit output, multiply the correction factor times the KW rating at 240 volts.

$$TR = \frac{3160 \times KW \times VC}{CFM} \quad \text{or} \quad CFM = \frac{3160 \times KW \times VC}{TR}$$

Where:

- *TR* = *temp rise, F°*
- *3160* = *constant*
- *KW* = *KW rating above*
- *CFM* = *air flow at specified conditions*
- *VC* = *heating correction factor*

Formulas – Cooling Capacity *

Total BTUH = CFM x (THC_1 - TCH_2) x 4.5
THC = Total Heat Content or Enthalpy (BTU per lb. of air)

Sensible BTUH = CFM x (T_1 - T_2) x 1.08
T = Dry Bulb Temp (Degrees Fahrenheit)

Latent BTUH = CFM x (W_1 - W_2) x .683
W = Specific Humidity (Grains H_2O per lb. of air (See Psychrometric Chart)

* Based on standard air at 13.3 cubic feet per lb.

Formulas - Heating Capacity*

BTUH = CFM x 1.08 X Rise

$$Cfm = \frac{BTUH\ Output}{108 \times Rise}$$

$$Rise = \frac{BTUH\ Output}{108 \times Cfm}$$

$$CFM = \frac{BTU\ /\ Hr.\ Input}{135 \times \Delta T}$$ Indoor Furnace 80%

$$CFM = \frac{BTU\ /\ Hr.\ Input}{144 \times \Delta T}$$ Outdoor Furnace 75%

$$CFM = \frac{KW \times 3415}{108 \times \Delta T}$$ Electric Heat 92%

* Based on standard air at 13.3 cubic feet per lb.

Formulas - General Subjects

Area of Circle = $3.14 \times R^2$

Circumference of Circle = $3.14 \times Dia.$

Area of Sphere = $3.14 \times (Dia.)^2$

Volume of Sphere = $0.524 \times (Dia.)^3$

Horsepower Conversion Chart

To convert decimal horsepower to commonly available fractional horsepower motors.

DECIMAL HORSEPOWER																
0.010	0.014	0.017	0.020	0.025	0.033	00.40	0.050	0.067	0.083	0.100	0.125	0.167	0.250	0.333	0.500	0.750	1.000
FRACTIONAL HORSEPOWER																	
1/100	1/70	1/60	1/50	1/40	1/30	1/25	1/20	1/15	1/12	1/10	1/8	1/6	1/4	1/3	1/2	3/4	1

HOW TO DETERMINE SIZE & SPEED OF PULLEYS OR GEARS & BELT LENGTHS

The driving pulley is called the Driver and the driven pulley the Driven

To determine the diameter of Driver, the diameter of the Driven and its revolutions, and also revolutions of the Driver being given:

$$\frac{\text{Diam. of Driven x revolutions of Driven}}{\text{Revolutions of Driver}} = \text{Diam. of Driver}$$

To determine the diameter of Driven, the revolutions of the Driven and diameter, and revolutions of the Driver being given:

$$\frac{\text{Diam. of Driver x revolutions of Driver}}{\text{Revolutions of Driven}} = \text{Diam. of Driven}$$

To determine the revolutions of Driver, the diameter and revolutions of the Driven, and diameter of the Driver being given:

$$\frac{\text{Diam. of Driven x revolutions of Driven}}{\text{Diameter of Driver}} = \text{Rev. of Driver}$$

To determine the revolutions of Driven, the diameter and revolutions of the Driver, and diameter of the Driven being given:

$$\frac{\text{Diam. of Driver x revolutions of Driver}}{\text{Diameter of Driven}} = \text{Rev. of Driven}$$

To find OD belt length:

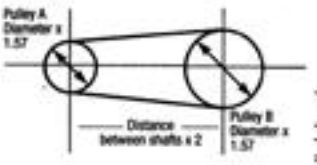

BELT LENGTH FORMULA
Pulley A x 1.57
+ Pulley B x 1.57
+ Distance between shafts x 2
= Belt Length

OD of small pulley + OD of large pulley x 1.57 + twice the distance between shaft centers = OD belt length

---

BLOWER TIPS

- Formula for determining blower speed:

$$\text{Blower RPM} = \frac{\text{Motor Pulley P.D.}}{\text{Blower Pulley P.D.}} \times \text{Motor RPM}$$

- You cannot bench test a blower at free air as it will probably overload motor
- If you double the RPM of a fan or blower you would:
  - Get **twice** the *CFM*
  - Get **four** times the *SP*
  - Require **eight** times the *HP*
- When giving the dimensions of a wheel:
  - **First** dimension should be diameter
  - **Second** dimension stated should be width
- **Specifying Rotation:**
  Double Inlet Wheel = Viewing Hub Side
  Single Inlet Wheel = Viewing Back Plate



TEMPERATURE CONVERSION CHART

Fahrenheit-Celsius temperature conversion chart

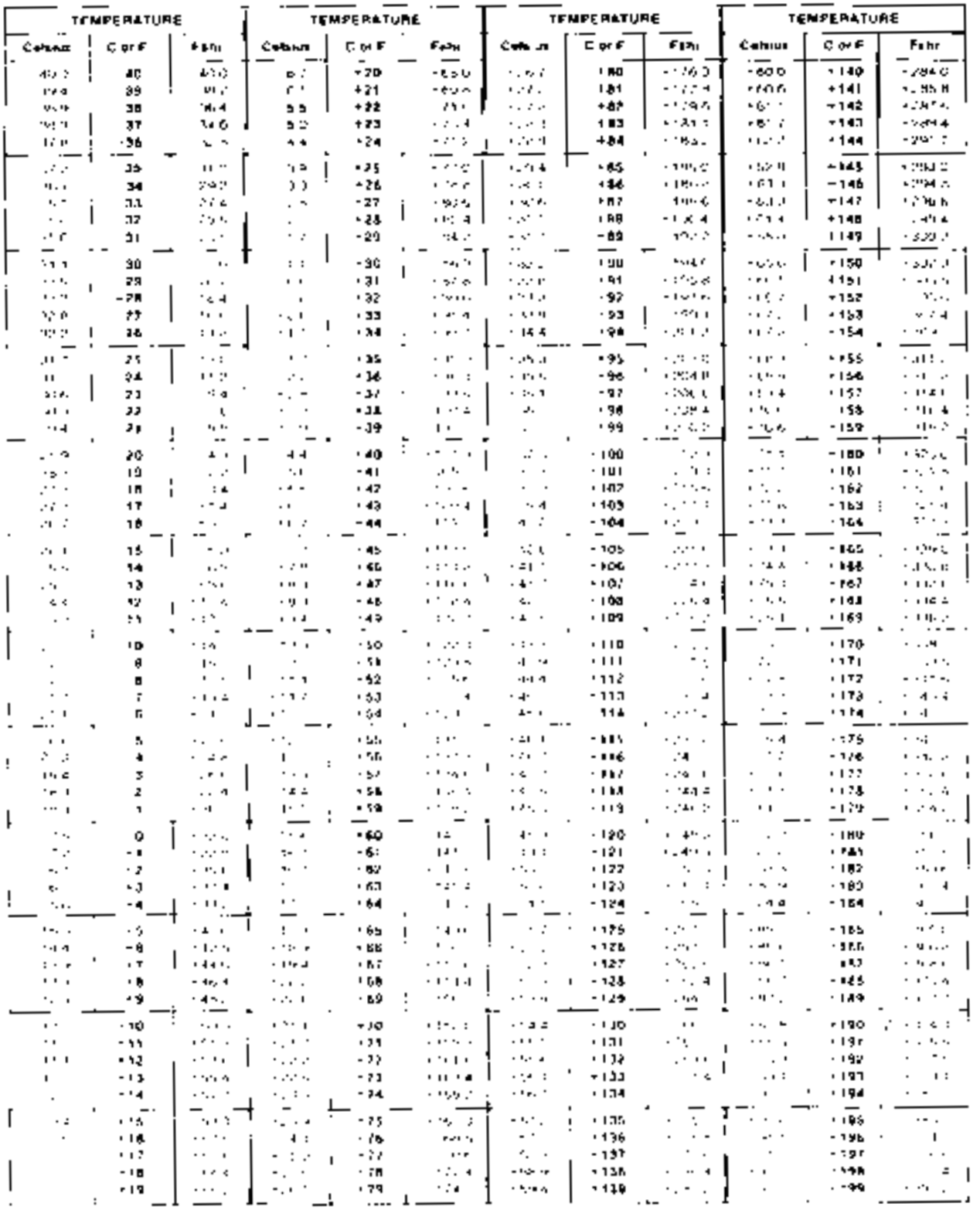

CANADA REGULATIONS - REFRIGERANTS

Summary of Environment and Climate Change Canada Regulations Pertaining to Refrigerants

Chemours™

On October 18, 2017, Environment and Climate Change Canada published amendments to the ODSHAR regulations. These amendments will come into force on April 16, 2018. These regulations will adopt a phasedown, but NOT A PHASEOUT, of hydrofluorocarbons (HFCs) in alignment with the United Nations Kigali Amendment to the Montreal Protocol. The regulations also contain product-specific controls by end use that apply to new equipment only.

This regulation does not require the phaseout of HFC manufacturing.

Canada HFC Phasedown

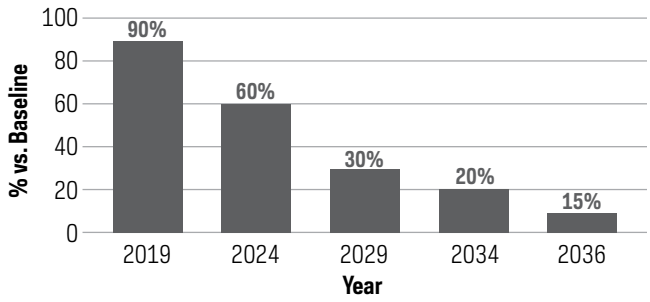

Baseline is determined from the average imports of HFCs plus 15% of HCFCs in 2011, 2012, and 2013.

Product-Specific Controls for New Equipment

End Use	Application	Date	GWP Limit of Refrigerant*
Stand-alone, medium-temperature refrigeration system: Self-contained refrigeration system with components that are integrated within its structure and designed to maintain an internal temperature of ⩾0 °C	(a) Commercial or industrial (b) Residential	January 1, 2020 January 1, 2025	1400 150
Stand-alone, low-temperature refrigeration system: Self-contained refrigeration system with components that are integrated within its structure and designed to maintain an internal temperature <0 °C, but >-50 °C	(a) Commercial or industrial (b) Residential	January 1, 2020 January 1, 2025	1500 150
Centralized refrigeration system: Refrigeration system with a cooling evaporator in the refrigerated space connected to a compressor rack located in a machinery room and a condenser located outdoors and designed to maintain an internal temperature at ⩾50 °C	Commercial or industrial	January 1, 2020	2200
Condensing units: Refrigeration system with a cooling evaporator in the refrigerated space connected to a compress and condenser unit that are located in a different location and designed to maintain an internal temperature at ⩾-50 °C	Commercial or industrial	January 1, 2020	2200
Chiller: Refrigeration or air-conditioning system that has a compressor, evaporator, and secondary coolant other than an adsorption chiller	Commercial or industrial	January 1, 2025	750
Mobile refrigeration system: Refrigeration system that is normally attached to or installed in or operates in or with means of transportation	Commercial or industrial	January 1, 2025	2200

*IPCC Fourth Assessment Report, AR4

Existing equipment, service, and retrofit will not be impacted by the product-specific controls.

PRESSURE-TEMPERATURE CHART

R-22 Replacements

Key: " (in of Hg) = Vacuum
Black (psig) = Saturated Vapor (calculate Superheat)
Bold (psig) = Saturated Liquid (calculate Subcooling)

Chemours™

°F	Freon™ 22 (R-22)	Opteon™ XP40 (R-449A)	Freon™ M029 (R-422D)	Freon™ 407A (R-407A)	Freon™ M099 (R-438A)	Freon™ 407C (R-407C)	Freon™ 410A (R-410A)
-50	6.1"	7.4"	9.2"	9.0"	11.4"	11.0"	4.9
-48	4.8"	6.1"	7.9"	7.7"	10.3"	9.8"	5.9
-46	3.4"	4.7"	6.6"	6.4"	9.1"	8.6"	7.1
-44	1.9"	3.2"	5.3"	5.0"	7.8"	7.3"	8.2
-42	0.4"	1.7"	3.8"	3.5"	6.5"	6.0"	9.4
-40	0.6	0.1"	2.3"	2.0"	5.2"	4.6"	10.7
-38	1.4	0.8	0.8"	0.4"	3.8"	3.2"	12.0
-36	2.2	1.6	0.4	0.6	2.3"	1.6"	13.3
-34	3.1	2.5	1.2	1.5	0.8"	0.1"	14.7
-32	4.0	3.4	2.1	2.3	0.4	0.8	16.2
-30	4.9	4.4	3.0	3.3	1.2	1.6	17.7
-28	5.9	5.4	3.9	4.2	2.1	2.5	19.3
-26	6.9	6.4	4.9	5.2	3.0	3.5	20.9
-24	8.0	7.5	5.9	6.3	3.9	4.4	22.6
-22	9.1	8.6	7.0	7.4	4.9	5.4	24.4
-20	10.2	9.8	8.1	8.5	5.9	6.5	26.2
-18	11.4	11.0	9.2	9.7	7.0	7.6	28.1
-16	12.6	12.3	10.4	10.9	8.1	8.7	30.0
-14	13.9	13.6	11.7	12.2	9.2	9.9	32.0
-12	15.2	14.9	12.9	13.5	10.4	11.1	34.1
-10	16.5	16.3	14.3	14.9	11.6	12.3	36.3
-8	17.9	17.8	15.6	16.3	12.9	13.7	38.5
-6	19.4	19.3	17.1	17.8	14.2	15.0	40.8
-4	20.9	20.8	18.5	19.3	15.6	16.4	43.2
-2	22.4	22.5	20.1	20.9	17.0	17.9	45.7
0	24.0	24.1	21.7	22.5	18.5	19.4	48.2
2	25.7	25.9	23.3	24.2	20.0	21.0	50.8
4	27.4	27.7	25.0	26.0	21.6	22.6	53.5
6	29.2	29.5	26.7	27.8	23.2	24.3	56.3
8	31.0	31.4	28.5	29.7	24.9	26.1	59.2
10	32.8	33.4	30.4	31.6	26.6	27.9	62.2
12	34.8	35.4	32.3	33.6	28.4	29.8	65.2
14	36.8	37.6	34.3	35.7	30.3	31.7	68.4
16	38.8	39.7	36.4	37.8	32.2	33.7	71.6
18	40.9	42.0	38.5	40.0	34.2	35.7	74.9
20	43.1	44.3	40.7	42.3	36.2	37.9	78.4
22	45.3	46.7	42.9	44.7	38.3	40.1	81.9
24	47.6	49.1	45.2	47.1	40.5	42.3	85.5
26	50.0	51.7	47.6	49.6	42.8	44.7	89.2
28	52.4	54.3	50.1	52.2	45.1	47.1	93.1
30	55.0	56.9	52.6	54.8	47.5	49.6	97.0
32	57.5	59.7	55.2	57.6	49.9	52.1	101.1
34	60.2	62.6	57.9	60.4	52.5	54.8	105.2
36	62.9	65.5	60.6	63.3	55.1	57.5	109.5
38	65.7	68.5	63.5	66.3	57.7	60.3	113.9
40	68.6	71.6	66.4	69.4	60.5	63.2	118.4
42	71.5	74.8	69.4	72.5	63.3	66.1	123.0
44	74.5	78.0	72.5	75.8	66.3	69.2	127.7
46	77.6	81.4	75.6	79.1	69.3	72.3	132.6
48	80.8	84.8	78.9	82.6	72.3	75.5	137.5

°F	Freon™ 22 (R-22)	Opteon™ XP40 (R-449A)	Freon™ M029 (R-422D)	Freon™ 407A (R-407A)	Freon™ M099 (R-438A)	Freon™ 407C (R-407C)	Freon™ 410A (R-410A)
50	84.1	88.4	82.2	86.1	75.5	78.8	142.6
52	**87.4**	**110.8**	**96.1**	**108.2**	**94.6**	**101.7**	**148.4**
54	**90.8**	**115.0**	**99.8**	**112.3**	**98.3**	**105.6**	**153.8**
56	**94.4**	**119.2**	**103.6**	**116.5**	**102.1**	**109.6**	**159.3**
58	**98.0**	**123.5**	**107.4**	**120.8**	**105.9**	**113.7**	**164.9**
60	**101.6**	**128.0**	**111.4**	**125.2**	**109.8**	**117.9**	**170.7**
62	**105.4**	**132.5**	**115.4**	**129.7**	**113.9**	**122.3**	**176.6**
64	**109.3**	**137.2**	**119.6**	**134.3**	**118.0**	**126.7**	**182.7**
66	**113.2**	**142.0**	**123.8**	**139.0**	**122.2**	**131.2**	**188.9**
68	**117.3**	**146.8**	**128.1**	**143.9**	**126.6**	**135.8**	**195.3**
70	**121.4**	**151.8**	**132.6**	**148.8**	**131.0**	**140.5**	**201.8**
72	**125.7**	**156.9**	**137.1**	**153.9**	**135.5**	**145.4**	**208.4**
74	**130.0**	**162.2**	**141.7**	**159.1**	**140.2**	**150.3**	**215.2**
76	**134.5**	**167.5**	**146.5**	**164.4**	**144.9**	**155.4**	**222.2**
78	**139.0**	**172.9**	**151.3**	**169.8**	**149.8**	**160.5**	**229.3**
80	**143.6**	**178.5**	**156.3**	**175.3**	**154.7**	**165.8**	**236.5**
82	**148.4**	**184.2**	**161.4**	**181.0**	**159.8**	**171.2**	**244.0**
84	**153.2**	**190.0**	**166.5**	**186.7**	**165.0**	**176.8**	**251.6**
86	**158.2**	**195.9**	**171.8**	**192.6**	**170.3**	**182.4**	**259.3**
88	**163.2**	**202.0**	**177.2**	**198.7**	**175.7**	**188.2**	**267.3**
90	**168.4**	**208.2**	**182.8**	**204.8**	**181.2**	**194.1**	**275.4**
92	**173.7**	**214.5**	**188.4**	**211.1**	**186.8**	**200.1**	**283.6**
94	**179.1**	**221.0**	**194.2**	**217.6**	**192.6**	**206.3**	**292.1**
96	**184.6**	**227.6**	**200.0**	**224.1**	**198.5**	**212.5**	**300.7**
98	**190.2**	**234.3**	**206.0**	**230.8**	**204.5**	**219.0**	**309.5**
100	**195.9**	**241.1**	**212.2**	**237.6**	**210.6**	**225.5**	**318.5**
102	**201.8**	**248.1**	**218.4**	**244.6**	**216.8**	**232.2**	**327.7**
104	**207.7**	**255.3**	**224.8**	**251.7**	**223.2**	**239.0**	**337.1**
106	**213.8**	**262.5**	**231.3**	**259.0**	**229.7**	**245.9**	**346.7**
108	**220.0**	**270.0**	**237.9**	**266.4**	**236.4**	**253.0**	**356.5**
110	**226.4**	**277.5**	**244.7**	**273.9**	**243.1**	**260.3**	**366.4**
112	**232.8**	**285.2**	**251.6**	**281.6**	**250.1**	**267.6**	**376.6**
114	**239.4**	**293.1**	**258.7**	**289.5**	**257.1**	**275.1**	**387.0**
116	**246.1**	**301.1**	**265.9**	**297.5**	**264.3**	**282.8**	**397.6**
118	**253.0**	**309.3**	**273.2**	**305.6**	**271.6**	**290.6**	**408.4**
120	**260.0**	**317.6**	**280.7**	**314.0**	**279.1**	**298.6**	**419.4**
122	**267.1**	**326.0**	**288.3**	**322.4**	**286.7**	**306.7**	**430.7**
124	**274.3**	**334.7**	**296.0**	**331.1**	**294.4**	**315.0**	**442.1**
126	**281.7**	**343.5**	**303.9**	**339.9**	**302.3**	**323.4**	**453.8**
128	**289.2**	**352.4**	**312.0**	**348.8**	**310.3**	**332.0**	**465.8**
130	**296.9**	**361.5**	**320.2**	**357.9**	**318.5**	**340.7**	**477.9**
132	**304.7**	**370.8**	**328.6**	**367.2**	**326.9**	**349.6**	**490.3**
134	**312.6**	**380.2**	**337.1**	**376.7**	**335.4**	**358.7**	**503.0**
136	**320.7**	**389.9**	**345.8**	**386.3**	**344.1**	**368.0**	**515.9**
138	**329.0**	**399.7**	**354.7**	**396.2**	**352.9**	**377.4**	**529.1**
140	**337.4**	**409.6**	**363.7**	**406.2**	**361.9**	**386.9**	**542.5**
142	**345.9**	**419.7**	**372.9**	**416.3**	**371.0**	**396.7**	**556.2**
144	**354.6**	**430.1**	**382.3**	**426.7**	**380.3**	**406.6**	**570.2**
146	**363.5**	**440.6**	**391.8**	**437.2**	**389.8**	**416.7**	**584.5**
148	**372.5**	**451.2**	**401.5**	**448.0**	**399.4**	**427.0**	**599.0**
150	**381.7**	**462.1**	**411.4**	**458.9**	**409.2**	**437.5**	**613.9**

Properties calculated using REFPROP Ver 9.1, Std Ref Data Program, NIST 2013.
Modifications were made to REFPROP when interaction parameters were not available.

PRESSURE-TEMPERATURE CHART

R-12 and R-502 Replacements

Key: " (in of Hg) = Vacuum
Black (psig) = Saturated Vapor (calculate Superheat)
Bold (psig) = Saturated Liquid (calculate Subcooling)

Chemours™

°F	Freon™ 134a (R-134a)	Opteon™ XP10 (R-513A)	Freon™ M049 *Plus* (R-437A)	Freon™ 507 (R-507A)	Freon™ 404A (R-404A)	Opteon™ XP40 (R-449A)	Freon™ M079 (R-422A)	Freon™ HP80 (R-402A)
-50	18.7"	16.6"	17.0"	0.9	0.1	7.4	2.2	1.1
-48	18.0"	15.8"	16.2"	1.7	0.7	6.1	0.6	1.9
-46	17.3"	14.9"	15.3"	2.6	1.6	4.7	0.5	2.8
-44	16.5"	14.0"	14.4"	3.5	2.4	3.2	1.4	3.7
-42	15.7"	13.1"	13.5"	4.4	3.4	1.7	2.2	4.7
-40	14.8"	12.1"	12.5"	5.4	4.3	0.1	3.1	5.7
-38	13.9"	11.1"	11.5"	6.4	5.3	0.8	4.1	6.8
-36	13.0"	10.0"	10.4"	7.5	6.3	1.6	5.1	7.8
-34	12.0"	8.9"	9.3"	8.6	7.4	2.5	6.1	9.0
-32	10.9"	7.8"	8.1"	9.8	8.5	3.4	7.2	10.1
-30	9.8"	6.6"	6.9"	11.0	9.6	4.4	8.3	11.4
-28	8.7"	5.3"	5.6"	12.2	10.8	5.4	9.5	12.6
-26	7.5"	4.0"	4.3"	13.5	12.0	6.4	10.7	13.9
-24	6.3"	2.6"	2.9"	14.8	13.3	7.5	11.9	15.3
-22	5.0"	1.2"	1.4"	16.2	14.6	8.6	13.2	16.7
-20	3.7"	0.1	0.0"	17.6	16.0	9.8	14.6	18.2
-18	2.3"	0.9	0.8	19.1	17.4	11.0	16.0	19.7
-16	0.8"	1.7	1.6	20.6	18.9	12.3	17.4	21.2
-14	0.4	2.5	2.5	22.2	20.4	13.6	18.9	22.9
-12	1.1	3.4	3.4	23.8	22.0	14.9	20.5	24.5
-10	1.9	4.3	4.3	25.5	23.6	16.3	22.1	26.3
-8	2.8	5.2	5.2	27.2	25.3	17.8	23.7	28.0
-6	3.6	6.1	6.2	29.0	27.0	19.3	25.4	29.9
-4	4.6	7.1	7.2	30.9	28.8	20.8	27.2	31.8
-2	5.5	8.1	8.3	32.8	30.7	22.5	29.1	33.8
0	6.5	9.2	9.4	34.8	32.6	24.1	30.9	35.8
2	7.5	10.3	10.5	36.8	34.6	25.9	32.9	37.9
4	8.5	11.4	11.7	38.9	36.6	27.7	34.9	40.1
6	9.6	12.6	12.9	41.1	38.7	29.5	37.0	42.3
8	10.8	13.8	14.2	43.4	40.9	31.4	39.1	44.6
10	11.9	15.1	15.5	45.7	43.1	33.4	41.4	46.9
12	13.1	16.4	16.8	48.0	45.4	35.4	43.6	49.4
14	14.4	17.7	18.3	50.5	47.8	37.6	46.0	51.9
16	15.7	19.1	19.7	53.0	50.2	39.7	48.4	54.5
18	17.0	20.6	21.2	55.6	52.7	42.0	50.9	57.1
20	18.4	22.0	22.8	58.2	55.3	44.3	53.5	59.8
22	19.9	23.6	24.4	61.0	58.0	46.7	56.1	62.6
24	21.3	25.1	26.0	63.8	60.7	49.1	58.8	65.5
26	22.9	26.8	27.7	66.7	63.5	51.7	61.6	68.5
28	24.5	28.4	29.5	69.6	66.4	54.3	64.5	71.5
30	26.1	30.2	31.3	72.7	69.3	56.9	67.5	74.7
32	27.8	32.0	33.2	75.8	72.4	59.7	70.5	77.9
34	29.5	33.8	35.1	79.0	75.5	62.6	73.6	81.2
36	31.3	35.7	37.1	82.3	78.7	65.5	76.8	84.6
38	33.1	37.6	39.2	85.7	82.0	68.5	80.1	88.0
40	35.0	39.6	41.3	89.2	85.4	71.6	83.5	91.6
42	37.0	41.7	43.5	92.7	88.8	74.8	87.0	95.3
44	39.0	43.8	45.7	96.4	92.4	78.0	90.5	99.0
46	41.1	46.0	48.0	100.1	96.0	81.4	94.2	102.9
48	43.2	48.2	50.4	104.0	99.8	84.8	97.9	106.8

°F	Freon™ 134a (R-134a)	Opteon™ XP10 (R-513A)	Freon™ M049 *Plus* (R-437A)	Freon™ 507 (R-507A)	Freon™ 404A (R-404A)	Opteon™ XP40 (R-449A)	Freon™ M079 (R-422A)	Freon™ HP80 (R-402A)
50	45.4	50.5	52.8	107.9	103.6	88.4	101.8	110.9
52	**47.7**	**52.9**	**61.6**	**112.0**	**109.2**	**110.8**	**111.3**	**119.6**
54	**50.0**	**55.3**	**64.3**	**116.2**	**113.3**	**115.0**	**115.4**	**123.9**
56	**52.4**	**57.8**	**67.1**	**120.4**	**117.4**	**119.2**	**119.7**	**128.3**
58	**54.9**	**60.4**	**69.9**	**124.7**	**121.7**	**123.5**	**124.0**	**132.8**
60	**57.4**	**63.0**	**72.9**	**129.2**	**126.0**	**128.0**	**128.4**	**137.4**
62	**60.0**	**65.7**	**75.9**	**133.7**	**130.5**	**132.5**	**132.9**	**142.1**
64	**62.7**	**68.5**	**78.9**	**138.4**	**135.0**	**137.2**	**137.5**	**147.0**
66	**65.4**	**71.3**	**82.1**	**143.1**	**139.7**	**142.0**	**142.3**	**151.9**
68	**68.2**	**74.2**	**85.3**	**148.0**	**144.4**	**146.8**	**147.1**	**157.0**
70	**71.1**	**77.2**	**88.6**	**153.0**	**149.3**	**151.8**	**152.1**	**162.1**
72	**74.1**	**80.2**	**92.0**	**158.1**	**154.3**	**156.9**	**157.2**	**167.4**
74	**77.1**	**83.4**	**95.5**	**163.3**	**159.4**	**162.2**	**162.3**	**172.8**
76	**80.2**	**86.6**	**99.1**	**168.6**	**164.6**	**167.5**	**167.6**	**178.3**
78	**83.4**	**89.9**	**102.7**	**174.1**	**169.9**	**172.9**	**173.0**	**183.9**
80	**86.7**	**93.2**	**106.5**	**179.6**	**175.4**	**178.5**	**178.6**	**189.7**
82	**90.0**	**96.7**	**110.3**	**185.3**	**181.0**	**184.2**	**184.2**	**195.5**
84	**93.5**	**100.2**	**114.2**	**191.1**	**186.7**	**190.0**	**190.0**	**201.5**
86	**97.0**	**103.8**	**118.2**	**197.1**	**192.5**	**195.9**	**195.9**	**207.7**
88	**100.6**	**107.5**	**122.3**	**203.1**	**198.4**	**202.0**	**201.9**	**213.9**
90	**104.3**	**111.3**	**126.5**	**209.3**	**204.5**	**208.2**	**208.1**	**220.3**
92	**108.1**	**115.2**	**130.8**	**215.6**	**210.7**	**214.5**	**214.4**	**226.8**
94	**112.0**	**119.1**	**135.2**	**222.1**	**217.0**	**221.0**	**220.8**	**233.4**
96	**115.9**	**123.2**	**139.7**	**228.7**	**223.4**	**227.6**	**227.3**	**240.2**
98	**120.0**	**127.3**	**144.2**	**235.4**	**230.0**	**234.3**	**234.0**	**247.1**
100	**124.2**	**131.5**	**148.9**	**242.3**	**236.8**	**241.1**	**240.9**	**254.2**
102	**128.4**	**135.9**	**153.7**	**249.3**	**243.6**	**248.1**	**247.8**	**261.4**
104	**132.7**	**140.3**	**158.6**	**256.5**	**250.6**	**255.3**	**254.9**	**268.7**
106	**137.2**	**144.8**	**163.6**	**263.8**	**257.8**	**262.5**	**262.2**	**276.2**
108	**141.7**	**149.4**	**168.7**	**271.2**	**265.1**	**270.0**	**269.6**	**283.8**
110	**146.4**	**154.1**	**173.9**	**278.8**	**272.5**	**277.5**	**277.1**	**291.6**
112	**151.1**	**159.0**	**179.2**	**286.6**	**280.1**	**285.2**	**284.8**	**299.6**
114	**156.0**	**163.9**	**184.7**	**294.5**	**287.9**	**293.1**	**292.6**	**307.6**
116	**160.9**	**168.9**	**190.2**	**302.6**	**295.8**	**301.1**	**300.6**	**315.9**
118	**166.0**	**174.0**	**195.9**	**310.8**	**303.8**	**309.3**	**308.8**	**324.3**
120	**171.2**	**179.3**	**201.7**	**319.2**	**312.0**	**317.6**	**317.1**	**332.8**
122	**176.4**	**184.6**	**207.5**	**327.8**	**320.4**	**326.0**	**325.6**	**341.6**
124	**181.8**	**190.0**	**213.6**	**336.5**	**329.0**	**334.7**	**334.2**	**350.5**
126	**187.4**	**195.6**	**219.7**	**345.4**	**337.7**	**343.5**	**343.0**	**359.5**
128	**193.0**	**201.3**	**226.0**	**354.5**	**346.6**	**352.4**	**352.0**	**368.7**
130	**198.7**	**207.1**	**232.3**	**363.8**	**355.6**	**361.5**	**361.2**	**378.1**
132	**204.6**	**213.0**	**238.9**	**373.2**	**364.9**	**370.8**	**370.5**	**387.7**
134	**210.6**	**219.0**	**245.5**	**382.9**	**374.3**	**380.2**	**380.0**	**397.5**
136	**216.7**	**225.1**	**252.3**	**392.7**	**383.9**	**389.9**	**389.7**	**407.4**
138	**222.9**	**231.4**	**259.2**	**402.7**	**393.7**	**399.7**	**399.6**	**417.5**
140	**229.2**	**237.8**	**266.2**	**413.0**	**403.7**	**409.6**	**409.7**	**427.8**
142	**235.7**	**244.3**	**273.4**	**423.4**	**413.9**	**419.7**	**420.0**	**438.3**
144	**242.3**	**250.9**	**280.7**	**434.1**	**424.3**	**430.1**	**430.5**	**449.0**
146	**249.0**	**257.7**	**288.1**	**444.9**	**434.9**	**440.6**	**441.2**	**459.9**
148	**255.9**	**264.6**	**295.7**	**456.1**	**445.7**	**451.2**	**452.1**	**471.0**
150	**262.9**	**271.6**	**303.4**	**467.4**	**456.8**	**462.1**	**463.2**	**482.3**

Properties calculated using REFPROP Ver 9.1, Std Ref Data Program, NIST 2013.
Modifications were made to REFPROP when interaction parameters were not available.

For a complete list of P-T Charts, please refer to the PT Calculator App available for download from Android™ and Apple™ devices.

GENERAL REPLACEMENT GUIDE

R-458A

When Do You Use Bluon TdX 20?

The Only Complete R-22 Replacement Solution



Annual Maintenance
The conversion process also doubles as a comprehensive system tune up, leveraging the maintenance budget set aside by your customers.



System Leak | Refrigerant Loss
If the system has a leak, re-charging with R-22 is expensive and many times against code and Federal Regulations. Upgrade the system with Bluon TdX 20 instead.



Compressor Failure | Re-build
With an already evacuated system due to a compressor failure, converting to Bluon TdX 20 is very cost effective for your customers.



System Repairs Requiring Evacuation
Changing an expansion valve? Cleaning coils? Performing an oil change? With an already evacuated system, converting to Bluon TdX 20 is very cost effective.



Pro-active Energy Efficiency Measure
Converting a system to Bluon TdX 20 creates large savings in energy consumption. Typical energy savings of 10% - 20% and ROI's of 2- 3 years expected.



Pro-active Removal of R-22
Many building owners, asset managers and end-users want R-22 removed from their systems for environmental and operating expense purposes.



Bluon Accreditation Program - Tier II
Tier II prepares contractors to install TdX 20 in systems overs 20 tons. Bluon experts will train mechanical contractors on site for the first three conversions.

RECOMMENDED LINE SIZES

R404A, R507, R407A/C/F, R448A, R449A

Table 2. Weight of Refrigerants in Copper Lines During Operation (Pounds per 100 lineal feet of type "L" tubing)

Line Size O.D. (Inches)	Refrigerant	Liquid Line	Hot Gas Line	Suction Line at Suction Temperature				
				-40˚F	-20˚F	0˚F	+20˚F	+40˚F
3/8	R-407A, R-407C, R-407F	3.8	0.25	0.02	0.03	0.04	0.06	0.09
	R-448A, R-449A	3.6	0.24	0.02	0.03	0.04	0.06	0.09
	R-404A, R-507A	3.4	0.27	0.02	0.04	0.06	0.08	0.12
1/2	R-407A, R-407C, R-407F	7.0	0.46	0.03	0.05	0.07	0.11	0.16
	R-448A, R-449A	6.7	0.44	0.03	0.05	0.07	0.11	0.16
	R-404A, R-507A	6.3	0.51	0.04	0.07	0.11	0.15	0.22
5/8	R-407A, R-407C, R-407F	11.2	0.74	0.05	0.08	0.12	0.18	0.26
	R-448A, R-449A	10.8	0.71	0.05	0.08	0.12	0.18	0.26
	R-404A, R-507A	10.2	0.82	0.07	0.11	0.17	0.25	0.35
7/8	R-407A, R-407C, R-407F	23.3	1.54	0.10	0.16	0.25	0.37	0.55
	R-448A, R-449A	22.3	1.47	0.10	0.16	0.25	0.37	0.54
	R-404A, R-507A	21.1	1.70	0.15	0.23	0.35	0.51	0.74
1-1/8	R-407A, R-407C, R-407F	39.7	2.62	0.16	0.27	0.42	0.64	0.93
	R-448A, R-449A	38.1	2.51	0.17	0.27	0.42	0.64	0.92
	R-404A, R-507A	36.1	2.89	0.25	0.39	0.60	0.88	1.25
1-3/8	R-407A, R-407C, R-407F	60.5	4.00	0.25	0.41	0.64	0.97	1.42
	R-448A, R-449A	58.0	3.83	0.26	0.42	0.65	0.97	1.41
	R-404A, R-507A	54.9	4.41	0.38	0.60	0.91	1.34	1.91
1-5/8	R-407A, R-407C, R-407F	85.7	5.66	0.35	0.58	0.91	1.37	2.01
	R-448A, R-449A	82.1	5.42	0.36	0.59	0.92	1.37	1.99
	R-404A, R-507A	77.7	6.24	0.54	0.85	1.29	1.89	2.71
2-1/8	R-407A, R-407C, R-407F	149	9.84	0.61	1.01	1.58	2.39	3.50
	R-448A, R-449A	143	9.43	0.63	1.02	1.58	2.39	3.47
	R-404A, R-507A	135	10.85	0.94	1.48	2.24	3.29	4.71
2-5/8	R-407A, R-407C, R-407F	230	15.18	0.95	1.55	2.44	3.68	5.39
	R-448A, R-449A	220	14.54	0.97	1.58	2.46	3.68	5.35
	R-404A, R-507A	209	16.73	1.45	2.28	3.45	5.07	7.26
3-1/8	R-407A, R-407C, R-407F	328	21.66	0.35	2.22	3.48	5.26	7.69
	R-448A, R-449A	314	20.76	1.39	2.25	3.50	5.25	7.64
	R-404A, R-507A	298	23.88	2.06	3.25	4.93	7.24	10.36
3-5/8	R-407A, R-407C, R-407F	444	29.30	1.83	3.00	4.71	7.11	10.41
	R-448A, R-449A	425	28.07	1.87	3.05	4.74	7.10	10.33
	R-404A, R-507A	403	32.30	2.79	4.40	6.67	9.79	14.01
4-1/8	R-407A, R-407C, R-407F	577	38.08	2.37	3.90	6.12	9.24	13.53
	R-448A, R-449A	552	36.49	2.44	3.96	6.16	9.23	13.42
	R-404A, R-507A	523	41.99	3.63	5.72	8.67	12.72	18.21

Table 3. Pressure Loss of Liquid Refrigerants in Liquid Line Risers (Expressed in Pressure Drop, PSIG, and Subcooling Loss, ˚F)

Refrigerant	Liquid Line Rise in Feet																	
	10'		15'		20'		25'		30'		40'		50'		75'		100'	
	PSIG	˚F	PSIG	˚F	PSIG	˚F	PSIG	˚F	PSIG	˚F	PSIG	˚F	PSIG	˚F	PSIG	˚F	PSIG	˚F
R-407A, R-407C, R-407F	4.3	1.4	6.4	2.0	8.5	2.7	10.6	3.4	12.8	4.1	17.0	5.4	21.3	6.8	31.9	10.1	42.5	13.5
R-448A, R-449A	4.3	1.1	6.5	1.7	8.7	2.3	10.9	2.8	13.0	3.4	17.4	4.5	21.7	5.6	32.6	8.3	43.5	10.9
R-507, R-404A	4.1	1.1	6.1	1.6	8.2	2.1	10.2	2.7	12.2	3.3	16.3	4.1	20.4	5.6	30.6	8.3	40.8	11.8

Based on 110˚F liquid temperature at bottom of riser.

Table 4. Equivalent Feet of Pipe Due to Valve and Fitting Friction

Copper Tube, O.D., Type "L"	1/2	5/8	7/8	1-1/8	1-3/8	1-5/8	2-1/8	2-5/8	3-1/8	3-5/8	4-1/8	5-1/8	6-1/8
Globe Valve (Open)	14	16	22	28	36	42	57	69	83	99	118	138	168
Angle Valve (Open)	7	9	12	15	18	21	28	34	42	49	57	70	83
90˚ Turn Through Tee	3	4	5	6	8	9	12	14	17	20	22	28	34
Tee (Straight Through) or Sweep Below	.75	1	1.5	2	2.5	3	3.5	4	5	6	7	9	11
90˚ Elbow or Reducing Tee (Straight Through)	1	2	2	3	4	4	5	7	8	10	12	14	16

* When determining the refrigerant line length, be sure to add an allowance for fittings. See Table 4. Total equivalent length of refrigerant lines is the sum of the actual linear footage and the allowance for fittings.

RECOMMENDED LINE SIZES

R404A, R507, R407A/C/F, R448A, R449A

Table 5. Recommended Remote Condenser Line Sizes

Net Evaporator Capacity	Total Equiv. Length	R-407A/C/F, R-448A & R-449A		R-507 & R-404A	
		Discharge Line (O.D.)	Liquid Line Cond. to Receiver (O.D.)	Discharge Line (O.D.)	Liquid Line Cond. to Receiver (O.D.)
3,000	50	3/8	3/8	3/8	3/8
	100	3/8	3/8	3/8	3/8
6,000	50	3/8	3/8	1/2	3/8
	100	1/2	3/8	1/2	3/8
9,000	50	1/2	3/8	1/2	3/8
	100	1/2	3/8	1/2	3/8
12,000	50	1/2	3/8	1/2	3/8
	100	5/8	3/8	5/8	1/2
18,000	50	5/8	3/8	5/8	1/2
	100	5/8	3/8	7/8	1/2
24,000	50	5/8	3/8	5/8	1/2
	100	7/8	1/2	7/8	5/8
36,000	50	7/8	1/2	7/8	5/8
	100	7/8	5/8	7/8	7/8
48,000	50	7/8	5/8	7/8	5/8
	100	7/8	7/8	1-1/8	7/8
60,000	50	7/8	5/8	7/8	7/8
	100	1-1/8	7/8	1-1/8	7/8
72,000	50	7/8	7/8	1-1/8	7/8
	100	1-1/8	7/8	1-1/8	1-1/8
90,000	50	1-1/8	7/8	1-1/8	7/8
	100	1-1/8	7/8	1-1/8	1-1/8
120,000	50	1-1/8	7/8	1-1/8	1-1/8
	100	1-3/8	1-1/8	1-3/8	1-3/8
180,000	50	1-3/8	1-1/8	1-3/8	1-3/8
	100	1-5/8	1-3/8	1-5/8	1-5/8
240,000	50	1-3/8	1-3/8	1-5/8	1-3/8
	100	1-5/8	1-3/8	2-1/8	1-5/8
300,000	50	1-5/8	1-3/8	1-5/8	1-5/8
	100	2-1/8	1-5/8	2-1/8	2-1/8
360,000	50	1-5/8	1-5/8	2-1/8	1-5/8
	100	2-1/8	2-1/8	2-1/8	2-1/8
480,000	50	2-1/8	1-5/8	2-1/8	2-1/8
	100	2-1/8	2-1/8	2-1/8	2-5/8
600,000	50	2-1/8	2-1/8	2-1/8	2-1/8
	100	2-5/8	2-5/8	2-5/8	2-5/8
720,000	50	2-1/8	2-1/8	2-1/8	2-5/8
	100	2-5/8	2-5/8	2-5/8	3-1/8
840,000	50	2-1/8	2-1/8	2-5/8	2-5/8
	100	2-5/8	2-5/8	2-5/8	3-1/8
960,000	50	2-5/8	2-5/8	2-5/8	2-5/8
	100	2-5/8	3-1/8	3-1/8	3-5/8
1,080,000	50	2-5/8	2-5/8	2-5/8	3-1/8
	100	3-1/8	3-1/8	3-1/8	3-5/8
1,200,000	50	2-5/8	2-5/8	2-5/8	3-1/8
	100	3-1/8	3-1/8	3-5/8	4-1/8
1,440,000	50	2-5/8	3-1/8	3-1/8	3-5/8
	100	3-1/8	3-5/8	3-5/8	4-1/8
1,680,000	50	3-1/8	3-1/8	3-1/8	3-5/8
	100	3-5/8	3-5/8	3-5/8	4-1/8

RECOMMENDED LINE SIZES

R404A, R507

Table 6. Recommended Line Sizes for R-404A, R-507*

Capacity BTUH	Suction Line Size												Maximum Suction Line Riser Size						
	Suction Temperature												R-404A /507 Suction Temperature						
	+40˚F Equivalent Lengths				+20˚F Equivalent Lengths				+10˚F Equivalent Lengths										
	25'	50'	100'	150'	25'	50'	100'	150'	25'	50'	100'	150'	+40	+20	+10	-10	-20	-30	-40
1,000	3/8	3/8	3/8	3/8	3/8	3/8	3/8	3/8	3/8	3/8	3/8	3/8	3/8	3/8	3/8	3/8	1/2	1/2	1/2
3,000	3/8	3/8	1/2	1/2	3/8	3/8	1/2	1/2	3/8	1/2	1/2	5/8	3/8	3/8	1/2	1/2	1/2	1/2	1/2
4,000	3/8	1/2	1/2	1/2	3/8	1/2	1/2	5/8	1/2	1/2	5/8	5/8	3/8	1/2	1/2	1/2	5/8	5/8	5/8
6,000	1/2	1/2	1/2	5/8	1/2	1/2	5/8	7/8	1/2	1/2	5/8	7/8	1/2	1/2	1/2	1/2	5/8	5/8	7/8
9,000	1/2	5/8	5/8	5/8	5/8	5/8	7/8	7/8	5/8	5/8	7/8	7/8	1/2	5/8	5/8	7/8	7/8	7/8	7/8
12,000	1/2	5/8	7/8	7/8	5/8	7/8	7/8	7/8	5/8	7/8	7/8	7/8	1/2	7/8	7/8	7/8	7/8	1-1/8	1-1/8
15,000	5/8	5/8	7/8	7/8	5/8	7/8	7/8	7/8	7/8	7/8	7/8	1-1/8	5/8	7/8	7/8	7/8	7/8	1-1/8	1-1/8
18,000	5/8	7/8	7/8	7/8	7/8	7/8	7/8	1-1/8	7/8	7/8	1-1/8	1-1/8	5/8	7/8	7/8	1-1/8	1-1/8	1-1/8	1-1/8
24,000	5/8	7/8	7/8	7/8	7/8	7/8	1-1/8	1-1/8	7/8	1-1/8	1-1/8	1-1/8	5/8	1-1/8	1-1/8	1-1/8	1-1/8	1-3/8	1-3/8
30,000	7/8	7/8	7/8	1-1/8	7/8	7/8	1-1/8	1-1/8	7/8	1-1/8	1-1/8	1-3/8	7/8	1-1/8	1-1/8	1-1/8	1-1/8	1-3/8	1-3/8
36,000	7/8	7/8	1-1/8	1-1/8	7/8	1-1/8	1-1/8	1-3/8	1-1/8	1-1/8	1-3/8	1-3/8	7/8	1-1/8	1-1/8	1-1/8	1-1/8	1-3/8	1-3/8
42,000	7/8	7/8	1-1/8	1-1/8	1-1/8	1-1/8	1-3/8	1-3/8	1-1/8	1-1/8	1-3/8	1-3/8	7/8	1-3/8	1-3/8	1-3/8	1-3/8	1-5/8	1-5/8
48,000	7/8	1-1/8	1-1/8	1-1/8	1-1/8	1-1/8	1-3/8	1-3/8	1-1/8	1-1/8	1-3/8	1-5/8	7/8	1-3/8	1-3/8	1-3/8	1-3/8	1-5/8	1-5/8
54,000	7/8	1-1/8	1-1/8	1-3/8	1-1/8	1-1/8	1-3/8	1-3/8	1-1/8	1-3/8	1-3/8	1-5/8	1-1/8	1-3/8	1-3/8	1-3/8	1-3/8	1-5/8	1-5/8
60,000	7/8	1-1/8	1-1/8	1-3/8	1-1/8	1-1/8	1-3/8	1-5/8	1-1/8	1-3/8	1-5/8	1-5/8	1-1/8	1-5/8	1-5/8	1-5/8	1-5/8	1-5/8	1-5/8
66,000	1-1/8	1-1/8	1-3/8	1-3/8	1-1/8	1-3/8	1-3/8	1-5/8	1-1/8	1-3/8	1-5/8	1-5/8	1-1/8	1-5/8	1-5/8	1-5/8	1-5/8	1-5/8	1-5/8
72,000	1-1/8	1-1/8	1-3/8	1-3/8	1-1/8	1-3/8	1-5/8	1-5/8	1-1/8	1-3/8	1-5/8	1-5/8	1-1/8	1-5/8	1-5/8	1-5/8	1-5/8	1-5/8	1-5/8
78,000	1-1/8	1-1/8	1-3/8	1-3/8	1-1/8	1-3/8	1-5/8	1-5/8	1-3/8	1-3/8	1-5/8	1-5/8	1-1/8	1-5/8	1-5/8	1-5/8	1-5/8	1-5/8	1-5/8
84,000	1-1/8	1-1/8	1-3/8	1-3/8	1-1/8	1-3/8	1-5/8	1-5/8	1-3/8	1-3/8	1-5/8	2-1/8	1-3/8	1-5/8	1-5/8	1-5/8	1-5/8	2-1/8	1-5/8
90,000	1-1/8	1-3/8	1-3/8	1-5/8	1-3/8	1-3/8	1-5/8	2-1/8	1-3/8	1-5/8	1-5/8	2-1/8	1-3/8	1-5/8	1-5/8	1-5/8	2-1/8	2-1/8	2-1/8
120,000	1-1/8	1-3/8	1-5/8	1-5/8	1-3/8	1-5/8	2-1/8	2-1/8	1-3/8	1-5/8	2-1/8	2-1/8	1-5/8	2-1/8	2-1/8	2-1/8	2-1/8	2-1/8	2-1/8
150,000	1-3/8	1-3/8	1-5/8	2-1/8	1-5/8	1-5/8	2-1/8	2-1/8	1-5/8	2-1/8	2-1/8	2-1/8	1-5/8	2-1/8	2-1/8	2-1/8	2-1/8	2-1/8	2-5/8
180,000	1-3/8	1-5/8	2-1/8	2-1/8	1-5/8	2-1/8	2-1/8	2-1/8	1-5/8	2-1/8	2-1/8	2-5/8	1-5/8	2-1/8	2-1/8	2-5/8	2-5/8	2-5/8	2-5/8
210,000	1-3/8	1-5/8	2-1/8	2-1/8	1-5/8	2-1/8	2-1/8	2-5/8	2-1/8	2-1/8	2-5/8	2-5/8	2-1/8	2-5/8	2-5/8	2-5/8	2-5/8	2-5/8	3-1/8
240,000	1-5/8	1-5/8	2-1/8	2-1/8	1-5/8	2-1/8	2-1/8	2-5/8	2-1/8	2-1/8	2-5/8	2-5/8	2-1/8	2-5/8	2-5/8	2-5/8	2-5/8	3-1/8	3-1/8
300,000	1-5/8	2-1/8	2-1/8	2-5/8	2-1/8	2-1/8	2-5/8	2-5/8	2-1/8	2-5/8	2-5/8	3-1/8	2-1/8	2-5/8	2-5/8	2-5/8	2-5/8	3-5/8	3-5/8
360,000	2-1/8	2-1/8	2-5/8	2-5/8	2-1/8	2-1/8	2-5/8	3-1/8	2-1/8	2-5/8	2-5/8	3-1/8	2-5/8	2-5/8	3-1/8	3-5/8	3-5/8	3-5/8	4-1/8
480,000	2-1/8	2-1/8	2-5/8	2-5/8	2-1/8	2-5/8	3-1/8	3-1/8	2-5/8	2-5/8	2-5/8	3-5/8	2-5/8	3-1/8	3-5/8	3-5/8	3-5/8	3-5/8	4-1/8
600,000	2-1/8	2-5/8	2-5/8	3-1/8	2-5/8	2-5/8	3-1/8	3-5/8	2-5/8	2-5/8	3-1/8	3-5/8	3-1/8	3-5/8	3-5/8	3-5/8	3-5/8	4-1/8	4-1/8

*** NOTES:**

1. Sizes that are highlighted indicate maximum suction line sizes that should be used for risers. Riser size should not exceed horizontal size. Properly placed suction traps must also be used for adequate oil return. All sizes shown are for O.D. Type L copper tubing.
2. Suction line sizes selected at pressure drop equivalent to 2˚F. Reduce estimate of system capacity accordingly.
3. Recommended liquid line size may increase with reverse cycle hot gas systems.
4. If system load drops below 40% of design, consideration to installing double suction risers should be made.

RECOMMENDED LINE SIZES

R404A, R507

Table 6a. Recommended Line Sizes for R-404A, R-507* (cont.)

Capacity BTUH	Suction Line Size																Liquid Line Size			
	Suction Temperature																Receiver to Expansion Valve Equivalent Lengths			
	-10 ˚F Equivalent Lengths				-20˚F Equivalent Lengths				-30˚F Equivalent Lengths				-40˚F Equivalent Lengths							
	25'	50'	100'	150'	25'	50'	100'	150'	25'	50'	100'	150'	25'	50'	100'	150'	25'	50'	100'	150'
1,000	3/8	3/8	1/2	1/2	3/8	3/8	1/2	1/2	3/8	3/8	1/2	1/2	3/8	1/2	1/2	5/8	3/8	3/8	3/8	3/8
3,000	1/2	1/2	5/8	5/8	1/2	1/2	5/8	7/8	1/2	1/2	5/8	7/8	1/2	1/2	5/8	7/8	3/8	3/8	3/8	3/8
4,000	1/2	5/8	5/8	7/8	1/2	5/8	7/8	7/8	5/8	5/8	7/8	7/8	1/2	5/8	7/8	7/8	3/8	3/8	3/8	3/8
6,000	1/2	5/8	7/8	7/8	5/8	5/8	7/8	7/8	5/8	5/8	7/8	7/8	5/8	5/8	7/8	7/8	3/8	3/8	3/8	3/8
9,000	5/8	7/8	7/8	7/8	5/8	7/8	7/8	1-1/8	5/8	7/8	7/8	1-1/8	5/8	7/8	7/8	1-1/8	3/8	3/8	3/8	3/8
12,000	7/8	7/8	7/8	1-1/8	7/8	7/8	1-1/8	1-1/8	7/8	7/8	1-1/8	1-1/8	7/8	7/8	1-1/8	1-1/8	3/8	3/8	3/8	3/8
15,000	7/8	7/8	1-1/8	1-1/8	7/8	7/8	1-1/8	1-1/8	7/8	7/8	1-1/8	1-1/8	7/8	7/8	1-1/8	1-1/8	3/8	3/8	3/8	1/2
18,000	7/8	7/8	1-1/8	1-1/8	7/8	1-1/8	1-1/8	1-3/8	7/8	1-1/8	1-1/8	1-3/8	7/8	1-1/8	1-1/8	1-3/8	3/8	3/8	1/2	1/2
24,000	7/8	1-1/8	1-1/8	1-3/8	1-1/8	1-1/8	1-3/8	1-3/8	1-1/8	1-1/8	1-3/8	1-3/8	1-1/8	1-1/8	1-3/8	1-3/8	3/8	3/8	1/2	1/2
30,000	1-1/8	1-1/8	1-3/8	1-3/8	1-1/8	1-1/8	1-3/8	1-3/8	1-1/8	1-1/8	1-3/8	1-3/8	1-1/8	1-1/8	1-3/8	1-3/8	3/8	1/2	1/2	1/2
36,000	1-1/8	1-1/8	1-3/8	1-3/8	1-1/8	1-1/8	1-3/8	1-3/8	1-1/8	1-3/8	1-3/8	1-3/8	1-1/8	1-3/8	1-3/8	1-5/8	1/2	1/2	1/2	1/2
42,000	1-1/8	1-3/8	1-3/8	1-5/8	1-1/8	1-3/8	1-5/8	1-5/8	1-1/8	1-3/8	1-3/8	1-5/8	1-1/8	1-3/8	1-3/8	1-5/8	1/2	1/2	1/2	5/8
48,000	1-1/8	1-3/8	1-3/8	1-5/8	1-1/8	1-3/8	1-5/8	1-5/8	1-1/8	1-3/8	1-3/8	1-5/8	1-1/8	1-3/8	1-3/8	1-5/8	1/2	1/2	5/8	5/8
54,000	1-3/8	1-3/8	1-5/8	1-5/8	1-3/8	1-3/8	1-5/8	1-5/8	1-3/8	1-3/8	1-5/8	1-5/8	1-3/8	1-3/8	1-5/8	1-5/8	1/2	1/2	5/8	5/8
60,000	1-3/8	1-3/8	1-5/8	1-5/8	1-3/8	1-3/8	1-5/8	1-5/8	1-3/8	1-3/8	1-5/8	1-5/8	1-3/8	1-3/8	1-5/8	1-5/8	1/2	1/2	5/8	5/8
66,000	1-3/8	1-5/8	1-5/8	1-5/8	1-3/8	1-5/8	1-5/8	1-5/8	1-3/8	1-5/8	1-5/8	1-5/8	1-3/8	1-5/8	1-5/8	1-5/8	1/2	1/2	5/8	5/8
72,000	1-3/8	1-5/8	1-5/8	1-5/8	1-3/8	1-5/8	1-5/8	1-5/8	1-3/8	1-5/8	1-5/8	1-5/8	1-3/8	1-5/8	1-5/8	1-5/8	1/2	5/8	5/8	5/8
78,000	1-3/8	1-5/8	1-5/8	1-5/8	1-5/8	1-5/8	1-5/8	2-1/8	1-5/8	1-5/8	1-5/8	2-1/8	1-5/8	1-5/8	1-5/8	2-1/8	5/8	5/8	5/8	5/8
84,000	1-3/8	1-5/8	1-5/8	2-1/8	1-5/8	1-5/8	2-1/8	2-1/8	1-5/8	1-5/8	2-1/8	2-1/8	1-5/8	1-5/8	2-1/8	2-1/8	5/8	5/8	5/8	7/8
90,000	1-5/8	1-5/8	2-1/8	2-1/8	1-5/8	1-5/8	2-1/8	2-1/8	1-5/8	2-1/8	2-1/8	2-1/8	1-5/8	1-5/8	2-1/8	2-1/8	5/8	5/8	7/8	7/8
120,000	1-5/8	2-1/8	2-1/8	2-5/8	1-5/8	2-1/8	2-1/8	2-5/8	1-5/8	2-1/8	2-1/8	2-5/8	1-5/8	2-1/8	2-1/8	2-5/8	5/8	5/8	7/8	7/8
150,000	2-1/8	2-1/8	2-5/8	2-5/8	2-1/8	2-1/8	2-5/8	2-5/8	2-1/8	2-1/8	2-5/8	2-5/8	2-1/8	2-1/8	2-5/8	2-5/8	5/8	7/8	7/8	7/8
180,000	2-1/8	2-1/8	2-5/8	2-5/8	2-1/8	2-1/8	2-5/8	2-5/8	2-1/8	2-1/8	2-5/8	2-5/8	2-1/8	2-1/8	2-5/8	2-5/8	7/8	7/8	7/8	1-1/8
210,000	2-1/8	2-1/8	2-5/8	3-1/8	2-1/8	2-5/8	2-5/8	3-1/8	2-1/8	2-5/8	2-5/8	3-1/8	2-1/8	2-5/8	2-5/8	3-1/8	7/8	7/8	1-1/8	1-1/8
240,000	2-1/8	2-5/8	2-5/8	3-1/8	2-1/8	2-5/8	2-5/8	3-1/8	2-5/8	2-5/8	3-1/8	3-1/8	2-5/8	2-5/8	3-1/8	3-1/8	7/8	7/8	1-1/8	1-1/8
300,000	2-5/8	2-5/8	3-1/8	3-1/8	2-5/8	2-5/8	3-1/8	3-5/8	2-5/8	2-5/8	3-1/8	3-5/8	2-5/8	2-5/8	3-5/8	3-5/8	7/8	1-1/8	1-1/8	1-3/8
360,000	2-5/8	2-5/8	3-1/8	3-5/8	2-5/8	2-5/8	3-5/8	3-5/8	2-5/8	3-1/8	3-5/8	3-5/8	2-5/8	3-1/8	3-5/8	4-1/8	1-1/8	1-1/8	1-3/8	1-3/8
480,000	2-5/8	3-1/8	3-5/8	3-5/8	2-5/8	3-1/8	3-5/8	3-5/8	3-1/8	3-5/8	4-1/8	4-1/8	3-1/8	3-5/8	4-1/8	4-1/8	1-1/8	1-1/8	1-3/8	1-5/8
600,000	3-1/8	3-1/8	3-5/8	4-1/8	3-1/8	3-1/8	3-5/8	3-5/8	3-1/8	3-5/8	4-1/8	4-1/8	3-1/8	3-5/8	4-1/8	4-1/8	1-1/8	1-3/8	1-5/8	1-5/8

*** NOTES:**

1. Sizes that are highlighted indicate maximum suction line sizes that should be used for risers. Riser size should not exceed horizontal size. Properly placed suction traps must also be used for adequate oil return. All sizes shown are for O.D. Type L copper tubing.
2. Suction line sizes selected at pressure drop equivalent to 2˚F. Reduce estimate of system capacity accordingly.
3. Recommended liquid line size may increase with reverse cycle hot gas systems.
4. If system load drops below 40% of design, consideration to installing double suction risers should be made.

RECOMMENDED LINE SIZES

R-407A/C/F

Table 7. Recommended Line Sizes for R-407A/R-407C/R-407F*

Capacity BTUH	Suction Line Size												Maximum Suction Line Riser Size						
	Suction Temperature												R-407A/C/F Suction Temperature						
	+40˚F Equivalent Lengths				+20˚F Equivalent Lengths				+10˚F Equivalent Lengths										
	25'	50'	100'	150'	25'	50'	100'	150'	25'	50'	100'	150'	+40	+20	+10	-10	-20	-30	-40
1,000	3/8	3/8	3/8	3/8	3/8	3/8	3/8	3/8	3/8	3/8	3/8	3/8	3/8	3/8	3/8	3/8	3/8	3/8	3/8
3,000	3/8	3/8	3/8	1/2	3/8	3/8	1/2	1/2	1/2	1/2	1/2	5/8	3/8	3/8	1/2	1/2	1/2	5/8	5/8
4,000	3/8	3/8	1/2	1/2	3/8	1/2	1/2	5/8	1/2	5/8	5/8	5/8	1/2	1/2	1/2	1/2	5/8	5/8	5/8
6,000	3/8	1/2	1/2	5/8	1/2	1/2	5/8	5/8	1/2	5/8	7/8	7/8	1/2	1/2	1/2	5/8	5/8	7/8	7/8
9,000	1/2	1/2	5/8	5/8	1/2	5/8	7/8	7/8	5/8	7/8	7/8	7/8	5/8	5/8	5/8	5/8	7/8	7/8	1-1/8
12,000	1/2	5/8	7/8	7/8	5/8	5/8	7/8	7/8	5/8	7/8	7/8	7/8	5/8	7/8	5/8	7/8	7/8	1-1/8	1-3/8
15,000	5/8	5/8	7/8	7/8	5/8	7/8	7/8	7/8	7/8	7/8	7/8	1-1/8	7/8	7/8	7/8	7/8	1-1/8	1-3/8	1-3/8
18,000	5/8	7/8	7/8	7/8	5/8	7/8	7/8	7/8	7/8	7/8	1-1/8	1-1/8	7/8	7/8	7/8	1-1/8	1-1/8	1-3/8	1-5/8
24,000	5/8	7/8	7/8	7/8	7/8	7/8	7/8	1-1/8	7/8	1-1/8	1-1/8	1-1/8	7/8	1-1/8	7/8	1-1/8	1-3/8	1-5/8	1-5/8
30,000	7/8	7/8	7/8	1-1/8	7/8	7/8	1-1/8	1-1/8	7/8	1-1/8	1-1/8	1-3/8	7/8	1-1/8	1-1/8	1-3/8	1-5/8	1-5/8	2-1/8
36,000	7/8	7/8	1-1/8	1-1/8	7/8	7/8	1-1/8	1-1/8	1-1/8	1-1/8	1-3/8	1-3/8	1-1/8	1-1/8	1-1/8	1-5/8	1-5/8	1-5/8	2-1/8
42,000	7/8	7/8	1-1/8	1-1/8	7/8	7/8	1-1/8	1-1/8	1-1/8	1-3/8	1-3/8	1-3/8	1-1/8	1-1/8	1-3/8	1-5/8	1-5/8	2-1/8	2-1/8
48,000	7/8	7/8	1-1/8	1-1/8	7/8	1-1/8	1-1/8	1-3/8	1-1/8	1-3/8	1-3/8	1-5/8	1-1/8	1-3/8	1-3/8	1-5/8	1-5/8	2-1/8	2-5/8
54,000	7/8	1-1/8	1-1/8	1-1/8	7/8	1-1/8	1-1/8	1-3/8	1-1/8	1-3/8	1-3/8	1-5/8	1-1/8	1-3/8	1-3/8	1-5/8	2-1/8	2-1/8	2-5/8
60,000	7/8	1-1/8	1-1/8	1-3/8	1-1/8	1-1/8	1-3/8	1-3/8	1-1/8	1-3/8	1-5/8	1-5/8	1-3/8	1-3/8	1-5/8	1-5/8	2-1/8	2-5/8	2-5/8
66,000	7/8	1-1/8	1-1/8	1-3/8	1-1/8	1-1/8	1-3/8	1-3/8	1-1/8	1-5/8	1-5/8	1-5/8	1-3/8	1-3/8	1-5/8	2-1/8	2-1/8	2-5/8	3-1/8
72,000	7/8	1-1/8	1-1/8	1-3/8	1-1/8	1-1/8	1-3/8	1-3/8	1-3/8	1-5/8	1-5/8	2-1/8	1-3/8	1-3/8	1-5/8	2-1/8	2-1/8	2-5/8	3-1/8
78,000	7/8	1-1/8	1-3/8	1-3/8	1-1/8	1-1/8	1-3/8	1-3/8	1-3/8	1-5/8	1-5/8	2-1/8	1-3/8	1-3/8	1-5/8	2-1/8	2-5/8	2-5/8	3-1/8
84,000	1-1/8	1-1/8	1-3/8	1-3/8	1-1/8	1-1/8	1-3/8	1-5/8	1-3/8	1-5/8	1-5/8	2-1/8	1-3/8	1-5/8	1-5/8	2-1/8	2-5/8	3-1/8	3-1/8
90,000	1-1/8	1-3/8	1-3/8	1-3/8	1-1/8	1-3/8	1-5/8	1-5/8	1-3/8	1-5/8	2-1/8	2-1/8	1-3/8	1-5/8	1-5/8	2-1/8	2-5/8	3-1/8	3-1/8
120,000	1-1/8	1-3/8	1-5/8	1-5/8	1-1/8	1-3/8	1-5/8	1-5/8	1-5/8	2-1/8	2-1/8	2-1/8	1-5/8	1-5/8	1-5/8	2-5/8	3-1/8	3-1/8	3-5/8
150,000	1-3/8	1-3/8	1-5/8	1-5/8	1-3/8	1-5/8	1-5/8	2-1/8	1-5/8	2-1/8	2-1/8	2-5/8	1-5/8	2-1/8	2-5/8	3-1/8	3-1/8	3-5/8	4-1/8
180,000	1-3/8	1-3/8	1-5/8	2-1/8	1-3/8	1-5/8	2-1/8	2-1/8	1-5/8	2-1/8	2-1/8	2-5/8	2-1/8	2-1/8	2-5/8	3-1/8	3-5/8	3-5/8	4-1/8
210,000	1-3/8	1-5/8	2-1/8	2-1/8	1-5/8	1-5/8	2-1/8	2-1/8	2-1/8	2-1/8	2-5/8	2-5/8	2-1/8	2-1/8	2-5/8	3-5/8	3-5/8	4-1/8	5-1/8
240,000	1-5/8	1-5/8	2-1/8	2-1/8	1-5/8	2-1/8	2-1/8	2-1/8	2-1/8	2-5/8	2-5/8	2-5/8	2-1/8	2-1/8	3-1/8	3-5/8	3-5/8	4-1/8	5-1/8
300,000	1-5/8	2-1/8	2-1/8	2-1/8	1-5/8	2-1/8	2-1/8	2-5/8	2-1/8	2-5/8	2-5/8	3-1/8	2-1/8	2-5/8	3-1/8	3-5/8	4-1/8	5-1/8	5-1/8
360,000	1-5/8	2-1/8	2-1/8	2-5/8	2-1/8	2-1/8	2-5/8	2-5/8	2-1/8	2-5/8	3-1/8	3-1/8	2-5/8	2-5/8	3-5/8	4-1/8	5-1/8	5-1/8	5-1/8
480,000	2-1/8	2-1/8	2-5/8	2-5/8	2-1/8	2-5/8	2-5/8	3-1/8	2-5/8	3-1/8	3-1/8	3-5/8	2-5/8	3-1/8	3-5/8	5-1/8	5-1/8	6-1/8	6-1/8
600,000	2-1/8	2-5/8	2-5/8	3-1/8	2-5/8	2-5/8	3-1/8	3-1/8	2-5/8	3-1/8	3-5/8	3-5/8	3-1/8	3-1/8	4-1/8	5-1/8	5-1/8	6-1/8	8-1/8

*** NOTES:**

1. Sizes that are highlighted indicate maximum suction line sizes that should be used for risers. Riser size should not exceed horizontal size. Properly placed suction traps must also be used for adequate oil return. All sizes shown are for O.D. Type L copper tubing.
2. Suction line sizes selected at pressure drop equivalent to 2˚F. Reduce estimate of system capacity accordingly.
3. Recommended liquid line size may increase with reverse cycle hot gas systems.
4. If system load drops below 40% of design, consideration to installing double suction risers should be made.

RECOMMENDED LINE SIZES

R-407A/C/F

Table 7a. Recommended Line Sizes for R-407A/R-407C/R-407F* (cont.)

Capacity BTUH	Suction Line Size																Liquid Line Size			
	Suction Temperature																Receiver to Expansion Valve Equivalent Lengths			
	-10˚F Equivalent Lengths				-20˚F Equivalent Lengths				-30˚F Equivalent Lengths				-40˚F Equivalent Lengths							
	25'	50'	100'	150'	25'	50'	100'	150'	25'	50'	100'	150'	25'	50'	100'	150'	25'	50'	100'	150'
1,000	3/8	3/8	1/2	1/2	3/8	1/2	1/2	1/2	3/8	1/2	1/2	5/8	3/8	5/8	5/8	5/8	3/8	3/8	3/8	3/8
3,000	1/2	1/2	5/8	5/8	1/2	5/8	7/8	7/8	5/8	5/8	7/8	7/8	5/8	5/8	7/8	7/8	3/8	3/8	3/8	3/8
4,000	1/2	5/8	7/8	7/8	5/8	7/8	7/8	7/8	5/8	7/8	7/8	7/8	5/8	7/8	7/8	1-1/8	3/8	3/8	3/8	3/8
6,000	5/8	5/8	7/8	7/8	5/8	5/8	7/8	1-1/8	7/8	7/8	1-1/8	1 1/8	7/8	7/8	1-1/8	1-1/8	3/8	3/8	3/8	3/8
9,000	5/8	7/8	7/8	1-1/8	7/8	7/8	1-1/8	1-1/8	7/8	1-1/8	1-1/8	1-3/8	1-1/8	1-1/8	1-3/8	1-3/8	3/8	3/8	3/8	3/8
12,000	7/8	7/8	1-1/8	1-1/8	7/8	1-1/8	1-1/8	1-3/8	1-1/8	1-1/8	1-3/8	1-3/8	1-1/8	1-1/8	1-3/8	1-5/8	3/8	3/8	3/8	3/8
15,000	7/8	1-1/8	1-1/8	1-1/8	7/8	1-1/8	1-3/8	1-3/8	1-1/8	1-1/8	1-3/8	1-3/8	1-1/8	1-3/8	1-5/8	1-5/8	3/8	3/8	3/8	3/8
18,000	7/8	1-1/8	1-1/8	1-3/8	1-1/8	1-1/8	1-3/8	1-3/8	1-1/8	1-3/8	1-3/8	1-5/8	1-1/8	1-3/8	1-5/8	1-5/8	3/8	3/8	3/8	1/2
24,000	1-1/8	1-1/8	1-3/8	1-3/8	1-1/8	1-3/8	1-3/8	1-5/8	1-3/8	1-3/8	1-5/8	1-5/8	1-3/8	1-5/8	2-1/8	2-1/8	3/8	3/8	1/2	1/2
30,000	1-1/8	1-1/8	1-3/8	1-5/8	1-1/8	1-3/8	1-5/8	1-5/8	1-3/8	1-5/8	1-5/8	2-1/8	1-3/8	1-5/8	2-1/8	2-1/8	3/8	1/2	1/2	1/2
36,000	1-1/8	1-3/8	1-3/8	1-5/8	1-3/8	1-3/8	1-5/8	2-1/8	1-3/8	1-5/8	2-1/8	2-1/8	1-5/8	2-1/8	2-1/8	2-1/8	3/8	1/2	1/2	5/8
42,000	1-3/8	1-3/8	1- 5/8	2-1/8	1-3/8	1-5/8	2-1/8	2-1/8	1-5/8	1-5/8	2-1/8	2-1/8	1-5/8	2-1/8	2-1/8	2-5/8	3/8	1/2	1/2	5/8
48,000	1-3/8	1-5/8	1-5/8	2-1/8	1-3/8	1-5/8	2-1/8	2-1/8	1-5/8	2-1/8	2-1/8	2-1/8	1-5/8	2-1/8	2-1/8	2-5/8	1/2	1/2	5/8	5/8
54,000	1-3/8	1-5/8	2-1/8	2-1/8	1-3/8	1- 5/8	2-1/8	2-1/8	1-5/8	2-1/8	2-1/8	2-5/8	2-1/8	2-1/8	2-5/8	2-5/8	1/2	1/2	5/8	5/8
60,000	1-3/8	1-5/8	2-1/8	2-1/8	1-5/8	2-1/8	2-1/8	2-1/8	1-5/8	2-1/8	2-1/8	2-5/8	2-1/8	2-1/8	2-5/8	2-5/8	1/2	1/2	5/8	5/8
66,000	1-3/8	1- 5/8	2-1/8	2-1/8	1-5/8	2-1/8	2-1/8	2-1/8	2-1/8	2-1/8	2-5/8	2-5/8	2-1/8	2-1/8	2-5/8	2-5/8	1/2	1/2	5/8	5/8
72,000	1- 5/8	1- 5/8	2-1/8	2-1/8	1-5/8	2-1/8	2-1/8	2-5/8	2-1/8	2-1/8	2-5/8	2-5/8	2-1/8	2-5/8	2-5/8	3-1/8	1/2	5/8	5/8	5/8
78,000	1- 5/8	2-1/8	2-1/8	2-1/8	1-5/8	2-1/8	2-1/8	2-5/8	2-1/8	2-1/8	2-5/8	2-5/8	2-1/8	2-5/8	2-5/8	3-1/8	1/2	5/8	5/8	7/8
84,000	1-5/8	2-1/8	2-1/8	2-1/8	1-5/8	2-1/8	2-1/8	2-5/8	2-1/8	2-1/8	2-5/8	2-5/8	2-1/8	2-5/8	2-5/8	3-1/8	1/2	5/8	5/8	7/8
90,000	1-5/8	2-1/8	2-1/8	2-5/8	2-1/8	2-1/8	2-5/8	2-5/8	2-1/8	2-1/8	2-5/8	2-5/8	2-1/8	2-5/8	3-1/8	3-1/8	1/2	5/8	7/8	7/8
120,000	2-1/8	2-1/8	2-5/8	2-5/8	2-1/8	2-1/8	2-5/8	3-1/8	2-1/8	2-5/8	3-1/8	3-1/8	2-5/8	2-5/8	3-1/8	3-5/8	5/8	5/8	7/8	7/8
150,000	2-1/8	2-1/8	2-5/8	2-5/8	2-5/8	2-5/8	3-1/8	3-1/8	2-5/8	2-5/8	3-1/8	3-5/8	2-5/8	3-1/8	3-5/8	3-5/8	5/8	7/8	7/8	7/8
180,000	2-1/8	2-5/8	2-5/8	3-1/8	2-5/8	2-5/8	3-1/8	3-1/8	2-5/8	3-1/8	3-1/8	3-5/8	2-5/8	3-1/8	3-5/8	4-1/8	7/8	7/8	7/8	1-1/8
210,000	2-1/8	2-5/8	3-1/8	3-1/8	2-5/8	2-5/8	3-1/8	3-5/8	2-5/8	3-1/8	3-5/8	3-5/8	3-1/8	3-5/8	4-1/8	4-1/8	7/8	7/8	7/8	1-1/8
240,000	2-5/8	2-5/8	3-1/8	3-1/8	2-5/8	3-1/8	3-5/8	3-5/8	2-5/8	3-1/8	3-5/8	4-1/8	3-1/8	3-5/8	4-1/8	5-1/8	7/8	7/8	1-1/8	1-1/8
300,000	2-5/8	3-1/8	3-1/8	3-5/8	2-5/8	3-1/8	3-5/8	4-1/8	3-1/8	3-5/8	4-1/8	4-1/8	3-5/8	3-5/8	5-1/8	5-1/8	7/8	7/8	1-1/8	1-1/8
360,000	2-5/8	3-1/8	3-5/8	3-5/8	3-1/8	3-5/8	4-1/8	4-1/8	3-1/8	3-5/8	4-1/8	5-1/8	3-5/8	4-1/8	5-1/8	5-1/8	7/8	1-1/8	1-1/8	1-1/8
480,000	3-1/8	3-5/8	4-1/8	4-1/8	3-1/8	3-5/8	4-1/8	5-1/8	3-5/8	4-1/8	5-1/8	5-1/8	4-1/8	5-1/8	5-1/8	6-1/8	7/8	1-1/8	1-3/8	1-3/8
600,000	3-1/8	3-5/8	4 -1/8	5-1/8	3-5/8	4-1/8	5-1/8	5-1/8	4-1/8	5-1/8	5-1/8	6-1/8	4-1/8	5-1/8	6-1/8	6-1/8	1-1/8	1-1/8	1-3/8	1-3/8

*** NOTES:**

1. Sizes that are highlighted indicate maximum suction line sizes that should be used for risers. Riser size should not exceed horizontal size. Properly placed suction traps must also be used for adequate oil return. All sizes shown are for O.D. Type L copper tubing.
2. Suction line sizes selected at pressure drop equivalent to 2˚F. Reduce estimate of system capacity accordingly.
3. Recommended liquid line size may increase with reverse cycle hot gas systems.
4. If system load drops below 40% of design, consideration to installing double suction risers should be made.

RECOMMENDED LINE SIZES

R-448A, R449A

Table 8. Recommended Line Sizes for R-448A/R-449A*

Capacity BTUH	Suction Line Size												Maximum Suction Line Riser Size						
	Suction Temperature												R-448A/R-449A Suction Temperature						
	+40˚F Equivalent Lengths				+20˚F Equivalent Lengths				+10˚F Equivalent Lengths										
	25'	50'	100'	150'	25'	50'	100'	150'	25'	50'	100'	150'	+40	+20	+10	-10	-20	-30	-40
1,000	3/8	3/8	3/8	3/8	3/8	3/8	3/8	3/8	3/8	3/8	3/8	3/8	3/8	3/8	3/8	3/8	3/8	1/2	1/2
3,000	3/8	3/8	1/2	1/2	3/8	3/8	1/2	1/2	3/8	1/2	1/2	5/8	3/8	3/8	1/2	1/2	1/2	1/2	5/8
4,000	3/8	1/2	1/2	1/2	3/8	1/2	1/2	5/8	1/2	1/2	5/8	5/8	3/8	1/2	1/2	1/2	5/8	5/8	5/8
6,000	1/2	1/2	1/2	5/8	1/2	1/2	5/8	7/8	1/2	1/2	5/8	7/8	1/2	1/2	1/2	1/2	5/8	5/8	7/8
9,000	1/2	5/8	5/8	5/8	5/8	5/8	7/8	7/8	5/8	5/8	7/8	7/8	1/2	5/8	5/8	7/8	7/8	7/8	7/8
12,000	1/2	5/8	5/8	7/8	5/8	7/8	7/8	7/8	5/8	7/8	7/8	7/8	1/2	7/8	7/8	7/8	7/8	1-1/8	1-1/8
15,000	5/8	5/8	7/8	7/8	5/8	7/8	7/8	7/8	7/8	7/8	7/8	1-1/8	5/8	7/8	7/8	7/8	7/8	1-1/8	1-1/8
18,000	5/8	7/8	7/8	7/8	7/8	7/8	7/8	1-1/8	7/8	7/8	1-1/8	1-1/8	5/8	7/8	7/8	1-1/8	1-1/8	1-1/8	1-1/8
24,000	5/8	7/8	7/8	7/8	7/8	7/8	1-1/8	1-1/8	7/8	1-1/8	1-1/8	1-1/8	5/8	1-1/8	1-1/8	1-1/8	1-1/8	1-3/8	1-3/8
30,000	5/8	7/8	7/8	1-1/8	7/8	7/8	1-1/8	1-1/8	7/8	1-1/8	1-1/8	1-3/8	7/8	1-1/8	1-1/8	1-1/8	1-1/8	1-3/8	1-3/8
36,000	7/8	7/8	1-1/8	1-1/8	7/8	1-1/8	1-1/8	1-3/8	1-1/8	1-1/8	1-3/8	1-3/8	7/8	1-1/8	1-1/8	1-1/8	1-1/8	1-3/8	1-3/8
42,000	7/8	7/8	1-1/8	1-1/8	1-1/8	1-1/8	1-3/8	1-3/8	1-1/8	1-1/8	1-3/8	1-3/8	7/8	1-3/8	1-3/8	1-3/8	1-3/8	1-5/8	1-5/8
48,000	7/8	1-1/8	1-1/8	1-1/8	1-1/8	1-1/8	1-3/8	1-3/8	1-1/8	1-1/8	1-3/8	1-5/8	7/8	1-3/8	1-3/8	1-3/8	1-3/8	1-5/8	1-5/8
54,000	7/8	1-1/8	1-1/8	1-3/8	1-1/8	1-1/8	1-3/8	1-3/8	1-1/8	1-3/8	1-3/8	1-5/8	1-1/8	1-3/8	1-3/8	1-3/8	1-3/8	1-5/8	1-5/8
60,000	7/8	1-1/8	1-1/8	1-3/8	1-1/8	1-1/8	1-3/8	1-5/8	1-1/8	1-3/8	1-5/8	1-5/8	1-1/8	1-5/8	1-5/8	1-5/8	1-5/8	1-5/8	1-5/8
66,000	1-1/8	1-1/8	1-3/8	1-3/8	1-1/8	1-3/8	1-3/8	1-5/8	1-1/8	1-3/8	1-5/8	1-5/8	1-1/8	1-5/8	1-5/8	1-5/8	1-5/8	1-5/8	1-5/8
72,000	1-1/8	1-1/8	1-3/8	1-3/8	1-1/8	1-3/8	1-5/8	1-5/8	1-1/8	1-3/8	1-5/8	1-5/8	1-1/8	1-5/8	1-5/8	1-5/8	1-5/8	1-5/8	1-5/8
78,000	1-1/8	1-1/8	1-3/8	1-3/8	1-1/8	1-3/8	1-5/8	1-5/8	1-3/8	1-3/8	1-5/8	1-5/8	1-3/8	1-5/8	1-5/8	1-5/8	1-5/8	2-1/8	2-1/8
84,000	1-1/8	1-1/8	1-3/8	1-3/8	1-1/8	1-3/8	1-5/8	1-5/8	1-3/8	1-3/8	1-5/8	2-1/8	1-3/8	1-5/8	1-5/8	1-5/8	1-5/8	2-1/8	2-1/8
90,000	1-1/8	1-3/8	1-3/8	1-5/8	1-3/8	1-3/8	1-5/8	2-1/8	1-3/8	1-5/8	1-5/8	2-1/8	1-3/8	1-5/8	1-5/8	1-5/8	2-1/8	2-1/8	2-1/8
120,000	1-1/8	1-3/8	1-5/8	1-5/8	1-3/8	1-5/8	2-1/8	2-1/8	1-3/8	1-5/8	2-1/8	2-1/8	1-5/8	2-1/8	2-1/8	2-1/8	2-1/8	2-5/8	2-5/8
150,000	1-3/8	1-3/8	1-5/8	2-1/8	1-5/8	1-5/8	2-1/8	2-1/8	1-5/8	2-1/8	2-1/8	2-1/8	1-5/8	2-1/8	2-1/8	2-1/8	2-1/8	2-5/8	2-5/8
180,000	1-3/8	1-5/8	2-1/8	2-1/8	1-5/8	2-1/8	2-1/8	2-1/8	1-5/8	2-1/8	2-1/8	2-5/8	1-5/8	2-1/8	2-1/8	2-5/8	2-5/8	2-5/8	2-5/8
210,000	1-3/8	1-5/8	2-1/8	2-1/8	1-5/8	2-1/8	2-1/8	2-5/8	2-1/8	2-1/8	2-5/8	2-5/8	2-1/8	2-5/8	2-5/8	2-5/8	2-5/8	3-1/8	3-1/8
240,000	1-5/8	1-5/8	2-1/8	2-1/8	1-5/8	2-1/8	2-1/8	2-5/8	2-1/8	2-1/8	2-5/8	2-5/8	2-1/8	2-5/8	2-5/8	2-5/8	2-5/8	3-1/8	3-1/8
300,000	1-5/8	2-1/8	2-1/8	2-5/8	2-1/8	2-1/8	2-5/8	2-5/8	2-1/8	2-5/8	2-5/8	3-1/8	2-5/8	2-5/8	2-5/8	2-5/8	2-5/8	3-1/8	3-1/8
360,000	2-1/8	2-1/8	2-5/8	2-5/8	2-1/8	2-1/8	2-5/8	3-1/8	2-1/8	2-5/8	2-5/8	3-1/8	2-5/8	2-5/8	3-1/8	3-1/8	3-1/8	3-5/8	3-5/8
480,000	2-1/8	2-1/8	2-5/8	2-5/8	2-1/8	2-5/8	3-1/8	3-1/8	2-5/8	2-5/8	2-5/8	3-5/8	3-1/8	3-1/8	3-5/8	3-5/8	3-5/8	4-1/8	4-1/8
600,000	2-1/8	2-5/8	2-5/8	3-1/8	2-5/8	2-5/8	3-1/8	3-5/8	2-5/8	2-5/8	3-1/8	3-5/8	3-1/8	3-5/8	3-5/8	3-5/8	3-5/8	4-1/8	4-1/8

*** NOTES:**

1. Sizes that are highlighted indicate maximum suction line sizes that should be used for risers. Riser size should not exceed horizontal size. Properly placed suction traps must also be used for adequate oil return. All sizes shown are for O.D. Type L copper tubing.
2. Suction line sizes selected at pressure drop equivalent to 2˚F. Reduce estimate of system capacity accordingly.
3. Recommended liquid line size may increase with reverse cycle hot gas systems.
4. If system load drops below 40% of design, consideration to installing double suction risers should be made.

RECOMMENDED LINE SIZES

R-448A, R449A

Table 8a. Recommended Line Sizes for R-448A/R-449A* (cont.)

Capacity BTUH	Suction Line Size																Liquid Line Size			
	Suction Temperature																Receiver to Expansion Valve Equivalent Lengths			
	-10˚F Equivalent Lengths				-20˚F Equivalent Lengths				-30˚F Equivalent Lengths				-40˚F Equivalent Lengths							
	25'	50'	100'	150'	25'	50'	100'	150'	25'	50'	100'	150'	25'	50'	100'	150'	25'	50'	100'	150'
1,000	3/8	3/8	1/2	1/2	3/8	3/8	1/2	1/2	3/8	3/8	1/2	1/2	3/8	1/2	1/2	5/8	3/8	3/8	3/8	3/8
3,000	1/2	1/2	5/8	5/8	1/2	1/2	5/8	7/8	1/2	1/2	5/8	7/8	1/2	1/2	5/8	7/8	3/8	3/8	3/8	3/8
4,000	1/2	5/8	5/8	7/8	1/2	5/8	7/8	7/8	5/8	5/8	7/8	7/8	1/2	5/8	7/8	7/8	3/8	3/8	3/8	3/8
6,000	1/2	5/8	7/8	7/8	5/8	5/8	7/8	7/8	5/8	5/8	7/8	7/8	5/8	5/8	7/8	7/8	3/8	3/8	3/8	3/8
9,000	5/8	7/8	7/8	7/8	5/8	7/8	7/8	1-1/8	5/8	7/8	7/8	1-1/8	5/8	7/8	7/8	1-1/8	3/8	3/8	3/8	3/8
12,000	7/8	7/8	7/8	1-1/8	7/8	7/8	1-1/8	1-1/8	7/8	7/8	1-1/8	1-1/8	7/8	7/8	1-1/8	1-1/8	3/8	3/8	3/8	3/8
15,000	7/8	7/8	1-1/8	1-1/8	7/8	7/8	1-1/8	1-1/8	7/8	7/8	1-1/8	1-1/8	7/8	7/8	1-1/8	1-1/8	3/8	3/8	3/8	3/8
18,000	7/8	7/8	1-1/8	1-1/8	7/8	1-1/8	1-1/8	1-3/8	7/8	1-1/8	1-1/8	1-3/8	7/8	1-1/8	1-1/8	1-3/8	3/8	3/8	3/8	1/2
24,000	7/8	1-1/8	1-1/8	1-3/8	1-1/8	1-1/8	1-3/8	1-3/8	1-1/8	1-1/8	1-3/8	1-3/8	1-1/8	1-1/8	1-3/8	1-3/8	3/8	3/8	1/2	1/2
30,000	1-1/8	1-1/8	1-3/8	1-3/8	1-1/8	1-1/8	1-3/8	1-3/8	1-1/8	1-1/8	1-3/8	1-3/8	1-1/8	1-1/8	1-3/8	1-3/8	3/8	3/8	1/2	1/2
36,000	1-1/8	1-1/8	1-3/8	1-3/8	1-1/8	1-1/8	1-3/8	1-3/8	1-1/8	1-3/8	1-3/8	1-3/8	1-1/8	1-3/8	1-3/8	1-5/8	3/8	1/2	1/2	1/2
42,000	1-1/8	1-3/8	1-3/8	1-5/8	1-1/8	1-3/8	1-5/8	1-5/8	1-1/8	1-3/8	1-3/8	1-5/8	1-1/8	1-3/8	1-3/8	1-5/8	3/8	1/2	1/2	1/2
48,000	1-1/8	1-3/8	1-3/8	1-5/8	1-1/8	1-3/8	1-5/8	1-5/8	1-1/8	1-3/8	1-3/8	1-5/8	1-1/8	1-3/8	1-3/8	1-5/8	1/2	1/2	1/2	1/2
54,000	1-3/8	1-3/8	1-5/8	1-5/8	1-3/8	1-3/8	1-5/8	1-5/8	1-3/8	1-3/8	1-5/8	1-5/8	1-3/8	1-3/8	1-5/8	1-5/8	1/2	1/2	1/2	5/8
60,000	1-3/8	1-3/8	1-5/8	1-5/8	1-3/8	1-3/8	1-5/8	1-5/8	1-3/8	1-3/8	1-5/8	1-5/8	1-3/8	1-3/8	1-5/8	1-5/8	1/2	1/2	5/8	5/8
66,000	1-3/8	1-5/8	1-5/8	1-5/8	1-3/8	1-5/8	1-5/8	1-5/8	1-3/8	1-5/8	1-5/8	1-5/8	1-3/8	1-5/8	1-5/8	1-5/8	1/2	1/2	5/8	5/8
72,000	1-3/8	1-5/8	1-5/8	1-5/8	1-3/8	1-5/8	1-5/8	1-5/8	1-3/8	1-5/8	1-5/8	1-5/8	1-3/8	1-5/8	1-5/8	1-5/8	1/2	1/2	5/8	5/8
78,000	1-3/8	1-5/8	1-5/8	1-5/8	1-5/8	1-5/8	1-5/8	2-1/8	1-5/8	1-5/8	1-5/8	2-1/8	1-5/8	1-5/8	1-5/8	2-1/8	1/2	1/2	5/8	5/8
84,000	1-3/8	1-5/8	1-5/8	2-1/8	1-5/8	1-5/8	2-1/8	2-1/8	1-5/8	1-5/8	2-1/8	2-1/8	1-5/8	1-5/8	2-1/8	2-1/8	1/2	5/8	5/8	5/8
90,000	1-5/8	1-5/8	2-1/8	2-1/8	1-5/8	1-5/8	2-1/8	2-1/8	1-5/8	2-1/8	2-1/8	2-1/8	1-5/8	1-5/8	2-1/8	2-1/8	1/2	5/8	5/8	7/8
120,000	1-5/8	2-1/8	2-1/8	2-5/8	1-5/8	2-1/8	2-1/8	2-5/8	1-5/8	2-1/8	2-1/8	2-5/8	1-5/8	2-1/8	2-1/8	2-5/8	5/8	5/8	7/8	7/8
150,000	2-1/8	2-1/8	2-5/8	2-5/8	2-1/8	2-1/8	2-5/8	2-5/8	2-1/8	2-1/8	2-5/8	2-5/8	2-1/8	2-1/8	2-5/8	2-5/8	5/8	7/8	7/8	7/8
180,000	2-1/8	2-1/8	2-5/8	2-5/8	2-1/8	2-1/8	2-5/8	2-5/8	2-1/8	2-1/8	2-5/8	2-5/8	2-1/8	2-1/8	2-5/8	2-5/8	5/8	7/8	7/8	7/8
210,000	2-1/8	2-1/8	2-5/8	3-1/8	2-1/8	2-5/8	2-5/8	3-1/8	2-1/8	2-5/8	2-5/8	3-1/8	2-1/8	2-5/8	2-5/8	3-1/8	7/8	7/8	7/8	7/8
240,000	2-1/8	2-5/8	2-5/8	3-1/8	2-1/8	2-5/8	2-5/8	3-1/8	2-5/8	2-5/8	3-1/8	3-1/8	2-5/8	2-5/8	3-1/8	3-1/8	7/8	7/8	7/8	1-1/8
300,000	2-5/8	2-5/8	3-1/8	3-1/8	2-5/8	2-5/8	3-1/8	3-5/8	2-5/8	2-5/8	3-1/8	3-5/8	2-5/8	2-5/8	3-5/8	3-5/8	7/8	7/8	1-1/8	1-1/8
360,000	2-5/8	2-5/8	3-1/8	3-5/8	2-5/8	2-5/8	3-5/8	3-5/8	2-5/8	3-1/8	3-5/8	3-5/8	2-5/8	3-1/8	3-5/8	4-1/8	7/8	7/8	1-1/8	1-1/8
480,000	2-5/8	3-1/8	3-5/8	3-5/8	2-5/8	3-1/8	3-5/8	3-5/8	3-1/8	3-5/8	4-1/8	4-1/8	3-1/8	3-5/8	4-1/8	4-1/8	1-1/8	1-1/8	1-1/8	1-3/8
600,000	3-1/8	3-1/8	3-5/8	4-1/8	3-1/8	3-1/8	3-5/8	3-5/8	3-1/8	3-5/8	4-1/8	4-1/8	3-1/8	3-5/8	4-1/8	4-1/8	1-1/8	1-1/8	1-1/8	1-3/8

*** NOTES:**

1. Sizes that are highlighted indicate maximum suction line sizes that should be used for risers. Riser size should not exceed horizontal size. Properly placed suction traps must also be used for adequate oil return. All sizes shown are for O.D. Type L copper tubing.
2. Suction line sizes selected at pressure drop equivalent to 2˚F. Reduce estimate of system capacity accordingly.
3. Recommended liquid line size may increase with reverse cycle hot gas systems.
4. If system load drops below 40% of design, consideration to installing double suction risers should be made.

Double Risers

A double riser gives the effect of a downsized riser at minimum load, while providing about the same pressure drop as a full sized line at full load. The smaller riser is sized to insure oil return at the minimum capacity step; the larger riser is sized so that the combined "flow areas" of both of these risers are approximately equal to the main suction or discharge line.

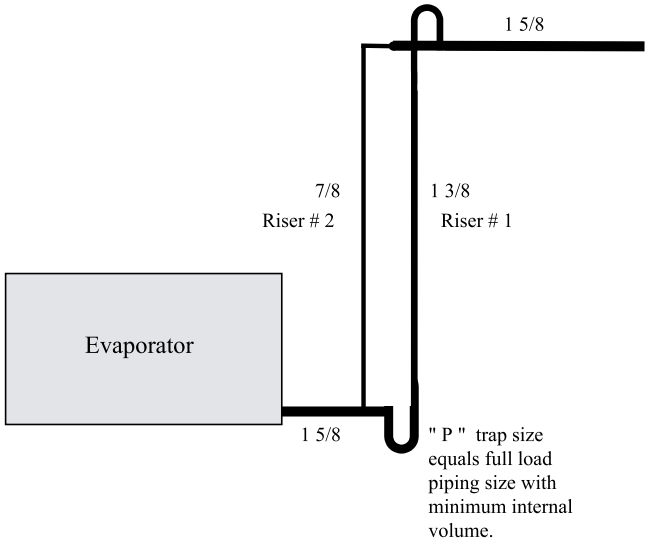

Full load capacity	
OD	area
7/8	(0.48)
1 1/8	(0.83)
1 3/8	(1.26)
1 5/8	(1.78)
2 1/8	(3.10)
2 5/8	(4.77)
3 1/8	(6.81)

Minimum capacity ≥ 33 %			
Riser #1		Riser #2	area
3/4	&	1/2	(0.49)
7/8	&	3/4	(0.83)
1 1/8	&	7/8	(1.31)
1 3/8	&	7/8	(1.74)
1 5/8	&	1 3/8	(3.04)
2 1/8	&	1 5/8	(4.88)
2 5/8	&	1 5/8	(6.55)

Notes:

* Systems that have capacity control between 33 % and 100 % of their rated capacity can maintain a minimum refrigerant velocity of 1500 fpm in vertical risers by using the above refrigerant double riser selection table.
* All tubing sizes stated are nominal outside diameter (OD), type "L" copper.
* Area refers to cross sectional tubing area expressed in square inches.
* Suggested maximum riser height is 20 ft. for refrigeration applications, 25 to 30 ft. increments for air conditioning applications. As the saturated suction temperature goes down, riser lengths also get shorter.

Double Riser Examples

Example # 1.

Refrigerant: R-404A or R-507
SST minus 20° F
SCT 100° F
Design load 7.5 tons
Minimum load … N/A
Piping runs:
evaporator to compressor = 50 ft
compressor to condenser = 30 ft
condenser to receiver = 30 ft
receiver to evaporator = 50 ft

Piping runs:

evaporator to compressor = 2 1/8
evaporator riser … N/A
compressor to condenser = 1 1/8
compressor riser … N/A
condenser to receiver = 3/4
receiver to evaporator = 5/8

Example # 2.

Refrigerant: R-134a
SST plus 35° F
SCT 100° F
Design load 5 tons
Minimum load 2/3 design
Piping runs:
evaporator to compressor = 50 ft
compressor to condenser = 30 ft
condenser to receiver = 30 ft
receiver to evaporator = 50 ft

Piping runs:

evaporator to compressor = 1 3/8
evaporator riser = 1 1/8 + 7/8
compressor to condenser = 7/8
compressor riser … N/A
condenser to receiver = 5/8
receiver to evaporator = 5/8

Example # 3.

Refrigerant: R-407C
SST plus 40° F
SCT 105° F
Design load 15 tons
Minimum load 50/50 of design
Piping runs: .. condenser located above
evaporator to compressor = 25 ft
compressor to condenser = 20 ft
condenser to receiver … no receiver
condenser to evaporator = 45 ft

Piping runs:

evaporator to compressor = 1 5/8
evaporator riser = 1 3/8 + 7/8
compressor to condenser = 1 1/8
compressor riser = 7/8 + 3/4
condenser to receiver … no receiver
receiver to evaporator = 3/4

Notes:
SST is Saturated Suction Temperature
SCT is Saturated Condensing Temperature
N/A is Not Applicable

Notes:
1 psi will support 1.8 ft typical refrigerant
1 psi will support 2.3 ft H_2O
1 psi will support 2.5 ft typical oil

PIPE SIZING AND SELECTION SOFTWARE

A better way to size pipe for the blend refrigerants

PARKER SPORLAN Virtual Engineer

Virtual Engineer sizing and selection tool for climate control and refrigeration application.





Parker

SPORLAN

CHEMOURS REFRIGERANT EXPERT (CRE)
Calculate Important Refrigerant Data On the Go



When you need to assess the system performance of the most commonly used fluorocarbon refrigerants available from The Chemours Company, you can download and use CRE.

Chemours™

https://www.opteon.com/en/support/helpful-resources/refrigerant-expert-tool

---

HONEYWELL
- GENETRON Refrigerants Modeling Software Download

https://www.honeywell-refrigerants.com/india/genetron-refrigerants-modeling-software-download/



Honeywell

Refrigerant Piping

Equivalent Lengths of Nonferrous Valves and Fittings

Equivalent Length is expressed in Feet of Pipe

Line Size OD	Globe / Solenoid Valve	Angle / Check Valve	90 º SR Elbow	90 º LR Elbow	45 º Elbow	Tee Line / Sight Glass	Tee Branch	Enlarging Coupling 1/4 (d → D)	Enlarging Coupling 1/2 (d → D)	Enlarging Coupling 3/4 (d → D)	Reducing Coupling 1/4 (D → d)	Reducing Coupling 1/2 (D → d)	Reducing Coupling 3/4 (D → d)
1/2	9	5	1.4	0.9	0.4	0.6	2.0	1.4	0.8	0.3	0.7	0.5	0.3
5/8	12	6	1.5	1.0	0.5	0.8	2.5	1.8	1.1	0.4	0.9	0.7	0.4
3/4	14	7	1.9	1.3	0.6	0.9	3.0	2.5	1.5	0.5	1.2	1.0	0.5
7/8	15	8	2.3	1.5	0.7	1.0	3.5	3.2	2.0	0.7	1.6	1.2	0.7
1 1/8	22	12	2.7	1.8	0.9	1.5	4.5	4.7	3.0	1.0	2.3	1.8	1.0
1 3/8	28	15	3.6	2.4	1.2	1.8	6.0	5.8	3.6	1.2	2.9	2.2	1.2
1 5/8	35	17	4.2	2.8	1.4	2.0	7.0	8.0	4.8	1.6	4.0	3.0	1.6
2 1/8	45	22	5.9	3.9	1.8	3.0	10.0	10	6.1	2.0	5.0	3.8	2.0
2 5/8	51	26	6.9	4.6	2.2	3.5	12.0	13	8.0	2.6	6.5	4.9	2.6
3 1/8	65	34	7.7	5.5	2.7	4.5	15.0	15	9.2	3.0	7.7	6.0	3.0
3 5/8	80	40	9.8	6.5	3.0	5.0	17.0	17	11	3.8	9.0	6.8	3.8

Muller Brass Co. Data

Carrier Engineering Manual number 3

Note: General accepted industry practice for determining the equivalent lengths for both P traps and U Bends is to add ***two*** 90° LR elbows of the specific OD tubing size for each component used.

Enter table for losses at smallest diameter "d"

Refrigerant Piping

Copper Tubing Specifications

Nominal (OD) Diameter	Type	Diameter OD In	Diameter ID In	Flow Area sq. In.	Weight Lb/Lin Ft.
3/8	K L	0.375 0.375	0.305 0.315	0.073 0.078	0.145 0.126
1/2	K L	0.500 0.500	0.402 0.430	0.127 0.145	0.269 0.198
5/8	K L	0.625 0.625	0.527 0.545	0.218 0.233	0.344 0.285
3/4	K L	0.750 0.750	0.652 0.666	0.334 0.348	0.418 0.362
7/8	K L	0.875 0.875	0.745 0.785	0.436 0.484	0.641 0.455
1 1/8	K L	1.125 1.125	0.995 1.025	0.778 0.825	0.839 0.655
1 3/8	K L	1.375 1.375	1.245 1.265	1.22 1.26	1.040 0.884
1 5/8	K L	1.625 1.625	1.481 1.505	1.72 1.78	1.36 1.14
2 1/8	K L	2.125 2.125	1.959 1.985	3.01 3.10	2.06 1.75
2 5/8	K L	2.625 2.625	2.435 2.465	4.66 4.77	2.93 2.48
3 1/8	K L	3.125 3.125	2.907 2.945	6.64 6.81	4.00 3.33
3 5/8	K L	3.625 3.625	3.385 3.425	9.00 9.21	5.12 4.29
4 1/8	K L	4.125 4.125	3.557 3.905	11.7 12.0	6.51 5.38

Based on ASTM B-88 standard

Maximum Spacing Between Pipe Supports for Copper Tubing

Nominal (OD) Diameter	Max. Span in Ft.
5/8	5
7/8	6
1 1/8	7
1 3/8	8
1 5/8	9
2 1/8	10
2 5/8	11
3 1/8	12
3 5/8	13
4 1/8	14

1967 ASHRAE Guide and Data Book

① Maximum allowable hanger distance as per CSA B52 code

Opteon™ Refrigerants

Weight of Refrigerant in Copper Tubing

Pounds per 100 feet of Type K & L Tubing

(Weight at 77°F / 25°C)

Tube O.D.[2]		Flow Area (in^2)	Cu ft / 100 ft	R-22		R-134a		R-404A[3]		R-407C		R-410A		R448A		R-449A		R-407A		R-454C		R-454A		R-454B		R-513A	
				74.33	2.76	75.33	2.02	65.18	4.07	71.01	2.73	66.08	4.12	68.49	3.05	68.49	3.08	71.49	3.11	65.08	2.78	63.73	3.00	61.65	3.17	70.81	2.35
				L[1]	V	L	V	L	V	L	V	L	V	L	V	L	V	L	V	L	V	L	V	L	V	L	V
1/2	K	0.127	0.088	6.56	0.24	6.6	0.18	5.7	0.36	6.3	0.24	5.8	0.36	6.0	0.27	6.0	0.27	6.3	0.27	5.7	0.24	5.6	0.26	5.4	0.28	6.2	0.21
	L	0.145	0.101	7.48	0.28	7.6	0.20	6.6	0.41	7.2	0.28	6.7	0.41	6.9	0.31	6.9	0.31	7.2	0.31	6.6	0.28	6.4	0.30	6.2	0.32	7.1	0.24
5/8	K	0.218	0.151	11.25	0.42	11.4	0.31	9.9	0.62	10.8	0.41	10.0	0.62	10.4	0.46	10.4	0.47	10.8	0.47	9.9	0.42	9.6	0.45	9.3	0.48	10.7	0.36
	L	0.233	0.162	12.03	0.45	12.2	0.33	10.5	0.66	11.5	0.44	10.7	0.67	11.1	0.49	11.1	0.50	11.6	0.50	10.5	0.45	10.3	0.49	10.0	0.51	11.5	0.38
3/4	K	0.334	0.232	17.24	0.64	17.5	0.47	15.1	0.95	16.5	0.63	15.3	0.96	15.9	0.71	15.9	0.71	16.6	0.72	15.1	0.64	14.8	0.70	14.3	0.73	16.4	0.54
	L	0.348	0.242	17.96	0.67	18.2	0.49	15.8	0.98	17.2	0.66	16.0	1.00	16.6	0.74	16.6	0.74	17.3	0.75	15.7	0.67	15.4	0.73	14.9	0.77	17.1	0.57
7/8	K	0.436	0.303	22.51	0.84	22.8	0.61	19.7	1.23	21.5	0.83	20.0	1.25	20.7	0.92	20.7	0.93	21.6	0.94	19.7	0.84	19.3	0.91	18.7	0.96	21.4	0.71
	L	0.484	0.336	24.98	0.93	25.3	0.68	21.9	1.37	23.9	0.92	22.2	1.38	23.0	1.03	23.0	1.03	24.0	1.04	21.9	0.93	21.4	1.01	20.7	1.06	23.8	0.79
1 1/8	K	0.778	0.540	40.16	1.49	40.7	1.09	35.2	2.20	38.4	1.48	35.7	2.23	37.0	1.65	37.0	1.66	38.6	1.68	35.2	1.50	34.4	1.62	33.3	1.71	38.3	1.27
	L	0.825	0.573	42.58	1.58	43.2	1.16	37.3	2.33	40.7	1.57	37.9	2.36	39.2	1.75	39.2	1.76	41.0	1.78	37.3	1.59	36.5	1.72	35.3	1.81	40.6	1.35
1 3/8	K	1.217	0.845	62.82	2.33	63.7	1.71	55.1	3.44	60.0	2.31	55.8	3.48	57.9	2.58	57.9	2.60	60.4	2.62	55.0	2.35	53.9	2.54	52.1	2.68	59.8	1.99
	L	1.257	0.873	64.88	2.41	65.8	1.76	56.9	3.56	62.0	2.39	57.7	3.60	59.8	2.66	59.8	2.69	62.4	2.71	56.8	2.42	55.6	2.62	53.8	2.76	61.8	2.05
1 5/8	K	1.723	1.197	88.94	3.30	90.1	2.42	78.0	4.88	85.0	3.27	79.1	4.93	82.0	3.65	81.9	3.68	85.5	3.72	77.9	3.32	76.3	3.59	73.8	3.79	84.7	2.81
	L	1.779	1.235	91.83	3.41	93.1	2.49	80.5	5.03	87.7	3.38	81.6	5.09	84.6	3.77	84.6	3.80	88.3	3.84	80.4	3.43	78.7	3.71	76.2	3.91	87.5	2.90
2 1/8	K	3.014	2.093	155.58	5.78	157.7	4.23	136.4	8.53	148.6	5.72	138.3	8.62	143.4	6.39	143.3	6.44	149.6	6.50	136.2	5.81	133.4	6.29	129.0	6.63	148.2	4.92
	L	3.095	2.149	159.76	5.93	161.9	4.34	140.1	8.76	152.6	5.87	142.0	8.85	147.2	6.56	147.2	6.62	153.6	6.68	139.9	5.96	137.0	6.46	132.5	6.81	152.2	5.05
2 5/8	K	4.657	3.234	240.39	8.93	243.6	6.53	210.8	13.18	229.7	8.84	213.7	13.32	221.5	9.87	221.5	9.96	231.2	10.04	210.5	8.97	206.1	9.71	199.4	10.24	229.0	7.60
	L	4.772	3.314	246.32	9.15	249.6	6.69	216.0	13.50	235.3	9.06	219.0	13.65	227.0	10.12	227.0	10.20	236.9	10.29	215.7	9.20	211.2	9.95	204.3	10.49	234.6	7.78
3 1/8	K	6.637	4.609	342.59	12.73	347.2	9.31	300.4	18.78	327.3	12.59	304.6	18.98	315.7	14.07	315.7	14.19	329.5	14.31	299.9	12.79	293.7	13.84	284.1	14.59	326.3	10.83
	L	6.812	4.731	351.62	13.06	356.4	9.55	308.3	19.28	335.9	12.93	312.6	19.48	324.0	14.44	324.0	14.57	338.2	14.69	307.9	13.13	301.5	14.21	291.6	14.98	334.9	11.11
3 5/8	K	8.999	6.249	464.51	17.26	470.8	12.62	407.3	25.47	443.8	17.08	413.0	25.74	428.0	19.08	428.0	19.24	446.7	19.41	406.7	17.34	398.3	18.77	385.3	19.79	442.5	14.68
	L	9.213	6.398	475.56	17.67	482.0	12.92	417.0	26.07	454.3	17.48	422.8	26.35	438.2	19.53	438.2	19.70	457.4	19.87	416.4	17.75	407.7	19.21	394.4	20.26	453.0	15.03
4 1/8	K	11.684	8.114	603.11	22.40	611.2	16.39	528.8	33.06	576.2	22.17	536.2	33.42	555.7	24.77	555.7	24.98	580.0	25.20	528.0	22.52	517.1	24.37	500.2	25.69	574.5	19.06
	L	11.977	8.317	618.23	22.97	626.6	16.80	542.1	33.89	590.6	22.73	549.6	34.26	569.7	25.39	569.6	25.61	594.6	25.83	541.3	23.08	530.1	24.98	512.7	26.34	588.9	19.54

NOTES: (1). L ... saturated liquid & density, V ... saturated vapour & density, (2). Copper Tubing as per ASTM -- B88, (3). for R-507 use R-404A values

©2023 The Chemours Company FC, LLC. Opteon™ and any associated logos are trademarks or copyrights of The Chemours Company FC, LLC. Chemours™ and the Chemours Logo are trademarks of The Chemours Company.

Chemours™

Heat Rejection Factors

Condenser Load = Compressor Capacity x Factor

If heat of rejection figures are not obtainable from the compressor manufacturer, the factors shown in the table below may be used to determine the Total Heat of Rejection (THR).

For systems outside the normal limits of single stage compressor applications, such as compound and cascade refrigeration systems, the following formulae may be used to arrive at the Total Heat of Rejection requirements for the selection of the condenser:

Open Compressors:
Total Heat of Rejection = Compressor Capacity (Btuh) + (2545 x BHP).

Suction cooled Hermetic Compressors:
Total Heat of Rejection = Compressor Capacity (Btuh) + (3413 x kW).

Evaporator Temperature		Condensing Temperature											
		90° F (32° C)		100° F (38° C)		110° F (43° C)		120° F (49° C)		130° F (55° C)		140° F (60° C)	
°F	°C	Open	Herm	Open	Herm	Open	Herm	Open	Herm	Open	Herm	Open	Herm
-30	-34	1.37	1.57	1.42	1.62	1.47	1.68	*	*	*	*	*	*
-20	-29	1.33	1.49	1.37	1.53	1.42	1.58	1.47	1.65	*	*	*	*
-10	-23	1.28	1.42	1.32	1.46	1.37	1.50	1.42	1.57	1.47	1.64	*	*
0	-18	1.24	1.36	1.28	1.40	1.32	1.44	1.37	1.50	1.41	1.56	1.47	1.62
10	-12	1.21	1.31	1.24	1.34	1.28	1.38	1.32	1.43	1.36	1.49	1.42	1.55
20	- 7	1.17	1.26	1.20	1.29	1.24	1.33	1.28	1.37	1.32	1.43	1.37	1.49
30	- 1	1.14	1.22	1.17	1.25	1.20	1.28	1.24	1.32	1.27	1.37	1.32	1.42
40	4	1.12	1.18	1.15	1.21	1.17	1.24	1.20	1.27	1.23	1.31	1.28	1.35
50	10	1.09	1.14	1.12	1.17	1.14	1.20	1.17	1.23	1.20	1.26	1.24	1.29

Notes:
* Outside normal limits of single stage compressor applications.
For two stage applications use formulae shown above.

Refrigerant Receivers

(R-22 capacities at 90º F and 90% full.)
Density of R-22 at 90º F is 72.71 lbs per cubic foot

Vertical Receivers

(R-22 capacity in lbs.)

Dia.	length	lbs.
3.5	x 7.5	= 2
3.5	x 10	= 3
4	x 10	= 4
5	x 10	= 6
5	x 20	= 13
6	x 12	= 10
6	x 18	= 16
6	x 24	= 22
6	x 30	= 28

Note: Dia. and Length are in inches

Horizontal Receivers

(R-22 capacity in lbs.)

Dia.	length	lbs.	Dia.	length	lbs.	Dia.	length	lbs.
5	x 28	= 18	9 3/4	x 22	= 51	14	x 72	= 363
						14	x 96	= 489
6	x 30	= 28	10 3/4	x 36	= 105			
6	x 36	= 34	10 3/4	x 48	= 142	16	x 60	= 388
			10 3/4	x 60	= 179	16	x 72	= 470
6 5/8	x 38	= 43	10 3/4	x 72	= 216	16	x 96	= 633
			10 3/4	x 96	= 290			
7 5/8	x 28	= 41				18	x 72	= 597
			12 3/4	x 48	= 196			
8 5/8	x 28	= 53	12 3/4	x 60	= 248	20	x 72	= 736
8 5/8	x 36	= 69	12 3/4	x 72	= 299	20	x 84	= 866
8 5/8	x 42	= 81	12 3/4	x 96	= 404	20	x 96	= 996
8 5/8	x 48	= 93						
8 5/8	x 60	= 117						

Note: Dia. and Length are in inches

For alternate refrigerant storage capacities in pounds for R-22 rated receivers multiply the rated capacity by the following conversion factors.

Example: A receiver that measures 12 3/4" x 72" has a R-22 rated capacity of 299 lbs.
What is its revised capacity if this receiver is used with R-407C ?
299 lbs x 0.9473 = 283 lbs.

R-22 ... 1.0000	R-401A ... 0.9927	R-404A ... 0.8682	R-410A ... 0.8794
R-123 ... 1.2405	R-401B ... 0.9920	R-407C ... 0.9473	R-507 ... 0.8674
R-124 ... 1.1425	R-402A ... 0.9293	R-408A ... 0.8853	
R-134a ... 1.0114	R-402B ... 0.9433	R-409A ... 1.0278	

Notes: Receivers capacities source .... Standard Refrigeration Company.
All dimensions are expressed in inches and all weights are expressed in pounds.
Densities sourced from E.I. DuPont Thermodynamic Tables,
R-507 ... AlliedSignal Inc., computer program,
R-408A and R-409A ... Elf Atochem, computer program.

Nu-Calgon Refrigeration Oil Cross-Reference

Company	Company Type	Brand Name	Product #	Oil Type	Viscosity SUS/ISO	Nu-Calgon Replacement	Nu-Calgon Product #			
							Quart	Gallon	5 Gallon	Drum
Atochem	Refrigerant	ACD	22W	POE	100/22	RL22H		4313-46		
Planet Elf			32W	POE	150/32	RL32H	4314-44	4314-46	4314-45	4314-41
			46W	POE	200/46	RL46H		4315-46		
			68W	POE	300/68	RL68H or RL68HP	4316-44	4316-46 4316-76	4316-45	4316-41
			100W	POE	500/100	RL100E		4317-66		
Bitzer	Compressor		BSE 32	POE	150/32	RL32H	4314-44	4314-46	4314-45	4314-41
			BSE 55	POE	300/68	RL68H	4316-44	4316-46	4316-45	4316-41
			BSE 170	POE	800/170	RL170H		4318-26	4318-25	
			BSE 220	POE	1100/220	RL220H+		4318-66	4318-65	
			G68	Mineral	150/32	C-3s		4303-07	4303-05	4303-01
			B100	Mineral	500/100	C-5s		4305-07		4305-01
			5.2	AB	150/32	Zerol 150		4310-07	4310-05	4310-01
			S68	AB	300/68	Zerol 300		4311-07	4311-05	4311-01
BVA	Oil		3	Mineral	150/32	C-3s		4303-07	4303-05	4303-01
			4	Mineral	300/68	C-4s		4304-07	4304-05	4304-01
			5	Mineral	500/100	C-5s		4305-07		4305-01
			100E	AB	500/100	Zerol 500			4312-05	
		AKYL.	150	AB	150/32	Zerol 150		4310-07	4310-05	4310-01
		AKYL.	200ca	AB	210/46	Zerol 200TD		4308-07	4308-05	4308-01
		AKYL.	300	AB	300/68	Zerol 300		4311-07	4311-05	4311-01
Calumet	Oil		RO15	Mineral	150/32	C-3s		4303-07	4303-05	4303-01
			RO30	Mineral	300/68	C-4s		4304-07	4304-05	4304-01
Carrier	Compressor		PP23BZ-102	POE	150/32	RL32H	4314-44	4314-46	4314-45	4314-41
			PP23BZ-103	POE	300/68	RL68H	4316-44	4316-46	4316-45	4316-41
			PP23BZ-104	POE	1100/220	RL220H+		4318-66	4318-65	
			PP23BZ-106	POE	150/32	RL32H	4314-44	4314-46	4314-45	4314-41
			PP23BZ-107	POE	300/68	RL68H	4316-44	4316-46	4316-45	4316-41
			PP47-10	POE	100/22	RL22H		4313-46		
			PP47-11	POE	150/32	RL32H	4314-44	4314-46	4314-45	4314-41
			PP47-12	POE	300/68	RL68H	4316-44	4316-46	4316-45	4316-41
			PP47-25	POE	150/32	RL32H	4314-44	4314-46	4314-45	4314-41
			PP47-26	POE	300/68	RL68H	4316-44	4316-46	4316-45	4316-41
			PP47-30	POE	150/32	RL32H	4314-44	4314-46	4314-45	4314-41
			PP47-31	POE	300/68	RL68HP		4316-76		
			PP47-32	POE	1100/220	RL220H+		4318-66	4318-65	
			PP47-33	POE	500/100	RL100E		4317-66		
			PP47-34	POE	1100/220	RL200XL			4318-75	
			PP23BZ-101	AB	400/86	Zerol 400CA			4311-65	
			PP47-8	AB	150/32	Zerol 150		4310-07	4310-05	4310-01
			PP49-7	AB	400/86	Zerol 400CA			4311-65	
			PP49-8	AB	300/68	Zerol 300		4311-07	4311-05	4311-01
Castrol	Oil	Icematic	SW20	POE	100/20	RL22H		4313-46		
			SW20C	POE	100/20	RL22H		4313-46		
			SW22	POE	100/20	RL22H		4313-46		
			SW22CC	POE	100/20	RL32-3MAF	4314-64	4314-66	4314-65	
			SW32	POE	150/32	RL32H	4314-44	4314-46	4314-45	4314-41
			SW32C	POE	150/32	RL32H	4314-44	4314-46	4314-45	4314-41
			SW46	POE	200/46	RL46H		4315-46		

Nu-Calgon Refrigeration Oil Cross-Reference

Company	Company Type	Brand Name	Product #	Oil Type	Viscosity SUS/ISO	Nu-Calgon Replacement	Nu-Calgon Product #			
							Quart	Gallon	5 Gallon	Drum
Castrol			SW68	POE	300/68	RL68H RL68HP	4316-44	4316-46 4316-76	4316-45	4316-41
(continued)			SW68A	POE	300/68	RL68HP		4316-76		
			SW68C	POE	300/68	RL68H	4316-44	4316-46	4316-45	4316-41
			E68	POE	300/68	RL68H	4316-44	4316-46	4316-45	4316-41
			SW100	POE	500/100	RL100E		4317-66		
			E100	POE	500/100	RL100E		4317-66		
			SW220	POE	1100/220	RL220H+		4318-66	4318-65	
			SW220XL	POE	1100/220	RL220XL			4318-75	
			266	Mineral	150/32	C-3s		4303-07	4303-05	4303-01
			299	Mineral	300/68	C-4s		4304-07	4304-05	4304-01
Copeland	Compressor	Ultra 22CC	998-E022-01	POE	110/22	RL32-3MAF	4314-64	4314-66	4314-65	
		Ultra 32CC	998-E022-XX	POE	110/22	RL32-3MAF	4314-64	4314-66	4314-65	
Copeland/		Solest 170	998-E170-01 (1g)	POE	800/170	RL170H		4318-26	4318-25	
Bitzer		Solest 170	998-E170-05 (5g)	POE	800/170	RL170H		4318-26	4318-25	
		4214-320	998-E320-01 (1g)	POE	1500/320	Call Nu-Calgon				
		4214-320	998-E320-05 (5g)	POE	1500/320	4319-05			4319-05	
		Ultra AB150	998-AB15-01	AB	150/32	Zerol 150		4310-07	4310-05	4310-01
		Ultra AB200	998-AB52-01	AB	200/46	Zerol 200TD		4308-07	4308-05	4308-01
		Ultra AB300	998-AB30-01	AB	300/68	Zerol 300		4311-07	4311-05	4311-01
		Ultra M150	998-M150-01 (1g)	Mineral	150/32	C-3s		4303-07	4303-05	4303-01
		Ultra M150	998-M150-05 (1g)	Mineral	150/32	C-3s		4303-07	4303-05	4303-01
CPI	Oil	Solest	22	POE	100/22	RL22H		4313-46		
			LT-32	POE	150/33	RL32H	4314-44	4314-46	4314-45	4314-41
			32	POE	150/32	RL32H	4314-44	4314-46	4314-45	4314-41
			LT-35	POE	150/35	RL32H	4314-44	4314-46	4314-45	4314-41
			46	POE	200/46	RL46H		4315-46		
			68	POE	300/68	RL68H	4316-44	4316-46	4316-45	4316-41
			100	POE	500/100	RL100E		4317-66		
			120	POE	600/120	N/A				
			150	POE	700/150	N/A				
			170	POE	800/170	RL170H		4318-26	4318-25	
			220	POE	1100/220	RL220H+		4318-66	4318-65	
			CP-4214-320	POE	1500/320	4319-05			4319-05	
			370	POE	1700/370	N/A				
Dunham Bush	Compressor	Hitachi	SR-30	POE	1100/220	RL220H+		4318-66	4318-65	
Frick	Compressor	Frick Oil	2	Mineral	150/32	C-3s		4303-07	4303-05	4303-01
			2A	Mineral	300/68	C-4s		4304-07	4304-05	4304-01
			3	Mineral	300/68	C-4s		4304-07	4304-05	4304-01
Fuchs	Oil	Reniso Triton	SEZ15	POE	75/15	N/A				
			SEZ22	POE	100/22	RL22H		4313-46		
			SEZ32	POE	150/32	RL32H	4314-44	4314-46	4314-45	4314-41
			SEZ55	POE	275/55	RL46H		4315-46		
			SEZ68	POE	300/68	RL68H	4316-44	4316-46	4316-45	4316-41
			SEZ80	POE	400/80	RL100E		4317-66		
			SEZ100	POE	500/100	RL100E		4317-66		
			SEZ170	POE	800/170	RL170H		4318-26	4318-25	
			SEZ220	POE	1100/220	RL220H+		4318-66	4318-65	
			SEZ320	POE	1600/320	Call Nu-Calgon				
		Reniso	KM32	Mineral	150/32	C-3s		4303-07	4303-05	4303-01
			KS46	Mineral	200/46	N/A				

Nu-Calgon Refrigeration Oil Cross-Reference

Company	Company Type	Brand Name	Product #	Oil Type	Viscosity SUS/ISO	Nu-Calgon Replacement	Nu-Calgon Product #			
							Quart	Gallon	5 Gallon	Drum
Fuchs			KC68	Mineral	300/68	C-4s		4304-07	4304-05	4304-01
(continued)			KES100	Mineral	500/100	C-5s		4305-07		4305-01
			TES100	Mineral	500/100	C-5s		4305-07		4305-01
			SP32	AB	150/32	Zerol 150		4310-07	4310-05	4310-01
			KM46	AB	200/46	Zerol 200TD		4308-07	4308-05	4308-01
			SP32	AB	150/32	Zerol 150		4310-07	4310-05	4310-01
			S32	AB	150/32	Zerol 150		4310-07	4310-05	4310-01
			SP46	AB	200/46	Zerol 200TD		4308-07	4308-05	4308-01
			S46	AB	200/46	Zerol 200TD		4308-07	4308-05	4308-01
			SP68	AB	300/68	Zerol 300		4311-07	4311-05	4311-01
			S68	AB	300/68	Zerol 300		4311-07	4311-05	4311-01
			SP100	AB	500/100	Zerol 500			4312-05	
			SP220	AB	1100/220	RL220H+		4318-66	4318-65	
			MS32	AB or Min	150/32	Zerol 150 or C-3s		4310-07 4303-07	4310-05 4303-05	4310-01 4303-01
			MS46	AB	200/46	Zerol 200TD		4308-07	4308-05	4308-01
			MS68	AB or Min	300/68	Zerol 300 or C-4s		4311-07 4304-07	4311-05 4304-05	4311-01 4304-01
Hatco	Oil	Hatcol	All varieties			Call Nu-Calgon				
Maneurop	Compressor		160P	Mineral	150/32	C-3s		4303-07	4303-05	4303-01
			160PZ	POE	150/32	RL32H	4314-44	4314-46	4314-45	4314-41
			160SZ	POE	150/32	RL32H	4314-44	4314-46	4314-45	4314-41
			160ABM	AB	150/32	Zerol 150		4310-07	4310-05	4310-01
Mobil	Oil	Artic	EAL22CC	POE	150/32	RL32-3MAF	4314-64	4314-66	4314-65	
			EAL22	POE	100/22	RL22H		4313-46		
			EAL32	POE	150/32	RL32H	4314-44	4314-46	4314-45	4314-41
			EAL46	POE	200/46	RL46H		4315-46		
			EAL68	POE	300/68	RL68H	4316-44	4316-46	4316-45	4316-41
		Gargoyle	155	Mineral	150/32	C-3s		4303-07	4303-05	4303-01
		Zerice	S32	AB	150/32	Zerol 150		4310-07	4310-05	4310-01
			R42	AB	150/32	Zerol 150		4310-07	4310-05	4310-01
			S46	AB	200/46	Zerol 200TD		4308-07	4308-05	4308-01
			S68	AB	300/68	Zerol 300		4311-07	4311-0	4311-01
			S100	AB	500/100	Zerol 500			4312-05	
Refcomp	Compressor		ICI 68S	POE	X/X	RL68H	4316-44	4316-46	4316-45	4316-41
Tecumseh	Compressor		Type=1	Mineral						
			Type=2	AB	(Refer to Mineral)					
			Type=3	White Oil	(Refer to Mineral)					
			Type=4	Paraffinic						
			Type=5	POE						
Texaco	Oil	Capella	HFC22	POE	150/22	RL22H		4313-46		
			HFC32	POE	150/32	RL32H	4314-44	4314-46	4314-45	4314-41
			HFC68	POE	300/68	RL68H	4316-44	4316-46	4316-45	4316-41
			HFC220	POE	1100/220	RL220H+		4318-66	4318-65	
			HFC32NA	POE	150/32	RL32H	4314-44	4314-46	4314-45	4314-41
			HFC68NA	POE	300/68	RL68H	4316-44	4316-46	4316-45	4316-41
			HFC100NA	POE	500/100	RL100E		4317-66		
			HFC220NA	POE	1100/220	RL220H+		4318-66	4318-65	
			B (WF32)	Mineral	150/32	C-3s		4303-07	4303-05	4303-01
			D (WF68)	Mineral	300/68	C-4s		4304-07	4304-05	4304-01
			E (WF100)	Mineral	500/100	C-5s		4305-07		4305-01
Thermo King	Compressor		203-413	POE	150/32	RL32H	4314-44	4314-46	4314-45	4314-41
			203-426	POE	150/32	RL32H	4314-44	4314-46	4314-45	4314-41

Nu-Calgon Refrigeration Oil Cross-Reference

Company	Company Type	Brand Name	Product #	Oil Type	Viscosity SUS/ISO	Nu-Calgon Replacement	Nu-Calgon Product #			
							Quart	Gallon	5 Gallon	Drum
Thermo King			203-427	POE	750/150	RL170H		4318-26	4318-25	
(continued)			203-433	POE	150/32	RL32-3MAF	4314-64	4314-66	4314-65	
			203-513	POE	150/32	RL32H	4314-44	4314-46	4314-45	4314-41
			67-404	AB	150/32	Zerol 150		4310-07	4310-05	4310-01
			67-426	Mineral	150/32	C-3s		4303-07	4303-05	4303-01
			306328	Mineral	300/68	C-4s		4304-07	4304-05	4304-01
			306327	Mineral	500/100	C-5s		4305-07		4305-01
Trane	Equipment	Trane	0027	POE	150/32	RL32H	4314-44	4314-46	4314-45	4314-41
			0037	POE	300/68	RL68H	4316-44	4316-46	4316-45	4316-41
			0048	POE	300/68	RL68H	4316-44	4316-46	4316-45	4316-41
			0152	POE	200/46	RL46H		4315-46		
			0075	POE	300/68	RL68H	4316-44	4316-46	4316-45	4316-41
			0078	POE	150/32	RL32HB			4314-62	
			0079	POE	150/32	RL32H	4314-44	4314-46	4314-45	4314-41
			0086	POE	500/100	RL100E		4317-66		
			015	Mineral	300/68	C-4s		4304-07	4304-05	4304-01
			022	Mineral	300/68	C-4s		4304-07	4304-05	4304-01
			031	Mineral	300/68	C-4s		4304-07	4304-05	4304-01
			042	Mineral	150/32	C-3s		4303-07	4303-05	4303-01
			043	Mineral	150/32	C-3s		4303-07	4303-05	4303-01
			045	Mineral	300/68	C-4s		4304-07	4304-05	4304-01
			057	Mineral	150/32	C-3s		4303-07	4303-05	4303-01
			058	Mineral	300/68	C-4s		4304-07	4304-05	4304-01
Vilter	Compressor		D	Mineral	300/68	C-4s		4304-07	4304-05	4304-01
			F-68	AB	300/68	Zerol 300		4311-07	4311-05	4311-01
Virginia KMP	Chemical		SL22	POE	100/22	RL22H		4313-46		
			SL32	POE	150/32	RL32H	4314-44	4314-46	4314-45	4314-41
			SL46	POE	200/46	RL46H		4315-46		
			SL68	POE	300/68	RL68H	4316-44	4316-46	4316-45	4316-41
			SL100	POE	500/100	RL100E		4317-66		
		Suniso	3GS	Mineral	150/32	C-3s		4303-07	4303-05	4303-01
			4GS	Mineral	300/68	C-4s		4304-07	4304-05	4304-01
			5GS	Mineral	500/100	C-5s		4305-07		4305-01
		Virginia KMP	AB150	AB	150/32	Zerol 150		4310-07	4310-05	4310-01
			AB200A	AB	200/46	Zerol 200TD		4308-07	4308-05	4308-01
			AB300	AB	300/68	Zerol 300		4311-07	4311-05	4311-01
York	Equipment		TypeA	Min/AB	300/68	C-4s or Zerol 300		4304-07 4311-07	4304-05 4311-05	4304-01 4311-01
			C	Mineral	300/68	C-4s		4304-07	4304-05	4304-01
			D	Mineral	150/32	C-3s		4303-07	4303-05	4303-01
			E	Mineral	500/100	C-5s		4305-07		4305-01
			F	Min/AB	150/32	C-3s or Zerol 150		4303-07 4310-07	4303-05 4310-05	4303-01 4310-01
			G	POE	1100/220	RL220H+		4318-66	4318-65	
			H	POE	300/68	RL68H	4316-44	4316-46	4316-45	4316-41
			J	POE	200/46	RL46H		4315-46		
			K	POE	150/32	RL32H	4314-44	4314-46	4314-45	4314-41
			L	POE	Call Nu-Calgon			4317-76		
			(P) 011-00589	POE	750/150	N/A				
			S	POE	500/100	RL100E		4317-66		

WEIGHT OF REFRIGERANT IN COPPER PIPE

Weight of Refrigerants in Copper Lines During Operation (Pounds per 100 lineal feet of type "L" tubing).

Line Size O.D. in Inches	Refrigerant	Liquid Line	Hot Gas Line	Suction Line at Suction Temperature				
				-40˚F	-20˚F	0˚F	+20˚F	+40˚F
3/8	134a	4.0	.15	.01	.01	.02	.04	.06
	22	3.9	.22	.02	.03	.04	.06	.08
	R507, 404A	3.4	.31	.03	.04	.06	.09	.13
1/2	134a	7.4	.30	.01	.03	.04	.07	.11
	22	7.4	.41	.03	.05	.07	.11	.15
	R507, 404A	6.4	.58	.04	.07	.13	.16	.24
5/8	134a	11.9	.47	.02	.05	.07	.12	.17
	22	11.8	.65	.05	.08	.12	.17	.25
	R507, 404A	10.3	.93	.07	.11	.17	.25	.35
7/8	134a	24.7	.99	.05	.10	.15	.24	.36
	22	24.4	1.35	.10	.16	.24	.36	.51
	R507, 404A	21.2	1.92	.15	.23	.37	.51	.72
1 1/8	134a	42.2	1.70	.08	.17	.26	.41	.60
	22	41.6	2.30	.17	.28	.42	.61	.87
	R507, 404A	36.1	3.27	.26	.39	.63	.86	1.24
1 3/8	134a	64.2	2.57	.14	.26	.40	.61	1.91
	22	63.5	3.50	.27	.42	.64	.93	1.33
	R507, 404A	55.0	4.98	.40	.58	.95	1.32	1.87
1 5/8	134a	90.9	3.65	.20	.37	.57	.87	1.30
	22	90.0	4.96	.37	.59	.90	1.33	1.88
	R507, 404A	78.0	7.07	.56	.82	1.35	1.86	2.64
2 1/8	134a	158	6.34	.34	.64	.98	1.51	2.24
	22	156	8.61	.65	1.03	1.57	2.30	3.26
	R507, 404A	134	12.25	.98	1.43	2.35	3.23	4.58
2 5/8	134a	244	9.78	.52	.99	1.51	2.32	3.47
	22	241	13.70	1.01	1.59	2.42	3.54	5.03
	R507, 404A	209	18.92	1.51	2.21	3.62	5.00	7.07
3 1/8	134a	348	13.97	.75	1.41	2.16	3.31	4.96
	22	344	18.95	1.44	2.28	3.45	5.05	7.18
	R507, 404A	298	27.05	2.16	3.15	5.17	7.14	9.95
3 5/8	134a	471	18.90	.99	1.91	2.92	4.48	6.69
	22	465	25.60	1.94	3.08	4.67	6.83	9.74
	R507, 404A	403	36.50	2.92	4.25	6.97	19.65	13.67
4 1/8	134a	612	24.56	1.29	2.49	3.81	5.84	8.75
	22	605	33.40	2.53	4.01	6.08	8.90	12.70
	R507, 404A	526	47.57	3.80	5.55	9.09	12.58	17.80

Equivalent Feet of Pipe Due to Valve and Fitting Friction

Copper Tuber, O.D., Type "L"	1/2	5/8	7/8	1 1/8	1 3/8	1 5/8	2 1/8	2 5/8	3 1/8	3 5/8	4 1/8	5 1/8	6 1/8
Globe Valve (Open)	14	16	22	28	36	42	57	69	83	99	118	138	168
Angle Valve (Open)	7	9	12	15	18	21	28	34	42	49	57	70	83
90˚ Turn Through Tee	3	4	5	6	8	9	12	14	17	20	22	28	34
Tee (Straight Through) or Sweep Below	.75	1	1.5	2	2.5	3	3.5	4	5	6	7	9	11
90˚ Elbow or Reducing Tee (Straight Through	1	2	2	3	4	4	5	7	8	10	12	14	16

CAPILLARY TUBING

Capillary Tubing - Factors Affecting Refrigerant Flow (Diameter & Length)

The size of the cap tube is fairly critical. Unlike orifices, such as expansion valve seats, capillary tubes depend on their length as well as their diameter to determine their total restriction. The relationship between these two factors are shown in the following charts. A change in diameter on a percentage basis can change the flow more than an equal change in length. To illustrate, changing the diameter by .005" as between .026" I.D. and .031" I.D. can double the flow. Restriction can also be changed by lengthening or shortening the cap tub. The longer the tube, the slower the flow; the shorter the tube, the faster the flow. The general flow curve graph (right) shows what happens to the flow of refrigerant through a cap tube as the length is changed. This curve is not meant to give specific flows but to simply illustrate what happens with all cap tubes so that the general flow pattern can be understood.

By following the flow curve from left to right it can be seen that for the very longest length the flow is the smallest. Then as the cap tube length is decreased, the flow increases slowly until critical point "L" is reached. At this point the flow increases more rapidly with each reduction in length until critical point "S" is reached. From this point on, further decrease in length causes ever increasing flow. From the study of this typical curve, certain pertinent conclusions can be reached that directly affect the field application of capillary tubes.

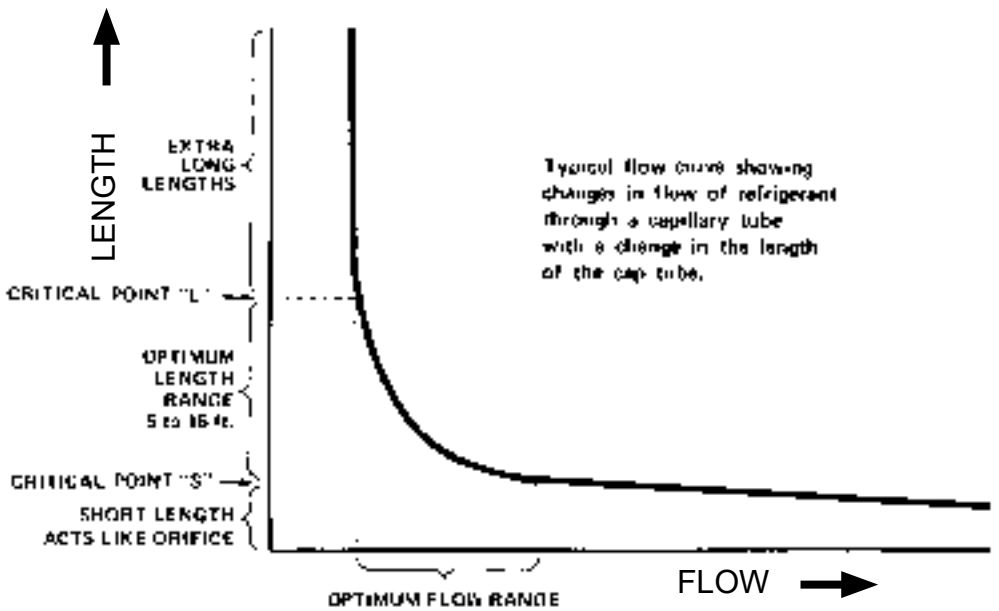

Typical flow curve showing changes in flow of refrigerant through a capillary tube with a change in the length of the cap tube.

On the graph, the section above the critical point "L" is marked as extra long lengths. Attempting to increase restriction (i.e. reduce flow) by increasing length into this region is not only uneconomical but frequently hopeless. In addition, tubes in this range may not be responsive enough to changes in head pressures during operation. All in all, tube lengths in this range should be avoided where possible.

Continuing down the graph, the section below critical point "S" should be avoided like the plague. In this range, the tube is so short that even small changes in length will cause very large increases in flow. This is caused by the fact that the length no longer affects the flow and the tube now begins to act more like an orifice than a capillary tube. But, without the other components necessary to control an orifice, such as are present in an expansion valve or high side float, a very short cap tube will give wildly erratic operation under varying ambient and loads.

All of this would be meaningless without some definite way to use this information. Although the critical points will vary depending on the I.D. of the cap tubing being used, a very safe operating rule-of-thumb can be offered.

RULE OF THUMB
Keep the cap tube no shorter than 5' and no longer than 16'. As in all general rules there are of course exceptions, but for day to day operation, keeping a cap tub within the 5' to 16' range will eliminate many problems.

An easy way to avoid these problems is to use the R-Line application charts and R-Line capillary tubing. These charts offer recommendations for almost all cap tube systems from 1/20 HP to 5 HP, plus any air conditioner from small window units to large central systems using multiple cap tubes.

CAPILLARY TUBING

Capillary Tubing - Length Conversion Chart

This conversion chart enables the user to translate the recommended length of tube diameter into sizes stocked by J/B. In using the chart it is recommended that conversions be made using factors within the unshaded area.

Part#	TC-26	TC-31	TC-36	TC-42	TC-44	TC-49	TC-50	TC-54	TC-55	TC-59	TC-64	TC-70	TC-75	TC-80	TC-85	TC-90	TC-100
Tube ID	.026	.031	.036	.042	.044	.049	.050	.054	.055	.059	.064	.070	.075	.080	.085	.090	.100
.024	1.44																
.025	1.20																
.026	1.00	2.24															
.028	.72	1.59															
.030	.52	1.16															
.031	.45	1.00	2.00														
.032		.86	1.75														
.033		.75	1.54														
.034		.65	1.35														
.035		.58	1.16	2.31													
.036		.50	1.00	2.10													
.037		.45	.90	1.79	2.22												
.038		.39	.80	1.59	1.92												
.039		.35	.71	1.41	1.75												
.040		.31	.62	1.25	1.55	2.51											
.041		.28	.56	1.12	1.38	2.26	2.50										
.042		.25	.50	1.00	1.24	2.03	2.23										
.043		.23	.45	.87	1.11	1.83	1.98										
.044		.20	.39	.81	1.00	1.62	1.79										
.045			.35	.73	.90	1.47	1.60	2.32									
.046			.32	.67	.82	1.34	1.47	2.08	2.27								
.047				.59	.74	1.20	1.31	1.89	2.06								
.048				.54	.67	1.10	1.20	1.72	1.87								
.049				.49	.61	1.00	1.09	1.55	1.69								
.050				.45	.56	.91	1.00	1.43	1.56	2.14							
.051				.41	.51	.84	.93	1.31	1.44	1.96							
.052					.47	.76	.85	1.19	1.32	1.78							
.053					.43	.69	.78	1.09	1.20	1.64							
.054					.39	.65	.70	1.00	1.09	1.52	2.18						
.055					.36	.59	.64	.92	1.00	1.38	2.00						
.056						.54	.60	.85	.94	1.27	1.85						
.057						.50	.55	.79	.87	1.17	1.72						
.058						.46	.51	.73	.80	1.07	1.56						
.059						.42	.47	.67	.73	1.00	1.44	2.18					
.060						.39	.43	.62	.67	.93	1.33	2.04					
.064							.32	.47	.50	.69	1.00	1.50	2.07				
.070								.30	.33	.46	.67	1.00	1.37	1.84			
.075											.48	.73	1.00	1.37	1.75		
.080												.54	.74	1.00	1.32	1.71	
.085													.57	.76	1.00	1.29	
.090													.43	.62	.76	1.00	1.62
.095														.46	.60	.79	1.27
.100															.48	.62	1.00
.105																.49	.80
.110																	.65
.115																	.53
.120																	.43

To Use Chart

1. Locate recommended cap tube I.D. in left hand column.
2. Read across and find conversion factor under copper cap tube size.
3. Multiply the given length of the recommended cap tube by the conversion factor.
4. The resultant length (Min. 5'/ Max.16') of copper cap tube will give the same flow characteristics as the original recommended cap tube.

Example

Recommended cap tube: 9'–.040 I.D.
Locate .040 in left hand column and reading across gives the following conversion factor: No. TC-36 (.62) and TC-42 (1.25).

Multiplying the recommended cap tube length of 9' by the conversion factor gives the following results: 5½"-TC-36 and 11¼'–TC-42. Either of these two cap tubes will give the same results as the original cap tube of 9'–.040 I.D.

Conversion Chart - Purpose

The "Capillary Tube Length Conversion Chart" was developed to enable users of capillary tubing to use the standard tubing sizes which are available through Refrigeration Jobbers everywhere.

While many original equipment manufacturers and condensing unit manufacturers recommend specific lengths and diameters of capillary tubing for their units, these tube sizes are not always readily available except of special order.

This conversion chart enables the user to translate the recommended length into that of a tube diameter that can be quickly obtained. In using the chart, it is recommended that conversions be made using factors within the unshaded area. In addition, it is highly recommended that the minimum length of capillary used be 5 feet.

CAPILLARY TUBING

AIR-CONDITIONING APPLICATION CHART (R-22)

B.T.U./ CIRCUIT	CAP TUBE		B.T.U./ CIRCUIT	CAP TUBE	
	Length	Size		Length	Size
4000	69 in	TC-49	8750	78 in	TC-75
4250	63 in	TC-49	9000	72 in	TC-75
4500	90 in	TC-54	9250	67 in	TC-75
4750	81 in	TC-54	9500	84 in	TC-80
5000	72 in	TC-54	9750	84 in	TC-80
5250	63 in	TC-54	10,000	76 in	TC-80
5500	101 in	TC-64	10,250	72 in	TC-80
5750	94 in	TC-64	10,500	68 in	TC-80
6000	87 in	TC-64	10,750	64 in	TC-80
6250	79 in	TC-64	11,000	60 in	TC-80
6500	72 in	TC-64	11,250	87 in	TC-85
6750	64 in	TC-64	11,500	84 in	TC-85
7000	90 in	TC-70	11,750	78 in	TC-85
7250	84 in	TC-70	12,000	72 in	TC-85
7500	78 in	TC-70	12,500	82 in	TC-90
7750	73 in	TC-70	13,000	72 in	TC-90
8000	69 in	TC-70	13,500	66 in	TC-90
8250	64 in	TC-70	14,000	60 in	TC-90
8500	84 in	TC-75			

R-134a – It is suggested to add 10% to length.

Recommended capillary tube lengths for each circuit in an air conditioner evaporator where R-22 is the refrigerant. All recommendations must be considered approximate and variations may arise in actual field applications.

Window air conditioners normally have 1 circuit and the recommended cap tube can be read directly from the chart. Larger units have 2 or more circuits in the evaporator. Where this is the case, simply divide the total BTU rating of the unit by the number of cap tube circuits to obtain the BTU/CIRCUIT rating of each individual cap tube.

Example:
Air conditioner is rated at 27,000 BTU and has 3 cap tubes connected to the evaporator. Divide 27,000 by 3 = 9,000 BTU/Circuit. From the chart, this would call for .075 I.D. (TC-75) 72 inch long.The length and I.D. of any cap tube may be adjusted to a more readily available size by using the conversion chart.

REFRIGERATION APPLICATION CHART (R-12 AND R-22)*

			NORMAL EVAPORTING TEMPERATURE DEGREES F							
H.P.	REF.	NOTE	-10 to +5		+5 to +20		+20 to +35		+35 to +50	
1/20	R12	S-F	16 Ft.	TC-26	10 Ft.	TC-26				
1/12	R12	S-F	12 Ft.	TC-26	12 Ft.	TC-31				
1/9	R12	S	12 Ft.	TC-26	12 Ft.	TC-31				
1/9	R12	S	10 Ft.	TC-26	10 Ft.	TC-31				
1/8	R12	S-F	10 Ft.	TC-26	10 Ft.	TC-31				
1/6	R12	S	12 Ft.	TC-31	12 Ft.	TC-36	8 Ft.	TC-36	10 Ft.	TC-42
1/6	R12	F	10 Ft.	TC-31	10 Ft.	TC-36				
1/5	R12	S	10 Ft.	TC-31	10 Ft.	TC-36	7-1/2 Ft.	TC-42	7-1/2 Ft.	TC-49
1/5	R12	F	8 Ft.	TC-31	8 Ft.	TC-36	10 Ft.	TC-42	6 Ft.	TC-42
1/4	R22	S-F	12 Ft.	TC-36	6 Ft.	TC-36	8-1/2 Ft.	TC-42	6 Ft.	TC-49
1/4	R12	F	10 Ft.	TC-36	6 Ft.	TC-36	8 Ft.	TC-42	6 Ft.	TC-49
1/3	R22	F	10 Ft.	TC-36	6 Ft.	TC-36	11 Ft.	TC-49		
1/3	R12	F	12 Ft.	TC-42	6 Ft.	TC-42	9 Ft.	TC-49	6 Ft.	TC-54
1/2	R22	F	6 Ft.	TC-36	9 Ft.	TC-42	7-1/2 Ft.	TC-54	10 Ft.	TC-64
1/2	R12	F	11 Ft.	TC-54	9 Ft.	TC-49				
3/4	R22	F	11 Ft.	TC-54	9 Ft.	TC-54				
3/4	R12	F	7-1/2 Ft.	TC-54	12 Ft.	TC-70	1 Ft.	TC-80		
1	R22	F	10 Ft.	TC-64	12 Ft.	TC-70				
1	R12	F	10 Ft.	TC-70	11 Ft.	TC-54	7-1/2 Ft.	TC-54 (2 pcs)		
1-1/2	R22	F	7-1/2 Ft.	TC-54 (2 pcs)	7-1/2 Ft.	TC-54 (2 pcs)	8 Ft.	TC-64 (2 pcs)		
1-1/2	R12	F			9 Ft.	TC-64 (2 pcs)	10 Ft.	TC-80 (2 pcs)		
2	R22	F			10 Ft.	TC-70 (2 pcs)	9 Ft.	TC-75 (2 pcs)		
2	R12	F	10 Ft.	TC-70 (2 pcs)	9 Ft.	TC-75 (2 pcs)	10 Ft.	TC-85 (2 pcs)		
3	R22	F			10 Ft.	TC-70 (3 pcs)	9 Ft.	TC-75 (3 pcs)		
3	R12	F	10 Ft.	TC-70 (2 pcs)	8 Ft.	TC-64 (4 pcs)	10 Ft.	TC-80 (4 pcs)		
4	R22	F			10 Ft.	TC-70 (4 pcs)	9 Ft.	TC-75 (4 pcs)		
4	R12	F			10 Ft.	TC-70 (5 pcs)	9 Ft.	TC-75 (5 pcs)		
5	R12	F			10 Ft.	TC-80 (5 pcs)	9 Ft.	TC-85 (5 pcs)		

NOTE: Condenser Type: S = Static, F = FAN

***R-134a** – It is suggested to add 10% to length.

PART #	PG	LIST	PART #	PG	LIST	PART #	PG	LIST	PART #	PG	LIST
008276-16-EME	720	$583.00	035485-IPX	226	$6.40	0386-0403-VIC	811	$365.00	1-6005-RBM	721	$133.40
008276-72-EME	720	$605.00	035503-IPX	226	$7.10	0386-0410-VIC	811	$249.20	1-6006-RBM	721	$161.70
008360-16-EME	720	$352.00	035504-IPX	226	$7.40	0386-0500-VIC	809	$232.90	1-6007-RBM	721	$188.70
008361-12-EME	720	$302.00	035509-IPX	226	$5.30	0386-0503-VIC	812	$207.50	1-6009-RBM	721	$155.60
008362-12-EME	720	$300.00	035510-IPX	226	$5.80	0386-0505-VIC	812	$273.70	1-6024-RBM	721	$88.00
008363-12-EME	720	$300.00	035522-IPX	226	$4.30	0386-0561-VIC	821	$222.20	1-6027-RBM	721	$208.60
008403-16-EME	720	$418.00	035523-IPX	226	$4.70	0386-0725-VIC	809	$464.00	1-6038-RBM	721	$63.80
008403-79-EME	720	$576.00	035547-IPX	226	$8.00	0386-0726-VIC	809	$550.00	1-6039-RBM	721	$72.30
008418-16-EME	720	$617.00	035548-IPX	226	$8.90	0386-0835-VIC	809	$1,134.00	1-6040-RBM	721	$68.10
008507-16-EME	720	$433.00	035562-IPX	226	$3.20	0386-0849-VIC	814	$302.00	1-6041-RBM	721	$70.90
008519-12-EME	720	$274.90	035563-IPX	226	$3.70	0386-0857-VIC	814	$599.00	1-6042-RBM	721	$68.10
008519-16-EME	720	$282.20	0356-ALL	226	$9.00	0386-1090-VIC	809	$233.10	1-6043-RBM	721	$68.10
008621-12-EME	720	$274.90	035605-IPX	226	$2.70	0386-1091-VIC	809	$418.00	1-6044-RBM	721	$68.10
008658-16-EME	720	$1,075.00	035606-IPX	226	$3.70	0386-1200-VIC		$214.60	1-6045-RBM	721	$76.60
008658-74-EME	720	$1,492.00	035624-IPX	226	$5.60	0386-1226-VIC	812	$20.40	1-6046-RBM	721	$76.60
008658-87-EME	720	$1,477.00	035648-IPX	226	$2.50	0386-1293-VIC	811	$503.00	1-6047-RBM	721	$82.30
008659-16-EME	720	$1,160.00	035651-IPX	226	$3.20	0386-1299-VIC	811	$556.00	1-6048-RBM	721	$73.80
008746-16-EME	720	$677.00	035652-IPX	226	$3.20	0386-1370-VIC	814	$1,426.00	1-6051-RBM	721	$82.30
008747-16-EME	720	$535.00	035654-IPX	226	$3.20	0418030-BPT	730	$159.90	1-6053-RBM	721	$85.10
009548-16-EME	720	$606.00	035655-IPX	226	$3.20	0418050-BPT	730	$180.20	1-6058-RBM	721	$105.00
013316-02-EME	720	$312.00	035656-IPX	226	$3.20	047602-CPD	340	$63.60	1-6060-RBM	721	$100.70
013316-06-EME	720	$328.00	0357-ALL	226	$10.60	047612-CPD	340	$95.60	1-6064-RBM	721	$119.20
013325-01-EME	720	$0.00	035759-IPX	226	$2.20	047618-CPD	340	$95.50	1-6066-RBM	721	$131.90
013326-01-EME	720	$328.00	035760-IPX	226	$3.50	05280T-PAP	790	$40.20	1-6070-RBM	721	$147.60
013326-02-EME	720	$321.00	035761-IPX	226	$5.60	0560-5522-01-TES	859	$988.00	1-6074-RBM	721	$158.90
013327-01-EME	720	$285.60	035762-IPX	226	$6.00	0563-0510-TES	903	$727.00	1-6077-RBM	721	$168.80
013332-01-EME	720	$266.10	035764-IPX	226	$9.40	0564-3002-83-TES		$6,607.00	1-6079-RBM	721	$195.80
013332-03-EME	720	$288.80	035778-IPX	226	$5.10	0564-5501-01-TES	857	$1,520.00	1-6080-RBM	721	$195.80
013336-02-EME	720	$262.10	035779-IPX	226	$6.10	0564-5571-01-TES	857	$2,760.00	1-6113-RBM	721	$69.50
013336-03-EME	720	$262.10	035902-IPX	226	$13.20	05857-SWC	758	$68.00	1-6114-RBM	721	$67.50
013337-01-EME	720	$280.50	035903-IPX	226	$44.10	060012-CPD	340	$51.00	1-6141-RBM	721	$88.00
013337-03-EME	720	$282.20	035904-IPX	226	$45.70	060014-CPD	340	$51.00	1-6143-RBM	721	$177.40
013693-15-EME	720	$449.00	0364-IPX	226	$2.60	0613-5505-TES	857	$249.00	1-6161-RBM	721	$207.10
015565-07-EME	720	$417.00	0384-0947-VIC	812	$1,785.00	063208-CPD	340	$57.30	1/2-10FT-PLTD-SCR	202	$29.60
016141-CPD	340	$46.20	0384-0957-VIC		$3,277.00	065405-CPD	339	$69.70	1/2-25-DAH	200	$71.00
01689-SWC	758	$403.00	0384-0958-VIC	813	$4,756.00	065406-CPD	339	$76.00	1/2-3-HOLE-EME	723	$28.80
017671-37-EME	720	$750.00	0386-0090-VIC	811	$673.00	065407-CPD	339	$95.00	1/2W-1-1/8-INS	207	$33.70
02-C32004-ALL	232	$52.30	0386-0100-VIC	810	$277.40	065408-CPD	339	$107.60	1/2W-1-3/8-INS	207	$37.00
020-057-SCR	202	$57.20	0386-0101-VIC	810	$301.00	065410-CPD	339	$158.50	1/2W-1-5/8-INS	207	$42.60
020-1011-DAN	349	$99.00	0386-0102-VIC	810	$353.00	065411-CPD	339	$174.50	1/2W-1/2-INS	207	$24.40
020-1012-DAN	349	$109.00	0386-0103-VIC	810	$392.00	077811-IPX	226	$2.70	1/2W-1/4-INS	207	$20.80
020-1019-DAN	349	$202.10	0386-0104-VIC	810	$409.00	077812-IPX	226	$3.10	1/2W-2-1/8-INS	207	$54.40
020-1054-DAN	349	$228.70	0386-0105-VIC	810	$507.00	077813-IPX	226	$3.90	1/2W-2-5/8-INS	207	$73.40
026940-09-EME	720	$365.00	0386-0106-VIC	810	$726.00	077814-IPX	226	$4.70	1/2W-3-1/8-INS	207	$86.20
026941-11-EME	720	$345.00	0386-0112-VIC	811	$106.00	077815-IPX	226	$5.20	1/2W-3-5/8-INS	207	$113.70
026941-12-EME	720	$405.00	0386-0113-VIC	811	$118.60	077816-IPX	226	$7.60	1/2W-3/4-INS	207	$27.80
035408-IPX	226	$1.40	0386-0114-VIC	811	$139.70	0781-3652-VIC	814	$698.00	1/2W-3/8-INS	207	$22.90
035410-IPX	226	$2.90	0386-0115-VIC	811	$171.10	083-014-SCR	202	$6.50	1/2W-36-48-INS	207	$139.70
035411-IPX	226	$3.20	0386-0297-VIC	824	$74.20	083-022-SCR	202	$15.40	1/2W-4-1/8-INS	207	$125.80
035449-IPX	226	$1.40	0386-0308-VIC	809	$365.00	087-016-SCR	202	$11.00	1/2W-5/8-INS	207	$26.90
035451-IPX	226	$2.70	0386-0335-VIC	809	$1,530.00	087-018-SCR	202	$16.50	1/2W-7/8-INS	207	$30.10
035452-IPX	226	$2.90	0386-0336-VIC	809	$1,588.00	087-024-SCR	202	$19.10	1/4-10FT-PLTD-SCR	202	$7.90
035484-IPX	226	$5.20	0386-0365-VIC	810	$494.00	1-6000-RBM	721	$72.30	1/4-2-HOLE-EME	724	$30.00

PART #	PG	LIST
1/4-3-HOLE-EME	723	$29.20
1/4-3FT-PLTD-SCR	202	$2.60
1/4-AL-FAI		$3.60
1/4W-36-48-INS	207	$100.20
1/8-SEISMIC-KIT-ASE	203	$134.40
10/3-TEC-ECS	752	$8.30
100-A-FAI	222	$3.60
100-B-FAI	222	$5.00
100-C-FAI	222	$7.70
100-D-FAI	222	$11.90
100-E-FAI	222	$35.60
	738	$71.40
1001-KLE		$99.80
10017-BAR	824	$14.50
1004190-FIL	376	$77.60
10041C-MAR		$444.00
10048PC-MAR	654-655	$426.00
1005-KLE		$107.30
101-A-FAI	222	$4.10
101-B-FAI	222	$6.30
101-C-FAI	222	$8.70
101-D-FAI	222	$14.90
101-E-FAI	222	$37.80
1010-KLE		$87.30
1011-KLE		$49.80
102F-05-ALL	846	$14.20
102F-10-ALL	846	$20.30
102F-14-ALL	846	$24.40
103-A-FAI	222	$3.00
103-B-FAI	222	$4.10
103-C-FAI	222	$5.40
103-D-FAI	222	$8.40
103-E-FAI	222	$8.60
105-FF-SP-ALL	850	$90.10
105319-NFL	805	$30.00
106.44.SS-PPF	209	$177.30
1070-1-1/8-KAS	764	$199.10
1070-7/8-KAS	764	$229.20
1071-1-1/8-KAS	764	$416.00
1071-7/8-KAS	764	$220.40
1074-1-1/8-KAS	766	$394.00
1074-FLUSH-KAS	766	$394.00
1075-1-1/4-KAS	766	$540.00
1075-1-1/8-KAS	766	$564.00
1075-1-3/8-KAS	766	$564.00
1075-FLUSH-KAS	766	$589.00
1076-1-1/4-KAS	766	$834.00
1076-1-1/8-KAS	766	$827.00
1076-1-3/8-KAS	766	$831.00
108-130-125V-MAR	738	$18.40
108-130-250V-MAR	738	$32.40
108-130-330V-MAR	738	$34.70
1092-1-1/8-KAS	767	$461.00
1092-FLUSH-KAS	767	$406.00
10937-IMS	832	$65.10
1094H-1-1/8-KAS	767	$52.00
1094H-F-KAS	767	$52.00
1095-KAS	767	$283.50
10995-IMS	832	$88.80
10G711B-SPO	296	$4,488.00
10G711C-SPO	296	$4,739.00
10G79B-SPO	296	$4,325.00
11-291-RSW		$43.60
11-293-RSW		$40.50
110-BA-FAI	222	$1.30
110-CA-FAI	222	$2.60
110-CB-FAI	222	$1.70
110-DA-FAI	222	$5.30
110-DB-FAI	222	$3.80
110-DC-FAI	222	$3.50
110-EA-FAI	222	$16.90
110-EB-FAI	222	$8.50
110-EC-FAI	222	$5.70
110-ED-FAI	222	$6.10
110-HC-FAI	222	$13.40
110-HD-FAI	222	$13.80
110-HE-FAI	222	$9.90
1101-ALL	853	$355.00
11017-SND	824	$111.80
11055-KLE		$74.20
11057-KLE		$79.80
11063W-KLE		$107.20
11094000003-KAS	767	$309.00
111114-ALL	822	$94.40
1113-PRO	564	$10.80
112-A-FAI	222	$1.10
112-B-FAI	222	$1.40
112-C-FAI	222	$2.20
112-D-FAI	222	$4.00
112-E-FAI	222	$6.10
11201-ALL	738	$7.00
11206-ALL	738	$8.90
11207-ALL	738	$4.50
11208-ALL	738	$12.60
112107-REZ	738	$282.10
11211-ALL	738	$4.10
11212-ALL	738	$5.40
11577-MAR	786	$92.20
116-A-FAI	222	$5.80
116-B-FAI	222	$5.00
116-C-FAI	222	$7.40
116-D-FAI	222	$12.90
116-E-FAI	222	$21.10
116-FLU	909	$919.00
116/323-KIT-FLU	910	$1,437.00
116/62-MAX-PLUS-KIT-FLU	910	$1,203.00
117-FLU	909	$969.00
12/3-BX-ECS	752	$4.40
120-AA-FAI	222	$1.60
120-BA-FAI	222	$2.70
120-BB-FAI	222	$3.10
120-CA-FAI	222	$4.30
120-CB-FAI	222	$4.50
120-DB-FAI	222	$8.90
120-DC-FAI	222	$8.60
120-ED-FAI	222	$13.30
121-A-FAI	222	$0.90
121-B-FAI	222	$1.70
121-C-FAI	222	$2.80
121-D-FAI	222	$4.60
121-E-FAI	222	$7.50
12132-IMS	832	$16.80
12137-IMS	832	$37.40
1216-1-1/8-KAS	763	$83.00
1219-13004-JCS	571	$0.70
1219-130T4-JCS	571	$1.40
1219-44003-JCS	571	$0.90
12199-IMS	832	$35.40
122-A-FAI	222	$1.40
122-B-FAI	222	$2.00
122-BA-FAI	222	$2.60
122-C-FAI	222	$4.90
122-CA-FAI	222	$3.40
122-CB-FAI	222	$3.90
122-D-FAI	222	$6.70
122-DB-FAI	222	$7.30
122-DC-FAI	222	$6.00
122-E-FAI	222	$9.10
122-ED-FAI	222	$11.20
12204-ALL	739	$7.90
12205-ALL	739	$8.30
12206-ALL	739	$8.30
12210-ALL	739	$7.90
12211-MAR	739	$5.60
12212-ALL	739	$30.60
1227-OEM	903	$831.00
124-156-125V-MAR	738	$18.60
124-156-250V-MAR	738	$36.30
124-156-330V-MAR	738	$35.60
1245-1-1/2-KAS	766	$348.00
1245-1-1/4-BC-KAS	766	$343.00
1245-1-1/8-KAS	766	$343.00
1245-1-3/4-KAS	766	$361.00
1245-1-3/8-BC-KAS	766	$295.80
1245-1-5/8-KAS	766	$358.00
1245-1-7/8-KAS	766	$362.00
1245-2-KAS	766	$363.00
1245-FLUSH-KAS	766	$338.00
1246-01-CPD	892	$30.90
1246-02-CPD	892	$30.60
1248-1-1/2-CHR-KAS	766	$390.00
1248-1-1/4-KAS	766	$402.00
1248-1-3/4-CHR-KAS	766	$389.00
1248-1-3/8-KAS	766	$403.00
1248-1-5/8-CHR-KAS	766	$388.00
1248-FLUSH-CHR-KAS	766	$367.00
12585-IMS	832	$36.40
12587-IMS	832	$28.00
12589-IMS	832	$25.20
12591-IMS	832	$20.50
12592-IMS	832	$20.20
12632-IMS	832	$45.30
12634-IMS	832	$49.90
1266CS-PIC	755	$21.60
1267-KAS	763	$112.80
1268-15-PIC	755	$27.40
1277-1-1/4-KAS	766	$564.00
1277-1-3/8-KAS	766	$567.00
1277-FLUSH-KAS	766	$571.00
1277L-1-1/4-KAS	766	$556.00
1277L-1-1/8-KAS	766	$606.00
1277L-1-3/8-KAS	766	$560.00
127C-ALL	831	$44.30
12D11B-SPO	296-297	$3,922.00
12D11C-SPO	297	$3,922.00
12D13C-SPO	297	$3,978.00
12D17B-SPO	297	$5,911.00
1301V-TOO	749	$3.10
135-316-SCR	202	$0.30
135-451-SCR	202	$0.40
135-453-SCR	202	$0.80
135-455-SCR	202	$0.60
135-459-SCR	202	$0.90
135-500-SCR	202	$1.10
135-808-SCR	205	$4.90
135-810-SCR	205	$7.70
135-832-SCR	205	$1.60
135-838-SCR	205	$1.60
13655-ALL	226	$6.20
1366-15-PIC	755	$21.70
139-1-1/8-KAS	764	$511.00
1398-2-1/2-KAS	764	$694.00
1398-3-1/2-KAS	764	$526.00
14/2-BX-ECS	752	$2.60
14/3-BX-ECS	752	$3.50
14/3-TEC-ECS	752	$4.60
140F-04-ALL	850	$30.30
140F-06-ALL	850	$20.20
140F-08-ALL	850	$34.30
140F-12-ALL	850	$25.60

PART #	PG	LIST
140F-18-ALL	850	$67.50
141-914-SCR	202	$0.50
141-918-SCR	202	$1.40
141-922-SCR	202	$2.50
14145-ALL	807	$8.70
14175-ALL	807	$11.00
1421-0016-VIC	813	$352.00
1421-0034-VIC	813	$494.00
1421-0035-VIC	813	$494.00
1421-0084-VIC	813	$271.50
1423-0024-VIC	812	$16.40
1423-0061-VIC	812,824	$18.60
142F-ALL	850	$113.90
145-175-125V-MAR	738	$19.10
145-175-250V-MAR	738	$36.90
145-175-330V-MAR	738	$45.20
14536-RIT		$129.90
14548-RIT		$145.60
14560-RIT		$159.80
14571-ALL	859	$1,547.00
14572-RIT		$175.20
14596-RIT		$206.40
148-014-SCR	202	$7.50
148-016-SCR	202	$10.70
148-018-SCR	202	$12.70
148-022-SCR	202	$15.10
14940157-FEC	555	$62.70
14E23C2-R1021E-SPO	299-300	$825.00
15036-RIT	864	$108.30
15048-RIT	864	$123.00
15060-RIT	864	$133.40
1507-FLU	904	$2,864.00
15072-RIT	864	$148.50
1510-KAS	765	$97.80
1511-KAS	765	$98.70
151TP-MEG	834	$107.80
1521L-KAS	765	$206.10
1521R-KAS	765	$206.10
1522L-KAS	765	$203.00
1522R-KAS	765	$203.00
1527514-HCC	782	$60.80
1530-KAS	765	$96.80
15305-IMS	832	$16.30
15306-IMS	832	$17.40
15307-IMS	832	$18.40
15308-IMS	832	$18.90
15309-IMS	832	$21.80
1531-KAS		$98.40
15310-IMS	832	$22.30
15311-IMS	832	$23.50
15312-IMS	832	$27.00
15313-IMS	832	$35.10
15390-IMS	832	$249.20
15636-RIT	864	$154.60
15648-RIT	864	$176.90
15660-RIT	864	$190.60
15672-RIT	864	$211.40
15696-RIT	864	$265.80
157-014-SCR	202	$4.60
157-016-SCR	202	$6.20
157-018-SCR	202	$8.30
15725-RIT	864	$634.00
15750-RIT	864	$1,176.00
15799-RIT	864	$2,259.00
15848-FIL		$63.80
15860-RIT		$292.60
15872-RIT		$324.00
1587FC-FLU	904,909	$3,497.00
15896-RIT		$380.00
1591-15-PIC	755	$29.40
1595CS-PIC	755	$100.40
1597CS-PIC	755	$85.30
16060-RIT		$309.00
16082-ALL	226	$11.60
1609-101-EME	680	$248.00
1609-90-EME	680	$329.00
161-193-125V-MAR	738	$19.60
161-193-250V-MAR	738	$40.30
161-193-330V-MAR	738	$47.30
1613-2-3/16-SPO		$222.00
162-393-SCR	202	$12.90
162-395-SCR	202	$17.30
162-397-SCR	202	$17.40
162-398-SCR	202	$22.80
162-400-SCR	202	$45.10
1620-2-1/4-SPO		$203.80
16268-IPX	226	$2.50
1687-9-EME	680	$296.50
16C-ALL	237	$38.90
16D17B-SPO	297	$7,082.00
1700CS-PIC	755	$24.40
1704CS-PIC	755	$27.00
1705CS-PIC	755	$26.90
170S-L-KAS	768	$612.00
171C-L-S-KAS	768	$360.00
1723CS-PIC	755	$27.00
1724CS-PIC	755	$26.90
1725CS-PIC	755	$27.00
172C-L-S-KAS	768	$353.00
1749CS-PIC	755	$27.90
1750CS-PIC	755	$60.90
1751-ALL	869	$257.20
1755CS-PIC	755	$27.40
1756CS-PIC	755	$27.00
1760-15-PIC	755	$16.30
17723-IPX	226	$13.00
1786074-HCC	804	$84.20
179/EDA2-FLU	909	$1,671.00
17C-ALL	237	$49.70
1800CP-PIC	755	$24.50
1802-000002-KAS		$24.60
1803CS-PIC	755	$24.90
1804CS-PIC	755	$25.00
1805CS-PIC	755	$24.60
1806CP-PIC	755	$32.00
18072-RIT		$136.50
1823CS-PIC	755	$27.20
1824CS-PIC	755	$27.20
1825CS-PIC	755	$27.20
182TTFCD6026-RCI	714	$1,437.00
1838952-ALL	847	$580.00
1839015-ALL	848	$2,231.00
1839027-ALL	846	$125.60
1839032-ALL	846	$1,041.00
1839053-ALL	834	$71.60
1851CS-PIC	755	$26.40
1852CS-PIC	755	$39.50
1853CS-PIC	755	$39.80
1855CS-PIC	755	$26.00
1856CS-PIC	755	$25.90
1858-15-PIC	755	$20.90
18581-HCC	787	$101.00
1885381-ALL	845	$93.60
1885382-ALL	845	$190.20
1885383-ALL	845	$165.30
1885384-ALL	845	$357.00
1885385-ALL	845	$577.00
1885386-ALL	845	$59.70
1885387-ALL	845	$64.00
189-227-125V-MAR	738	$20.20
189-227-250V-MAR	738	$46.60
189-227-330V-MAR	738	$51.70
1891133-ALL	843	$89.70
1891134-ALL	843	$108.90
1891135-ALL	843	$109.10
1891137-ALL	843	$165.90
1891138-ALL	843	$182.50
1891180-ALL	843	$163.20
1891185-ALL	843	$195.40
1891187-ALL	843	$194.90
18973-RIT	232	$30.40
18974-RIT	232	$52.00
18975-RIT	232	$240.60
18978-RIT	232	$125.20
18979-RIT	232	$85.10
18980-RIT	232	$166.30
18993-RIT	234	$86.90
18997-RIT	232	$85.20
18C-ALL	237	$85.90
18E23C2-R1021E-SPO	299-300	$850.00
19002-MAR	744	$198.20
19003-MAR	744	$216.10
19004-MAR	744	$208.20
19005-MAR	744	$216.10
19006-MAR	744	$224.40
19007-MAR	744	$236.90
19008-MAR	744	$208.20
19009-MAR	744	$205.40
1900CP-PIC	755	$37.80
19010-MAR	744	$224.40
19019-BRA	752	$19.30
19020-BRA	752	$25.00
19022-RIT	232	$44.30
1903-15-PIC	755	$24.30
1904-15-PIC	755	$27.80
1905CP-PIC	755	$39.20
1906-15-PIC	755	$35.30
1906122-HCC	803	$28.90
19101-RIT	237	$35.80
19102-RIT	237	$44.90
19104-RIT	237	$67.10
19105-RIT		$62.40
19106-FIL		$48.20
19109-RIT	237	$62.00
1911-ALL	360	$807.00
19110-FIL	237	$62.30
19111-FIL	237	$62.50
19115-FIL	237	$74.10
19116-RIT	237	$47.50
19117-FIL	237	$74.10
19118-FIL	237	$80.20
19120-RIT	237	$92.50
19125-RIT	237	$58.00
19128-RIT	237	$75.80
19129-RIT	237	$79.10
1915-ALL	360	$895.00
19158-RIT	237	$130.70
1916-ALL	360	$776.00
19161-RIT	237	$55.70
19162-RIT	237	$55.70
19163-RIT	237	$87.70
19164-MAR	744	$89.70
19165-MAR	237,744	$89.70
19166-MAR	237	$89.70
19168-RIT	237	$62.50
19169-RIT	237	$86.80
1917-ALL	360	$467.00
19171-MAR	744	$89.70
1918-ALL	360	$604.00
1920-ALL	360	$451.00

PART #	PG	LIST	PART #	PG	LIST	PART #	PG	LIST	PART #	PG	LIST
19201-RIT	237	$37.50	196352-IPX	225	$7.60	1W-3/4-INS	207	$81.10	20C4-HUB	754	$8.60
19203-RIT	237	$75.80	196353-IPX	225	$17.00	1W-3/8-INS	207	$63.70	20C5-HUB	754	$9.00
19208-RIT	237	$64.60	196364-IPX	225	$26.90	1W-36-48-INS	207	$254.20	21-25-125V-MAR	738	$23.50
19209-RIT	237	$63.30	196453-IPX	225	$12.50	1W-4-1/8-INS	207	$372.00	21-25-250V-MAR	738	$19.30
1921-ALL	360	$544.00	196673-IPX	225	$14.30	1W-5/8-INS	207	$73.20	21-25-330V-MAR	738	$19.50
19210-RIT	237	$43.70	1A66W-633-EME	680	$89.50	1W-7/8-INS	207	$90.30	21024TCD-ALL	845	$32.70
19217-RIT	237	$77.00	1AC-A1-II-FLU	908	$140.60	2-6011-RBM	721	$133.40	2105-WMJ	778	$320.00
19220-RIT	237	$95.40	1E30N-311-EME		$88.50	2-6012-RBM	721	$134.80	21096-RIT	864	$135.60
1923-15-PIC	755	$36.20	1E50N-303-EME		$96.90	2-6014-RBM	721	$137.60	21150-RIT	864	$666.00
1923-ALL	360	$1,138.00	1E56N-361-EME		$105.50	2-6015-RBM	721	$157.50	2118-WMJ	778	$337.00
1925CP-PIC	755	$32.50	1E78-151-EME	676	$130.20	2-6016-RBM	721	$184.40	212-150-CPD	891	$155.50
193-10-FAI	223	$8.00	1F78-144-EME	676	$109.20	2-6017-RBM	721	$184.40	21200-RIT	864	$1,298.00
193-8-FAI	223	$6.50	1F85U-22NP-EME	679	$212.50	2-6018-RBM	721	$248.30	214-1-1/8-KAS	763	$180.60
193-S-SP-ALL	849	$95.60	1F85U-22PR-EME	677	$280.10	2-6019-RBM	721	$261.10	214-1-3/8-KAS	763	$196.60
194-D-FAI	223	$8.50	1F95-1277-EME	678	$650.00	2-6020-RBM	721	$299.40	214-4S-CBS	344	$151.70
194000-IPX	224	$85.10	1F97-1277-EME	678	$576.00	2-6021-RBM	721	$372.00	214-4ST-CBS	344	$190.20
194001-IPX	224	$198.50	1LAC-A-II-FLU	908	$140.60	2-6029-RBM	721	$133.40	214-6S-CBS	344	$173.10
194004-IPX	224	$185.60	1VL25-1/2-BPT	728	$102.50	2-6030-RBM	721	$134.80	214-7/8-KAS	763	$179.30
195-10-FAI	223	$8.30	1VL25-5/8-BPT	728	$102.50	2-6031-RBM	721	$144.70	2150-WMJ	778	$372.00
195-8-FAI	223	$7.00	1VL30-1/2-BPT	728	$104.00	2-6032-RBM	721	$144.70	216-259-125V-MAR	738	$21.80
19551-MAR	744	$220.70	1VL30-5/8-BPT	728	$123.80	2-6034-RBM	721	$177.40	216-259-250V-MAR	738	$50.90
1955CP-PIC	755	$22.80	1VL34-1/2-BPT	728	$96.20	2-6036-RBM	721	$177.40	216-259-330V-MAR	738	$53.80
1956CP-PIC	755	$54.80	1VL34-3/4-BPT	728	$137.40	2-6037-RBM	721	$376.00	2165-ALL	727	$117.40
195FC-SP-ALL	847	$159.70	1VL34-5/8-BPT	728	$96.20	2-6082-RBM	721	$140.50	2166-ALL	727	$35.40
196-D-FAI	223	$6.00	1VL40-1/2-BPT	728	$115.20	2-6083-RBM	721	$157.50	217-1-1/8-KAS	763	$193.50
196-E-FAI	223	$7.10	1VL40-3/4-BPT	728	$139.20	2-6084-RBM	721	$157.50	217-1-3/8-KAS	763	$200.60
196005-IPX	225	$272.50	1VL40-5/8-BPT	728	$97.50	2-6085-RBM	721	$171.70	217-7/8-KAS	763	$190.60
196006-IPX	225	$366.00	1VL40-7/8-BPT	728	$97.50	2-6087-RBM	721	$177.40	2188-WMJ	778	$400.00
196010-IPX	224	$12.80	1VL44-1/2-BPT	728	$124.40	2-6089-RBM	721	$252.60	21983-RIT	864	$223.90
196011-IPX	224	$33.30	1VL44-3/4-BPT	728	$150.20	2-6090-RBM	721	$273.80	21984-RIT	864	$258.70
196017-IPX	225	$45.70	1VL44-5/8-BPT	728	$105.20	2-6093-RBM	721	$345.00	21985-RIT	864	$278.50
196022-IPX	224	$14.00	1VL44-7/8-BPT	728	$146.00	20-1-10008-L-BDG	916	$77.00	21986-RIT	864	$315.00
196023-IPX	224	$36.60	1VP44-1-1/8-BPT	728	$145.50	20-1-103-S-BDG	916	$70.70	2200-20-MIL	908	$40.00
196025-IPX	224	$34.70	1VP50-1-1/8-BPT	728	$176.90	20-1-10605B-S-BDG	916	$36.90	2202-20-MIL	829,908	$56.60
196035-IPX	224	$12.80	1VP50-3/4-BPT	728	$176.40	20-1-1200-M-BDG	916	$18.30	2203-20-MIL	908	$66.80
196040-IPX	225	$36.80	1VP50-5/8-BPT	728	$146.00	20-1-1215-S-BDG	916	$31.10	221-412-WAG	758	$84.40
196042-IPX	225	$41.90	1VP50-7/8-BPT	728	$176.90	200-240-125V-MAR	738	$23.10	221-413-WAG	758	$52.90
196050-IPX	225	$9.90	1VP56-1-1/8-BPT	728	$238.20	2000-0D-JSA	862	$349.00	221-415-WAG	758	$42.30
196051-IPX	225	$24.80	1VP56-3/4-BPT	728	$263.50	2001D-JSA	862	$391.00	22112-RIT	864	$229.40
196056-IPX	224	$18.20	1VP56-5/8-BPT	728	$184.50	2002D-JSA	862	$391.00	2216-WMJ	778	$460.00
196061-IPX	224	$39.00	1VP56-7/8-BPT	728	$238.20	2003D-JSA	862	$403.00	2238-06-CPD	892	$67.80
196071-IPX	224	$13.50	1VP62-1-1/8-BPT	728	$291.30	2005N-KLE	828	$115.60	2245-03-CPD	889	$81.30
196082-IPX	224	$22.30	1VP62-3/4-BPT	728	$610.00	2006D-JSA	862	$407.00	225-1530-DYN	917-918	$17.90
196083-IPX	224	$39.80	1VP62-5/8-BPT	728	$344.00	2008D-JSA	862	$325.00	225-1550-DYN	917-918	$49.20
196125-IPX	225	$337.00	1VP62-7/8-BPT	728	$291.30	2010D-JSA	862	$299.00	225B-TBC	210	$13.90
196232-IPX	224	$11.20	1W-1-3/8-INS	207	$127.10	2031F-MAR		$62.80	225W-TBC	210	$13.90
196233-IPX	224	$31.60	1W-1-5/8-INS	207	$141.00	206004-PKR	343	$283.10	227-046-SCR	205	$10.40
196242-IPX	224	$11.00	1W-1/2-INS	207	$68.80	206005-PKR	343	$283.10	227-050-SCR	205	$12.40
196243-IPX	224	$29.90	1W-1/4-INS	207	$59.50	206007-PKR	343	$291.30	227-054-SCR	205	$9.90
196252-IPX	224	$19.10	1W-2-1/8-INS	207	$169.60	20601-ECO	690	$24.60	227-150-SCR	205	$3.60
196278-IPX	225	$6.80	1W-2-5/8-INS	207	$239.50	208-F-SP-ALL	850	$91.10	227-152-SCR	205	$2.20
196282-IPX	225	$6.80	1W-3-1/8-INS	207	$290.20	2091-WMJ	778	$275.10	227-154-SCR	205	$2.50
196284-IPX	225	$13.20	1W-3-5/8-INS	207	$317.00	20C1-HUB	754	$8.00	227-180-SCR	205	$3.40

PART #	PG	LIST
227-182-SCR	205	$4.30
227-200-SCR	205	$1.30
227-202-SCR	205	$1.50
227-204-SCR	205	$3.60
227-210-SCR	205	$19.20
227-212-SCR	205	$41.30
22751-DYN	728-729	$8.30
22752-DYN	728-729	$10.10
22983-RIT	864	$295.00
22984-RIT	864	$330.00
22985-RIT	864	$346.00
22986-RIT	864	$382.00
22988-RIT	864	$478.00
2299-DSS	914-915	$13.90
22EH5C2-R1021E-SPO	299-300	$1,848.00
23218-NFL	789	$71.00
233-292-125V-MAR	738	$22.20
233-292-250V-MAR	738	$53.00
233-FLU	909	$1,754.00
2351-20-MIL	822	$197.10
2352-20-MIL	822	$218.60
2361-20-MIL	822	$388.00
2362-20-MIL	822	$242.10
2363-20-MIL	822	$324.00
2375CS-PIC	755	$45.70
2375N-15-PIC	755	$41.40
24233-JBI	855	$470.00
2471-21-MIL	844	$790.00
2471CS-PIC	755	$38.40
2475CS-PIC	755	$46.60
2475N-15-PIC	755	$41.50
24A01G-3-EME	680	$316.00
24A05E-1-EME	680	$277.10
24A34-21-EME	684	$47.80
24A34-22-EME	684	$47.80
24A34-23-EME	684	$47.80
24A34-24-EME	684	$47.80
24A34-25-EME	684	$47.80
24A34-26-EME	684	$68.00
24A34-27-EME	684	$71.80
24A34-28-EME	684	$74.60
24A34-29-EME	684	$47.80
24A34-37-EME	684	$69.70
24DT-L4F1-ALL	616	$372.00
25-30-125V-MAR	738	$23.50
25-30-250V-MAR	738	$28.80
25-30-330V-MAR	738	$32.30
25002-RIT	864	$116.60
25202-RIT	864	$120.30
25225-JBI	854	$557.00
25602-RIT	864	$120.30
2567-15-PIC	755	$48.70
25882-HCC	782	$46.70
25890002-SWC	758	$270.80
2593-AXT	824	$22.80
25980-RIT	864	$350.00
25983-RIT	864	$463.00
25984-RIT	864	$498.00
25985-RIT	864	$533.00
25986-RIT	864	$571.00
26002-RIT	864	$167.90
26026G-HON	665	$138.00
26225-JBI	854	$614.00
26225L-JBI	854	$729.00
268-CPD	891	$25.20
26EH5C2-R1021E-SPO	299-300	$1,904.00
270-324-125V-MAR	738	$23.50
270-324-250V-MAR	738	$59.70
270-324-330V-MAR	738	$62.30
270117-REZ	744	$664.00
27236-RIT		$89.50
27260-RIT		$141.80
27272-RIT		$151.30
2735-20-MIL	822	$225.40
27436-RIT	864	$211.60
27460-RIT	864	$225.20
27472-RIT	864	$232.60
27518-HON	665	$62.80
275FS-ALL	848	$315.00
2775BP-PIC	755	$5.60
28754-HCC	782	$67.80
289/FVF-FLU	909	$3,626.00
28R-1/2-UBS	201	$9.80
28R-3/8-UBS	201	$7.80
29435-JBI	903	$202.30
29436-JBI	903	$202.30
2AC/90-1000VC-FLU	908	$140.60
2BK55H-BPT	729	$183.60
2BK57H-BPT	729	$186.70
2BK60H-BPT	729	$190.90
2BK62H-BPT	729	$193.40
2BK65H-BPT	729	$208.60
2BK67H-BPT	729	$212.20
2BK70H-BPT	729	$218.00
2BK80H-BPT	729	$253.10
2DA3R89KE-TFC-800-CPD	75	$14,208.00
2DA3R89KE-TFD-800-CPD	75	$14,208.00
2DA3R89KE-TFE-800-CPD	75	$14,208.00
2DC3R53KE-TFC-800-CPD	75	$13,361.00
2DC3R53KE-TFE-800-CPD	75	$13,361.00
2DD3R63KE-TFC-800-CPD	75	$13,512.00
2DD3R63KE-TFE-800-CPD	75	$13,512.00
2DL3R78KE-TFC-800-CPD	75	$13,603.00
2DL3R78KE-TFE-800-CPD	75	$13,603.00
2VP42-7/8-BPT	728	$264.60
2VP56-1-1/8-BPT	728	$359.00
2VP60-1-1/8-BPT	728	$458.00
2VP60-1-3/8-BPT	728	$458.00
2VP68-1-3/8-BPT	728	$508.00
2VP75-1-3/8-BPT	728	$771.00
3/16-SEISMIC-KIT-ASE	203	$218.40
3/4-25-GALV-DAH	200	$15.20
3/4-3-HOLE-EME	723	$34.30
3/4W-1-1/8-INS	207	$59.80
3/4W-1-3/8-INS	207	$68.30
3/4W-1-5/8-INS	207	$90.70
3/4W-1/2-INS	207	$37.60
3/4W-1/4-INS	207	$31.80
3/4W-2-1/8-INS	207	$110.20
3/4W-2-5/8-INS	207	$139.30
3/4W-3-1/8-INS	207	$159.20
3/4W-3-5/8-INS	207	$193.00
3/4W-3/4-INS	207	$44.90
3/4W-3/8-INS	207	$34.60
3/4W-36-48-INS	207	$210.00
3/4W-4-1/8-INS	207	$207.90
3/4W-48-50FT-INS	207	$3,499.00
3/4W-5/8-INS	207	$41.00
3/4W-7/8-INS	207	$48.90
3/8-3-HOLE-EME	723	$29.20
3/8-3FT-PLTD-SCR	202	$6.30
3/8W-1-1/8-INS	207	$23.50
3/8W-1-3/8-INS	207	$26.70
3/8W-1-5/8-INS	207	$33.00
3/8W-1/2-INS	207	$16.20
3/8W-2-1/8-INS	207	$39.30
3/8W-2-5/8-INS	207	$59.30
3/8W-3-1/8-INS	207	$72.80
3/8W-3/4-INS	207	$19.70
3/8W-3/8-INS	207	$15.10
3/8W-36-48-INS	207	$132.10
3/8W-5/8-INS	207	$18.60
3/8W-7/8-INS	207	$20.70
30-059-IDE	757	$66.30
30-073J-IDE	757	$102.50
30-074J-IDE	757	$76.40
30-0S-SUP	776	$153.30
30-107J-IDE	757	$49.70
30-1161-IDE	757	$84.60
30-1162-IDE	757	$82.90
30-1163-IDE	757	$82.90
30-176J-IDE	757	$110.30
30-207-IDE	757	$38.50
30-2088-IDE	757	$207.40
30-36-125V-MAR	738	$23.50
30-36-250V-MAR	738	$28.80
30-36-330V-MAR	738	$34.70
30-3627-IDE	757	$29.60
30-3628-IDE	757	$33.60
30-3629-IDE	757	$38.50
300-360-125V-MAR	738	$29.80
3004145-GES	555	$635.00
3005CR-KLE	828	$87.30
3006-DSS	914-915	$107.70
301-3/8-UBS	201	$7.60
3012-235-CBS	348	$306.00
3020-150-CBS	348	$300.00
30536-HCC	804	$17.00
30537-HCC	773,785	$38.20
314.02.90-PPF	209	$25.80
314.03.T-PPF	209	$71.50
314.04.90-PPF	209	$25.80
314.06.90-PPF	209	$25.80
31502-91-PIC	756	$127.30
31803-91-PIC	756	$181.00
3212-ALL	360	$1,065.00
3214-200-CBS	348	$350.00
3215-450-CBS	348	$385.00
3220-200-CBS	348	$392.00
32288-KLE	828	$161.40
324-388-125V-MAR	738	$24.10
325-FLU	907	$1,403.00
32527-KLE	834	$67.70
32535-KLE	834	$105.10
325B-TBC	210	$16.60
325W-TBC	210	$16.60
32613-KLE	834	$48.80
32614-KLE	834	$47.90
3307-ALL	360	$605.00
3308-ALL	360	$815.00
3309-ALL	360	$923.00
3310-ALL	360	$1,103.00
3377-ALL	360	$1,261.00
3378-ALL	360	$1,367.00
3379-ALL	360	$1,581.00
340-408-125V-MAR	738	$31.70
3466-1E-PIC	808	$6.10
3466-3E-PIC	808	$6.10
3466-4E-PIC	808	$6.10
3466-5E-PIC	808	$6.10
3466-6E-PIC	808	$6.10
3466-7E-PIC	808	$6.10
34E24C2-R1021E-SPO	299-300	$2,643.00
36-43-250V-MAR	738	$28.80
36-43-330V-MAR	738	$36.90

PART #	PG	LIST
361110-01-BIT	726	$28.50
364-FHA-10-ALL	846	$215.40
364-FHA-12-ALL	846	$238.70
364-FHB-04-ALL	846	$133.60
364-FHB-06-ALL	846	$138.30
364-FHB-08-ALL	846	$170.30
3642-ALL	351	$5,264.00
3643-ALL	351	$6,398.00
3670-ALL	351	$522.00
36782-HCC	804	$72.50
367FH-ALL	846	$62.30
3680-ALL	351	$404.00
368FH-ALL	846	$74.40
36C03-258-EME	685	$454.00
36C84-912-EME	685	$901.00
36C84-926-EME	685	$914.00
36C94-906-EME	685	$898.00
36H32-423-EME	685	$587.00
3700-ALL	351	$883.00
3700-ALUMINUM-KAS	787	$22.60
3700-BLACK-KAS	787	$22.60
3700-CLEAR-KAS	787	$22.60
3700-WHITE-KAS	787	$22.60
3701-ALL	351	$387.00
3702-ALL	351	$461.00
3703-ALL	351	$462.00
3704-ALL	351	$1,446.00
3705-10-100-FEL	772	$7.60
3706-ALL	351	$1,102.00
370FHC-ALL	846	$139.10
373-FLU	907	$1,119.00
3734-ALL	710	$651.00
3738-ALL	351	$613.00
3743-ALL	351	$1,437.00
374FC-FLU	907	$1,771.00
375FC-FLU	907	$1,938.00
375FS-ALL	848	$264.60
376FC-FLU	907	$2,205.00
378-440-125V-MAR	738	$27.70
38-2205-01-EME	726	$85.80
38-2590-01-EME	727	$309.00
3810-EXA	772	$17.50
3816-ALL	351	$389.00
3817-ALL	351	$468.00
3826-ALL	351	$815.00
3831-ALL	351	$853.00
3838-ALL	351	$4,542.00
3839-ALL	351	$2,072.00
38621-HCC	781	$23.60
38635-HCC	782	$52.70
38637-HCC	781	$23.40
39156-HCC	784	$41.90
399021321040-RLS	241	$1,102.00
399021321060-RLS	241	$1,102.00
399021321080-RLS	241	$1,102.00
399021321100-RLS	241	$1,102.00
399021321120-RLS	241	$1,102.00
399021321140-RLS	241	$1,152.00
399021321180-RLS	241	$1,152.00
399021321220-RLS	241	$1,152.00
3ABA-031E-TAC-800-CPD	69	$11,168.00
3ABB-032E-CAB-800-CPD	69	$11,168.00
3AJA-0210-TAC-800-CPD	67	$11,277.00
3DA3R10ME-TFC-800-CPD	75	$15,023.00
3DA3R10ME-TFD-800-CPD	75	$15,023.00
3DA3R10ME-TFE-800-CPD	75	$15,023.00
3DB3R12ME-TFC-800-CPD	75	$15,960.00
3DB3R12ME-TFD-800-CPD	75	$15,960.00
3DB3R12ME-TFE-800-CPD	75	$15,960.00
3DF3R15ME-TFC-800-CPD	75	$17,857.00
3DS3R17ME-TFC-800-CPD	75	$17,440.00
3DS3R17ME-TFE-800-CPD	75	$17,440.00
3F01-110-EME	682	$22.30
3F01-120-EME	682	$21.70
3F01-130-EME	682	$21.80
3F01-140-EME	682	$21.40
3F01-150-EME	682	$21.10
3F01-160-EME	682	$21.90
3F01-180-EME	682	$22.10
3F05-1-EME	684	$59.20
3F05-2-EME	684	$57.00
3L01-120-EME	682	$21.40
3L01-130-EME	682	$21.20
3L01-140-EME	682	$21.80
3L01-150-EME	682	$21.40
3L01-170-EME	682	$21.20
3L01-180-EME	682	$21.50
3L01-190-EME	682	$21.60
3L01-200-EME	682	$21.50
3L01-230-EME	682	$22.00
3L01-250-EME	682	$21.60
3L01-300-EME	682	$22.20
3L01-350-EME	682	$21.20
3L02-160-EME	682	$35.60
3L02-170-EME	682	$34.70
3L02-180-EME	682	$35.50
3L02-190-EME	682	$35.20
3L02-200-EME	682	$35.00
3L03-140-EME	682	$31.80
3L03-190-EME	682	$31.80
3L05-1-EME	684	$58.40
3L05-2-EME	684	$56.70
3L05-3-EME	684	$56.30
3L09-10-EME	684	$46.70
3L09-11-EME	684	$46.90
3L09-12-EME	684	$46.70
3L09-13-EME	684	$44.90
3L09-14-EME	684	$47.90
3L09-3-EME	684	$46.60
3L09-4-EME	684	$46.70
3L09-5-EME	684	$46.40
3L09-6-EME	684	$46.40
3L09-7-EME	684	$45.30
3L09-8-EME	684	$46.00
3L09-9-EME	684	$46.20
3L180-BPT	730	$20.10
3L190-BPT	730	$20.10
3L200-BPT	730	$20.10
3L210-BPT	730	$20.10
3L220-BPT	730	$20.10
3L230-BPT	730	$22.40
3L240-BPT	730	$20.10
3L250-BPT	730	$22.40
3L260-BPT	730	$26.20
3L270-BPT	730	$26.60
3L280-BPT	730	$27.40
3L290-BPT	730	$27.90
3L300-BPT	730	$28.30
3L310-BPT	730	$28.50
3L320-BPT	730	$28.90
3L330-BPT	730	$42.30
3RA2-0310-CAB-800-CPD	66	$12,291.00
3RAA-031E-TAC-800-CPD	68	$11,458.00
3W1-SUP	741	$80.20
3W2-SUP	741	$103.80
400-480-125V-MAR	738	$30.20
4005MK-CPD	901	$514.00
4011F-MAR		$92.00
4011M-MAR		$107.90
402LA6063884-KAS	771	$355.00
402SD8084490-KAS	771	$543.00
4031F-MAR		$76.00
4031M-MAR		$121.70
4032F-MAR		$111.30
4036-2-ALL	727	$89.00
40465-HCC	787	$90.00
4050-01-CAL	867	$140.40
4050-02-CAL	867	$458.00
4050-05-CAL	867	$166.10
4050-06-CAL	867	$200.20
4050-08-CAL	867	$215.50
4050-11-CAL	867	$219.90
4050-12-CAL	867	$1,191.00
4050-15-CAL	867	$122.60
4051-99-CAL	867	$58.20
406-3/8-UBS	201	$6.60
4084-03-CAL	803	$88.70
4086-03-CAL	806	$82.60
41-1-1/2-UBS	200	$3.10
41-1-UBS	200	$3.10
41-1/2-UBS	200	$5.20
41-2-1/2-UBS	200	$8.30
41-2-UBS	200	$3.90
41-3-UBS	200	$8.90
41-3/4-UBS	200	$3.10
41-4-UBS	200	$9.60
41-5-UBS	200	$22.50
41-6-UBS	200	$28.20
4120-08-CAL	792	$86.40
41212-RIT	856	$289.20
4127-75-CAL		$32.50
41312-RIT	856	$262.60
4133-08-CAL	792	$110.50
4135-06-CAL	792	$303.00
4135-2-ALL	727	$162.00
4136-2-ALL	727	$81.60
4137-2-ALL	727	$64.60
4143-06-CAL	792	$317.00
4147-2-ALL	727	$122.00
4148-08-CAL	793	$260.90
4148-2-ALL	727	$122.00
4148-32-CAL	793	$107.70
4165-08-CAL	788	$98.10
4165-24-CAL	788	$30.80
4167-05-CAL	796	$381.00
4167-08-CAL	796	$83.50
4168-08-CAL	793	$78.30
4171-75-CAL	793	$39.00
41712-RIT	856	$257.10
4173-04-CAL	798	$88.50
4173-06-CAL	798	$103.90
4178-05-CAL	792	$228.20
4178-08-CAL	792	$84.20
4182-08-CAL	800	$110.00
4182-24-CAL	800	$37.70
4182-53-CAL	800	$19.60
4183-08-CAL	800	$153.50
4183-24-CAL	800	$56.10
4184-08-CAL	800	$121.70
4184-24-CAL	800	$57.30
4184-53-CAL	800	$21.30
4185-75-CAL	789	$63.70
4186-08-CAL	793	$93.90
4186-24-CAL	793	$49.10

PART #	PG	LIST	PART #	PG	LIST	PART #	PG	LIST	PART #	PG	LIST
4188-02-CAL	798	$3,494.00	4300-52-CAL	799	$76.60	48-00-5027-MIL	839	$78.20	48-20-7604-MIL	841	$57.50
4188-05-CAL	798	$350.00	4300-89-CAL	799	$110.40	48-00-5035-MIL	839	$45.70	48-20-9016-MIL	841	$10.20
4188-07-CAL	798	$71.80	4301-02-CAL	866	$90.10	48-00-5036-MIL	839	$59.80	48-20-9021-MIL	841	$12.70
4189-05-CAL	798	$299.90	4301-05-CAL	866	$95.60	48-00-5037-MIL	839	$67.70	48-20-9030-MIL	841	$17.90
4190-02-CAL	798	$81.50	43014-MAR	745	$152.40	48-00-5093-MIL	839	$49.10	48-20-9031-MIL	841	$31.20
4190-08-CAL	791	$93.90	4303-07-CAL	865	$109.10	48-00-5182-MIL	839	$38.30	48-22-0012-MIL	842	$37.00
4191-08-CAL	791	$87.50	4304-07-CAL	865	$109.10	48-00-5184-MIL	839	$38.30	48-22-0050-MIL	842	$89.80
42-1-1/2-UBS	200	$7.80	4305-07-CAL	865	$108.90	48-00-5186-MIL	839	$38.30	48-22-0104-MIL	842	$27.60
42-1-1/4-UBS	200	$6.80	4308-07-CAL	865	$223.90	48-00-5187-MIL	839	$46.90	48-22-0218-MIL	842	$70.20
42-2-1/2-UBS	200	$16.00	4310-07-CAL	865	$246.20	48-00-5188-MIL	839	$46.90	48-22-0316-MIL	833	$53.30
42-2-UBS	200	$11.70	4311-07-CAL	865	$273.90	48-00-5782-MIL	839	$52.50	48-22-0317-MIL	833	$53.30
42-3-UBS	200	$20.20	4314-46-CAL	865	$415.00	48-00-5784-MIL	839	$52.50	48-22-0325-MIL	833	$62.90
42-3/4-UBS	200	$6.40	4314-66-CAL	865	$421.00	48-00-5787-MIL	839	$69.70	48-22-0326-MIL	833	$62.90
42-4-UBS	200	$22.40	4316-46-CAL	865	$466.00	48-00-5788-MIL	839	$69.70	48-22-1901-MIL	829	$30.80
4216-27-CAL	801	$52.40	4320-W8-CAL	866	$63.40	48-03-3545-MIL	840	$113.30	48-22-2132-MIL	834	$47.10
4216-92-CAL	801	$47.40	4336-1-ALL	727	$44.10	48-03-3551-MIL	840	$129.30	48-22-2322-MIL	834	$61.30
4217-W3-CAL	801	$86.80	4340-08-CAL	797	$338.00	48-03-3555-MIL	840	$113.30	48-22-2761-MIL	829,834	$34.00
4218-12-CAL	801	$72.50	4346-1-ALL	727	$52.80	48-03-3561-MIL	840	$129.30	48-22-3079-MIL	829	$94.30
4218-W3-CAL	801	$65.30	4364-88-CAL	796	$611.00	48-03-4405-MIL	839	$54.70	48-22-4204-MIL	829,844	$72.30
425B-TBC	210	$17.90	4371-32-CAL	821	$76.20	48-03-4410-MIL	839	$56.40	48-22-4250-MIL	844	$48.10
425W-TBC	210	$17.90	4371-36-CAL	821	$48.50	48-09-5055-MIL	840	$36.40	48-22-4251-MIL	844	$77.70
4290-75-CAL	793	$55.30	4371-88-CAL		$62.80	48-13-5750-MIL	841	$75.20	48-22-4252-MIL	844	$177.50
4291-05-CAL	792	$225.60	4372-24-CAL	793	$73.90	48-13-5870-MIL	841	$84.70	48-22-4253-MIL	845	$290.10
4291-18-CAL	792	$34.00	4383-07-CAL	874	$119.00	48-13-6000-MIL	841	$91.20	48-22-4255-MIL	850	$27.40
4296-50-CAL	803	$76.40	4383-24-CAL	874	$50.20	48-13-6120-MIL	841	$116.90	48-22-4256-MIL	844	$33.10
4296-51-CAL	803	$76.40	4383-34-CAL	874	$32.20	48-13-6250-MIL	841	$135.80	48-22-4500-MIL	829	$49.40
42BF35A-F-MAR	688	$113.20	44-102-IDE	756	$48.60	48-13-7125-MIL	841	$29.30	48-22-4510-MIL	829	$40.20
42BF35A-G-MAR	688	$113.20	44002-TMM	552	$48.80	48-13-7137-MIL	841	$33.80	48-22-4520-MIL	829	$40.20
42BF35A-J-MAR	688	$113.20	44005-KLE	552	$148.90	48-13-7237-MIL	841	$37.70	48-22-4521-MIL	829	$71.70
42CF35A-F-MAR	688	$121.80	4410181-NFL	805	$20.10	48-20-5005-MIL	840	$132.30	48-22-4530-MIL	829	$40.20
42CF35A-G-MAR	688	$121.80	45200-KLE	918	$25.80	48-20-5010-MIL	840	$143.10	48-22-5107-MIL	833	$107.30
42CF35A-J-MAR	688	$121.80	45300-SND	824	$122.50	48-20-5015-MIL	840	$242.30	48-22-6100-MIL	829	$81.50
42DF35A-F-MAR	688	$352.00	45EG10A-FA-MAR	688	$56.40	48-20-5020-MIL	840	$180.10	48-22-6210-MIL	829	$59.70
42DF35A-G-MAR	688	$352.00	45EG10A-GA-MAR	688	$58.00	48-20-5025-MIL	840	$196.40	48-22-6310-MIL	829	$48.60
42DF35A-J-MAR	688	$352.00	45EG10A-JA-MAR	688	$56.40	48-20-5030-MIL	840	$221.00	48-22-7210-MIL	830	$126.60
42EF35A-F-MAR	688	$369.00	45EG20A-F-MAR	688	$54.80	48-20-5035-MIL	840	$338.00	48-22-7212-MIL	830	$141.00
42EF35A-G-MAR	688	$369.00	45EG20A-G-MAR	688	$54.80	48-20-5040-MIL	840	$234.70	48-22-7214-MIL	830	$156.50
42EF35A-J-MAR	688	$369.00	45EG20A-J-MAR	688	$54.80	48-20-5045-MIL	840	$322.00	48-22-7218-MIL	830	$204.50
42FE35A-F-MAR	688	$732.00	460-552-125V-MAR	738	$30.00	48-20-5050-MIL	840	$388.00	48-22-7224-MIL	830	$317.00
42FE35A-J-MAR	688	$732.00	4603-0-CAL	796	$773.00	48-20-5055-MIL	840	$580.00	48-22-8200-MIL	826	$306.00
42GE35A-F-MAR	688	$1,009.00	4604-0-CAL	796	$209.90	48-20-7065-MIL	841	$72.10	48-22-8201-MIL	826	$441.00
42GE35A-G-MAR	688	$1,003.00	462000HAM-DSS	914	$43.20	48-20-7072-MIL	841	$99.90	48-22-8426-MIL	829	$390.00
42GE35A-J-MAR	688	$1,009.00	462570-ALL	786	$41.80	48-20-7410-MIL	841	$12.70	48-22-8430-MIL	829	$160.70
43-56-125V-MAR	738	$21.60	47044-NFL	790	$33.20	48-20-7411-MIL	841	$13.50	48-22-8435-MIL	829	$111.10
43-56-250V-MAR	738	$28.80	4768-W3-CAL	795	$25.50	48-20-7430-MIL	841	$12.30	48-32-4411-MIL	839	$4.30
43-56-330V-MAR	738	$40.70	4770-0-CAL	795	$149.50	48-20-7431-MIL	841	$13.50	48-32-4412-MIL	839	$4.30
4300-09-CAL	799	$212.20	4772-0-CAL	795	$370.00	48-20-7441-MIL	841	$18.00	48-32-4413-MIL	839	$4.30
4300-10-CAL	799	$972.00	4774-0-CAL	795	$304.00	48-20-7451-MIL	841	$16.70	48-32-4421-MIL	839	$4.30
4300-11-CAL	799	$408.00	48-00-1600-MIL	839	$73.10	48-20-7454-MIL	841	$34.20	48-32-4422-MIL	839	$4.30
4300-15-CAL	799	$2,411.00	48-00-1630-MIL	839	$53.20	48-20-7471-MIL	841	$21.80	48-32-4444-MIL	839	$4.30
4300-30-CAL	799	$212.20	48-00-1640-MIL	839	$16.00	48-20-7474-MIL	841	$33.40	48-32-4462-MIL	839	$5.00
4300-50-CAL	799	$45.00	48-00-5021-MIL	839	$51.20	48-20-7490-MIL	841	$78.20	48-32-4463-MIL	839	$5.00
4300-51-CAL	799	$104.00	48-00-5026-MIL	839	$68.00	48-20-7602-MIL	841	$38.40	48-32-4471-MIL	839	$5.00

PART #	PG	LIST
48-32-4472-MIL	839	$5.00
48-32-4473-MIL	839	$5.00
48-32-4483-MIL	839	$5.00
48-32-4484-MIL	839	$5.00
48-32-4485-MIL	839	$5.00
48-32-4487-MIL	839	$5.00
48-32-4503-MIL	839	$16.30
48-32-4562-MIL	839	$7.10
48-32-4572-MIL	839	$7.10
48-32-4601-MIL	839	$10.70
48-32-4602-MIL	839	$21.70
48-32-4605-MIL	839	$10.70
48-32-4606-MIL	839	$21.70
48-32-4802-MIL	839	$11.30
48-32-4805-MIL	839	$11.30
48-32-5030-MIL	839	$8.40
48-32-5031-MIL	839	$11.00
48-55-3490-MIL		$71.70
48-89-2710-MIL	841	$4.70
48-89-2711-MIL	841	$4.80
48-89-2712-MIL	841	$4.90
48-89-2713-MIL	841	$4.90
48-89-2714-MIL	841	$5.00
48-89-2715-MIL	841	$3.20
48-89-2716-MIL	841	$3.40
48-89-2717-MIL	841	$3.40
48-89-2718-MIL	841	$3.90
48-89-2719-MIL	841	$4.30
48-89-2720-MIL	841	$4.70
48-89-2721-MIL	841	$5.00
48-89-2722-MIL	841	$5.30
48-89-2723-MIL	841	$6.30
48-89-2724-MIL	841	$7.10
48-89-2725-MIL	841	$7.60
48-89-2726-MIL	841	$7.80
48-89-2727-MIL	841	$8.70
48-89-2728-MIL	841	$9.80
48-89-2729-MIL	841	$10.80
48-89-2730-MIL	841	$10.80
48-89-2731-MIL	841	$17.20
48-89-2732-MIL	841	$17.50
48-89-2733-MIL	841	$18.70
48-89-2734-MIL	841	$20.10
48-89-2735-MIL	841	$21.20
48-89-2736-MIL	841	$24.00
48-89-2737-MIL	841	$24.80
48-89-2738-MIL	841	$25.40
48-89-2803-MIL	841	$69.20
48-89-9201-MIL	841	$77.70
48-89-9202-MIL	841	$94.90
48-89-9203-MIL	841	$121.10
48-89-9204-MIL	841	$122.00
48-89-9205-MIL	841	$176.30
48-89-9206-MIL	841	$88.00
48-89-9207-MIL	841	$148.50
48-89-9208-MIL	841	$160.70
48-89-9209-MIL	841	$142.40
48-89-9211-MIL	841	$212.50
48-89-9212-MIL	841	$166.10
48-89-9221-MIL	841	$311.00
48-89-9223-MIL	841	$457.00
4814-0-CAL	869	$382.00
4815-0-CAL	868	$1,112.00
481A-KAS	770	$48.10
481B-KAS	770	$65.60
481C-KAS	770	$45.40
4820-08-CAL	792	$113.80
4823-08-CAL	792	$121.10
4832-C9-CAL	800	$28.20
4834-08-CAL	795	$355.00
4834-C7-CAL	795	$41.00
4841-08-CAL	795	$276.60
4841-AB-CAL	795	$45.70
4845-K8-CAL	796	$104.10
4845-PB-CAL	796	$375.00
4891-08-CAL	792	$82.30
489A-KAS		$110.40
49-22-3310-MIL	839	$76.70
49-22-3329-MIL	839	$104.00
49-22-4175-MIL	840	$415.00
49-24-0146-MIL	822	$153.60
49-56-0023-MIL	840	$21.40
49-56-0032-MIL	840	$21.40
49-56-0043-MIL	840	$21.60
49-56-0052-MIL	840	$21.60
49-56-0062-MIL	840	$21.60
49-56-0072-MIL	840	$22.70
49-56-0082-MIL	840	$22.70
49-56-0092-MIL	840	$22.70
49-56-0102-MIL	840	$28.60
49-56-0117-MIL	840	$28.60
49-56-0127-MIL	840	$34.10
49-56-0132-MIL	840	$34.10
49-56-0142-MIL	840	$34.10
49-56-0147-MIL	840	$37.60
49-56-0158-MIL	840	$37.60
49-56-0163-MIL	840	$37.60
49-56-0173-MIL	840	$40.00
49-56-0177-MIL	840	$40.00
49-56-0183-MIL	840	$40.00
49-56-0193-MIL	840	$42.80
49-56-0197-MIL	840	$47.10
49-56-0213-MIL	840	$59.10
49-56-0217-MIL	840	$63.20
49-56-0223-MIL	840	$83.60
49-56-0233-MIL	840	$116.00
49-56-0237-MIL	840	$128.80
49-56-0243-MIL	840	$143.00
49-56-0253-MIL	840	$147.30
49-56-7010-MIL	840	$25.20
49-56-8000-MIL	840	$10.30
49-56-8010-MIL	840	$10.30
49-56-9210-MIL	840	$91.80
49-56-9220-MIL	840	$108.80
49-56-9230-MIL	840	$124.90
49-56-9240-MIL	840	$147.50
49-56-9265-MIL	840	$233.30
49-56-9270-MIL	840	$245.50
49-56-9275-MIL	840	$310.00
49-56-9280-MIL	840	$396.00
49-56-9305-MIL	840	$58.60
49-66-4502-MIL	839	$7.40
49-66-4503-MIL	839	$7.80
49-66-4505-MIL	839	$8.70
49-66-4506-MIL	839	$13.40
49-66-4522-MIL	839	$21.80
49-66-4523-MIL	839	$22.60
49-66-4525-MIL	839	$25.70
49-66-4526-MIL	839	$38.90
49-66-4532-MIL	839	$8.70
49-66-4533-MIL	839	$9.50
49-66-4535-MIL	839	$9.60
49-66-4536-MIL	839	$16.20
49-66-4561-MIL	839	$23.60
49-66-4562-MIL	839	$37.00
4900-10-CAL	377	$2,182.00
4900-20-CAL	377	$1,402.00
49001-RIT	860	$77.50
49002-RIT	860	$77.50
49010-RIT	860	$19.60
49015-RIT	860	$68.10
49016-RIT	860	$68.10
49035-RIT	860	$68.10
49036-RIT	860	$68.10
49051-RIT	860	$68.10
49052-RIT	860	$68.10
49063-RIT	860	$86.40
49064-RIT	860	$86.40
49067-RIT	860	$149.70
49068-RIT	860	$149.70
49090-RIT	860	$72.60
49100-RIT	860	$24.30
49105-RIT	860	$102.70
49137-RIT	860	$90.30
49138-RIT	860	$90.30
49151-RIT	860	$90.30
49152-RIT	860	$90.30
49190-RIT	860	$78.90
49512-RIT	860	$228.00
4992-NGN	845	$765.00
49931-DSS	918	$83.40
49932-RIT	856	$651.00
49936-DSS	918	$83.40
49ACR0-MAR	689	$61.50
49ACR6-MAR	689	$108.00
49ACR7-MAR	689	$170.60
49ACR8-MAR	689	$170.60
49ACRC-MAR	689	$61.50
49D36098003-MAR	689	$124.60
4DA3R18ME-TSE-800-CPD		$19,187.00
4DA3R18ME-TSK-800-CPD	75	$19,187.00
4DH3R22ME-TSE-800-CPD		$22,994.00
4DH3R22ME-TSK-800-CPD	75	$22,994.00
4DHDF63KE-TSE-800-CPD	75	$23,638.00
4DJ3R28ME-TSE-800-CPD	75	$25,440.00
4DJ3R28ME-TSK-800-CPD	75	$25,440.00
4MTLS11ME-FSD-C89-CPD	64	$26,997.00
4MTLS15ME-FSD-C89-CPD	64	$32,069.00
4MTLS82KE-FSD-C89-CPD	64	$25,530.00
4RA3-1000-TSE-800-CPD		$19,681.00
4RE2-2000-TSE-800-CPD		$21,219.00
4RR1-3000-TSE-800-CPD		$29,371.00
4RR2-3000-TSE-800-CPD		$29,371.00
4VEA006-ALL	725	$31.30
4VEA007-RBM	725	$28.20
5/16-2-HOLE-EME	724	$29.30
5/16-3-HOLE-EME	723	$28.90
5/8-10FT-PLTD-UBS	202	$36.10
5/8-3-HOLE-EME	723	$34.00
500-FC-SP-ALL	847	$416.00
50012-K-CPD	901	$453.00
50014-K-CPD	901	$812.00
50021579-001-HON		$226.20
500286-FEC	560	$358.00
500386-FEC	560	$374.00
50053060-001-HON		$103.30
501020-FEC	560	$503.00
501086-FEC	560	$417.00
50172F-NFL	786	$26.80
50176F-NFL	786	$23.60
50208-K-CPD	901	$462.00
50209-K-CPD	901	$418.00
502286-FEC	560	$504.00
50306-K-CPD	901	$348.00

PART #	PG	LIST	PART #	PG	LIST	PART #	PG	LIST	PART #	PG	LIST
50318-K-CPD	901	$450.00	550521-FEC	558	$382.00	589002-FEC	561	$654.00	612-40-3/8W-LIN	549	$770.00
503186-FEC	560	$782.00	550532-FEC	558	$401.00	590-708-125V-MAR	738	$37.20	6120-14-PIC	756	$23.40
5031M-MAR		$149.50	551320-FEC	558	$841.00	59475-HCC	787	$56.60	61201-CAL	789	$117.00
503203-FEC	560	$846.00	553101-FEC	557	$364.00	59575-HCC	787	$52.30	61203-CAL	789	$25.90
5032M-HRP		$2,426.00	553201-FEC	557	$380.00	59675-HCC	787	$56.70	6121-14-PIC	756	$34.20
50332-K-CPD	901	$360.00	553211-FEC	557	$404.00	599061-FEC	559	$42.70	61212-ALL	726	$75.40
50338-K-CPD	901	$332.00	553240-FEC	557	$892.00	599062-FEC	559	$114.70	6122-14-PIC	756	$37.40
503603-FEC	560	$770.00	553245-FEC	557	$980.00	599063-FEC	559	$77.40	6123-14-PIC	756	$18.50
504186-FEC	560	$1,021.00	554158-14-KLE		$236.10	599064-FEC	559	$74.60	6124-14-PIC	756	$22.10
5041C-MAR		$204.30	5541610-14-KLE		$298.80	599065-FEC	559	$23.30	61301-CAL	797	$485.00
504203-FEC	560	$1,083.00	55419SP-14-KLE		$174.20	599085-FEC	559	$29.70	614-25-3/8W-LIN	549	$660.00
506055-FEC	562	$1,054.00	554201101-FEC	557	$213.50	59MAX-PLUS-FLU	895	$434.00	61400-AIR	726	$49.90
506158-FEC	563	$628.00	554202101-FEC	557	$193.70	60-1-650-L-BDG	916	$34.70	6142-20-CPD	887	$114.30
506171-FEC	563	$668.00	554415-FEC	557	$150.80	60-10-FAI	221	$0.70	6142-58-CPD	887	$154.40
506271-FEC	563	$596.00	5554PF-L-WTG	916	$45.00	60-12-FAI	221	$1.20	61610-AIR	726	$60.00
506274-FEC	563	$604.00	5555PF-L-WTG	916	$45.00	60-3-FAI	221	$0.20	61800-AIR	726	$63.10
50A55-843-EME	681	$431.00	555602-FEC	562	$504.00	60-4-FAI	221	$0.20	61920-ALL	726	$115.90
50E47-843-EME	681	$469.00	55L-RBM	716	$75.50	60-5-FAI	221	$0.20	62-10-FAI	221	$9.50
51252-HCC	805	$67.10	55S-RBM	716	$67.70	60-6-FAI	221	$0.30	62-12-FAI	221	$20.90
5140C-AIR	724	$55.00	56-72-125V-MAR	738	$22.10	60-8-FAI	221	$0.50	62-14-FAI	221	$23.90
518087-FEC	560	$363.00	56-72-250V-MAR	738	$21.60	601-10-KLE	834	$39.90	62-2-FAI	221	$2.70
52-2-FLU	897	$1,861.00	56-72-330V-MAR	738	$45.60	601-4-KLE	834	$29.90	62-3-FAI	221	$2.70
520-1/2PT-BT-INS	207	$25.00	561-FLU	895	$1,019.00	6010-SFO	873	$716.00	62-4-FAI	221	$2.90
520-1GAL-INS	207	$209.50	56403-KLE	828	$161.40	602-10-KLE	834	$67.70	62-5-FAI	221	$3.10
520-1PT-BT-INS	207	$38.20	566608-FEC	560	$274.50	602-3-KLE	834	$33.60	62-6-FAI	221	$4.10
520-1QT-INS	207	$60.50	580002-FEC	561	$774.00	602-4-KLE	834	$34.90	62-8-FAI	221	$7.00
520-BLV-1PT-BT-INS	207	$53.20	5802-ALL	356	$3,472.00	602-6-KLE	834	$44.90	62000-AIR	726	$68.40
52171K-HUB	754	$30.20	5803-ALL	356	$2,553.00	602-8-KLE	834	$57.40	62028000-TEM	367	$425.00
523086-FEC	560	$345.00	5804-ALL	356	$4,520.00	603-1-KLE	834	$27.60	62030000-TEM	367	$584.00
525-F-ALL	847	$254.70	580503-FEC	561	$894.00	603-10-KLE	834	$42.60	62037000-TEM	367	$278.60
525B-TBC	210	$19.10	580506-FEC	560	$880.00	603-3-KLE	834	$28.60	62047000-TEM	367	$370.00
525W-TBC	210	$19.10	5806-ALL	356	$3,300.00	603-4-KLE	834	$32.40	62051000-TEM	367	$498.00
526003-FEC	560	$417.00	580603-FEC	561	$1,108.00	6030MK-CPD	901	$90.60	62085000-TEM	367	$941.00
52C6-HUB	754	$8.70	581002-FEC	561	$949.00	6041C-MAR		$216.70	62086000-TEM	367	$1,680.00
5315-ALL	360	$604.00	581503-FEC	561	$1,011.00	60430-RIT	848	$703.00	62092802-TEM	367	$1,018.00
53151K-HUB	754	$30.10	581506-FEC	560	$1,194.00	605-4-KLE	834	$32.50	62200-AIR	726	$72.00
531C-L-S-KAS	767	$1,023.00	581604-FEC	561	$1,369.00	605-6-KLE	834	$35.00	62400-AIR	726	$76.60
533D-L-S-KAS	767	$271.80	581614-FEC	561	$1,495.00	605-8-KLE	834	$41.20	625B-TBC	210	$22.70
537-346-SCR	205	$37.40	582002-FEC	561	$1,118.00	606B-10D-CBS	350	$240.40	625W-TBC	210	$22.70
537-355-SCR	205	$65.40	582503-FEC	561	$1,223.00	61-10-FAI	221	$2.70	62MAX-PLUS-FLU	895	$715.00
537-356-SCR	205	$60.20	582506-FEC	560	$1,336.00	61-12-FAI	221	$4.30	630-1/4-KLE	835	$29.90
537-357-SCR	205	$104.00	582507-FEC	560	$1,292.00	61-4-FAI	221	$0.80	630-11/32-KLE	835	$28.60
538C-L-S-KAS	767	$366.00	582514-FEC	561	$1,405.00	61-5-FAI	221	$0.90	630-3/8-KLE	835	$29.90
54-2-B-FLU	897	$2,339.00	582604-FEC	561	$1,658.00	61-6-FAI	221	$0.90	630-5/16-KLE	835	$28.70
540-648-125V-MAR	738	$32.10	583-01-TAP	808	$16.10	61-8-FAI	221	$2.10	630-7/16-KLE	835	$32.30
540005-FEC	559	$124.70	583002-FEC	561	$1,683.00	610-50-3/8W-LIN	549	$785.00	630M-KLE	835	$69.80
540015-FEC	559	$134.40	58310-NFL	789	$36.00	61030-CAL	780	$33.60	631-KLE	835	$194.70
541005-FEC	559	$145.10	583503-FEC	561	$1,718.00	6115PK-PIC	756	$9.60	631M-KLE	835	$274.50
541015-FEC	559	$160.20	583603-FEC	561	$1,961.00	6116PK-PIC	756	$11.80	63600-ALL	726	$191.00
542005-FEC	559	$206.40	584504-FEC	561	$2,536.00	6117-14-PIC	756	$12.80	64-3-FAI	221	$8.30
545600-FEC	559	$273.60	584604-FEC	561	$2,795.00	6118-14-PIC	756	$13.70	64-4-FAI	221	$6.10
54C6-HUB	754	$6.00	587010-FEC	561	$4,806.00	6119-14-PIC	756	$13.70	64-5-FAI	221	$11.20
54C94-HUB	754	$12.30	588001-FEC	561	$415.00	612-25-3/8W-LIN	549	$509.00	64-6-FAI	221	$7.70

PART #	PG	LIST	PART #	PG	LIST	PART #	PG	LIST	PART #	PG	LIST
64-8-FAI	221	$14.50	68-4D-FAI	221	$6.30	70015-SIG	830	$217.60	7602-130-AIT	384	$439.00
646-1/2-KLE	835	$37.70	68-5A-FAI	221	$3.20	70067-MAS	846	$897.00	7602-132-AIT	384	$951.00
646-1/4-KLE	835	$29.80	68-5B-FAI	221	$3.40	70070-MAS	846	$708.00	7616BR-HON	665	$92.80
646-11/32-KLE	835	$30.10	68-6A-FAI	221	$3.80	70078-MAS	830	$259.70	770-3-EME	681	$141.10
646-3/16-KLE	835	$30.00	68-6B-FAI	221	$2.70	703-020-G1-INF	876	$176.50	7700-30M-NFL		$107.00
646-3/8-KLE	835	$32.40	68-6C-FAI	221	$3.60	705-202-G1-INF	876	$777.00	77930-RIT	869	$596.00
646-5/16-KLE	835	$30.10	68-6D-FAI	221	$4.90	705-600-G1-INF	876	$63.10	7825301XLG-DSP	918	$34.80
646-5/8-KLE	835	$51.10	68-6E-FAI	221	$16.70	70550-KLE	832	$55.90	7825376XLG-DSP	918	$26.50
646-7/16-KLE	835	$35.00	68-8B-FAI	221	$5.00	7070-PK-PIC	761	$64.40	78712-RIT	601	$103.10
646-9/16-KLE	835	$47.40	68-8C-FAI	221	$4.90	7075819-HRP	690	$187.80	78718-RIT	601	$94.00
646M-KLE	835	$79.90	68-8D-FAI	221	$6.80	708-850-125V-MAR	738	$52.90	78724-RIT	601	$102.60
647-KLE	835	$212.00	68-8E-FAI	221	$11.90	7086E-PIC	756	$231.00	78730-RIT	601	$116.70
647M-KLE	835	$299.30	6812-01-CPD	887	$162.80	70CSA220-SUP	776	$359.00	78736-RIT	601	$118.70
65-3-FAI	221	$13.40	68234-KLE	831	$52.40	710-202-G1-INF	858	$981.00	78748-RIT	601	$136.00
65-4-FAI	221	$5.20	68236-KLE	831	$56.10	711-202-G1-INF	876	$981.00	78760-RIT	601	$160.10
65-5-FAI	221	$8.80	68238-KLE	831	$71.10	7112-01-CPD	887	$152.00	78772-RIT	601	$177.80
65-6-FAI	221	$7.70	68309-KLE	831	$81.10	7118HNC-PIC	762	$30.20	78819-MAR	818	$96.80
65-8-FAI	221	$13.80	68310-KLE	831	$62.40	7119HNC-PIC	762	$30.60	78820-MAR	818	$99.50
6500-ALL	752	$75.10	68862-RIT	875	$886.00	7120HNC-PIC	762	$29.30	79040-HCC	807	$63.90
65001-ALL	852	$25.60	69-4A-FAI	221	$4.80	7121HNC-PIC	762	$30.00	801-31-PIC	762	$81.10
65002-ALL	852	$159.90	69-4B-FAI	221	$5.90	7122HNC-PIC	762	$30.80	8010C-B-PIC		$208.70
65003-ALL	852	$33.30	69-4C-FAI	221	$7.40	7124HNC-PIC	762	$33.80	8012C-B-PIC		$132.30
65004-ALL	852	$32.80	69-4D-FAI	221	$14.30	7126HNC-PIC	762	$45.90	8014C-B-PIC		$91.60
65006-ALL	852	$27.20	69-6A-FAI	221	$6.60	7128HNC-PIC	762	$56.60	8016C-BL-PIC		$65.10
65010-ALL	852	$84.90	69-6B-FAI	221	$6.20	7130HNC-PIC	762	$77.20	802-11-PIC	762	$175.20
65015-ALL	852	$85.80	69-6C-FAI	221	$7.40	714-202-G1-INF	870	$2,974.00	802B-4ST-CBS	345	$287.50
65145-ALL	852	$83.10	69-6D-FAI	221	$13.00	715-202-G1-INF	906	$926.00	802B-6-CBS	345	$287.50
65155-ALL	852	$83.10	69-8B-FAI	221	$10.60	72-88-250V-MAR	738	$26.10	802B-6ST-CBS	345	$287.50
65260-ALL	852	$78.50	69-8C-FAI	221	$9.80	72-88-330V-MAR	738	$32.60	802B-8-CBS	345	$287.50
65270-ALL	852	$78.50	69-8D-FAI	221	$7.90	721-610-G1-INF	876	$241.10	802B-8ST-CBS	345	$335.00
65300-ALL	852	$87.70	69075-RIT	858	$1,475.00	721-702-G1-INF	876	$269.10	803-31-PIC	762	$164.00
66-4B-FAI	221	$2.80	691-EXA	772	$29.80	72105-NFL	807	$47.00	80308-MAR	749	$446.00
66-6B-FAI	221	$3.70	69637-IMS	832	$96.50	724-202-G1-INF	876	$3,679.00	80340-PNT	788	$29.90
660-KLE	834	$32.50	69727-RIT	878	$93.20	7295-34-PIC	761	$9.40	80350-PNT	788	$34.90
660A-KAS	776	$416.00	69789-RIT	878	$623.00	7314PK-PIC	762	$25.80	80365-PNT	788	$35.40
661-KLE	834	$32.40	6DH3R35ME-TSE-800-CPD		$31,795.00	7315PK-PIC	762	$27.80	8038-NGN	845	$65.20
662-KLE	834	$32.40	6DH3R35ME-TSK-800-CPD	75	$31,795.00	7316PK-PIC	762	$28.60	80395-PNT	788	$35.20
663-KLE	834	$32.50	6DJ3R40ME-FSU-800-CPD		$36,322.00	7317PK-PIC	762	$41.20	803B-10ST-CBS	345	$324.00
666-KLE	834	$37.60	6DJ3R40ME-TSE-800-CPD	75	$35,243.00	7318PK-PIC	762	$45.00	804-31-PIC	762	$161.20
66640-REC	786	$37.90	6RB2-2000-TSK-800-CPD	65	$25,816.00	7319PK-PIC	762	$43.60	80400-PNT	788	$29.90
667-KLE	834	$36.40	6RK2-3500-TSE-800-CPD		$37,799.00	7321PK-PIC	762	$29.40	8041-00-RSW	696	$408.00
668-KLE	834	$26.10	6RN2-3000-TSK-800-CPD		$36,020.00	73834-ALL	851	$24.20	8041-20-RSW	696	$408.00
6750-ALL	752	$100.20	6RP2-3500-FSD-800-CPD		$25,204.00	73836-ALL	851	$23.70	8045-00-RSW	696	$386.00
68-10C-FAI	221	$7.90	700-100-P1-INF	874	$996.00	75-220-SUP	776	$373.00	8045-20-RSW	696	$386.00
68-10D-FAI	221	$7.30	7000427-DYN	203	$0.50	75-SUP	776	$373.00	8047-20-RSW	696	$395.00
68-10E-FAI	221	$14.00	7000627-DYN	203	$1.00	7507-10-FEL	772	$8.70	804A-14S-CBS	345	$335.00
68-12D-FAI	221	$11.90	70013-SIG	830	$110.70	7519-05-CAL	798	$863.00	804A-14ST-CBS	345	$637.00
68-12E-FAI	221	$13.80	70014-SIG	830	$141.10	7531F-MAR		$146.40	80AK-A-FLU	900	$160.20
68-14E-FAI	221	$14.50				7537-05-CAL	798	$806.00	80BK-A-FLU	900	$219.00
68-2A-FAI	221	$2.00				7541C-MAR		$307.00	80CK-M-FLU	900	$143.80
68-4A-FAI	221	$2.20				7541STC-MAR		$329.00	80PK-1-FLU	899	$205.90
68-4B-FAI	221	$2.70				75FFP100-NFL		$24.60	80PK-22-FLU	899	$464.00
68-4C-FAI	221	$3.30				75SCP100-NFL		$92.60	80PK-24-FLU	899	$549.00

PART #	PG	LIST
80PK-25-FLU	899	$549.00
80PK-26-FLU	899	$549.00
80PK-27-FLU	899	$1,406.00
80PK-3A-FLU	899	$719.00
80PK-8-FLU	900	$785.00
80PK-9-FLU	900	$343.00
80PK-EXT-FLU	900	$307.00
80TK-FLU	900	$687.00
81-3N-FAI	223	$8.30
81-4N-FAI	223	$4.50
81234-MAR	851	$23.10
8134C-B-PIC	751	$476.00
8134C-R-PIC	751	$476.00
8134C-W-PIC	751	$476.00
8141-00-RSW	696	$403.00
8141-20-RSW	696	$403.00
8143-00-RSW	696	$395.00
8143-20-RSW	696	$408.00
8145-00-RSW	696	$382.00
8145-20-RSW	696	$382.00
81736-RIT		$766.00
81748-RIT		$842.00
81860-RIT		$839.00
81988-PNT	788	$36.60
81989-PNT	788	$47.30
81991-PNT	788	$47.30
82325-HCC	804	$44.00
825B-TBC	210	$33.20
825W-TBC	210	$33.20
8265-S-NFL	786	$21.10
8277-NFL	786	$24.50
829-995-125V-MAR	738	$43.90
8365-HUB	754	$20.00
8367-HUB	754	$24.80
8371-HUB	754	$20.80
8375-HUB	754	$24.80
83930-REC	555	$479.00
846CSC-ALL	854	$946.00
87-01-250-SBA-KPX		$134.10
87-01-300-SBA-KPX		$185.70
87/5E2-FLU	909	$2,506.00
88-108-125V-MAR	738	$18.00
88-108-250V-MAR	738	$28.10
88-108-330V-MAR	738	$33.50
88403-ALL	752	$6.20
88405-ALL	752	$9.80
885C-31S-CBS	344	$5,112.00
8A05A-201-EME	680	$314.00
8D7B-SPO	297	$2,468.00
8D7C-SPO	297	$2,468.00
9000-WMI	821	$95.50
9005-DSS	914	$4.00
900MA-10S-CBS	345	$101.00
900MA-11S-CBS	345	$492.00
900MA-13S-CBS	345	$906.00
900MA-14S-CBS	345	$222.70
900MA-15S-CBS	345	$1,123.00
900MA-21S-CBS	345	$1,547.00
900MA-25S-CBS	345	$1,832.00
900MA-4S-CBS	345	$99.50
900MA-6S-CBS	345	$99.50
900MA-8S-CBS	345	$101.00
901654-SPO	322	$1,871.00
901655-SPO	322	$1,871.00
901656-SPO	322	$1,813.00
90293-ALL	745	$32.20
90294-ALL	745	$49.70
90340-ALL	745	$28.10
90341-ALL	745	$29.00
90342-ALL	745	$29.00
90343-MAR	745	$74.40
90344-MAR	745	$74.10
90345-MAR	745	$101.00
90346-MAR	745	$74.10
90348-MAR	745	$92.40
90380-ALL	745	$24.00
90382-MAR	745	$65.10
90384-ALL	745	$25.10
9040-35-PIC	808	$39.40
9040-FLU	902	$1,437.00
9045-00-RSW	697	$579.00
91002-WMI	834	$30.80
9145-00-RSW	697	$579.00
924-ALL	818	$20.80
924-TEM	367	$1,479.00
925-ALL	818	$20.70
925-TEM	367	$1,475.00
926-ALL	818	$16.70
927-ALL	818	$17.30
928-ALL	818	$31.20
928-TEM	367	$6,516.00
928R-TEM	367	$6,653.00
929-ALL	818	$31.70
93001-MAR	746	$13.30
930C-L-S-KAS	767	$576.00
930D-L-S-KAS	767	$580.00
931-ALL	818	$45.20
932-ALL	818	$23.20
934-ALL	818	$32.60
935-ALL	818	$45.90
93530-RIT	874	$5,895.00
93760-RIT	874	$2,482.00
93780-RIT	874	$2,754.00
93860-RIT	874	$645.00
93FB-ALL	847	$157.40
93S-04-ALL	849	$14.00
93S-05-ALL	849	$15.10
93S-06-ALL	849	$15.10
93S-08-ALL	849	$21.70
93S-10-ALL	849	$32.90
93S-12-ALL	849	$32.60
93S-14-ALL	849	$36.40
94S-SP-ALL	849	$50.90
95-61-190-SBA-KPX	203	$217.50
95-S-ALL	849	$45.60
952567-SPO	327	$2,057.00
952569-SPO	327	$1,357.00
952570-SPO	327	$2,226.00
9533N-AXT		$340.00
953462-SPO	327	$2,226.00
953474-SPO	327	$2,226.00
95760-RIT	871	$4,480.00
95762-RIT		$5,499.00
9620N-AXT	830	$494.00
9700-AXT	830	$277.90
97000-SIL	819-820	$11.80
97001-SIL	819-820	$52.40
971-FLU	893	$1,754.00
97705-REC	551	$427.00
98250-MAS	872	$524.00
98880-WMI	834	$51.40
99-1-275BP-10-BDG	916	$6.50
99-1-912-BDG	916	$12.00
99-1-9730-10-BDG	916	$25.90
99-1-9800-10-BDG	916	$5.70
99-1-9802-10-BDG	916	$3.80
99-1-9860-10-BDG	916	$9.30
995-ALL	867	$317.00
9RT1-1505-TFE-800-CPD		$18,325.00
9TK1-0505-TFC-800-CPD	65	$19,217.00
A-4000-1037-JCS	570	$148.30
A-4000-147-JCS	570	$2,262.00
A-4000-6010-JCS	570	$895.00
A-4000-604-JCS	569	$336.00
A-4000-620-JCS	569	$144.00
A-4000-632-JCS	569-570	$1,243.00
A-4110-604-JCS	569-570	$336.00
A-4300-600-JCS	569	$1,108.00
A-4412-1-JCS	569	$17,245.00
A-4412-2-JCS	569	$11,991.00
A-4417-1-JCS	569	$18,000.00
A-4423-1-JCS	569	$23,992.00
A-4423-2-JCS	569	$16,503.00
A00414-CFT	220	$2.80
A00415-CFT	220	$3.50
A00416-CFT	220	$6.20
A00479-CFT	218	$10.10
A00480-CFT	218	$17.90
A00481-CFT	218	$17.60
A00485-CFT	220	$4.60
A02258-CBS	218	$24.20
A02259-CFT	218	$22.40
A02272-CFT	218	$25.30
A02378-CFT	218	$28.00
A03431-CFT	218	$4.60
A03443-CFT	218	$10.30
A03449-CFT	219	$14.20
A03464-CFT	218	$15.90
A03466-CFT	218	$9.80
A03492-CFT	218	$8.90
A03494-CFT	218	$14.30
A03504-CFT	218	$21.40
A03511-CFT	219	$23.20
A03519-CFT	218	$22.40
A03546-CFT	218	$18.20
A03547-CFT	218	$18.20
A04738-CFT	220	$14.40
A04770-CFT	218	$29.90
A04826-CFT	218	$36.90
A04878-CFT	218	$30.40
A04879-CFT	218	$17.60
A04898-CFT	219	$17.30
A05041-CFT	218	$12.10
A05307-CFT	218	$22.40
A05425-CFT	218	$30.10
A06601-CFT	218	$21.40
A07851-CFT	219	$21.00
A08073-CFT	220	$25.80
A08127-CFT	218	$19.00
A08166-CFT	220	$102.20
A08274-CFT	220	$26.60
A08276-CFT	220	$82.70
A100-BPT	730	$74.70
A10730-ACC	858	$777.00
A10971-JBI	853	$137.50
A10973-JBI	853	$35.60
A11A-1C-JCS	580	$924.00
A11B-1C-JCS	580	$890.00
A12-1506-RSW	629	$305.00
A12-1560-RSW	629	$270.00
A12-700-RSW	629	$270.00
A12-701-RSW	629	$277.80
A1203-CFT	200	$1.10
A1278-CFT	200	$1.10
A1366-CFT	200	$1.10
A1467-CFT	200	$1.10
A15725-CFT	217	$10.10
A15726-CFT	217	$15.80
A15727-CFT		$23.20
A15728-CFT	217	$22.10
A15729-CFT	217	$36.90

PART #	PG	LIST
A17864XHP-CFT	346	$442.00
A17866-CBS	346	$458.00
A17867-CFT	346	$541.00
A17868-CFT	346	$877.00
A17869-CFT	346	$2,293.00
A17870-CFT	346	$4,116.00
A17871-CFT	346	$1,342.00
A17872-CFT	346	$1,502.00
A17936-CFT	349	$161.30
A17937-CFT	349	$161.30
A17939-CFT	349	$419.00
A17940-CFT	349	$822.00
A17941-CFT	349	$1,677.00
A17942-CFT	349	$1,935.00
A17943-CFT	349	$2,838.00
A17944-CFT	349	$3,209.00
A17981-CFT	349	$4,982.00
A19AAB-10C-JCS	580	$871.00
A19AAC-4C-JCS	581	$514.00
A19AAC-9C-JCS	580	$464.00
A19AAD-5-JCS	581	$481.00
A19AAF-12-JCS	581	$515.00
A19AAF-21-JCS	581	$418.00
A19AAF-4-JCS	582	$558.00
A19ABA-40-JCS	581	$261.50
A19ABC-11-JCS	582	$415.00
A19ABC-12-JCS	582	$464.00
A19ABC-24-JCS	581	$260.20
A19ABC-36-JCS	581	$519.00
A19ABC-4-JCS	581	$460.00
A19ACA-14-JCS	581	$422.00
A19ACA-15-JCS	581	$453.00
A19ADB-1-JCS	581	$462.00
A19ANC-1-JCS	582	$898.00
A19BAB-3-JCS	583	$430.00
A19BAC-1-JCS	583	$464.00
A19BAF-1-JCS	583	$515.00
A19BBC-2-JCS	583	$355.00
A19DAC-1-JCS	584	$344.00
A19EAF-2-JCS	583	$515.00
A19PRC-1-JCS	585	$924.00
A22-1112-RSW	628	$280.30
A22-1114-RSW	630	$317.00
A22-1129-RSW	631	$280.30
A22-2237-RSW	628	$351.00
A22-2451-RSW	630	$280.30
A22-2453-RSW	630	$364.00
A22-391-RSW	628	$280.30
A22-392-RSW	628	$352.00
A22-4506-RSW	631	$352.00
A24-BPT	730	$21.10
A25-BPT	730	$21.40
A2529-CFT	200	$1.10
A2574-CFT	200	$1.90
A26-BPT	730	$21.70
A2614-CFT	200	$2.00
A2650-CFT	200	$2.20
A2675-CFT	200	$2.80
A27-BPT	730	$22.00
A2708-CFT	200	$3.20
A27520G-HON	665	$62.30
A28-BPT	730	$22.40
A28AA-29-JCS	586	$835.00
A28AA-37-JCS	586	$813.00
A28AA-8001-JCS	586	$921.00
A28AK-1-JCS	587	$982.00
A28PJ-1-JCS	587	$1,272.00
A29-BPT	730	$22.70
A30-180-RSW	628	$254.50
A30-182-RSW	628	$285.70
A30-183-RSW	628	$361.00
A30-184-RSW	628	$261.60
A30-2209-RSW	628	$272.80
A30-2210-RSW	628	$243.10
A30-2211-RSW	628	$239.20
A30-260-RSW	628	$261.60
A30-261-RSW	628	$258.50
A30-262-RSW	628	$262.30
A30-263-RSW	628	$239.20
A30-301-RSW	628	$254.60
A30-308-RSW	628	$280.30
A30-310-RSW	628	$318.00
A30-311-RSW	628	$318.00
A30-314-RSW	628	$318.00
A30-323-RSW	628	$224.30
A30-542-RSW	628	$186.90
A30-BPT	730	$23.00
A30-X450-RSW	630	$224.30
A30-X451-RSW	630	$224.30
A30-X452-RSW	630	$242.90
A30-X453-RSW	630	$224.30
A31-BPT	730	$23.40
A31999-JBI	235	$10.30
A32-BPT	730	$23.90
A32004-JBI	232	$24.90
A32008-JBI	232	$74.50
A32100-JBI	232	$233.80
A32101-JBI	232	$36.70
A32525N-JBI	232	$205.20
A33-BPT	730	$24.20
A33000-JBI	234	$123.50
A33600-JBI	236	$52.30
A34-BPT	730	$24.70
A35-BPT	730	$25.10
A36-BPT	730	$25.50
A37-BPT	730	$26.20
A38-BPT	730	$26.70
A39-BPT	730	$27.30
A3F1-SPO	287	$286.80
A3P1-SPO	287	$294.80
A3S1-SPO	287	$294.80
A40-BPT	730	$27.60
A41-BPT	730	$28.00
A42-BPT	730	$28.70
A421ABC-02C-JCS	575	$334.00
A421ABC-03C-JCS	575	$348.00
A421ABD-02C-JCS	575	$385.00
A421ABG-02C-JCS	575	$459.00
A421AEC-01C-JCS	575	$491.00
A421GBF-02C-JCS	575	$334.00
A421GEF-01C-JCS	575	$489.00
A421GEF-02C-JCS	575	$512.00
A43-BPT	730	$29.30
A44-BPT	730	$29.60
A45-BPT	730	$29.90
A46-BPT	730	$30.10
A47-BPT	730	$30.40
A48-BPT	730	$30.70
A49-BPT	730	$31.10
A50-BPT	730	$31.40
A51-BPT	730	$31.80
A52-BPT	730	$32.10
A55-BPT	730	$33.30
A56-BPT	730	$33.60
A57-BPT	730	$33.90
A58-BPT	730	$34.40
A59-BPT	730	$34.80
A60-BPT	730	$35.10
A61-BPT	730	$35.60
A62-BPT	730	$35.90
A63-BPT	730	$36.40
A64-BPT	730	$36.80
A65-BPT	730	$37.10
A66-BPT	730	$37.60
A67-BPT	730	$38.10
A68-BPT	730	$38.40
A69-BPT	730	$43.70
A70-BPT	730	$40.10
A71-BPT	730	$40.50
A72-BPT	730	$45.20
A72AA-2-JCS	588	$794.00
A73-BPT	730	$45.60
A74-BPT	730	$44.40
A75-BPT	730	$41.80
A76-BPT	730	$47.20
A77-BPT	730	$48.00
A78-BPT	730	$47.10
A79-BPT	730	$49.40
A80-BPT	730	$50.20
A81-BPT	730	$51.00
A82-BPT	730	$51.70
A83-BPT	730	$53.20
A84-BPT	730	$54.00
A85-BPT	730	$53.90
A86-BPT	730	$54.70
A88-BPT	730	$56.20
A90-BPT	730	$51.80
A92-BPT	730	$59.80
A93-BPT	730	$60.40
A96-BPT	730	$59.40
AC175-FLU	913	$156.90
AC220-FLU	913	$212.50
AC280-FLU	913	$176.50
AC285-FLU	913	$147.10
AC89-FLU	913	$202.70
ACB-2UA100W-ECO	620	$45.40
ACB-2UA143-ECO	620	$45.40
ACB-2UA17-ECO	620	$45.40
ACB-2UA227W-ECO	620	$45.40
ACB-2UA318W-ECO	620	$45.40
ACB-2UA319W-ECO	620	$45.40
ACB-2UA40W-ECO	620	$45.40
ACB-2UA417W-ECO	620	$45.40
ACB-2UA441W-ECO	620	$45.40
ACB-2UA47W-ECO	620	$45.40
ACB-2UA48W-ECO	620	$45.40
ACB-2UA49W-ECO	620	$45.40
ACB-2UA50W-ECO	620	$45.40
ACB-2UA626W-ECO	620	$45.40
ACB-2UA627W-ECO	620	$45.40
ACB-2UA630W-ECO	620	$45.40
ACB-2UA631W-ECO	620	$45.40
ACB-2UA685W-ECO	620	$45.40
ACB-2UA97W-ECO	620	$45.40
ACB-2UB107MW-ECO	620	$72.00
ACB-2UB148MW-ECO	620	$72.00
ACB-2UB282W-ECO	620	$45.40
ACB-2UB36-ECO	620	$45.40
ACB-2UB37W-ECO	620	$45.40
ACB-2UB428-ECO	620	$45.40
ACB-2UB46W-ECO	620	$45.40
ACB-2UB724W-ECO	620	$45.40

PART #	PG	LIST
ACB-2UB754W-ECO	620	$45.40
ACME-2313-WMJ	725	$7.60
ACME-2403-WMJ	725	$7.60
ADRHE6-0/80-1-1/8-SPO	301-302	$2,262.00
ADRI-1-1/4-0/55-SPO	301-302	$680.00
ADRIE-1-1/4-0/100-SPO	301-302	$680.00
ADRPE3-0/80-1/2-SPO	301-302	$972.00
ADRS-2-0/80-1/2-SPO	301-302	$1,003.00
ADRSE2-0/30-1/2-SPO	301-302	$1,067.00
AE1C-1-ECO	690	$18.20
AHC80-PLUS-ECO	617	$2,029.00
AK104-1-BPT	728	$196.50
AK104-3/4-BPT	728	$286.00
AK114-1-BPT	728	$307.00
AK114-3/4-BPT	728	$710.00
AK124-1-BPT	728	$388.00
AK124-3/4-BPT	728	$808.00
AK54-1-BPT	728	$117.30
AK54-3/4-BPT	728	$104.80
AK54-5/8-BPT	728	$97.40
AK64-1-BPT	728	$114.50
AK64-3/4-BPT	728	$134.60
AK64-5/8-BPT	728	$140.00
AK74-1-BPT	728	$135.40
AK74-3/4-BPT	728	$163.20
AK74-5/8-BPT	728	$332.00
AK84-1-BPT	728	$165.60
AK84-3/4-BPT	728	$190.10
AK84-5/8-BPT	728	$542.00
AK94-1-BPT	728	$183.20
AK94-3/4-BPT	728	$213.40
AM560-FLU	910	$640.00
AM570-FLU	910	$869.00
AMP310-FLU	908	$805.00
AOL-A-SPO	328	$404.00
AOL-C-SPO	328	$462.00
AOL-R1-SPO	328	$443.00
APR8-WTM	227	$17.20
ASC-11-7-SPO		$643.00
ASC-13-9-SPO		$897.00
ASC-5-4-SPO		$348.00
ASC-7-4-SPO		$479.00
ASC-9-5-SPO		$489.00
ASP-MA-230SP-REC	555	$698.00
AUTO-PID+-ECO	617	$520.00
AV760-APP	859	$1,444.00
AWR1203Q71-ECO	619	$344.00
AWR1504Q71-ECO	619	$354.00
AWR2006Q71-ECO	619	$384.00
AWR2510Q71-ECO	619	$445.00
B100-BPT	730	$78.40
B10F2-SPO	287	$585.00
B10S2-SPO	287	$585.00
B10THX14/1P-SC-M-SWE	359	$1,363.00
B10THX20/1P-SC-M-SWE	359	$836.00
B10THX26/1P-SC-M-SWE	359	$1,568.00
B14P2-SPO	288	$606.00
B14S2-SPO	288	$804.00
B19P2-SPO	288	$1,014.00
B19S2-SPO	288	$1,374.00
B28-BPT	730	$31.60
B30-BPT	730	$33.00
B31-BPT	730	$33.80
B32-BPT	730	$33.20
B3213-3/8-3-ERI	201	$2.30
B33-BPT	730	$35.00
B34-BPT	730	$32.00
B35-BPT	730	$32.70
B36-BPT	730	$33.60
B37-BPT	730	$34.90
B38-BPT	730	$35.90
B39-BPT	730	$36.70
B40-BPT	730	$37.50
B41-BPT	730	$38.40
B42-BPT	730	$39.20
B43-BPT	730	$40.00
B44-BPT	730	$40.80
B45-BPT	730	$41.60
B46-BPT	730	$42.40
B47-BPT	730	$43.10
B48-BPT	730	$43.70
B49-BPT	730	$44.40
B52-BPT	730	$46.20
B53-BPT	730	$46.50
B54-BPT	730	$47.00
B55-BPT	730	$47.30
B56-BPT	730	$47.70
B57-BPT	730	$48.00
B58-BPT	730	$48.30
B59-BPT	730	$48.70
B5D5C-SPO	297	$1,647.00
B60-BPT	730	$49.00
B61-BPT	730	$49.60
B62-BPT	730	$50.30
B63-BPT	730	$51.00
B64-BPT	730	$51.60
B65-BPT	730	$52.30
B66-BPT	730	$52.80
B67-BPT	730	$53.40
B68-BPT	730	$53.90
B69-BPT	730	$54.50
B6F1-SPO	287	$353.00
B6P1-SPO	287	$363.00
B6S1-SPO	287	$363.00
B70-BPT	730	$55.30
B71-BPT	730	$56.00
B72-BPT	730	$56.60
B73-BPT	730	$57.30
B74-BPT	730	$58.10
B75-BPT	730	$58.70
B76-BPT	730	$59.60
B7670419-DYN	203	$0.70
B7670429-DYN		$1.10
B7670439-DYN		$1.80
B7670609-DYN	203	$0.70
B7670619-DYN	203	$0.80
B7670629-DYN	203	$0.70
B77-BPT	730	$60.40
B78-BPT	730	$61.20
B79-BPT	730	$62.00
B80-BPT	730	$62.90
B80HX16/1P-SC-M-SWE	359	$1,715.00
B80HX18/1P-SC-M-SWE	359	$1,251.00
B80HX20/1P-SC-M-SWE	359	$2,001.00
B80HX30/1P-SC-M-SWE	359	$1,882.00
B80HX40/1P-SC-M-SWE	359	$3,026.00
B81-BPT	730	$63.60
B82-BPT	730	$65.30
B83-BPT	730	$65.70
B84-BPT	730	$66.40
B85-BPT	730	$66.90
B86-BPT	730	$67.60
B87-BPT	730	$68.20
B88-BPT	730	$68.90
B89-BPT	730	$69.50
B90-BPT	730	$70.20
B91-BPT	730	$71.10
B92-BPT	730	$72.30
B93-BPT	730	$73.50
B94-BPT	730	$74.30
B95-BPT	730	$75.10
B96-BPT	730	$75.90
B97-BPT	730	$76.70
B98-BPT	730	$77.20
B99-BPT	730	$83.80
B9F2-SPO	287	$499.00
B9P2-SPO	287	$499.00
B9S2-SPO	287	$499.00
BA03X08-PWR	357	$128.80
BA04X08-PWR	357	$109.80
BA05X08-PWR	357	$265.20
BA05X10-PWR	357	$177.00
BA07X10-PWR	357	$253.60
BA09X10-PWR	357	$109.80
BA09X14-PWR	357	$209.20
BA11X14-PWR	357	$446.00
BC-01-ECO	617	$30.40
BF1-WTM	802	$98.40
BF20-WSM	802	$158.70
BK100H-BPT	729	$166.10
BK105H-BPT	729	$173.60
BK110H-BPT	729	$182.70
BK115H-BPT	729	$188.40
BK120H-BPT	729	$202.10
BK130H-BPT	729	$221.20
BK52H-BPT	729	$91.30
BK55H-BPT	729	$93.20
BK60H-BPT	729	$93.70
BK62H-BPT	729	$98.80
BK65H-BPT	729	$105.30
BK67H-BPT	729	$108.40
BK70H-BPT	729	$112.20
BK72H-BPT	729	$117.40
BK75H-BPT	729	$125.30
BK77H-BPT	729	$123.80
BK80H-BPT	729	$125.90
BK85H-BPT	729	$139.80
BK90H-BPT	729	$148.80
BK95H-BPT	729	$160.00
BLA0004DP-C-TTC	715	$833.00
BLA0004FP-C-TTC	715	$833.00
BPV21-SUP	234	$16.00
BPV31-SUP	234	$11.60
BRPF4-HPG	820	$11.60
BRZ1000-JBI	814	$135.90
BSB-1X3/4-CBS	231	$6.00
BSB-3/4X1/2-CBS	231	$4.50
BSC-1/2X1/2-CBS	231	$3.40
BSC-1X1-CBS	231	$7.60
BSC-1X1/2-CBS	231	$8.40
BSC-1X3/4-CBS	231	$7.60
BSC-3/4X1/2-CBS	231	$5.70
BSC-3/4X3/4-CBS	231	$4.60
BSCAP-1-1/4-CBS	231	$8.40
BSCAP-1/2-CBS	231	$3.40
BSCAP-3/4-CBS	231	$4.10
BSE-1/2X45-CBS	231	$4.30
BSE-1/2X90-CBS	231	$4.30
BSE-1X45-CBS	231	$9.60
BSE-1X90-CBS	231	$9.60
BSE-3/4X45-CBS	231	$6.50
BSE-3/4X90-CBS	231	$6.20

PART #	PG	LIST
BSN-1/2X1-1/2-CBS	231	$4.60
BSN-1/2X2-1/2-CBS	231	$5.30
BSN-1/2X3-1/2-CBS	231	$6.80
BSN-1/2X4-1/2-CBS	231	$8.00
BSN-1/2X5-1/2-CBS	231	$9.10
BSN-1/2X6-CBS	231	$9.50
BSN-1/2XCLOSE-CBS	231	$4.40
BSN-3/4X1-1/2-CBS	231	$5.70
BSN-3/4X12-CBS	231	$29.30
BSN-3/4X18-CBS	231	$39.90
BSN-3/4X2-1/2-CBS	231	$6.10
BSN-3/4X24-CBS	231	$48.00
BSN-3/4X3-1/2-CBS	231	$7.60
BSN-3/4X4-1/2-CBS	231	$8.90
BSN-3/4X48-CBS	231	$95.80
BSN-3/4X5-1/2-CBS	231	$10.50
BSN-3/4X6-CBS	231	$11.40
BSN-3/4X60-CBS	231	$119.10
BSN-3/4X72-CBS	231	$135.90
BSN-3/4XCLOSE-CBS	231	$5.50
BSP-1-CBS	231	$4.80
BSP-1/2-CBS	231	$3.60
BSP-3/4-CBS	231	$4.60
BSSE-1/2X90-CBS	231	$5.30
BSSE-1X90-CBS	231	$11.40
BSSE-3/4X90-CBS	231	$7.70
BST-1-CBS	231	$12.40
BST-1/2-CBS	231	$5.50
BST-3/4-CBS	231	$7.90
BSU-1-CBS	231	$32.30
BSU-1/2-CBS	231	$21.50
BSU-3/4-CBS	231	$27.50
BUN-MULTI-LOG	883	$568.00
BUSH3273-ALL	717	$13.70
BV2103-C-FAI	231	$11.40
BV2103-D-FAI	231	$15.40
BV2103-E-FAI	231	$21.70
C-032-CAP-SPO	264	$69.50
C-032-CAP-T-SPO	264	$83.70
C-032-F-SPO	264	$61.50
C-032-FM-SPO	264	$73.80
C-032-S-SPO	264	$50.60
C-032-SPO	264	$52.60
C-033-S-SPO	264	$52.30
C-033-SPO	264	$64.30
C-052-CAP-TT-HH-SPO	264	$133.20
C-052-HH-SPO	264,277	$87.00
C-052-S-SPO	264	$59.20
C-052-SPO	264	$62.00
C-053-S-SPO	264	$59.20
C-053-SPO	264	$63.10
C-082-HH-SPO	264,277	$98.50
C-082-S-SPO	264	$76.90
C-082-SPO	264	$77.50
C-083-HH-SPO	264,277	$98.50
C-083-S-HH-SPO	264	$89.60
C-083-S-SPO	264	$72.80
C-083-SPO	264	$75.60
C-084-S-SPO	264	$77.80
C-084-S-T-HH-SPO	264	$115.10
C-084-SPO	264	$86.50
C-14411-G-SPO	264	$1,548.00
C-1448-P-SPO	264	$2,025.00
C-1449-G-SPO	264	$1,548.00
C-145-S-TT-HH-SPO	264,279	$197.80
C-146-S-TT-HH-SPO	264,279	$194.70
C-147-S-TT-HH-SPO	264,279	$197.40
C-149-S-TT-HH-SPO	264,279	$229.90
C-162-HH-SPO	264,277	$122.60
C-162-S-SPO	264	$103.40
C-162-SPO	264	$100.80
C-163-F-SPO	264	$122.70
C-163-HH-SPO	264,277	$115.40
C-163-S-HH-SPO	264,277	$108.20
C-163-S-SPO	264	$93.30
C-163-SPO	264	$96.90
C-164-HH-SPO	264,277	$135.50
C-164-S-HH-SPO	264,277	$122.90
C-164-S-SPO	264	$101.80
C-164-S-T-HH-SPO	264,277	$154.90
C-164-SPO	264	$105.70
C-165-HH-SPO	264,277	$135.50
C-165-S-HH-SPO	264,277	$130.40
C-165-S-SPO	264	$108.00
C-165-S-T-HH-SPO	264	$158.10
C-165-SPO	264	$113.30
C-166-S-T-HH-SPO	264	$167.20
C-167-S-T-HH-SPO	264	$165.60
C-19212-P-SPO	265	$2,438.00
C-19217-G-SPO	265	$2,567.00
C-303-HH-SPO	265,277	$239.30
C-303-S-SPO	265	$173.10
C-303-SPO	265	$177.50
C-304-HH-SPO	265,277	$225.70
C-304-S-HH-SPO	265,277	$219.50
C-304-S-SPO	265	$166.70
C-304-SPO	265	$173.20
C-305-HH-SPO	265,277	$225.70
C-305-S-HH-SPO	265	$217.20
C-305-S-SPO	265	$166.70
C-305-S-T-HH-SPO	265	$271.20
C-305-SPO	265	$173.20
C-306-S-SPO	265	$205.60
C-306-S-T-HH-SPO	265	$262.50
C-307-S-SPO	265	$186.70
C-309-S-SPO	265	$219.70
C-309-S-T-HH-SPO	265	$280.50
C-30E5-SPO	265	$385.00
C-413-SPO	265	$266.50
C-414-HH-SPO	265,277	$319.00
C-414-S-SPO	265	$248.10
C-414-SPO	265	$257.80
C-415-HH-SPO	265,277	$319.00
C-415-S-HH-SPO	265	$298.10
C-415-S-SPO	265	$245.70
C-415-SPO	265	$255.30
C-417-S-HH-SPO	265,277	$307.00
C-417-S-SPO	265	$242.00
C-417-S-T-HH-SPO	265	$343.00
C-419-S-SPO	265	$283.80
C-419-S-T-HH-SPO	265	$358.00
C-4311-S-T-HH-SPO	265	$629.00
C-4313-S-T-HH-SPO	265	$658.00
C-437-S-T-HH-SPO	265	$631.00
C-439-S-T-HH-SPO	265	$623.00
C-607-S-SPO	265	$368.00
C-609-S-SPO	265	$383.00
C-609-S-T-HH-SPO	265	$500.00
C-9611-G-SPO	265	$1,328.00
C-9613-G-SPO	265	$1,397.00
C-966-P-SPO	265	$1,640.00
C-967-G-SPO	265	$1,231.00
C-969-G-SPO	265	$1,231.00
C10-CLT	228	$41.10
C101-FLU	911	$360.00
C12-5010-RSW	635	$271.30
C125-FLU	911	$190.70
C159A-RBM	714	$581.00
C161FJD-1-BAS	621	$585.00
C161KKD-1-BAS	621	$585.00
C17-100-RSW	635	$397.00
C17-9043-RSW	635	$538.00
C2-A20X-120VAC-TCC	747	$46.80
C2-A20X-240VAC-TCC	747	$49.40
C2-A20X-24VAC-TCC	747	$46.80
C20-CLT	228	$104.80
C25-FLU	911	$179.80
C3-A30X-120VAC-TCC	747	$55.30
C3-A30X-240VAC-TCC	747	$53.80
C3-A30X-24VAC-TCC	747	$55.30
C33804-JBI	820	$16.70
C33808-JBI	820	$16.70
C5-CLT	228	$31.00
C50-FLU	911	$192.90
C520A-FLU	911	$294.20
C550-FLU	911	$441.00
C610U-1C-BAS	621	$612.00
C661AHA-1C-BAS	621	$585.00
C7027A1023-OEM	662	$930.00
C7027A1031-OEM	662	$1,026.00
C7027A1049-OEM	662	$893.00
C7031D2003-HON		$250.90
C7031J2009-HON		$494.00
C7041B2005-HON		$75.50
C7041D2001-HON		$80.30
C7041F2006/U-HON		$109.70
C7046D1008/U-HON	643	$251.80
C7130B1009/U-HON	643	$205.20
C7150B1004-HON		$117.20
C7232B1014-HON		$1,334.00
C7250A1001-HON		$80.90
C7400A2001-HON		$364.00
C7400S1000-HON		$285.30
C7770A1040-HON		$86.10
C789-FLU	911	$687.00
CB03-NFL	917-918	$20.00
CC-1-ALL	556	$63.10
CCLE4-60-JBI	854	$473.00
CCLS4-60-JBI	854	$601.00
CCNEOPSA1/2X1-1/2X20-SUR	773	$86.60
	773	$113.60
	773	$58.70
	773	$70.30
CD-5512-ALL	235	$23.50
CD-5514-ALL	235	$21.40
CD-5516-ALL	235	$20.00
CD-5534-ALL	235	$33.30
CD-5538-ALL	235	$21.90
CD1-024R-INT	691	$363.00
CDS4-5-SPO	321	$1,920.00
CDS7-9-SPO	321	$1,939.00
CE10-12-CLT	228	$86.70
CF-3735-ALL		$361.00
CFC-T24-ALL	702	$17.20
CH-100-3-MAR	779	$64.80
CH-100-6-MAR	779	$90.20
CH-101-3-MAR	779	$61.20
CH-102-6-MAR	779	$92.50
CH-103-MAR	779	$61.20
CH-104-6-MAR	779	$90.00
CH-104-MAR	779	$64.80
CH-197-MAR	779	$64.80
CL200-EG-UBS	211	$15.30

PART #	PG	LIST
CL300-EG-UBS	211	$22.60
CL400-EG-UBS	211	$21.20
CL500-EG-UBS	771	$30.30
CL800-KLE	908	$430.00
CM3000-FAN	373	$1,142.00
CO-1-SUP	805	$16.10
CO-1504-AFZ-PRO	564	$1,175.00
CO-205-FLU	906	$865.00
CO-220-FLU	906	$2,182.00
COAX-2051H-AMT	353	$459.00
COAX-2076H-AMT	353	$515.00
COAX-2101H-AMT	353	$641.00
COAX-2150-S-AMT	353	$774.00
COAX-2151H-AMT	353	$805.00
COAX-2200-S-AMT	353	$989.00
COAX-2201J-AMT	353	$1,020.00
COAX-2250-S-AMT	353	$1,152.00
COAX-2251J-AMT	353	$1,183.00
COAX-2300-S-AMT	353	$1,279.00
COAX-2301J-AMT	353	$1,319.00
COAX-2351J-AMT	353	$1,589.00
COAX-2401J-AMT	353	$2,107.00
COAX-2501J-AMT	353	$2,455.00
COAX-2601J-AMT	353	$2,903.00
COAX-2751J-AMT	353	$3,633.00
COAX-3010S-AMT	353	$5,116.00
COAX-3012S-AMT	353	$6,315.00
COAX-3015S-AMT	353	$7,894.00
COAX-3020-S-AMT	353	$10,975.00
COAX-3025-S-AMT	353	$13,170.00
COAX-3030-S-AMT	353	$16,463.00
COCX-0945-H-AMT	355	$858.00
COCX-0946-H-AMT	355	$1,087.00
COCX-1074-H-AMT	355	$1,173.00
COCX-1078-H-AMT	355	$1,760.00
COCX-1079-H-AMT	355	$2,046.00
COCX-2051H-AMT	354	$619.00
COCX-2076H-AMT	354	$695.00
COCX-2101H-AMT	354	$866.00
COCX-2151H-AMT	354	$1,086.00
COCX-2201J-AMT	354	$1,377.00
COCX-2251J-AMT	354	$1,597.00
COCX-2301J-AMT	354	$1,781.00
COCX-2351J-AMT	354	$2,146.00
COCX-2401J-AMT	354	$2,845.00
COCX-2501J-AMT	354	$3,314.00
COCX-2601J-AMT	354	$3,919.00
COCX-2751J-AMT	354	$4,905.00
COCX-3010S-AMT	354	$6,907.00
CP-M230-ALL		$379.00
CP801-SUP	776	$396.00
CP802-240-SUP	776	$467.00
CP804-240-SUP	776	$458.00
CP804-SUP	776	$448.00
CP804HD-240-SUP	776	$538.00
CP804HD-SUP	776	$495.00
CP807-240-SUP	776	$505.00
CP807-SUP	776	$472.00
CP815-240-SUP	776	$651.00
CP816-SUP	776	$481.00
CP817-SUP	776	$472.00
CP818-SUP	776	$472.00
CP819-SUP	776	$491.00
CP820-SUP	776	$495.00
CP821-SUP	776	$637.00
CPLG-1000-TRA	230	$133.60
CPLG-500-TRA	230	$62.20
CPLG-750-TRA	230	$80.00
CR-1-SUP	805	$16.80
CR-87B-SUP	884	$1,241.00
CR-87BC-SUP	884	$1,385.00
CRH24-1-1/4-CHC	384	$372.00
CRH24-1/2-CHC	384	$92.00
CRH24-3/4-CHC	384	$125.90
CRH36-1-CHC	384	$280.30
CRH36-1/2-CHC	384	$107.50
CRH36-3/4-CHC	384	$147.80
CRO4-0/20-1/2-SPO		$709.00
CRO4-0/50-1/2-SPO		$858.00
CRO6-0/60-5/8-SPO		$986.00
CROT10-0/60-1-1/8-SPO		$1,241.00
CROT10-30/110-1-1/8-SPO		$1,363.00
CROT6-0/60-1-1/8-SPO		$972.00
CS-100-100-TRA	230	$1,686.00
CS-500-1-TRA	230	$9.90
CS-750-1-TRA	230	$13.70
CSG-083S-SPO	265,283	$178.30
CSG-084-S-SPO	265,283	$204.60
CSG-163S-SPO	265,283	$202.60
CSG-164-S-SPO	265	$233.20
CT2A30/L-TCC	747	$234.70
CT3E30/H-TCC	747	$186.40
CVMINI-ALL	554	$508.00
CW-1/2-TOO	830	$7.70
CW-1/4-TOO	830	$5.20
CW-13/16-TOO	830	$13.00
CW-3/4-TOO	830	$11.30
CW-3/8-TOO	830	$6.20
CW-5/16-TOO	830	$5.90
CW-5/8-TOO	830	$8.90
CW-7/16-TOO	830	$6.60
CW-9/16-TOO	830	$8.30
CXM-CLT	228	$22.50
CXP-CLT	228	$30.10
D203-6-KLE		$89.80
D203-7-KLE		$89.80
D203-8-KLE		$112.30
D213-9NE-CR-KLE		$149.70
D220-7-KLE		$114.80
D228-8-KLE		$99.80
D245-5-KLE		$114.80
D248-8-KLE		$99.80
D260-2-3/16-SPO		$252.70
D262-5-1/4-SPO		$290.50
D295-4C-KLE		$139.80
D301-6C-KLE		$89.80
D384/392BPK-EPC	823	$5.10
D491-RBM	707	$478.00
D492-RBM	707	$494.00
D502-10-KLE		$89.80
D502-12-KLE		$109.80
D507-10-KLE	830	$124.70
D507-12-KLE	830	$184.70
D507-6-KLE	830	$94.80
D507-8-KLE	830	$99.80
D736-RBM	707	$803.00
D909-RBM		$377.00
D917-RBM		$286.50
DB-204C-ALL	704	$345.00
DB-205C-ALL	704	$353.00
DB-206C-ALL	704	$357.00
DB-208C-ALL	704	$426.00
DB-210C-ALL	704	$520.00
DFP-450W-CPD	892	$131.40
DH-16-REC	551	$223.80
DM-120S-CPD	888	$217.60
DP-4P40A240-ALL	688	$114.70
DPA0004D-TTC	714	$690.00
DPA0004F-TTC	714	$690.00
DPA0014D-TTC	714	$803.00
DPA0014F-TTC	714	$803.00
DPA0024D-TTC	714	$848.00
DPA0024F-TTC	714	$848.00
DPA0034D-TTC	714	$1,138.00
DPA0034F-TTC	714	$1,138.00
DPA0054D-TTC	714	$1,281.00
DPA0054F-TTC	714	$1,281.00
DPA0074D-TTC	714	$1,802.00
DPA0074F-TTC	714	$1,802.00
DPP400W-CPD	892	$100.30
DPS300-CPD	892	$66.40
DSH-14-16V-REC	551	$18.50
DT300-CPD	892	$69.70
DTAV40-INT	693	$366.00
DUP038-HUB	753	$8.40
DV-24N-JBI	859	$699.00
DV-285N-JBI	874	$2,686.00
DV-6E-JBI	874	$1,393.00
DV-T1-JBI	874	$116.00
DVO-12-JBI	874	$41.90
DVO-24-JBI	874	$129.20
E1-10C-FAI	218	$10.80
E1-10D-FAI	218	$11.70
E1-10E-FAI	218	$15.20
E1-12D-FAI	218	$19.40
E1-12E-FAI	218	$19.70
E1-4A-FAI	218	$3.80
E1-4B-FAI	218	$4.30
E1-4C-FAI	218	$4.90
E1-6A-FAI	218	$4.70
E1-6B-FAI	218	$5.00
E1-6C-FAI	218	$4.70
E1-6D-FAI	218	$7.20
E1-8B-FAI	218	$6.50
E1-8C-FAI	218	$6.30
E1-8D-FAI	218	$8.20
E1-8E-FAI	218	$13.70
E110004-RCI	714	$1,430.00
E15-256-RSW	634	$654.00
E15-2601-RSW	634	$539.00
E2-10-FAI	219	$11.90
E2-12-FAI	219	$40.40
E2-4-FAI	219	$4.50
E2-6-FAI	219	$5.80
E20V2.0-FEN	823	$146.70
E3-4A-FAI	219	$5.50
E3-4B-FAI	219	$8.50
E3-6B-FAI	219	$5.70
E3-6C-FAI	219	$6.60
E3-8D-FAI	219	$9.20
E35S1110-HP-SPO	289	$1,897.00
E35S190-SPO	289	$2,120.00
E3S120-SPO	287	$258.20
E3S130-SPO	287	$258.20
E43S1130-HP-SPO	290	$4,132.00
E5S120-HP-SPO	287	$255.20
EADA-020E-TAC-800-CPD	69	$9,636.00
EADB-021E-CAB-800-CPD	69	$9,636.00
EANC1620-A-ELA	376	$189.80
EANC1625-A-ELA	376	$180.30
EANC2020-A-ELA	376	$202.70
EANC2025-A-ELA	376	$192.50
EANC2520-A-ELA	376	$202.70
EAVA-021E-TAC-800-CPD	69	$9,636.00
EAVA-021E-TAD-800-CPD	69	$9,636.00
EAVA-021E-TAE-800-CPD	69	$9,636.00

PART #	PG	LIST
EAVB-021E-CAV-800-CPD	69	$9,636.00
EC39EZ067-OEM	235	$24.40
EDF1-FAN	374	$127.80
EDT10-SUP	690	$87.30
EDT11-SUP	690	$87.30
EDT21-SUP	690	$94.30
ELECT-TAPE-PIC	808	$6.80
EM45HHR-ALL	40	$947.00
EMI45ER1-ALL	40	$818.00
EMI45HER-ALL	40	$879.00
EMI55ER1-ALL	40	$1,008.00
EMI55HER-ALL	40	$962.00
EMIS30HHR1-ALL	40	$715.00
EMIS70HHR1-ALL	40	$1,120.00
EMRAF-FRI	404	$510.00
EP-8000-2-JCS	570	$863.00
ER2-64-FAI	219	$9.80
ER2-84-FAI	219	$17.70
ER2-86-FAI	219	$8.60
ERA1-0200-TAC-800-CPD	66	$10,332.00
ERC2-0200-CAB-800-CPD	66	$10,332.00
ERCA-021E-TAC-800-CPD	68	$9,636.00
ERF1-0300-TAE-800-CPD	66	$11,480.00
ERFA-031E-TAC-800-CPD	68	$10,706.00
ERFA-031E-TAD-800-CPD	68	$10,706.00
ERFA-031E-TAE-800-CPD	68	$10,706.00
ES095E-NUA	369	$1,877.00
ES100H-NUA	369	$2,355.00
ES160E-NUA	369	$2,558.00
ES160H-NUA	369	$2,466.00
ES18809-SUP	749	$11.40
ES18810-SUP	749	$11.30
ES4-44-CFT	219	$32.60
ES4-66-CFT	219	$38.20
ET110-KLE	906	$339.00
ETC-1110-RSW	622	$328.00
ETC-1111-RSW	622	$471.00
ETC-1120-RSW	622	$374.00
ETC-1121-RSW	622	$451.00
ETC-1410-RSW	622	$455.00
ETC-2110-RSW	622	$444.00
ETC-2111-RSW	622	$434.00
ETC-2120-RSW	622	$374.00
ETC-2121-RSW	622	$451.00
ETC-2410-RSW	622	$471.00
EZB-1/2-164-1/2W-LIN	549	$1,545.00
EZB-1/2-164-3/4W-LIN	549	$1,978.00
EZB-1/2-25-1/2W-LIN	549	$250.70
EZB-1/2-50-1/2W-LIN	549	$471.00
EZB-1/4-164-1/2W-LIN	549	$819.00
EZB-1/4-164-3/4W-LIN	549	$1,063.00
EZB-1/4-25-1/2W-LIN	549	$132.80
EZB-1/4-50-1/2W-LIN	549	$249.60
EZB-3/4-82-1/2W-LIN	549	$1,109.00
EZB-3/8-164-1/2W-LIN	549	$1,214.00
EZB-3/8-25-1/2W-LIN	549	$196.90
EZB-3/8-50-1/2W-LIN	549	$370.00
EZB-5/8-164-1/2W-LIN	549	$1,878.00
EZB-5/8-25-1/2W-LIN	549	$305.00
EZB-5/8-50-1/2W-LIN	549	$573.00
EZT113B-REC	556	$42.60
F1026S-RBM	710	$541.00
F214-12A-140-25C-SUP	687	$240.40
F214-13A-140-25C-SUP	687	$250.00
F25-107-RSW	629	$455.00
F261KAH-V01C-JCS	589	$599.00
F261MAH-V01C-JCS	589	$791.00
F300E1019-RES	376	$2,668.00
F300E1027-RES	376	$2,668.00
F300E1035-RES	376	$2,996.00
F47-3TD-120-25C-SUP	687	$240.40
F47-7TD-120-25C-SUP	687	$240.40
FA47TS3-110-SUP	687	$297.20
FAL7C05TD120A-SUP	687	$268.90
FALTS57C05T120A-SUP	687	$307.00
	687	$307.00
FALTS57C65T120A-SUP	687	$307.00
FB350-SUP	725	$8.00
FB401-SUP	725	$7.60
FB403-SUP	725	$8.70
FB404-SUP	725	$7.60
FB450-SUP	725	$7.10
FB455-SUP	725	$9.00
FB501-SUP	725	$11.10
FB504-SUP	725	$9.40
FB550-SUP	725	$9.20
FB601-SUP	725	$10.60
FB604-SUP	725	$10.60
FB650-SUP	725	$11.80
FB660-SUP	725	$11.10
FB665-SUP	725	$10.60
FC802-04-4401-36-API	238	$137.30
FC802-04-4401-48-API	238	$165.60
FC802-04-4401-60-API	238	$193.50
FC802-04-4401-72-API	238	$213.50
FC802-06-4401-36-API	238	$180.40
FC802-06-4401-48-API	238	$232.10
FC802-06-4401-60-API	238	$272.80
FC802-06-4401-72-API	238	$314.00
FC802-08-4401-36-API	238	$140.20
FC802-08-4401-48-API	238	$274.80
FC802-08-4401-60-API	238	$439.00
FC802-08-4401-72-API	238	$355.00
FC802-10-4401-36-API	238	$273.20
FC802-10-4401-48-API	238	$347.00
FC802-10-4401-60-API	238	$568.00
FC802-10-4401-72-API	238	$460.00
FF10BX1-ALL	40	$1,120.00
FF10HBX-ALL	40	$748.00
FF7.5HBK-ALL	40	$1,077.00
FF8.5HBK-ALL	40	$717.00
FFC60BK-ALL	40	$1,031.00
FFI12BKW-ALL	40	$750.00
FFI12BX-ALL	40	$1,206.00
FFI12HBX-ALL	40	$802.00
FGK-P-RS-ALL	777	$27.80
FH20-FAN	374	$116.20
FIT120E-FAN	371	$2,567.00
FIT120H-FAN	371	$1,984.00
FLAME-GARD912-WMI	821	$59.70
FM1QTUZH-120U-INT	694	$322.00
FM1STUZH-24V60-INT	694	$162.50
FP-A-168-CFT	220	$32.80
FP-B-168-CFT	220	$42.20
FP-C-168-CFT	220	$51.50
FR100-FAN	373	$461.00
FR125-FAN	373	$525.00
FR140-FAN	373	$532.00
FR150-FAN	373	$540.00
FR160-FAN	373	$565.00
FR16251D-ECC	375	$107.50
FR16252D-ECC	375	$114.20
FR16254D-ECC	375	$168.00
FR20201D-ECC	375	$107.50
FR20202D-ECC	375	$114.20
FR20204D-ECC	375	$121.00
FR20251D-ECC	375	$107.50
FR20252D-ECC	375	$114.20
FR20254D-ECC	375	$174.70
FS31016-RBM	710	$656.00
FSTF-1000-TRA	230	$43.70
FSTF-500-TRA	230	$32.70
FSTF-750-TRA	230	$47.10
FTPL-1-FLU	911	$528.00
FU-4B-210-CFT	220	$47.60
FU-6C-210-CFT	220	$58.00
G-2010-11-JCS	572	$155.70
G-2010-23-JCS	572	$282.50
G-2010-5-JCS	569,572	$140.50
G303-3131-12-NDL	229	$27.10
G303-3131-24-NDL	229	$36.50
G303-3131-36-NDL	229	$42.80
G303-3131-48-NDL	229	$49.80
G303-3131-60-NDL	229	$63.90
G403-4142-24-NDL	229	$59.50
G403-4142-36-NDL	229	$75.60
G403-4142-48-NDL	229	$90.60
G403-4142-60-NDL	229	$95.00
G403-4142-72-NDL	229	$120.60
G5TWIN-APP	871	$2,871.00
GB-01S-ECO	617	$86.80
GGC-12-ALL	815	$81.60
GM40AV-INT	693	$257.70
GM60-25-20-2-FIL	376	$123.40
GPS.254C-01-TTC	715	$518.00
GPS.334C-01-TTC	715	$553.00
GPS.754C-01-TTC	715	$667.00
GPS0004C-01-TTC	715	$820.00
GRA0004D-01-TTC	715	$859.00
GRA0004F-01-TTC	715	$859.00
GRA0014D-01-TTC	715	$934.00
GRA0014F-01-TTC	715	$934.00
GRA0024D-01-TTC	715	$1,000.00
GRA0024F-01-TTC	715	$1,000.00
GRA0034D-01-TTC	715	$1,301.00
GRA0034F-01-TTC	715	$1,301.00
GRA0054D-01-TTC	715	$1,468.00
GRA0054F-01-TTC	715	$1,468.00
GRA0074D-01-TTC	715	$2,070.00
GRA0074F-01-TTC	715	$2,070.00
GT260-UNA		$5.60
H-1-1/2-BPT	729	$31.10

PART #	PG	LIST
H-1-1/8-BPT	729	$37.80
H-1-3/16-BPT	729	$31.10
H-1-3/8-5/16-BPT	729	$31.10
H-1-5/16-BPT	729	$55.50
H-1-7/16-BPT	729	$31.10
H-1-BPT	729	$37.80
H-1/2-BPT	729	$76.10
H-5/8-BPT	729	$55.50
H-7/8-BPT	729	$38.60
H03FT-PWR	357	$185.10
H05ST-PWR	357	$218.00
H07ST-PWR	357	$325.00
H09ST-PWR	357	$343.00
H17004-SUP	788	$31.20
H20004-SUP	800	$32.20
H7655A1001-HON		$379.00
H91WG-1-BAS	621	$456.00
HAG2-0050-CAA-800-CPD	66	$5,770.00
HAJB-005E-CAV-800-CPD	68	$5,339.00
HB-01-EHT	777	$85.90
HB-02-2-EHT	777	$95.80
HB-02-EHT	777	$91.20
HB-03-EHT	777	$98.60
HB-04-2-EHT	777	$105.90
HB-04-EHT	777	$106.40
HB-05-EHT	777	$114.30
HB-06-2-EHT	777	$126.00
HB-06-EHT	777	$119.30
HB-07-EHT	777	$126.90
HB-08-2-EHT	777	$155.70
HB-09-EHT	777	$137.10
HB-10-2-EHT	777	$191.30
HB-12-2-EHT	777	$226.20
HB-12-EHT	777	$189.50
HB-14-2-EHT	777	$261.00
HB-18-EHT	777	$269.70
HB-24-EHT	777	$352.00
HBL7862D-HUB	750	$707.00
HBL7863D-HUB	750	$408.00
HC6-10-FAI	223	$1.60
HC6-12-FAI	223	$1.60
HC6-16-FAI	223	$1.60
HC6-24-FAI	223	$1.70
HC6-32-FAI	223	$1.90
HC6-40-FAI	223	$2.10
HC6-4TB-FAI	223	$1.00
HC6-6-FAI	223	$1.60
HC6-64-FAI	223	$2.70
HC6-6TB-FAI	223	$1.10
HD-1019-CW-4-EME	722	$105.40
HD-1023-CCW-4-EME		$100.10
HD-1023-CW-4-EME	722	$99.50
HD-1027-CW-4-EME	722	$100.10
HD-1033-CCW-4-EME		$108.40
HD-1033-CW-4-EME	722	$100.10
HD-1219-CCW-4-EME		$114.70
HD-1219-CW-4-EME	722	$114.70
HD-1223-CCW-4-EME		$105.30
HD-1223-CW-4-EME	722	$105.30
HD-1227-CCW-4-EME		$114.70
HD-1227-CW-4-EME	722	$114.70
HD-1233-CW-4-EME	722	$110.20
HD-1419-CCW-4-EME		$132.00
HD-1419-CW-4-EME	722	$121.00
HD-1423-CCW-4-EME		$120.00
HD-1423-CW-4-EME	722	$119.30
HD-1427-CCW-4-EME		$119.90
HD-1427-CW-4-EME	722	$120.00
HD-1433-CW-4-EME	722	$119.90
HD-1619-CCW-4-EME		$144.40
HD-1619-CW-4-EME	722	$145.50
HD-1623-CCW-4-EME		$141.40
HD-1623-CW-4-EME	722	$144.50
HD-1627-CCW-4-EME		$145.50
HD-1627-CW-4-EME	722	$136.20
HD-1633-CCW-4-EME		$143.80
HD-1633-CW-4-EME	722	$143.80
HD-1827-CCW-4-EME		$180.10
HD-1827-CW-4-EME	722	$180.10
HD-1830-CCW-4-EME	722	$189.90
HD-1833-CCW-4-EME		$180.10
HD-1833-CW-4-EME	722	$179.80
HD-2027-CCW-4-EME		$199.30
HD-2027-CW-4-EME	722	$189.80
HD-2033-CCW-4-EME		$167.10
HD-2033-CW-4-EME	722	$191.90
HD-2227-CW-4-EME	723	$216.30
HD-2233-CW-4-EME	723	$226.60
HD-2427-CW-4-EME	723	$225.30
HD-2433-CW-4-EME	723	$250.30
HD-2624-CW-4-EME	723	$262.50
HD-2627-CW-4-EME	723	$273.40
HD-2633-CW-4-EME	723	$278.50
HD-3022-CW-4-AIR	723	$347.00
HD-3027-CW-4-EME	723	$909.00
HE100C1001-RES	375	$481.00
HE150C1014-RES	375	$615.00
HE250C1014-RES	375	$1,119.00
HE300A1005-RES	375	$1,353.00
HGBE-8-75/150-1-1/8-SPO	304	$2,463.00
HGBE-8-75/150-7/8-SPO	304	$2,095.00
HGBE5-95/115-1/2-SPO	304	$1,010.00
HT04-ZSI	199	$6.50
HT06-ZSI	199	$6.50
HT08-ZSI	199	$6.50
HT10-ZSI	199	$6.90
HT12-ZSI	199	$7.40
HT14-ZSI	199	$8.10
HT18-ZSI	199	$9.60
HT22-ZSI	199	$11.00
HT26-ZSI	199	$12.40
HT34-SS-ZSI	199	$112.20
HT416VSGCF-EDG	915	$83.80
HT42-ZSI	199	$25.70
HT50-ZSI	199	$36.10
HT66-ZSI	199	$64.90
HX3643-ALL	352	$11,357.00
HX3700-ALL	352	$1,296.00
HX3702-ALL	352	$783.00
HX3703-ALL	352	$798.00
HX3704-ALL	352	$2,273.00
HX3706-ALL	352	$1,832.00
HX3738-ALL	352	$1,004.00
HX3810-ALL	352	$2,412.00
HX3836-ALL	352	$1,875.00
HX3839-ALL	352	$4,688.00
HXR-100-AMT	350	$454.00
HXR-150-AMT	350	$454.00
HXR-25-AMT	350	$224.60
HXR-250A-AMT	350	$713.00
HXR-350A-AMT	350	$731.00
HXR-50-AMT	350	$254.60
HXR-500-AMT	350	$1,328.00
HXR-75-AMT	350	$353.00
ICG-220-SUP	743	$17.70
ICM102-ALL	732	$67.50
ICM103-ALL	732	$87.50
ICM175-ALL	735	$79.10
ICM203-ALL	733	$77.90
ICM206-ALL	733	$73.30
ICM220-ALL		$116.20
ICM255-ALL	737	$116.80
ICM326HN-ALL	736	$749.00
IL-100-NG-SCW	544	$2,550.00
IL-150-N-SCW	544	$4,262.00
IL-200-N-SCW	544	$4,676.00
IL-37-N-SCW	544	$1,653.00
IL-50-LP-SCW	544	$1,985.00
IL-75-N-SCW	544	$2,301.00
IL18-G-SAN	379	$1,310.00
IL24-G-SAN	379	$1,366.00
IL30-G-SAN	379	$1,395.00
IL40-G-SAN	379	$1,508.00
IL60-G-SAN	379	$1,745.00
IM1050G-TBC	211	$62.40
IM1250G-TBC	211	$71.40
IM2-5/8-TBC	211	$15.30
IM250G-TBC	211	$13.10
IM350G-TBC	211	$18.90
IM42X42G-TBC	211	$4.00
IM450G-TBC	211	$21.50
IM650G-TBC	211	$31.60
IM850G-TBC	211	$39.90
IMCLEVIS-TBC	211	$4.00
ITB-110-30-N-SCW		$4,354.00
ITB-110-40-N-SCW		$4,789.00
ITB-110-50-N-SCW		$5,563.00
ITB-130-30-CN-SCW		$4,354.00
ITB-130-40-CN-SCW		$4,789.00
ITB-130-50-N-SCW		$5,563.00
ITB-155-40-CN-SCW		$4,887.00
ITB-155-50-N-SCW		$5,661.00
ITB-175-50-CL-SCW		$6,144.00
ITB-175-70-N-SCW		$7,083.00
ITB-200-50-CN-SCW		$6,144.00
ITB-60-20-N-SCW		$3,912.00
ITB-60-30-N-SCW		$4,354.00
ITB-80-20-N-SCW		$3,912.00
ITB-80-30-N-SCW		$4,354.00
ITB-80-40-N-SCW		$4,789.00

PART #	PG	LIST
ITBU-110-20-N-SCW		$5,289.00
ITBU-130-20-N-SCW		$5,289.00
ITBU-155-20-N-SCW		$5,387.00
ITBU-155-30-N-SCW		$6,583.00
ITBU-200-30-N-SCW		$7,093.00
ITBU-60-10-N-SCW		$4,376.00
J991LYW-7225-BAS	621	$401.00
JA-0514-XX-SCW	544	$524.00
JA-0528-XX-SCW	544	$88.00
JL-0798-JC-SCW	544	$205.30
JM-0150-XX-SCW	544	$449.00
JS-0508-JZ-SCW	544	$661.00
JS-0532-VC-SCW	544	$69.00
K-3001-RSW	632	$148.90
K-3002-RSW	632	$192.40
K1063-UBS	199	$11.30
K52-L-S-KAS	768	$1,092.00
K53-L-S-KAS	768	$1,795.00
K55-L-S-1-1/8-1-5/8-KAS	769	$2,367.00
K56-S-1-3/4-KAS	769	$285.50
K56-S-3/4-KAS	769	$276.00
K56-S-FLUSH-KAS	769	$275.20
K56L-L-KAS	769	$515.00
K58L-L-KAS	769	$322.00
K59-S-1-3/4-KAS	769	$127.70
K59-S-3/4-KAS	769	$108.20
K59-S-FLUSH-CHR-KAS	769	$135.40
KAAB-007E-CAA-800-CPD	69	$5,255.00
KAGA-0150-TAC-800-CPD	66	$7,066.00
KAGB-005E-IAA-800-CPD	69	$4,919.00
KAGB-0150-CAV-800-CPD	66	$6,565.00
KAJA-011E-TAC-800-CPD	69	$5,964.00
KAJA-011E-TAD-800-CPD	69	$5,964.00
KAJB-010E-CAV-800-CPD	69	$5,964.00
KAKA-0200-TAC-800-CPD	66-67	$7,681.00
KAKA-020E-TAC-800-CPD	68	$7,165.00
KAKB-011E-CAV-800-CPD	69	$6,284.00
KAKB-021E-CAV-800-CPD	68	$7,165.00
KALA-016E-TAC-800-CPD	69	$6,935.00
KALB-010E-CAV-800-CPD	69	$5,964.00
KALB-015E-CAV-800-CPD	69	$6,935.00
KAM1-0100-TAC-800-CPD	66	$6,399.00
KAMA-007E-TAC-800-CPD	69	$5,128.00
KAMB-007E-CAA-800-CPD	69	$5,128.00
KANB-005E-IAA-800-CPD	69	$4,919.00
KARA-010E-TAC-800-CPD	68	$5,995.00
KARB-010E-CAV-800-CPD	68	$5,995.00
KATA-015E-TAC-800-CPD	69	$6,935.00
KATB-015E-CAV-233-CPD	69	$5,106.00
KBWC-110K-BAL	717	$154.50
KBWC-115K-BAL	374,717	$184.90
KBWC-13K-BAL	717	$69.60
KBWC-15K-BAL	717	$73.50
KBWC-16K-BAL	717	$77.00
KIT-39516-SCR	202	$92.70
KIT150-RBM	716	$30.40
KIT315-RBM	716	$79.00
KIT34-RBM	716	$79.00
KIT49-RBM	716	$32.70
KIT50-RBM	716	$75.50
KP-340-KNY	915	$149.00
KPK-M20-MVP-EX-WEC	753	$20.20
L10-X008-KAS		$41.10
L1706-SWC		$163.40
L1921-SWC	758	$119.00
L4064B2210-RES	651	$480.00
L4064B2228-RES	651	$462.00
L59-3B-A-SUP	687	$122.50
L59-7B-A-SUP	687	$127.40
L62GB-3C-BAS	621	$550.00
LAC-10-180-11X7-SPO		$2,311.00
LAC-4-100-1/2-ODF-SPO		$718.00
LAC-4-100-3/8-ODF-SPO		$594.00
LAC-4-DS-100/180-1/2-SPO		$633.00
LAC-5-180-1/2-ODF-SPO		$1,274.00
LACB-032E-CAB-800-CPD	69	$11,448.00
LAHA-032E-TAC-800-CPD	69	$11,448.00
LAHA-032E-TAE-800-CPD	69	$11,448.00
LAHB-032E-CAB-800-CPD	69	$11,448.00
LALA-032E-TAC-800-CPD	69	$11,448.00
LALB-032E-CAB-800-CPD	69	$11,448.00
LCFI-122-W-REC	550	$54.90
LCFI-92-W-REC	550	$42.20
LCFO-122-W-REC	550	$54.90
LCFO-92-W-REC	550	$42.20
LCI-122-W-REC	550	$54.90
LCI-92-W-REC	550	$42.20
LCO-122-W-REC	550	$54.90
LCO-92-W-REC	550	$42.20
LD-122-W-REC	550	$102.30
LD-92-W-REC	550	$78.70
LDK-110000-070-RSW	633	$90.10
LDK-310000-070-RSW	633	$65.80
LDK-410000-070-RSW	633	$75.80
LDR-122-92-W-REC	550	$30.90
LEN-122-W-REC	550	$21.90
LEN-92-W-REC	550	$16.90
LF-122-W-REC	550	$86.50
LF-92-W-REC	550	$66.50
LFJ-122-W-REC	550	$25.70
LFJ-92-W-REC	550	$23.60
LGW1000-HON		$1,704.00
LHXR-15-AMT	350	$1,712.00
LHXR-20-AMT	350	$1,785.00
LHXR-25-AMT	350	$1,965.00
LHXR-30-AMT	350	$2,027.00
LHXR-35-AMT	350	$2,150.00
LHXR-40-AMT	350	$2,713.00
LHXR-50-AMT	350	$2,749.00
LJ-122-W-REC	550	$15.40
LJ-92-W-REC	550	$15.00
LK-122-W-REC	550	$40.30
LK-92-W-REC	550	$31.00
LKF-122-W-REC	550	$48.80
LKF-92-W-REC	550	$37.50
LKS-122-W-REC	550	$51.00
LKS-92-W-REC	550	$39.10
LP-122-W-REC	550	$46.00
LP-92-W-REC	550	$35.30
LT-122-W-REC	550	$72.60
LT-92-W-REC	550	$55.80
LVD2-FLU	908	$189.80
LW-122-W-REC	550	$40.10
LW-92-W-REC	550	$30.90
LWF-122-W-REC	550	$42.20
LWF-92-W-REC	550	$32.50
LWS-C1030Q13-ECO	619	$180.60
M-1-ALL	824	$25.90
M-110-ALL	352	$2,689.00
M-2-ALL	824	$36.60
M-3-ALL	824	$43.20
M-30-ALL	352	$705.00
M-501-SUP	905	$671.00
M-60-ALL	352	$2,130.00
M2-5-410AB-JBI	855	$401.00
M7415A1006/U-HON		$1,341.00
M7415B1004-HON		$1,341.00
M8405A1006-HON		$1,348.00
M8415A1004-HON		$1,650.00
M9185D4008-HON		$3,799.00
M9194D1003-HON		$6,279.00
MA-115/230-REC	554	$505.00
MA-4-4-16-FAB	107	$263.80
MA-5-4-16-FAB	107	$313.00
MA-7-4-16-FAB	107	$419.00
MAG1YL-SUP	756	$34.00
MB-UNI-REC	554	$479.00
MB10F2-SPO	287	$913.00
MB10S2-SPO	287	$913.00
MB14S2-SPO	288	$978.00
MB25P2-SPO	288	$2,167.00
MB30-ALB	552	$83.30
MB36-ALB	552	$97.40
MB42-ALB	552	$110.90
MB6F1-SPO	287	$484.00
MB6S1-SPO	287	$484.00
MB9F2-SPO	287	$803.00
MBK-6-ALL	815	$1,943.00
MDEH1-FAN	374	$91.00
ME35S1110-HP-SPO	289-290	$2,010.00
ME35S190-HP-SPO	289	$1,923.00
ME43S1130-HP-SPO	290	$3,412.00
ME43S1170-SPO	290	$3,914.00
ME9S230-SPO	287	$610.00
MG-12S-ALL	636	$72.70
MG-3-ALL	636	$74.60
MG44-FLP	859	$791.00
MH-10-ALL	352	$407.00
MH-15-ALL	352	$506.00
MH-2-ALL	352	$234.10
MH-20-ALL	352	$587.00
MH-3-ALL	352	$255.10
MH-5-ALL	352	$320.00
MICROSOL-II-PLUS-ECO	617	$463.00
MIL72AQWUZH-120V-INT	694	$511.00
MIL72ASTUZ-120V-INT	694	$179.80
MIL72ASWUZH-120V-INT	694	$331.00
MKC-1-240V-SPO		$202.10
MKC-2-240V-SPO		$247.50
ML-UNI-REC	554	$600.00
ML45-SUP	690	$12.50
ML50-SUP	690	$12.50

PART #	PG	LIST
ML55-SUP	690	$12.50
ML60-SUP	690	$12.50
ML6161A2009-HON		$812.00
ML70-SUP	690	$12.50
ML80-SUP	690	$12.50
MO-UNI-REC	554	$459.00
MP-18-ALL	229	$63.90
MP-18E-ALL	229	$159.60
MP-2E-ALL	229	$2.50
MP-4E-ALL	229	$6.60
MP-6E-ALL	229	$14.70
MPR1-SUP	741	$132.10
MPR5-SUP	741	$118.00
MR2PM24-11C-JCS	579	$1,437.00
MR45-FLP	869	$3,289.00
MR4PM12C-12C-JCS	579	$1,451.00
MR4PMUHV-12C-JCS	579	$1,569.00
MS4DR24T-11C-JCS	579	$1,412.00
MS4PMUHVT-11C-JCS	579	$2,283.00
MS7503A2030-HON		$854.00
MT-512E-2HP-ECO	617	$190.70
MT-512EL-2HP-ECO	617	$190.70
MT514E-ECO	617	$261.20
MT514EL-ECO	617	$243.50
MT530E-L-SUPER-ECO	617	$678.00
MT543RIL-PLUS-ECO	617	$397.00
MU025-UBS	200	$6.30
MU050-UBS	200	$7.50
MU075-UBS	200	$10.40
MU100-UBS	200	$12.00
MU125-UBS	200	$12.30
MU150-UBS	200	$14.80
MU200-UBS	200	$19.60
MU250-UBS	200	$26.40
MU300-UBS	200	$31.70
MU350-UBS	200	$38.10
MU400-UBS	200	$32.20
N4-10-FAI		$11.50
N4-12-FAI	217	$18.20
N4-4-FAI	217	$4.00
N4-5-FAI		$15.80
N4-6-FAI	217	$3.70
N4-8-FAI	217	$6.50
N43/48D-CCC	383	$4,503.00
N5-10-FAI	220	$5.80
N5-12-FAI	220	$16.70
N5-4-FAI	220	$1.20
N5-5-FAI	220	$4.10
N5-6-FAI	220	$2.60
N5-8-FAI	220	$2.90
N56/66D-CCC	383	$5,662.00
NAV-460-NUA	369	$110.40
NAV-561-NUA	369	$220.80
NB-48-NDL	239	$77.60
NBV02-S-CFT	346	$93.00
NBV03-S-CFT	346	$93.00
NBV04-S-CFT	346	$93.00
NBV05-S-CFT	346	$93.00
NBV06-S-CFT	346	$164.30
NBV07-S-CFT	346	$126.20
NBV09-S-CFT	346	$186.10
NBV11-S-CFT	346	$289.00
NBV12FFS-CFT	346	$130.70
NBV13-S-CFT	346	$322.00
NBV14FFS-CFT	346	$115.00
NBV17-S-CFT	346	$495.00
NBV21-S-CFT	346	$1,905.00
NBV25-S-CFT	346	$2,981.00
NBV38FFS-CFT	346	$127.70
NBV58FFS-CFT	346	$136.90
NC-100-NDL	239	$175.10
NC-48-NDL	239	$77.60
NCH-032S-TW-NDL	239	$49.40
NCH-033S-TW-NDL	239	$49.40
NCH-052F-TW-NDL	239	$67.50
NCH-052S-TW-NDL	239	$67.50
NCH-053S-TW-NDL	239	$67.50
NCH-082F-TW-NDL	239	$84.50
NCH-082S-TW-NDL	239	$84.50
NCH-083F-TW-NDL	239	$84.50
NCH-083S-TW-NDL	239	$74.40
NCH-084S-TW-NDL	239	$84.50
NCH-163F-TW-NDL	239	$99.80
NCH-163S-TW-NDL	239	$88.10
NCH-164F-TW-NDL	239	$99.80
NCH-164S-TW-NDL	239	$99.80
NCH-165S-TW-NDL	239	$99.80
NCH-303F-TW-NDL	239	$149.10
NCH-303S-TW-NDL	239	$149.10
NCH-304F-TW-NDL	239	$116.60
NCH-304S-TW-NDL	239	$149.10
NCH-305F-TW-NDL	239	$149.10
NCH-305S-TW-NDL	239	$149.10
NCH-306S-TW-NDL	239	$153.60
NCH-307S-TW-NDL	239	$158.20
NCH-309S-TW-NDL	239	$174.40
NCH-414S-TW-NDL	239	$189.30
NCH-415F-TW-NDL	239	$189.30
NCH-417S-TW-NDL	239	$225.40
NCH-419S-TW-NDL	239	$261.50
NCVT-6-KLE	908	$151.10
NE2121Z1-ALL	40	$1,335.00
NE9213E1-ALL	41	$894.00
NE9213E2-ALL	41	$1,477.00
NEK2125GK1-ALL	41	$939.00
NEK2134GK1-ALL	41	$1,086.00
NEK2150GK1-ALL	41	$1,245.00
NEK6160Z1-ALL	40	$1,292.00
NEK6170Z1-ALL	40	$1,292.00
NEK6181GK1-ALL	41	$1,395.00
NEK6187Z1-ALL	40	$1,292.00
NEK6210GK1-ALL	41	$1,464.00
NEK6210GK2-ALL	41	$1,464.00
NEK6210Z1-ALL	40	$1,335.00
NFP-75-REC	551	$28.40
NFT5-4-100-JBI	235	$1.40
NFT5-6-100-JBI	235	$4.30
NG8150-SIG	850	$74.60
NJ2192GK1-ALL	41	$1,919.00
NJ2212GJ2-ALL	41	$3,445.00
NJ2212GK1-ALL	41	$3,359.00
NJ6220Z1-ALL	40	$1,919.00
NJ6220Z2-ALL	40	$1,919.00
NJ6226Z2-ALL	40	$1,978.00
NJ7238E2-ALL	41	$3,445.00
NJ9226GK2-ALL	41	$2,756.00
NMC038-HUB	753	$3.00
NO33L-RBM	716	$84.60
NO50L-RBM	716	$84.60
NP1I-HUB	754	$1.40
NP8I-HUB	754	$1.40
NPE-48-BD-NDL	239	$158.80
NRA2-0500-TFC-800-CPD	66	$14,730.00
NRB2-0400-TFC-800-CPD	66	$14,628.00
NRD1-032E-TFD-800-CPD	69	$13,589.00
NRD1-040E-CFB-800-CPD	69	$13,641.00
NRM1-0500-TFC-800-CPD	66	$14,730.00
NRS4-108-FAI	217	$10.20
NRS4-54-FAI	217	$17.90
NRS4-64-FAI	217	$6.70
NRS4-65-FAI	217	$7.20
NRS4-86-FAI	217	$4.90
NS2000003-RSW	681	$104.30
NS4-10-FAI	217	$5.60
NS4-12-FAI	217	$14.00
NS4-14-FAI	217	$39.10
NS4-3-FAI	217	$8.20
NS4-4-FAI	217	$1.80
NS4-5-FAI	217	$3.30
NS4-6-FAI	217	$2.80
NS4-8-FAI	217	$3.80
NSS-48-NDL	239	$90.80
NT2168GKV1-ALL	41	$1,746.00
NT2168GKV2-ALL	41	$2,412.00
NT2180GKV1-ALL	41	$1,996.00
NT2180GKV2-ALL	41	$1,948.00
NT6215Z1-ALL	40	$1,568.00
NT6217GKV1-ALL	41	$2,756.00
NT6217Z1-ALL	40	$1,663.00
NT6217Z2-ALL	40	$1,538.00
NT6220GKV1-ALL	41	$2,756.00
NT6220GKV2-ALL	41	$2,756.00
NT6222GKV1-ALL	41	$2,756.00
NT6222GKV2-ALL	41	$2,756.00
NU145H-NUA	369	$2,245.00
O10-1402-RSW		$347.00
O10-1473-RSW		$357.00
O10-1483-RSW		$332.00
O10-2000-RSW		$337.00
O12-1502-RSW		$519.00
O12-1505-RSW		$346.00
O12-1506-RSW		$523.00
O12-1549-RSW		$576.00
O12-1550-RSW		$523.00
O12-1594-RSW		$519.00
O12-4833-RSW		$670.00
O12-4834-RSW		$617.00
O12-4846-RSW		$542.00
O16-166-RSW		$409.00
O16-527-RSW		$377.00
O16-557-RSW		$449.00
O16-588-RSW		$461.00
OB25S290-SPO	288	$2,524.00
OB9S2-SPO	287	$1,154.00
OE10S250-HP-SPO	287	$832.00
OE14S250-HP-SPO	288	$871.00
OE19S270-SPO	288	$1,337.00
OE25S290-SPO	288	$1,758.00
OE35S1110-HP-SPO	289	$2,318.00
OE43S1130-HP-SPO	290	$3,596.00
OE43S1170-HP-SPO	290	$3,706.00
OE9S230-SPO	287	$835.00
OE9S240-HP-SPO	287	$742.00
OF-303-BP-SPO		$636.00
OF-303-SPO		$587.00
OIL32-FLP	874	$44.50
OL-60FH-SPO	328-329	$1,231.00
OL-60HH-6-SPO	328-329	$1,221.00
OL-60NH-2-SPO	328-329	$1,372.00
OL-60XH-SPO	328-329	$1,231.00
OM25-WTM	818	$121.60
ORD-4-20-SPO	306	$348.00
ORI10-65/225-1-1/8-SPO	306	$1,674.00

PART #	PG	LIST
ORI10-65/225-1-3/8-SPO	306	$1,674.00
ORI6-65/225-1-1/8-SPO	306	$948.00
ORI6-65/225-5/8-SPO	306	$920.00
ORI6-65/225-7/8-SPO	306	$948.00
OROA5-100-58-SPO	306	$1,223.00
OROA5-100-78-SPO	306	$1,223.00
OU1020-CW-AIR	724	$17.00
OU1031-CW-AIR	724	$29.00
OU631-CW-AIR	724	$21.80
OU720-CW-AIR	724	$13.20
OU731-CW-AIR	724	$21.80
OU820-CW-AIR	724	$13.80
OU831-CW-AIR	724	$21.80
OU931-CW-AIR	724	$29.00
P-065-NA1-MAR	749	$191.70
P1000-20FT-UBS	199	$192.00
P1008-UBS	199	$3.10
P100AC-2C-JCS	600	$126.20
P100AP-201C-JCS	600,611	$111.70
P100AP-2C-JCS	600	$111.70
P100AP-332-JCS	611	$117.90
P100AP-3C-JCS	600	$113.70
P100AP-4C-JCS	600	$111.70
P100CC-9C-JCS	600	$126.20
P100CP-1C-JCS	600	$111.70
P100CP-2C-JCS	600	$113.70
P100CP-85-JCS	611	$128.20
P100DA-1-JCS	600	$200.60
P100DA-2-JCS	600	$204.70
P100DA-81-JCS	611	$169.60
P100DA-86-JCS	611	$153.10
P100DC-3-JCS	600	$215.10
P10BC-7-JCS	590	$401.00
P1115-UBS	199	$12.70
P1117-UBS	199	$13.30
P1118-UBS	199	$16.40
P1119-UBS	199	$22.40
P1120-UBS	199	$40.00
P1121-UBS	199	$40.70
P1123-UBS	199	$43.60
P1124-UBS	199	$49.20
P128AA-1-JCS	593	$997.00
P128AA-17-JCS	593	$986.00
P128AA-2-JCS	593	$977.00
P145NCB-12C-JCS	593	$955.00
P145NCB-82C-JCS	593	$955.00
P1546-UBS	203	$12.30
P170AA-118-JCS	596	$393.00
P170AA-2-JCS	611	$420.00
P170AA-400-JCS	611	$393.00
P170AB-12-JCS	595	$391.00
P170AB-2-JCS	595	$395.00
P170CA-1-JCS	595	$474.00
P170CA-3-JCS	596	$443.00
P170CA-400-JCS	611	$428.00
P170DA-1-JCS	596	$455.00
P170DA-400-JCS	611	$455.00
P170KA-1-JCS	597	$637.00
P170LB-1-JCS	598	$744.00
P170LB-6-JCS	598	$744.00
P170MA-1-JCS	598	$765.00
P170MA-18-JCS	598	$837.00
P170NA-1-JCS	598	$762.00
P2-10-FAI	220	$8.60
P2-12-FAI	220	$10.10
P2-4-FAI	220	$2.00
P2-5-FAI	220	$7.80
P2-6-FAI	220	$3.00
P2-8-FAI	220	$4.00
P2024-UBS	199	$7.80
P2025-UBS	199	$8.60
P2026-UBS	199	$8.60
P2027-UBS	199	$8.70
P2028-UBS	199	$8.70
P2029-UBS	199	$9.10
P2030-UBS	199	$9.60
P2032-UBS		$10.10
P2033-UBS	199	$10.20
P2034-UBS	199	$10.20
P2035-UBS		$10.20
P2037-UBS		$14.30
P2038-UBS		$15.40
P2039-UBS		$17.80
P2040-UBS		$18.70
P2043-UBS		$19.70
P2044-UBS		$21.40
P2047-UBS		$22.10
P2048-UBS		$23.90
P2051-UBS		$26.60
P2055-UBS	199	$41.40
P2059-UBS	199	$50.90
P20BB-1-JCS	590	$240.80
P20DB-1-JCS	590	$339.00
P20EB-1-JCS	590	$297.80
P20EB-2-JCS	590	$325.00
P266ABA-100-JCS	602,611	$1,766.00
P266ACA-100-JCS	602	$1,478.00
P266BHA-100-JCS	602	$1,825.00
P266SNR-1-JCS	602	$471.00
P266SNR-2-JCS	602	$471.00
P29NC-2-JCS	592	$966.00
P29NC-3-JCS	592	$966.00
P30-5826-RSW	625	$772.00
P30-5827-RSW	625	$755.00
P32AC-1-JCS	592	$335.00
P32AC-2-JCS	592	$374.00
P32AF-1C-JCI	592	$335.00
P32AF-2-JCS	592	$374.00
P3300-SS-UBS	199	$0.00
P3300T-UBS	199	$88.30
P40-R-SCW	543	$4,506.00
P470EB-1C-JCS	610	$410.00
P470FB-1C-JCS	610	$397.00
P499RCP-101C-JCS	610	$517.00
P499RCP-101K-JCS	610	$576.00
P499RCP-105C-JCS	610	$517.00
P499RCP-105K-JCS	610	$576.00
P545NCB-22-JCS	601	$930.00
P545NCB-25C-JCS	601	$967.00
P545NCB-82-OEM	601	$1,337.00
P70AA-118-JCS	595	$424.00
P70AA-119-JCS	595	$749.00
P70AA-2-JCS	595	$434.00
P70AA-5-JCS	594	$777.00
P70AB-12-JCS	594	$426.00
P70AB-2-JCS	594	$426.00
P70CA-1-JCS	594	$459.00
P70CA-2-JCS	595	$436.00
P70CA-3-JCS	595	$471.00
P70CA-4-JCS	594	$831.00
P70CA-400-JCS	611	$471.00
P70CA-5-JCS	595	$824.00
P70DA-1-JCS	595	$474.00
P70DA-2-JCS	595	$862.00
P70DA-400-JCS	611	$471.00
P70KA-1-JCS	596	$680.00
P70LB-1-JCS	597	$794.00
P70LB-6-JCS	597	$794.00
P70MA-1-JCS	597	$802.00
P70MA-2-JCS	597	$1,557.00
P70NA-1-JCS	597	$811.00
P72AA-1-JCS	598	$639.00
P72AA-27-JCS	599	$645.00
P72CA-2-JCS	599	$666.00
P72DA-1-JCS	599	$690.00
P72LB-1-JCS	599	$1,010.00
P72MA-1-JCS	599	$1,038.00
P72NA-1-JCS	599	$1,028.00
P74AA-1-JCS	600	$797.00
P74BA-1-JCS	600	$767.00
P74EA-8C-JCS	600	$777.00
P74FA-1-JCS	600	$738.00
PCL16-WTM	227	$25.00
PCT100RIL-ECO	617	$556.00
PDE07K3SG-FRI	403	$3,159.00
PDH07K3SG-FRI	403	$3,224.00
PDXDAA-FRI	404	$1,459.00
PDXRTA-FRI	404	$270.10
PDXWSEXT-FRI	404	$0.00
PH-70-DOU	355	$3,029.00
PH-95-DOU	355	$3,268.00
PHASELOGPLUS-ECO	617	$533.00
PINK-TEFLON-TAPE-UNA		$3.50
PL8-WTM	227	$18.30
PM-120-CPD	888	$112.50
PM55A-FLU	910	$350.00
PPL8-WTM	227	$16.80
PR-24/120-36W-SUP	686	$198.10
PR-351N-I-REC	551	$29.70
PR-351N-M-REC	551	$36.50
PRC-351N-REC	551	$23.90
PRH2-FLP	890	$286.20
PRO-41-SUP	743	$26.00
PS0509NGY-HUB	752	$30.50
PS0759NGY-HUB	752	$47.80
PS3500-ASE	199,203	$19.30
PTI120-FLU	896	$5,126.00
PVC-1-1/2-10FT-IPX	226	$81.20
PVC-1-1/4-20FT-IPX	226	$44.80
PVC-106-FAI	227	$2.10
PVC-128-FAI	227	$2.60
PVC-1410-FAI	227	$3.70
PVC-1712-FAI	227	$4.40
PVC-2116-FAI	227	$6.90
PVC-3/4-10FT-IPX	226	$11.20
PXAA-FRI	404	$375.00
PXCJA-FRI	404	$174.30
PXDR10-FRI	404	$55.80
PXFTA-FRI	404	$63.60
PXPC23015A-FRI		$213.50
PXPC23020A-FRI		$213.50
PXPC26515A-FRI		$213.50
PXSBA-FRI	404	$287.60
PXSC-FRI	404	$497.00
Q179B1042-HON	662	$1,078.00
Q313A1055-RES	658	$248.80
Q313A1188-RES	658	$214.70
Q313A1402-RES	658	$217.30
Q313B1005-RES	658	$287.70
Q314A4586-RES	658	$145.90
Q314A6094-RES	658	$145.90
Q314A6102-RES	658	$146.70
Q327A1626-RES	658	$169.90
Q340A1066/U-RES	657	$35.10

PART #	PG	LIST
Q340A1074/U-RES	657	$36.60
Q340A1082/U-RES	657	$38.70
Q340A1090/U-RES	657	$40.10
Q340A1108/U-RES	657	$44.40
Q769C1007-HON		$307.00
Q77-1000-SFS	803	$66.70
Q77-1250-SFS	803	$1,408.00
Q90CC-1C-BAS	621	$338.00
Q90DD-1C-BAS	621	$344.00
QAV-2-ALL	233	$55.30
QC-S5S-JBI	236	$29.00
QD-1/4-UBS	201	$8.40
QD-3/8-UBS	201	$12.20
QT-1-ALL	233	$26.20
QT-2-ALL	233	$17.90
QT2810-MSE	753	$172.90
QT2812-MSE	753	$166.30
QTH-1-ALL	233	$121.50
QTH-2-ALL	233	$103.20
QTM-1-ALL	233	$16.10
QTM-2-ALL	233	$20.00
R-101L-ALL	705	$176.10
R-108-ALL	705	$301.00
R-114-ALL	705	$234.30
R-1211-ALL		$198.00
R-122-ALL	705	$289.60
R-124-ALL	705	$291.00
R-125-ALL	705	$291.20
R-127-ALL	705	$186.80
R-128-ALL	705	$200.60
R-129-ALL	705	$170.80
R-130-ALL	700	$282.10
R-137-ALL	705	$269.90
R-201-ALL	699	$184.30
R-2011-ALL	706	$973.00
R-203-ALL	699	$159.70
R-206-ALL	699	$233.60
R-207-ALL	699	$156.90
R-208-ALL	699	$185.40
R-209-ALL	699	$185.50
R-210-ALL	699	$181.40
R-215-ALL	699	$188.70
R-217-ALL	699	$180.40
R-219-ALL	699	$241.20
R-222-ALL	699	$159.60
R-224-ALL	699	$173.70
R-231-ALL	699	$251.10
R-233-ALL	699	$164.80
R-302-ALL	700	$174.60
R-304-ALL	700	$234.40
R-305-ALL	700	$177.50
R-307-ALL	700	$360.00
R-309-ALL	700	$225.60
R-315-ALL	700	$227.60
R-319-ALL	700	$164.20
R-326-ALL	700	$289.80
R-340-ALL	700	$317.00
R-355-ALL	700	$320.00
R-356-ALL	700	$299.30
R-357-ALL	700	$296.60
R-358-ALL	700	$162.10
R-359-ALL	700	$163.20
R-360-ALL	700	$189.70
R-3612-ALL	706	$812.00
R-3710-1005-JCS	571	$58.40
R-3710-1007-JCS	571	$58.40
R-3710-2007-JCS	571	$48.10
R-3710-3007-JCS	571	$56.50
R-450-ALL	699	$775.00
R-506-ALL	699	$165.50
R-5109-ALL	706	$134.90
R-5221-MAR	706	$209.50
R-5611-ALL	706	$287.50
R-5911-ALL	706	$214.70
R-90721-ALL	700	$211.30
R101L-KNY	918	$76.20
R101X-KNY	918	$76.20
R103-2X-KNY	918	$171.90
R103L-KNY	918	$171.90
R103X-KNY	918	$171.90
R110-REE		$165.70
R1363-UNI	816	$330.00
R42-2800-SFS	763	$26.20
R5311-ALL	706	$328.00
RA890F1288-HON		$6,208.00
RB1000-SIG	850	$43.20
RC-10098-HH-SPO	277	$389.00
RC-4864-HH-SPO	277	$174.50
RF200-ALL	702	$171.30
RF205-ALL	702	$171.80
RF210-ALL	702	$201.90
RF215-ALL	702	$170.70
RF220-ALL	702	$201.90
RF225-ALL	702	$201.90
RF230-ALL	702	$118.40
RF235-ALL	702	$212.80
RF240-ALL	702	$328.00
RF245-ALL	702	$328.00
RF250-ALL	702	$622.00
RF255-ALL	702	$622.00
RGE-Z1Q6-7L-ECO	618	$669.00
RING-1000-TRA	230	$30.20
RING-500-TRA	230	$23.80
RING-750-TRA	230	$28.90
RLY13A-609R-JCS	591	$551.00
RLY13A-610R-JCS	591	$488.00
RLY13A-613R-JCS	591	$488.00
RLY13A-616R-JCS	591	$488.00
ROF-413-SPO		$675.00
RS-3L-1-SFO	873	$2,073.00
RS-4S-SFO	873	$2,053.00
RS-5L-1-SFO	873	$2,808.00
RS-5S-1-SFO	873	$2,808.00
RSF-4811-T-SPO	281	$1,059.00
RSF-4813-T-SPO	281	$1,115.00
RSF-4817-T-SPO	281	$1,254.00
RSF-489-T-SPO	281	$1,021.00
RSF-9617-T-SPO	281	$1,567.00
RSF-9621-T-SPO	281	$1,804.00
RSF-9625-T-SPO	281	$2,181.00
RSL3-MAR	234	$15.80
RSL5-MAR	234	$29.40
RSS-495-011-SUP	681	$110.80
RT201BP-RFT	783	$68.60
RTS2-FAN	374	$73.60
RTS3-FAN	374	$129.80
RW0705-HUB	753	$0.60
RW1005-HUB	753	$0.70
RWS-C1030Q01-ECO	619	$190.70
S-10-SIG	850	$7.10
S-5180-HTT	368	$565.00
S-5181-HTT	368	$571.00
S-5182-HTT	368	$599.00
S-5185-HTT	368	$664.00
S-5187-HTT	368	$716.00
S-5188-HTT	368	$887.00
S-5190-HTT	368	$917.00
S-5192-HTT	368	$1,013.00
S-5202-HTT	368	$2,430.00
S-5203-HTT	368	$2,678.00
S-5290-HTT	368	$1,607.00
S-5292-HTT	368	$1,680.00
S-5294-HTT	368	$1,728.00
S-7004-MAR	724	$133.00
S-7471-AIR	724	$18.90
S-7481-AIR	724	$32.90
S-7482-AIR	724	$32.90
S-7491-ALL	724	$40.50
S-7492-ALL	724	$41.50
S-7493-AIR	724	$37.20
S-7494-AIR	724	$37.20
S-7551-ALL	724	$39.00
S-7571-AIR	724	$14.20
S-7572-AIR	724	$14.20
S-7581-AIR	724	$32.90
S-7582-AIR	724	$32.90
S-7591-AIR	724	$17.80
S-7593-AIR	724	$37.20
S-7594-AIR	724	$37.20
S-7801-MAR	717	$111.80
S-7802-MAR	717	$27.90
S-7804-MAR	717	$26.00
S-7805-MAR	717	$24.70
S-8-SUP	868	$34.20
S-8202-1-BUS	717	$13.30
S-8204-ALL	717	$13.20
S-8205-ALL	717	$1.90
S-8206-ALL	717	$21.10
S-8217-ALL	717	$92.30
S-OL-SPO	328	$135.30
S106-1A40-100-SUP	686	$224.10
S106-1A50-40C-SUP	686	$224.10
S106-1A55-60C-SUP	686	$224.10
S2-B-TCC	747	$19.70
S3-B-TCC	747	$21.40
S3-S-TCC	747	$19.30
S8610U3009-RES	661	$460.00
S9-M-TCC	748	$21.00
SA-12-SPO	286	$79.60
SA-12FM-SPO	286	$78.40
SA-12S-SPO	286	$75.80
SA-13FM-SPO	286	$79.50
SA-13FU-SPO	286	$114.80
SA-13S-SPO	286	$77.10
SA-13SU-SPO	286	$114.80
SA-13U-SPO	286	$108.30
SA-13UU-SPO	286	$119.20
SA-14-SPO	286	$96.10
SA-14FM-SPO	286	$95.60
SA-14FU-SPO	286	$137.50
SA-14S-SPO	286	$94.20
SA-14SU-SPO	286	$137.50
SA-14U-SPO	286	$133.60
SA-14UU-SPO	286	$143.80
SA-15-SPO	286	$99.40
SA-15S-SPO	286	$97.40
SA-15SU-SPO	286	$138.20
SA-15U-SPO	286	$130.40
SA-15UU-SPO	286	$159.40
SA-17S-SPO	286	$143.80
SA-19S-SPO	286	$156.20
SA-211-SPO	286	$308.00
SA-213-SPO	286	$372.00
SA-217-SPO	286	$445.00
SAFEGUARD-BINDER-SAG	918	$488.00
SAFEGUARD-REFILL-SAG	918	$507.00
SAFEGUARD-SAG	918	$995.00
SB41-B-ECO	617	$43.10
SBLHD-BRI	40	$183.80

PART #	PG	LIST
SBRHD-BRI	40	$147.30
SBSHD-BRI	40	$136.60
SBUHD-BRI	40	$168.00
SDMN5-FLP	903	$561.00
SDMN6-FLP	903	$1,066.00
SER-B-3/8X1/2-SPO		$1,002.00
SER-C-3/8X1/2-SPO		$1,002.00
SERI-J-1-1/8X1-3/8-SPO		$2,539.00
SERI-K-SPO		$3,155.00
SF-285-T-SPO	280	$216.60
SF-286-T-SPO	280	$230.70
SF-287-T-SPO	280	$226.20
SF-289-T-SPO	280	$244.10
SF-4811-T-SPO	280	$354.00
SF-4813-T-SPO	280	$388.00
SF-489-T-SPO	280	$365.00
SF-6417-T-SPO	280	$974.00
SFS-77-REC	551	$17.70
SH201-SUP	778	$47.20
SH202-SUP	778	$55.50
SH203-SUP	778	$61.30
SH207-SUP	778	$70.80
SH20M30B-FRI	397	$13,845.00
SH222-SUP	778	$30.70
SH224-SUP	778	$106.10
SH226-SUP	778	$61.30
SH250-SUP	776	$47.20
SH281-SUP	778	$84.90
SH282-SUP	778	$59.00
SH283-SUP	778	$75.50
SH284-SUP	778	$63.70
SH500-SUP	778	$51.90
SH502-SUP	778	$66.00
SH503-SUP	778	$54.30
SH504-SUP	778	$66.00
SH505-SUP	778	$73.10
SHA-100-ASE	204	$77.30
SHA-25-ASE	204	$77.30
SHA-250-ASE	204	$77.30
SHA-50-ASE	204	$77.30
SHB-200-ASE	204	$124.30
SHGB-15-0/75-SPO	303	$4,014.00
SHGBE-15-0/75-1-1/8-SPO	303	$3,653.00
SKZ050-HUB	753	$2.70
SL-300-REC	551	$2.70
SL243-SUP	690	$9.70
SL249-SUP	690	$9.70
SL300TH-SUP	884	$359.00
SM003-ALB	552	$82.10
SM480V-FLP	857	$2,434.00
SMG5-FLP	905	$479.00
SN8512-SND	824	$117.80
SP-120-CPD	888	$170.40
SP160-WHITE-CPD	888	$128.30
SPA1401AD-SUP	690	$23.60
SPE-BEZ5E-4CS-SPC	878	$498.00
SPE-EZ100E-CS-SPC	878	$423.00
SPE-EZ5E-CS-SPC	878	$58.80
SPE-GS2E-CS-SPC	878	$53.30
SPE-HVLEZE-SPC	878	$696.00
SPG1401GE-SUP	690	$23.60
SPK1-FLP	894	$110.50
SPK2-FLP	894	$121.90
SPK3-FLP	894	$363.00
SPP-4E-SUP	741	$81.40
SPP-5-SUP	741	$23.40
SPP-5E-SUP	741	$79.00
SPP-6-SUP	741	$32.80
SPP-6E-SUP	741	$82.60
SPP-7E-SUP	741	$102.60
SPP-7S-SUP	741	$70.50
SPP-8E-SUP	741	$113.00
SPP-9E-SUP	741	$136.60
SPP-SUP	741	$22.70
SQ050-HUB	753	$8.00
SQ90038-HUB	753	$6.90
SQ90050-HUB	753	$12.70
SRCCH-1-CHR	779	$179.40
SRCCH-2-CHR	779	$179.40
SRH-77A-CPD	893	$1,650.00
SS2-REC	556	$57.00
SS6S2-3.5-USL-230V-HYE	740	$1,376.00
SSWF7-HPG	819-820	$14.40
STW51-12P-CHR	777	$232.40
STW51-18P-CHR	777	$306.00
STW51-24P-CHR	777	$392.00
STW51-50P-CHR	777	$644.00
STW51-6P-CHR	777	$199.20
SW-6M3-DOU	356	$9,390.00
SW-7-1/2M2-1/2-DOU	356	$11,108.00
SW-7-1/2M3-3/4-DOU	356	$8,381.00
T-100-400-WRT	872	$1,081.00
T-100-ALL	851	$24.60
T-30-400-WRT	872	$317.00
T-400-ALL	851	$44.20
T-409-ALL	851	$13.00
T-417-ALL	851	$15.50
T-418-ALL	851	$16.10
T-50-400-WRT	872	$391.00
T-5800-1-JCS	574	$4,385.00
T-5800-3-JCS	574	$6,059.00
T1-10C-FAI	219	$20.90
T1-10D-FAI	219	$35.40
T1-4A-FAI	219	$6.20
T1-4C-FAI	219	$16.70
T1-6B-FAI	219	$8.60
T1-6C-FAI	219	$11.50
T1-8B-FAI	219	$22.20
T1-8C-FAI	219	$18.40
T1-8D-FAI	219	$21.20
T2-10-FAI	220	$13.60
T2-12-FAI	220	$58.20
T2-4-FAI	220	$5.40
T2-5-FAI	220	$11.40
T2-6-FAI	220	$6.40
T2-8-FAI	220	$10.30
T2-HKA-JBI	831	$37.90
T20351-JBI	851	$56.30
T20353-JBI	851	$54.00
T21125U-JBI	831	$76.70
T21294-JBI	850	$74.50
T26S-18-JCS	610	$434.00
T26T-3-JCS	610	$687.00
T3-4A-FAI	219	$7.90
T3-4B-FAI	219	$9.70
T3-6B-FAI	219	$10.90
T3-6C-FAI	219	$9.00
T30251-JBI	869	$389.00
T5-1000-FLU		$673.00
T5-600-FLU		$539.00
T6-1000-FLU		$1,236.00
T6-4-FAI	219	$14.00
T6-600-FLU		$841.00
T6031A1219-HON		$518.00
T6031A1235-HON		$763.00
T6217E1-ALL	41	$1,553.00
T6217E2-ALL	41	$1,552.00
T631A1162-HON		$716.00
T631B1070-HON		$858.00
T631C1020-HON		$853.00
T631C1103-HON		$841.00
T675A1524-HON		$833.00
T675A2068-HON		$1,159.00
T675A2084-HON		$1,303.00
T678A1155-HON		$1,368.00
T678A1163-OEM		$959.00
T678A1478-HON		$1,118.00
T7223G1-ALL	41	$3,350.00
T775-SENS-OAT-HON		$245.70
T775-SENS-WR-HON		$246.50
T775-SENS-WT-HON		$311.00
T775A2009-HON		$617.00
T775B2024-HON		$1,503.00
T775B2040-HON		$1,457.00
T775L2007-HON		$1,420.00
T775M2014-HON		$2,005.00
T775M2030-HON		$1,707.00
T775M2048-HON		$1,306.00
T775P2003-HON		$1,703.00
T775R2027-HON		$1,387.00
T775R2035-HON		$1,191.00
T775S2008-HON		$417.00
T775U2006-HON		$1,306.00
T775U2016-HON		$1,425.00
T87K1015-RES	638	$183.30
T87N1018-RES	638	$302.00
T991A1012-HON		$2,088.00
T991A1061-HON		$2,028.00
T991A1194-HON		$2,187.00
T991A1244-HON		$1,855.00
T991A1350-HON		$1,414.00
T991A1426-HON		$1,855.00
T991A1756-HON		$1,283.00
T991A1764-HON		$2,076.00
TA-1-SPO	866	$73.40
TA-2-SUP	885	$302.00
TA-22-SUP	885	$527.00
TA-2C-SUP	885	$326.00
TA-33-SUP	885	$551.00
TA-6C-SUP	886	$460.00
TA7-SUP	886	$143.50
TACH20-FLU	902	$2,118.00
TAS130-WIN	889	$120.40
TAS131-WIN	889	$120.40
TAS132-WIN	889	$120.40
TAS134-WIN	889	$120.40
TAS140-WIN	889	$142.60
TAS141-WIN	889	$142.60
TAS142-WIN	889	$142.60
TAS143-WIN	889	$142.60
TC-007-ALL	753	$689.00
TC900E-POWER-ECO	617	$318.00
TC900EL-POWER-ECO	617	$318.00
TC940RI-ECO	617	$318.00
TC940RIL-ECO	617	$318.00
TEA-2412-BRA	223	$3.80
TEA-2416-ALL	223	$17.00
TEA-2424-ALL	223	$18.30
TEB-2416-ALL	223	$12.20
TEB-2420-BRA	223	$5.60
TEFLON-TAPE-UNA		$1.40
TF500-T500-TRA	230	$130.10
TG-ALL	636	$157.50
TG2-ALL	636	$107.60
TG5-ALL	636	$56.10
TG510A1001-RES	637	$98.50

PART #	PG	LIST
TG511A1000-RES	637	$102.30
TG512A1009-RES	637	$106.10
TG6-ALL	636	$65.40
TG9-ALL	636	$105.10
TH8320R1003/U-EXE-HON		$745.00
THA5-NUA	369	$200.20
THP2-SUP		$85.90
THPXL-NFL	873	$120.00
THSP2C-NFL	873	$101.60
THWD-3-FLU	893	$751.00
TI33RILPLUS-ECO	617	$394.00
TIM100A-WIN	889	$286.90
TIM101A-WIN	889	$286.90
TIM102A-WIN	889	$286.90
TIM103A-WIN	889	$286.90
TIM105A-WIN	889	$286.90
TL175-FLU		$150.40
TL220-FLU		$360.00
TL221-FLU		$143.80
TL222-FLU		$143.80
TL223-FLU		$360.00
TL224-FLU		$143.80
TL360W-ALL	756	$91.70
TL71-FLU		$143.80
TL76-FLU		$171.60
TL81A-FLU		$709.00
TM99A-NIST-CPD	898	$919.00
TMA10A-FLU	902	$1,279.00
TP1-FLU		$98.10
TP175-FLU		$150.40
TP220-FLU		$104.60
TP80-FLU		$173.20
TPA-24-ALL	223,226	$4.50
TPAK-FLU	911	$179.80
TR2-68-FAI	220	$15.50
TR40-CO2-HON		$1,071.00
TR40-H-CO2-HON		$1,086.00
TR610-TOO	891	$8.40
TR614-TOO	891	$13.10
TRA-2416-ALL	223	$6.20
TRH122M-CPD	893	$259.10
TSD9ITSD-WIN	889	$444.00
TSD9ITSD6-WIN	889	$532.00
TSDK41CK-EDG	915	$132.10
TT-120-ALL	753	$47.60
TT-24-ALL	753	$69.40
TT-240-ALL	753	$75.40
TTB-161616-BRA	223	$3.60
TTD402-WIN	889	$147.20
TTD403-WIN	889	$162.70
TTD404-WIN	889	$75.30
TW-GFI-CS-CHR	777	$265.70
TW6-1C-CHR	777	$14.10
TW6-1CR-CHR	777	$17.00
TW6-2C-CHR	777	$14.80
TW6-2CR-CHR	777	$19.30
TXR-XL416CF-EDG	915	$103.60
TXRAP418-EDG		$99.00
TZMGLN-APP	874	$136.10
U065NA1-MAR	749	$89.10
U1-10C-FAI	217	$7.20
U1-10D-FAI	217	$7.60
U1-10E-FAI	217	$9.10
U1-12D-FAI	217	$12.40
U1-12E-FAI	217	$12.40
U1-3A-FAI	217	$2.00
U1-4A-FAI	217	$1.80
U1-4B-FAI	217	$2.50
U1-4C-FAI	217	$3.40
U1-4D-FAI		$6.40
U1-5A-FAI	217	$2.30
U1-5B-FAI		$2.90
U1-5C-FAI	217	$6.30
U1-6A-FAI	217	$2.90
U1-6B-FAI		$3.10
U1-6C-FAI	217	$3.70
U1-6D-FAI	217	$5.60
U1-8B-FAI	217	$4.50
U1-8C-FAI	217	$5.20
U1-8D-FAI	217	$4.90
U1-8E-FAI	217	$9.60
U2-10-FAI	217	$8.40
U2-12-FAI	217	$17.60
U2-3-FAI	217	$5.60
U2-4-FAI	217	$2.00
U2-5-FAI	217	$3.80
U2-6-FAI	217	$4.30
U2-8-FAI	217	$4.80
U3-10C-FAI	218	$12.10
U3-10D-FAI	218	$9.30
U3-10E-FAI	218	$12.00
U3-4A-FAI	218	$2.30
U3-4B-FAI	218	$2.90
U3-4C-FAI	218	$8.20
U3-6A-FAI	218	$3.10
U3-6B-FAI	218	$3.80
U3-6C-FAI	218	$4.70
U3-6D-FAI	218	$7.20
U3-8C-FAI	218	$5.40
U3-8D-FAI	218	$8.80
U4-4-FAI	218	$10.00
U7006-ALL	875	$2,043.00
UB567-RBM	706	$164.60
UB569-RBM	706	$164.60
UB570-RBM		$337.00
UB581-RBM	706	$372.00
UC2424-3-ALL	552	$119.60
UC3030-3-ALL	552	$179.20
UC3036-3-ALL	552	$188.90
UC3232-3-ALL	552	$200.80
UC3237-3-ALL	552	$191.90
UC3648-3-ALL	552	$289.70
UH1026V1-RBM	707	$756.00
UMSR50-ALL	744	$146.30
UR2-106-FAI	217	$10.10
URCO210-SUP	742-743	$51.90
URCO410-SUP	742-743	$42.40
URCO810-SUP	742-743	$42.40
URSC10-SUP	742	$44.80
URSC20-SUP	742	$42.40
US4-10-FAI	218	$13.70
US4-4-FAI	218	$10.20
US4-5-FAI	218	$15.00
US4-6-FAI	218	$10.80
US4-8-FAI	218	$13.70
USC-FRI	400	$545.00
V-3000-1-JCS	573	$408.00
V-3000-6000-JCS	573	$144.00
V-9502-15-OEM	573	$669.00
V-9502-600-JCS	572	$411.00
V03FT-ALA	357	$78.90
V04ST-PWR	357	$205.60
V09ST-PWR	357	$246.80
V1-406060-270-RSW	633	$214.90
V1-408060-170-RSW	633	$182.20
V10-414080-170-RSW	633	$697.00
V10-414140-470-RSW	633	$413.00
V10-418140-170-RSW	633	$760.00
V11HAA-115-JCS	573	$1,045.00
V11HBA-100-JCS	573	$1,028.00
V11HGA-100-JCS	573	$1,108.00
V12-4220T0-270-RSW	633	$1,423.00
V1212-EXA	772	$14.90
V2-408060-170-RSW	633	$214.90
V2-408060-270-RSW	633	$238.30
V2-4100F0-370-RSW	633	$238.30
V246GA1-001C-JCS	612	$850.00
V246GB1-001-JCS	612	$924.00
V246GC1-001-JCS	612	$1,057.00
V246GD1-001-JCS	612	$1,710.00
V246GE1-001-JCS	612	$1,993.00
V246GR1-001C-JCS	612	$2,465.00
V248GC1-001C-JCS	612	$1,657.00
V3-410080-770-RSW	633	$191.50
V3-412080-870-RSW	633	$265.20
V46AA-1-JCS	613	$620.00
V46AB-1-JCS	613	$674.00
V46AC-1-JCS	613	$813.00
V46AD-1-JCS	613	$1,710.00
V46AE-1-JCS	613	$1,995.00
V46AR-1-JCS	613	$2,467.00
V46AS-1-JCS	613	$3,584.00
V46AS-2-JCS	613	$3,366.00
V46AT-1-JCS	613	$4,911.00
V46AT-2-JCS	613	$4,911.00
V46BB-2-JCS	613	$1,288.00
V46BC-2-JCS	613	$1,751.00
V46BD-2-JCS	613	$2,880.00
V46BE-2-JCS	613	$3,588.00
V46BT-4-JCS	613	$10,130.00
V46NC-1-OEM	614	$743.00
V47AA-1-JCS	614	$1,649.00
V47AA-2-JCS	614	$1,792.00
V47AA-3-JCS	614	$1,683.00
V47AB-3-JCS	614	$1,756.00
V47AB-5-JCS	614	$1,790.00
V47AC-3-JCS	614	$1,881.00
V47AC-4-JCS	614	$1,881.00
V47AC-6-JCS	614	$1,913.00
V47AD-1-JCS	614	$2,923.00
V47AD-2-JCS	614	$2,834.00
V47AD-3-JCS	614	$2,834.00
V47AE-2C-JCS	614	$3,055.00
V47AR-1-JCS	614	$3,654.00
V47AR-2-JCS	614	$3,566.00
V47AT-3-JCS	614	$6,355.00
V48AB-2-JCS	615	$1,356.00
V48AC-2-JCS	615	$1,470.00
V48AD-2-JCS	615	$2,863.00
V48AE-2-JCS	615	$2,937.00
V48AF-2-JCS	615	$4,479.00
V5858-EXA	772	$18.40
V6-412080-170-RSW	633	$388.00
V6-414080-170-RSW	633	$350.00
V6-414120-170-RSW	633	$350.00
V8043A1011/U-RES	663	$332.00
V8043D1080-RES	663	$393.00
V8043D1205-RES	663	$342.00
V8043G1018-RES	663	$340.00
V8043J1037-RES	663	$434.00
VA-24-JBI	235	$10.60

PART #	PG	LIST
VA-34-JBI	235	$6.00
VA-46-JBI	235	$5.20
VA-58-JBI	235	$31.00
VA3-346-JBI	235	$4.90
VAS-012-ECO	238	$37.50
VAS-014-ECO	238	$32.40
VAS-034-ECO	238	$54.80
VAS-038-ECO	238	$35.10
VAS-058-ECO	238	$41.00
VAS-078-ECO	238	$57.80
VAS-118-ECO	238	$76.40
VAS-138-ECO	238	$108.10
VAS-158-ECO	238	$139.90
VAS-258-ECO	238	$396.00
VAS-318-ECO	238	$636.00
VAS-358-ECO	238	$832.00
VAS-418-ECO	238	$971.00
VAU-24-JBI	235	$5.40
VAU-45-JBI	235	$6.00
VAX-2-JBI	235	$6.10
VAX-3-JBI	235	$6.30
VAX-4-JBI	235	$6.30
VAX-5-JBI	235	$6.50
VAX-6-JBI	235	$6.60
VAX-8-JBI	235	$17.00
VB11-RSW	628	$85.10
VB7-RSW	628	$43.90
VC1-RSW	628	$45.30
VE-2-JBI	235	$12.80
VF3-RSW	628	$43.90
VHA12K50RTP-FRI	406	$7,694.00
VPAL2-FRI	405	$671.00
VPASA1-FRI	405	$1,107.00
VPAWP1-14-FRI	405	$924.00
VPAWP1-8-FRI	405	$775.00
VPDP1-FRI	405	$296.30
VPP-OT-LC-VET		$865.00
VPP-TECH-LC-VET	825	$825.00
VPP-TECH-PAC-1-VET		$1,195.00
VPP-TECH-XL-VET	825	$918.00
VPP-TP3B-VET		$252.00
VPP-TP4-VET		$299.30
VPP-XXL-F-VET	825	$944.00
VPRG4-FRI	405	$1,002.00
VPS-210AH-BPT	727	$141.70
VPS-212AH-BPT	727	$137.60
VPS-216AH-BPT	727	$149.30
VPS-218AH-BPT	727	$348.00
VPS-219AH-BPT	727	$176.60
VPS-223AH-BPT	727	$208.00
VPSC2-FRI	405	$819.00
VR-514T-MAD	806	$181.90
VR8200A2124-RES	660	$461.00
VR8200A2322-RES	660	$537.00
VR8245M2530-RES	659	$483.00
VR8300A4508-RES	659	$536.00
VR8304H4503-RES	659	$828.00
VR8304M4515-RES	659	$892.00
VR8304P4504-RES	659	$869.00
VR8345M4302-RES	660	$516.00
VS-4-JBI	235	$14.40
VST-4-JBI	236	$16.60
VST-44-JBI	236	$16.80
VT-1-FAI	227	$5.10
VT-1/4-FAI	227	$0.90
VT-1/8-FAI	227	$0.60
VT-24-JBI	236	$22.10
VT-3/16-FAI	227	$1.40
VT-3/4-FAI	227	$4.40
VT-3/8-FAI	227	$2.60
VT-5/8-FAI	227	$3.60
VT-7/8-FAI	227	$9.50
VT9-RSW	628	$43.90
VTR-24-JBI	236	$14.40
VTS-10-JBI	236	$25.10
VTS-12-JBI	236	$33.30
VTS-14-JBI	236	$38.60
VTS-46-JBI	236	$13.30
VTS-56-JBI	236	$20.80
VTS-68-JBI	236	$17.80
VTS3-10-JBI	236	$73.10
VTS3-12-JBI	236	$74.60
VTS3-14-JBI	236	$74.10
VTS3-18-JBI	236	$96.70
VU-4-JBI	236	$12.70
VUR-4-JBI	236	$17.50
VWR-1203GLWQ1-ECO	619	$476.00
VWR-1504GLWQ1-ECO	619	$550.00
VWR-2006GLWQ1-ECO	619	$627.00
W1000-CFT	212	$4.20
W1001-CFT	212	$1.80
W1003-CFT	212	$1.80
W1009-CFT	212	$1.60
W1010-CFT	213	$9.60
W10100-CFT	212	$147.50
W10101-CFT	213	$299.20
W10107-CFT	212	$178.70
W10108-CFT	213	$417.00
W10109-CFT	213	$358.00
W1011-CFT	213	$9.10
W10110-CFT	213	$406.00
W10111-CFT	213	$383.00
W1017-CFT	212	$1.90
W1019-CFT	213	$3.30
W1021-CFT	213	$4.40
W1022-CFT	212	$1.50
W1023-CFT	213	$3.20
W1025-CFT	213	$3.90
W1027-CFT	213	$4.20
W1028-CFT	212	$4.60
W1029-CFT	213	$7.80
W1030-CFT	213	$9.70
W1031-CFT	213	$8.00
W1034-CFT	212	$3.00
W1035-CFT	213	$5.50
W1036-CFT	213	$5.20
W1037-CFT	213	$6.90
W1038-CFT	213	$6.80
W1047-CFT	212	$6.60
W1049-CFT	213	$10.10
W1050-CFT	213	$10.80
W1051-CFT	213	$12.00
W1052-CFT	213	$11.60
W1055-CFT	212	$10.90
W1056-CFT	213	$14.20
W1058-CFT	213	$14.20
W1060-CFT	213	$13.60
W1063-CFT	212	$14.40
W1064-CFT	213	$23.50
W1065-CFT	213	$23.50
W1069-CFT	213	$23.50
W1073-CFT	213	$36.40
W1074-CFT	213	$36.40
W1075-CFT	213	$38.40
W1077-CFT	213	$75.60
W1079-CFT	213	$45.50
W1082-CFT	212	$54.30
W1083-CFT	213	$80.50
W1084-CFT	213	$82.20
W1085-CFT	213	$92.90
W1086-CFT	213	$93.50
W1092-CFT	212	$78.60
W1093-CFT	213	$105.90
W1094-CFT	213	$103.80
W1095-CFT	213	$342.00
W1106-CFT	215	$42.30
W1107-CFT	215	$45.20
W1113-CFT	215	$11.60
W1114-CFT	215	$44.80
W1115-CFT	215	$8.80
W1116-CFT	215	$30.60
W1123-CFT	215	$35.60
W1124-CFT	215	$14.20
W1125-CFT	215	$10.50
W1126-CFT	215	$47.00
W1130-CFT	215	$12.40
W1131-CFT	215	$4.20
W1132-CFT	215	$10.80
W1133-CFT	215	$26.60
W1138-CFT	215	$15.90
W1139-CFT	215	$22.20
W1145-CFT	215	$25.20
W1146-CFT	215	$7.10
W1147-CFT	215	$12.40
W1150-CFT	215	$597.00
W1161-CFT	215	$148.80
W1162-CFT	215	$79.80
W1163-CFT	215	$17.50
W1164-CFT	215	$27.20
W1165-CFT	215	$68.60
W1170-CFT	215	$126.20
W1171-CFT	215	$27.20
W1172-CFT	215	$40.60
W1173-CFT	215	$93.70
W1178-CFT	215	$236.10
W1179-CFT	215	$31.20
W1180-CFT	215	$126.40
W1181-CFT	215	$150.00
W1187-CFT	215	$52.90
W1188-CFT	215	$122.30
W1196-CFT	215	$127.20
W1199-CFT	215	$286.50
W1204-CFT	215	$26.80
W1205-CFT	215	$11.70
W1206-CFT	215	$4.60
W1207-CFT	215	$14.30
W1214-CBS	215	$26.60
W1215-CFT	215	$12.30
W1216-CFT	215	$33.90
W1223-CFT	215	$30.40
W1224-CFT	215	$13.70
W1225-CFT	215	$14.10
W1230-CFT	215	$13.60
W1231-CFT	215	$6.40
W1233-CFT	215	$21.30
W1238-CFT	215	$15.90
W1239-CBS	215	$137.90
W1245-CFT	215	$29.00
W1246-CFT	215	$8.70
W1247-CFT	215	$14.60
W1263-CFT	215	$21.30
W1264-CBS	215	$30.90
W1265-CFT	215	$78.50
W1271-CFT	215	$28.70
W1272-CFT	215	$131.60
W1278-CFT	215	$247.60
W1279-CFT	215	$48.90
W1280-CFT	215	$144.80
W1287-CFT	215	$60.80
W1296-CFT	215	$442.00

PART #	PG	LIST	PART #	PG	LIST	PART #	PG	LIST	PART #	PG	LIST
W1297-CFT	215	$623.00	W19P2-SPO	296	$1,278.00	W25P2-SPO	296	$1,976.00	W4008-CFT	216	$17.10
W1306-CFT	213	$4.30	W2003-CFT	212	$6.00	W2710-CFT	212	$11.20	W40100-CFT	216	$190.20
W1312-CFT	213	$4.50	W2009-CFT	212	$5.80	W2715-CFT	212	$10.90	W40102-CFT	216	$84.70
W1314-CFT	213	$5.50	W2011-CFT	214	$16.70	W2716-CFT	212	$8.60	W40110-NDL	216	$104.10
W1315-CFT	213	$3.60	W2017-CFT	212	$6.00	W2717-CFT	212	$11.40	W4012-CFT	216	$20.40
W1317-CFT	213	$4.00	W2019-CFT	214	$22.30	W2722-CFT	212	$4.80	W40123-CFT	216	$171.00
W1320-CFT	213	$8.70	W2022-CFT	212	$6.80	W2728-CFT	212	$7.80	W4013-CBS	216	$173.20
W1321-CFT	213	$8.80	W2023-CFT	214	$15.60	W2734-CFT	212	$11.40	W4014-CFT	216	$21.00
W1325-CFT	213	$5.50	W2025-CFT	214	$29.30	W2747-CFT	212	$20.20	W4015-NDL	216	$17.90
W1326-CFT	213	$5.20	W2028-CFT	212	$11.20	W2809-CFT	212	$9.90	W40152-CFT	216	$260.90
W1327-CFT	213	$7.20	W2029-CFT	214	$37.70	W2817-CFT	212	$18.90	W4016-NDL	216	$24.00
W1328-CFT	213	$10.20	W2034-CFT	212	$12.20	W2822-CFT	212	$7.20	W4017-CFT	216	$22.30
W1337-CFT	213	$8.40	W2035-CFT	214	$26.40	W2828-CFT	212	$8.70	W4018-CFT	216	$80.00
W1338-CFT	213	$10.20	W2036-CFT	214	$23.80	W2834-CFT	212	$14.90	W4019-CFT	216	$34.20
W1339-CFT	213	$11.00	W2037-CFT	214	$30.60	W2847-CFT	212	$28.90	W40190-CFT	216	$756.00
W1340-CFT	213	$10.40	W2047-CFT	212	$16.40	W3005-CFT	214	$15.20	W40200-CFT	216	$1,025.00
W1343-CFT	213	$15.50	W2049-CBS	214	$406.00	W3012-CFT	214	$10.90	W4021-CFT	216	$82.70
W1345-CFT	213	$15.50	W2055-CFT	212	$32.30	W3021-CFT	214	$9.70	W4022-CFT	216	$80.80
W1347-CFT	213	$15.50	W2056-CFT	214	$108.50	W3026-CFT	214	$3.50	W40230-CFT	216	$42.60
W1350-CFT	213	$20.20	W2063-CFT	212	$43.30	W3030-CFT	214	$16.80	W40232-CFT	216	$41.30
W1351-CFT	213	$20.20	W2072-CFT	212	$113.90	W3034-CFT	214	$6.20	W4027-CFT	216	$87.00
W1353-CFT	213	$20.20	W2078-CFT	214	$164.60	W3044-CFT	214	$15.50	W40302-CFT	216	$16.90
W1355-CFT	213	$20.20	W2082-CFT	212	$180.30	W3050-CFT	214	$22.10	W40306-CFT	216	$11.50
W1358-CFT	213	$38.10	W2084-CFT	212	$18.10	W3055-CFT	214	$26.60	W4031-CFT	216	$8.30
W1359-CFT	213	$38.10	W2086-CFT	212	$45.50	W3059-CFT	214	$44.50	W40313-CFT	216	$6.70
W1360-CFT	213	$40.10	W2087-CFT	212	$95.90	W3063-CFT	214	$94.80	W4032-CFT	216	$21.10
W1362-CFT	213	$37.30	W2088-CFT	212	$128.20	W3067-CFT	214	$140.60	W40324-CFT	216	$19.70
W1364-CFT	213	$40.00	W2089-CFT	212	$448.00	W3070-CFT	214	$466.00	W4033-CFT	216	$8.00
W1367-CFT	213	$75.80	W2090-CFT	212	$328.00	W3073-CFT	214	$480.00	W40330-CFT	216	$31.60
W1368-CFT	213	$77.40	W2092-CFT	212	$254.00	W3312-CFT	214	$16.90	W40332-CFT	216	$59.70
W1369-CFT	213	$72.50	W2093-CFT	212	$810.00	W3321-CFT	214	$13.30	W40334-CFT	216	$88.10
W1370-CFT	213	$80.90	W2095-CFT	212	$663.00	W3326-CFT	214	$4.00	W4034-CFT	216	$13.80
W1376-CFT	213	$97.30	W2097-CFT	212	$3,278.00	W3330-CFT	214	$25.50	W4035-CFT	216	$11.40
W1377-CFT	213	$95.10	W2305-CFT	212	$10.30	W3334-CFT	214	$6.20	W40364-CFT	216	$86.50
W1378-CFT	213	$179.60	W2312-CFT	212	$10.20	W3344-CFT	214	$21.60	W40366-CFT	216	$80.00
W1379-CFT	213	$89.90	W2321-CFT	212	$7.70	W3350-CFT	214	$27.20	W40368-CFT	216	$35.20
W1381-CFT	213	$138.50	W2326-CFT	212	$8.60	W3355-CFT	214	$33.30	W4037-CFT	216	$21.10
W1382-CFT	213	$230.50	W2330-CFT	212	$11.50	W3359-CFT	214	$52.90	W40400-CFT	216	$3,192.00
W1383-CFT	213	$138.50	W2334-CFT	212	$14.00	W3363-CFT	214	$226.70	W4041-CFT	216	$18.60
W1386-CFT	213	$322.00	W2344-CFT	212	$16.90	W3368-CFT	214	$337.00	W4043-CFT	216	$9.80
W1387-CFT	213	$204.70	W2350-CFT	212	$42.70	W3373-CFT	214	$692.00	W4044-CFT	216	$16.60
W1388-CFT		$212.80	W2355-CFT	212	$59.40	W3626-CFT	214	$59.30	W4047-CFT	216	$16.10
W1389-CFT	213	$362.00	W2359-CFT	212	$96.90	W3634-CFT	214	$66.60	W4048-CFT	216	$24.50
W1431-CFT	215	$37.80	W2363-CFT	212	$186.80	W3644-CFT	214	$66.40	W4049-CFT	216	$25.90
W1446-CFT	215	$48.30	W2368-CFT	212	$299.80	W3P1-SPO	296	$308.00	W4050-CFT	216	$88.80
W1463-CFT	215	$62.20	W2384-CFT	212	$25.70	W4000-CFT	216	$12.20	W4051-CFT	216	$30.00
W1464-CFT	215	$105.00	W2385-CFT	212	$33.70	W4001-CFT	216	$10.30	W4052-CFT	216	$61.00
W1487-CFT	215	$374.00	W2387-CFT	212	$125.30	W4002-CFT	216	$18.40	W4056-CFT	216	$30.80
W14P2-SPO	296	$868.00	W2388-CFT	212	$369.00	W4003-CFT	216	$65.10	W4058-CFT	216	$61.50
W1531-CFT	215	$27.10	W2389-CFT	212	$1,423.00	W4004-CFT	216	$28.70	W4061-CFT	216	$29.00
W1532-CFT	215	$37.00	W2390-CFT	212	$798.00	W4005-CFT	216	$27.70	W4065-CFT	216	$25.80
W1546-CFT	215	$34.60	W2393-CFT	212	$907.00	W4006-CFT	216	$3.70	W4068-CFT	216	$35.20
W1587-CFT	215	$172.00	W2395-CFT		$979.00	W4007-CFT	216	$17.80	W4084-CFT	216	$54.40

PART #	PG	LIST
W50-1000-SFS	767	$138.50
W60110-CFT	214	$65.70
W60121-CFT	214	$108.00
W60131-CFT	214	$135.60
W60140-CFT	214	$354.00
W6020-CFT	214	$17.40
W6032-CFT	214	$10.50
W6036-CFT	214	$23.40
W6041-CFT	214	$22.30
W6051-CFT	214	$38.70
W6053-CFT	214	$40.00
W6056-CFT	214	$32.60
W6058-CFT	214	$17.10
W6060-CFT	214	$36.60
W6062-CFT	214	$79.70
W6073-CFT	214	$92.20
W6074-CFT	214	$40.10
W6077-CFT	214	$84.20
W6092-CFT	214	$30.20
W6095-CFT	214	$42.20
W60999-CFT	216	$61.10
W61000-CFT	216	$68.00
W61001-CFT	216	$103.20
W61002-CFT	216	$187.70
W61003-CFT	216	$284.60
W61008-CFT	216	$91.10
W61009-CFT	216	$584.00
W6P1-SPO	296	$393.00
W7002-CFT	214	$2.90
W7004-CFT	214	$1.90
W7006-CFT	214	$3.00
W7007-CFT	214	$1.40
W7008-CFT	214	$3.60
W7009-CFT	214	$2.50
W7011-CFT	214	$5.80
W7012-CFT	214	$8.70
W7013-CFT	214	$12.70
W7014-CFT	214	$23.50
W7015-CFT	214	$75.10
W7016-CFT	214	$102.90
W7017-CFT	214	$644.00
W7018-CFT	214	$194.10
W7220A1000-HON		$1,023.00
W8001-CFT	214	$35.10
W8002-CFT	214	$47.40
W8003-CFT	214	$25.10
W8004-CFT	214	$30.00
W8005-CFT	214	$58.40
W88-1010-6000-SFS	770	$249.50
W88-2010-4-SFS	770	$107.50
WBB-300-REC	551	$185.20
WBB-500-REC	551	$280.80
WBF8530005-INS	207	$98.50
WBF8530006-INS	207	$303.00
WC15-FAN	374	$94.90
WIPING-RAG-CLC	790	$27.10
WJWL-0100-TAC-001-CPD	39	$13,501.00
WJWL-0151-CAV-001-CPD	39	$12,192.00
WJWL-A201-TAC-001-CPD	39	$19,128.00
WJWM-0300-TAC-001-CPD	38	$21,957.00
WS-1-ALL	556,886	$208.80
WSE-FRI	400	$532.00
X-PANDO-14-OZ-XPA	783	$50.50
X415-RCI		$524.00
X43-ORI-10-100/290-1-1/8-SPO		$2,334.00
X43-ORI-10-100/290-1-3/8-SPO		$2,334.00
XGE-4CC-7-ECO	618	$411.00
XGE-4MC7-ECO	618	$380.00
XGE-6CC-7-ECO	618	$411.00
XGE-6MC7-ECO	618	$380.00
XGE-AE01-ECO	618	$26.60
XR412-EDG	915	$43.40
XR416CF-EDG	915	$47.80
XR60CX-4N1F1-UR-CPD	616	$593.00
XR60CX-5N1F1-UR-CPD	616	$593.00
Y70AA-1C-BAS	621	$95.10
Y75AS-2H-BAS	621	$143.30
Y75BS-1H-BAS	621	$147.60
Y99AR-1H-BAS	621	$75.30
YCRL6438SR1000-HON		$1,630.00
ZA-1-WSM	819	$72.20
ZG-002-WSM	756	$112.20
ZG-003-WSM	756	$140.70
ZG-004-WSM	756	$112.80
ZO104KCE-TF5-969-CPD	64	$5,950.00
ZO21K5E-TFD-969-CPD	64	$4,447.00
ZO34K3E-TFD-969-CPD	64	$4,735.00
ZO45K3E-TF5-969-CPD	64	$4,927.00
ZO58K3E-TFD-969-CPD	64	$5,054.00
ZO88KCE-TF5-969-CPD	64	$5,822.00
ZOD104KCE-TFD-969-CPD	64	$6,910.00
ZOD34K3E-TFD-969-CPD	64	$6,014.00

NOTES

NOTES

NOTES

NOTES

NOTES

NOTES

NOTES

NOTES

NOTES

NOTES

EMERGENCY SERVICES

CALGARY (E) - (825) 807-6522

BALINT, Kelly
DRUMASHKO, Serhi
FLACH, Justin
HODGINS, Cliff
PANTEL, Ryan
PELLETIER, Marcus
TOKAR, Denys

CALGARY (N) - (403) 250-9866

CUNCANNON, Adam
STANG, Celina (Jo-Lee)
CHRYSLER, Ryan
GIBNEY, Michael
HILLMER, Ryan
HUNTER, Danny
JOHNSTON, Clint
NG, Eric
OLTSHER, Michael
PELLETIER, Aaron
PEREIRA, Carlos
PAWAR, Manveer
UMPHERSON, Paul

CALGARY (S) - (403) 243-8191

MCKENZIE, Bob
JOHNSTON, Colleen
ANTSYFEROV, Vasyl
BARTER, Andrew
CHMELYK, Kelsey
CORTEZ, Gerry
COULOURIS, Brad
DECOSTE, Bryan
DIMACALI, Randy
FLAHR, Dene
HERNANDEZ, Ismael
HILL, Nick
MACQUARRIE, Greg
MARTIN, EJ
MCCONKEY, Garrett
REED, Evan
REID, Evan
SHEARER, Justin
VASIUCHENKO, Yurii
WERY, Tim
YI, Brian

EDMONTON (N) - (780) 455-7755

DOLYNCHUK, Jason
BOVEE, Terence
BOYD, Don
CAMPBELL, Stephanie
CUTKNIFE, Keifer
DABBAS, Ramey
LARSEN, Hazel
MOLYNEAUX, Chris
OSADCHUK, Clifford
REDMOND, Lindsay
STANISKY, Steve
THEROUX, Louis
WATSON, Joseph
WICHART, Jamie

EDMONTON (S) - (780) 485-2121

TRASK, Tyler
THEROUX, Lianne
ADAMS, Carmen
BORGSTROM, Eric
CREDGEUR, Chris
DEPAOLI, Dante
FARRELL, Noah
GRANT, Rosie
HARKER, Cameron
LEASK, Amanda
MORISSETTE, Mikayla
NETZER, Jay
RICHARDSON, Jessica
WALSH, Dustin
WEAVING, Cameron

EDMONTON (W) - (587) 332-9940

HUTTON, Darren
BARKLEY, Cocheana
BUDD, Dean
ERHARDT, David
FINNIGAN, Brendan
KAYE, Mika
KENNY, Deirdre
MACDONALD, Heather
ROCH, Steven
RODWAY, Adam
SHERBETH, Zachary
SNOWDEN, Brent
WRIGHT, Daryn
YAKEMCHUK, Sayer

ABBOTSFORD - (778) 856-0580

MOTUT, Peter
BOURGEOIS, Rocky
FLINN, Matthew
GAUTHIER, Chantal
GEIGER, Trent
GILLESPIE, Craig
KLASSEN, Devin
WARD, Paul

BURNABY (N) - (604) 435-1313

DONNELLY, Steve
MARSHALL, Morgan
DUBOUZET, Arcel
HABERFELLNER, Richard
HO, Thuc Quyen
JALAKNATA, Akhilesh
KELLERMAN, Michelle
LEONG, David
MCDONNELL, Jeff
O'CONNOR, Ryan
SAJADI, Shahab
SANDEEPA, Naveen
SIMMONS, Nick
VELAYUDHAN, Shaq
ZEMECKAS, Vince

COMMERCIAL SALES - BC
(604) 454-5052

MITCHELL, Norman
BECKING, Brad
DALLA BENETTA, Loretta
MOHAR, Parm
STEPHEN DEWHURST, Cheyne

BURNABY (S) - (604) 454-5075

HYDE, Steve
JANDA, Harleen
MONTAGUE, Len
ANANTHARAMAN, Aakash
BROWNE, Neale
GROGAN, Adrian
HORNE, KC
KARTHIK, Visesh
LEAL, Samuel
LIGHTFOOT, Sean
NARDI, Joseph
NIGHTINGALE, Cole
RIVERSO, Sergio

COQUITLAM - (604) 944-0441

CAIRNS, Jared
DARMOFAL, Roksana
GAUTHIER, Richard
ALLAN, Owen
BRACKIN, Rammon
HUNG, Greg
TURNBULL, Warren
VAN DER HOEVER, Kirk
VARGAS, Fabio
ZAMPROGNO, Nicolas

KELOWNA - (250) 763-3114

GULEVICH, Glen
CHRISTIE, Matt
BARKER, Chris
BYRNE, Eddie
EARY, Tifani
GOUDRIAAN, Dustin
JEFFREY, Gord
KAISER, Lynsey
KREINER, Bronko
MALMBERG, Gage
MANDAU, Jason
ODEGARD, Tyler
SCHMIDT, Melissa
SHEETS, Daniel
TENSEN, Shayanne
THORICK, Josh
UMUKORO, Wilson

LANGLEY - (604) 539-2290

ROSE, Al
EDGAR, Kyne
GILBERT, Rylie
HOUGHTON, James
HU, Yi
INABA, Ryan
MCGONIGAL, Zachary
MONTS, Gary
POLAK, Jon
SILBERMAN, Marcel
TARLTON, Donna-Lee
WILSON, Robert

NANAIMO - (250) 758-7751

PILLIPOW, Dennis
STEPHEN, Colin
ARMSTRONG, Jaden
LOOI, Terrance
MEDFORTH, Raymond
PARKER, Andy
POFF, Rob
ROBINSON, Darcy
SIGALET, Greg
WELSHMAN, Ed

VANCOUVER - (604) 872-7521

REYNOLDS, Devan
BOCKUS, Cooper
CARTER, Cameron
CORREIA, Lucas
HUI, Wilson
JAVER, Nadeem
MACKENZIE, Clayton
RIDINGTON, Leif
URRUTIA, Raul
WILSON, Mark

Bold = Branch Manager, ***Bold Italic = Branch Supervisor***

EMERGENCY SERVICES

VICTORIA - (250) 475-6055

WEBER, Jeff
GREEN, Justin
SILVA, Kevin
ALLAN, William
BARKHOUSE, Joe
BELLINGHAM, Stephen
BOLTON, Kyle
CORTES, Pedro
HARWARDT, Patrick
LANNIGAN, Devin
LUNDQUIST, Jesse
POTGIETER, Susie
SAABEL, Chris
SEVIGNY, Aaron
VANDALE, Troy
WEBER, Shelley

REGINA - (306) 359-9797

SAUER, Marvin
HUNKO, Greg
ARNOLD, Leonard
FLEMING, Gord
GRUDNITZKI, Darcy
LOCKERIDGE, Dale
MANN, Tanya
PAUL, Jason
PROKOP, Dominyc
PURVES, Ryan
SWAYN-SHANNON, Dagan

SASKATOON - (306) 665-2206

TOWNSEND, Dallas
PERKINS, Keith
STEVENSON, Kevin
CLARK, Tim
HAUBRICH, Kevin
JOHNSON, Dalton
KLASSEN, Vern
LEECH, Robin
MISIWICH, Barrett
RUEHLEN, Blake
WALKER, Thomas

WINNIPEG - (204) 775-5887

MORIN, Marc
DOWNEY, Ryan
SHIELDS, Steven
BEILBY, Murray
BLAKEY, Marcus
CHEVREFILS, Joël
COTTERELL, Dale
COWAN, Zachary
DEBEER, Joey
GOMES, Nick
HASLER, Zack
HIXT, Jordan
JOHNSON, Jeff
KOOP, Jeremy
KULLMAN, Chris
MOORE, Regan
MORIN, Cameron
MOZEL, Mike
PENNER, Dale
ROGERS, Aidan
SANTA, Richard
SCAMMELL, Ronald
SHIELDS, Connor
SORBY, Jason
TERLETSKI, Robert
TRETHART, Nathan

DISTRIBUTION CENTRES

CENTRAL DISTRIBUTION CENTRE SOUTH BURNABY - (604) 454-5050

BAE, Sangjin
GIBSON, David
ASA, Armel
BILOUSOV, Denys
DA SILVA, Midyan
DE FIGUEIREDO, Marcio
ELLIS, Alex
FIGUEROA, Marlon
GARCIA, Juan
GOMES, Thatiana
HOPKINS, Heming
HSIEH, Andy
Kharel, Rahuk
LEVANDOSKI, Sandro
LIANG, Steven
MARDANYAN, Arnak
PATEL, Krupaliben
SHRESTHA, Gunjan
SINGH, Bhupinder
SINGH, Harshveer
SONIA, Sonia
THAM, Lien
TOBIN, Blaine
VASUDHA, Vasudha
VYKHRYSTENKO, Volodymyr

SOUTH SURREY - (604) 670-9043

CONIBEAR, Carson
KAUR, Gurminder
MUJKANOVIC, Mensur

CALGARY EAST - (403) 800-2151

KANE, Rebecca
BULLER, Kris
Quiambao, Mark
BOBRYKA, Ruslan
BORABON, Matthew
DONSKYI, Dmytro
DUBROVNA, Ivanna
DUDNIK, Milena
FSHATSION, Samuel
KHOZHYLO, Vladyslav
LIUBYI, Yurii
PAEZ, Ale
PONOMAROV, Oleksandr
RIABIIK, Mykola
SOPUN, Diana
SVEREDA, Valentyn
YANG, Guochang
ZOZULIAK, Sofiia

REGINA - (306) 522-1523

HOLLIDAY, Teshia
CHAKMA, Ronel
CHAUDHARY, Shahab
HACKETT, Nadine
HAO, Jason
JIANG, Yanfei
KAUR, Jasmeet
LUO, Alex
MACQUEEN, Nancy
ZERR, Landon

Bold = Branch Manager, ***Bold Italic = Branch Supervisor***